Paper 1

UNITED STATES PATENT AND TRADEMARK OFFICE

BEFORE THE PATENT TRIAL AND APPEAL BOARD

AT&T CORP., AT&T SERVICES, INC., and AT&T MOBILITY LLC

Petitioners,

v.

ALEXANDER I. SOTO and WALTER G. SOTO,

Patent Owners.

Case: IPR2024-00712
U.S. Patent No. 8,238,754

PETITION FOR INTER PARTES REVIEW

UNDER 35 U.S.C. §311-319 AND 37 C.F.R. §42.104

Mail Stop PATENT BOARD

Patent Trial and Appeal Board

US Patent and Trademark Office

PO Box 1450

Alexandria, Virginia 22313-1450

TABLE OF CONTENTS

I. STANDING UNDER 37 C.F.R. §42.104(a) 1

II. PAYMENT OF FEES 1

III. OVERVIEW OF CHALLENGES AND RELIEF REQUESTED 1

IV. BACKGROUND 2

A. Overview of the ’754 Patent 2

B. Technical Background 5

1. Passive Optical Networks 5

2. Pluggable Optical Transceiver Modules 5

3. Framing Protocols 6

4. Identification and Registration of ONTs/ONUs 6

5. Ranging and Accounting for Delay 7

C. ’754 Patent Prosecution History 7

D. Priority Date 8

E. Prior Decisions by District Courts and the Board 9

F. Claim Construction (37 C.F.R. §42.104(b)(3)) 10

V. PRIOR ART REFERENCES 11

A. U.S. Patent No. 6,697,374 (“Shraga”) 11

B. U.S. Patent No. 6,439,918 (“Togami”) 12

C. ITU-T Study Group 15, Temporary Recommendation 7, (“The G.984.3 Draft Recommendation”) and ITU-T Study Group 15, Contribution 104 (“Contribution 104”)[3] 14

1. Public Availability of the G.984.3 Draft Recommendation and Contribution 104 15

VI. LEVEL OF ORDINARY SKILL IN THE ART 18

VII. THE CHALLENGED CLAIMS ARE UNPATENTABLE.....18

A. Ground 1: Claims 1-16 and 18-30 are Unpatentable Under 35 U.S.C. §103 over Shraga in view of Togami 18

1. Motivation to Combine 18

2. Claim 1 22

3. Claim 2 34

4. Claim 3 35

5. Claim 4 38

6. Claim 5 38

7. Claim 6 38

8. Claim 7 39

9. Claim 8 40

10. Claim 9 42

11. Claim 10 43

12. Claim 11 45

13. Claim 12 45

14. Claim 13 46

15. Claim 14 47

16. Claim 15 50

17. Claim 16 51

18. Claim 18 52

19. Claim 19 57

20. Claim 20 57

21. Claim 21 57

22. Claim 22 58

23. Claim 23 58

24. Claim 24 58

25. Claim 25 58

26. Claim 26 58

27. Claim 27 59

28. Claim 28 59

29. Claim 29 59

30. Claim 30 59

B. Ground 2: Claims 1-16 and 18-30 are Unpatentable Under 35 U.S.C. §103 over Shraga and Togami in view of The G.984.3 Draft Recommendation and/or Contribution 104 60

1. Motivation to Combine 60

2. Claim 1 62

3. Claim 2 66

4. Claim 3 67

5. Claim 4 67

6. Claim 5 67

7. Claim 6 68

8. Claim 7 68

9. Claim 8 68

10. Claim 9 70

11. Claim 10 70

12. Claim 11 71

13. Claim 12 72

14. Claim 13 72

15. Claim 14 73

16. Claim 15 74

17. Claim 16 75

18. Claim 18 76

19. Claim 19 78

20. Claim 20 79

21. Claim 21 79

22. Claim 22 79

23. Claim 23 79

24. Claim 24 80

25. Claim 25 80

26. Claim 26 80

27. Claim 27 80

28. Claim 28 81

29. Claim 29 81

30. Claim 30 81

VIII. DISCRETIONARY ISSUES 81

A. The Petition Does Not Present the Same References Addressed in Prosecution 81

B. The Board Should Not Deny Institution Under Fintiv.....82

C. The Board Should Not Deny Institution Under General Plastic.....85

IX. CONCLUSION 86

X. MANDATORY NOTICES UNDER 37 C.F.R. §42.8.....87

A. Real Party in Interest (37 C.F.R. §42.8(b)(1)) 87

B. Related Matters (37 C.F.R. §42.8(b)(2)).....87

C. Designation of Counsel (37 C.F.R. §42.8(b)(3)) 88

D. Service Information (37 C.F.R. §42.8(b)(4)) 88

TABLE OF AUTHORITIES

Page(s)

CASES

Advanced Bionics, LLC v. MED-EL Elektromedizinische Geräte GmbH,
No. IPR2019-01469, Paper 6 (PTAB Feb. 13, 2020).....81

Apple v. Fintiv, Inc.,
IPR2020-00019, Paper 11 (PTAB Mar. 20, 2020).....82, 84

Comcast Cable Commn's, LLC v. Rovi Guides, Inc.,
IPR2019-00231, Paper 14 (PTAB May 20, 2019) 85

Code200, UAB v. Bright Data, Ltd.,
IPR2022-00861, Paper 18, 5-6 (PTAB Aug. 23, 2022) 86

Dish Network v. Broadband iTV,
IPR2020-01280, Paper 17 (PTAB Feb. 4, 2021).....83

GoPro, Inc. v. Contour IP Holding LLC,
908 F.3d 690 (Fed. Cir. 2018) 15, 17

NHK Spring Co. v. Intri-Plex Techs., Inc.,
IPR2018-00752, Paper 8 (PTAB Sept. 12, 2018).....82

Phillips v. AWH Corp.,
415 F.3d 1303 (Fed. Cir. 2005) 10

Sand Revolution II LLC v. Continental Intermodal Group-Trucking LLC,
IPR2019-01393, Paper 24 (PTAB June 16, 2020) 84, 85

VMWare, Inc. v. Intellectual Ventures I LLC,
No. IPR2020-00470, Paper 13 (PTAB Aug. 18, 2020).....82

STATUTES

35 U.S.C. §§102-103 9

35 U.S.C. §102(a) 14

35 U.S.C. §102(e) 11, 12

35 U.S.C. §103 ..... 1, 18, 59

35 U.S.C. §282(b) 10

35 U.S.C. §§311-319 1

35 U.S.C. §314(a) 82

35 U.S.C. §325(d) 81, 82

OTHER AUTHORITIES

37 C.F.R. §42 1

TABLE OF EXHIBITS

Exhibit	Short Name	Description
Ex. 1001	’754 Patent	U.S. Patent No. 8,238,754
Ex. 1002-1	’754 File History	File History of U.S. Patent No. 8,238,754
Ex. 1002-2	’514 File History	File History of U.S. Patent Application No. 60/886,514
Ex. 1003	Prucnal Declaration	Declaration of Dr. Paul Prucnal
Ex. 1004	Prucnal CV	*Curriculum Vitae* of Dr. Paul Prucnal
Ex. 1005	Shraga	U.S. Patent No. 6,697,374
Ex. 1006	Wood	U.S. Patent No. 7,088,921
Ex. 1007	Togami	U.S. Patent No. 6,439,918
Ex. 1008	Fujimori	U.S. Patent No. 7,206,366
Ex. 1009	Liu	U.S. Patent No. 6,005,694
Ex. 1010	Starr Declaration	Declaration of Thomas J. J. Starr
Ex. 1011-1	The G.984.3 Draft Recommendation	ITU-T Study Group 15, Temporary Document 7, Draft new Recommendation G.984.3 – Transmission Convergence Layer for Gigabit Passive Optical Networks
Ex. 1011-2	Contribution 104	ITU-T Study Group 15, Contribution 104, Draft new Recommendation G.984.3– Transmission Convergence Layer for Gigabit Passive Optical Networks
Ex. 1012	OKI Article	*SFF & SFP Optical Transceivers*, OKI Technical Review Issue 190, Vol. 69, No. 2 (April 2002)
Ex. 1013	Ramaswami	Rajiv Ramaswami & Kumar Sivarajan, *Optical Networks, A Practical Perspective* (2d ed. 2002)

Exhibit	Short Name	Description
Ex. 1014	Kramer IEEE	Glen Kramer & Gerry Pesavento, *Ethernet Passive Optical Network (EPON): Building a Next-Generation Optical Access Network*, IEEE Communications Magazine (February 2002)
Ex. 1015	Kazi	Khurram Kazi, *Optical Networking Standards, A Comprehensive Guide for Professionals* (2006)
Ex. 1016	SFP MSA	SFF Committee, INF-8074i Specification for SFP (Small Formfactor Pluggable) Transceiver, Rev. 1.0, May 12, 2001).
Ex. 1017	XFP MSA	10G small form-factor pluggable, XFP Revision 4.5 (initial publication March 2002)
Ex. 1018	XENPAK MSA	INF-8474i Specification for Xenpak 10 Gigabit Ethernet Transceiver, Rev. 3.0, September 18, 2002 (publicly announced March 12, 2001)
Ex. 1019	Kramer OSA	Glen Kramer, et al., *Supporting differentiated classes of service in Ethernet passive optical networks*, Journal of Optical Networking, Vol. 1, Nos. 8 & 9 (August & September 2002)
Ex. 1020	EC&M Article	Small Form Factor Connector Basics by Paul Rosenberg, EC&M.com (Sept. 1, 2001).
Ex. 1021	Going Serial Article	Going Serial in Gigabit Ethernet Designs by Martin Lund, EDN.com (June 20, 2002).
Ex. 1022	G.984.2	ITU-T G.984.2 (03/2003) Gigabit-capable Passive Optical Networks (GPON): Physical Media Dependent (PMD) layer specification
Ex. 1023	G.984.1	ITU-T G.984.1 (03/2003) Gigabit-capable Passive Optical Networks (GPON): General Characteristics
Ex. 1024	ITU-T A.1	ITU-T A.1 (10/2000) Work methods for study groups of the ITU Telecommunication Standardization Sector (ITU-T)

Exhibit	Short Name	Description
Ex. 1025	SG15 Contributions List	List of contributions from Oct. 2003 Geneva, Switzerland Meeting
Ex. 1026	SG15 TD-PLEN List	List of Plenary temporary documents from the Oct. 2003 Geneva, Switzerland Meeting
Ex. 1027	WP1 TD List	List of WP1 temporary documents from Oct. 2003 Geneva, Switzerland Meeting
Ex. 1028	WP1 TD5	Report of Q.2/15 Rapporteur meeting, 13-14 August 2003, Santa Clara, USA
Ex. 1029	TD-58GEN	List of participants at the Oct. 2003 Geneva, Switzerland
Ex. 1030	TD-7PLEN HTML	Webpage printout of The G.984.3 Draft Recommendation page
Ex. 1031	Contribution 104 HTML	Webpage printout of Contribution 104
Ex. 1032	DCO	Doc. No. 58, Docket Control Order, *NextGen Innovations, LLC v. Fujitsu Network Communications, Inc. et al.*, No. 2:22-cv-00307-JRG-RSP (E.D. Tex.) (consolidated cases)
Ex. 1033	Caseload	U.S. District Court – Judicial Caseload Profile (Sept. 2022)
Ex. 1034	Agilent New Fiber Optic Transceiver	*Agilent Technologies' New Fiber Optic Transceivers Offer Industry's Lowest EMI Emissions*, Agilent Technologies Inc. (July 10, 2001)
Ex. 1035	Nokia Claim Construction Order	Doc. No. 279, Claim Construction Order, *NextGen Innovations LLC v. Fujitsu Network Comm'ns, Inc., et al.*, No. 2:22-cv-0307-JRG-RSP (E.D. Tex. Dec. 22, 2023)
Ex. 1036	Nokia Intervention Motion	Dkt. No. 27, Nokia of America Corporation's Motion to Intervene, *NextGen Innovations, LLC v. AT&T Services, Inc., et al.*, No. 2:23-cv-00263-JRG-RSP (E.D. Tex.)
Ex. 1037	AT&T DCO	Doc. No. 23, Docket Control Order, *NextGen Innovations, LLC v. AT&T Services, Inc. et al.*, No. 2:23-cv-00263-JRG-ESP (E.D. Tex.)

Exhibit	Short Name	Description
Ex. 1038	Redline Comparison	Comparison of AT&T Petition in IPR2024-00712 to Nokia Petition in IPR2023-00960

AT&T Corp., AT&T Services, Inc., and AT&T Mobility LLC ("Petitioners" or "AT&T") petitions for *Inter Partes* Review ("IPR") under 35 U.S.C. §§311-319 and 37 C.F.R. §42 of Claims 1-16, 18-30 ("the Challenged Claims") of U.S. Patent No. 8,238,754 (the "'754 Patent"). Petitioners requests cancellation of the Challenged Claims.

I. STANDING UNDER 37 C.F.R. §42.104(a)

Petitioner certifies that the '754 Patent is available for IPR, and that Petitioner is not barred or estopped from requesting IPR.

II. PAYMENT OF FEES

Petitioner authorizes Account No. 50-1212 to be charged for any fees.

III. OVERVIEW OF CHALLENGES AND RELIEF REQUESTED

Pursuant to §42.22(a)(1) and §42.104(b)(1)-(2), Petitioner requests cancellation of the Challenged Claims pursuant to the grounds below. Additional support is provided in the Declaration of Dr. Paul Prucnal (Ex. 1003).

Ground 1: Claims 1-16 and 18-30 are unpatentable under 35 U.S.C. §103 over Shraga in view of Togami.

Ground 2: Claims 1-16 and 18-30 are unpatentable under 35 U.S.C. §103 over Shraga and Togami in view of The G.984.3 Draft Recommendation and/or Contribution 104.

IV. BACKGROUND

A. Overview of the ’754 Patent

As discussed *infra* Section IV.B.1, prior to the filing of the ’754 Patent, passive optical networks (“PONs”) were well-known by POSITAs and individuals involved in the telecommunications industry. The architecture of PONs and the methods by which they transmit and receive data were being standardized across the industry at, for example, meetings of the International Telecommunication Union. At least one of the inventors, Walter Soto, participated in these meetings and had access to documents related to the development and standardization of PONs, including documents authored by others that presented the ideas and even figures that he included, without citation, in the ’754 Patent. Ex. 1028; Ex. 1029.

At the same time, as discussed *infra* Section IV.B.2, pluggable form-factors were already well-known and had also been specified via various Multi-Source Agreements. The ’754 Patent appears to simply attempt to take the standard data communications concept of a PON, including the specific time slot concepts that *others* contributed to the ITU standardization process, and merely put the capabilities into already well-known and utilized pluggable form-factors.

The ’754 Patent describes and claims data communication over a PON using pluggable optical transceiver modules. Ex. 1001. Specifically, the ’754 Patent

describes a PON interconnecting a plurality of nodes that includes a first node (the head-end or network manager) and a plurality of remaining nodes (the network clients or optical network units (ONUs)). *Id.* at Abstract, Fig. 7C. The '754 Patent further discloses a control module connected to the head-end that controls the timing for each of the network clients to transmit signals over the PON. *Id.* The network manager transmits control frame messages to each of the plurality of ONUs on the PON for scheduling upstream transmission by the ONU. *Id.* at 8:60-9:18.

The '754 Patent further discloses an optical transceiver module having a form-factor and containing components capable of facilitating optical-to-electrical and electrical-to-optical conversion. *Id.* at 15. The PON optical transceiver module disclosed is configured to process and transmit signals according to an OSI layer-2 or OSI layer-3 protocol including Ethernet media access control (MAC). *Id.* at 2:31-42. Each transceiver module on the PON receives an allocated time slot from the head-end of the network, which corresponds to a time period to transmit data

upstream. *Id.* at 8:60-9:18.[1] During the allocated time slot, the transceiver has a dedicated transmission interval to transmit data to the head-end without a collision resulting with another transceiver's data. *Id.* The head-end allocates a time slot to each transceiver by sending a network communication that identifies the specific transceiver. *Id.*

As set forth in this Petition, however, the '754 Patent merely describes standard systems of data communications utilized in a PONs and well-known pluggable, standardized optical transceiver devices. Ex. 1003, ¶47. The Board should thus institute review because there is a strong likelihood that Petitioner will prevail on at least one Challenged Claim.

[1] As discussed *infra* Section IV.B, PONs operate by transmitting a single downstream signal to all client-side devices. In the upstream direction, each client-side device is allocated a specific number of time slots within a window in which that specific device is permitted to transmit its communication back to the head-end of the network.

B. Technical Background

1. Passive Optical Networks

Passive Optical Networks (PONs) are fiber-optic telecommunications networks that distribute a single signal to multiple branches, point-to-multipoint, through unpowered optical beam splitters. Ex. 1013, 603-604; Figure 11.7. PONs consist of a network-side interface at the main source, or head-end, called an Optical Line Termination (OLT) and a client-side interface at the endpoints, called Optical Network Terminations (ONTs) or Optical Network Units (ONUs). Ex. 1013, 2-3; Figure 6-1. To interface with user devices that operate on electrical signals, the fiber-optic network must have an opto-electrical interface that converts electrical signals to optical signals, and vice versa. Ex. 1003, ¶54.

2. Pluggable Optical Transceiver Modules

Optical transceiver modules convert between optical and electrical signals, using a transmitter and receiver, to allow for transmission between the electrical components and optical fibers of the network. *Id.* To facilitate ease of maintenance and replacement, developers began to develop smaller, hot-pluggable optical transceivers. To maintain compatibility across the industry, standard form-factors for these pluggable optical transceivers were developed under Multi-Source Agreements (MSA), such as the Small Form-factor Pluggable (SFP), 10G small

form-factor pluggable (XFP), and XENPAK. Ex. 1003, ¶¶58-65; Ex. 1015, 717-27; Ex. 1017; Ex. 1018. Upon investigation, it does not appear that the inventors were participants in the development and standardization of form-factors under these MSAs.

3. Framing Protocols

In a typical PON structure, downstream signal traffic is broadcast from the OLT to all of the ONTs/ONUs. Ex. 1013 at 603. Each ONT/ONU then processes the data destined to it by matching the address contained within the transmission protocol header. *Id.* In the upstream direction, the ONTs/ONUs share a combined channel and use a MAC protocol, utilizing time slots, to communicate back to the OLT. Ex. 1003, ¶67; Ex. 1013, 603-04; Ex. 1014, 70.

An OLT sends pointers in the frame header that indicate the time, or slot, at which each ONT/ONU may start and end its upstream transmission. Therefore, only one ONT/ONU can access the uplink medium at any time and collision of data can be avoided. Ex. 1003, ¶69; Ex. 1013, 18. Said another way, each ONT/ONU is allotted a specific time slot to use for data in the upstream direction.

4. Identification and Registration of ONTs/ONUs

For an ONT/ONU to receive the message destined for it, the OLT must possess the unique identification address of that ONT/ONU. Ex. 1003, ¶70. One

common method for an OLT to register ONTs/ONUs that are on the PON is to obtain their serial numbers during an "auto discovery" procedure. Ex. 1003, ¶71; Ex. 1013, §7.4.2. An OLT is permitted to send a request to an ONT/ONU to obtain its serial number while in the "Serial-Number" state. Ex. 1003, ¶72; Ex. 1013, §10.2.2.1. The OLT then assigns the ONT/ONU a unique address or "ONU-ID." *Id.*

5. Ranging and Accounting for Delay

To avoid collision of different ONT/ONUs' communications, all ONTs synchronize their transmission to a common clock through a process called ranging; each ONT/ONU measures its delay from the OLT and adjusts its clock to synchronize accordingly. Ex. 1003, ¶¶73-77; Ex. 1013, 604. This allows the OLT to transmit signals to the ONTs/ONUs that indicate permitted time slots for the ONTs/ONUs to transmit data communications back to the OLT, as discussed above in Section IV.B.3. *Id.*; Ex. 1014, 70; Ex. 1013, 18.

C. '754 Patent Prosecution History

Patent Owner filed Application No. 12/982,872 (the "'872 Application"), which resulted in the '754 Patent, on December 20, 2010 and was granted as a first-action allowance. Ex. 1002-1, 13-19. Examiner made no prior art rejections and stated in the Notice of Allowability that the subject application was allowable over U.S. Patent Publication No. 2002/0163921 to Ethridge et al. because of the

application's "electrical network interface port electrically coupled to the control module and for coupling into the optical module port of the switch or router." *Id.* at 18-19. In other words, the allowance was based on the fact that the PON data communication control functionalities were placed in a pluggable form-factor.

Much of the prosecution history of the '754 Patent lies in the history of its parent application, U.S. Patent Application No. 10/886,514 ("the '514 Application"). Ex. 1002-2. After multiple final rejections, applicants appealed to the Board, which then reversed. Ex. 1002-2, 42-45, 70-132. The Board stated that the PON disclosed in the primary reference, Wang et al. (U.S. Pub. No. 2004/0052274) ("Wang"), was an optical WAN and not an optical LAN, as the '514 Application claimed. *Id.* As discussed *infra* Section VIII.A., the references discussed in the Petition differ from previously disclosed references. *Id.* at ¶¶88-92.

D. Priority Date

On its face, the '754 Patent purports to claim the benefit of Provisional Application No. 60/515,836 (the "'836 Application"), filed on October 30, 2003, by way of a series of continuation applications. Petitioner does not believe that the '754

Patent can properly claim priority to this date.[2] But for purposes of this Petition, no determination as to intervening priority need be made; all the prior art relied upon herein is prior art to the earliest alleged priority date in 2003. Ex. 1001. All references herein to 35 U.S.C. §§102-103 are to the pre-AIA versions thereof, which apply to the Challenged Claims.

E. Prior Decisions by District Courts and the Board

The ’754 Patent was previously considered by the United States District Court for the Eastern District of Texas in *NextGen Innovations, LLC v. II-VI, Inc. et al.*, No. 4:20-cv-00854-SDJ (E.D. Tex.). The case was transferred to the Northern District of California, styled as *NextGen Innovations, LLC v. II-VI, Inc. et al.*, No. 4:21-cv-07477-YGR (N.D. Cal.), and was voluntarily dismissed before dispositive judgments and claim construction.

Along with pending *inter partes* review IPR2023-00960, the ’754 Patent is currently asserted in three pending district court cases in the Eastern District of

[2] During the prosecution of the ’754 Patent, Patent Owner added substantial new matter to the specification of the ’872 Application through a preliminary amendment on March 15, 2011, despite the application’s designation as a continuation and not a continuation-in-part. Ex. 1002-1, 33-51.

Texas: *NextGen Innovations, LLC v. AT&T Services, Inc. et al.*, No. 2:23-cv-00263 (E.D. Tex) ("the AT&T Litigation"); *NextGen Innovations, LLC v. Fujitsu Network Communications, Inc. et al.*, No. 2:22-cv-00307-JRG-RSP (E.D. Tex.); and *NextGen Innovations, LLC v. Nokia of America Corporation et al.*, No. 2:22-cv-00309-JRG-RSP (E.D. Tex.). A claim construction order has issued in the Nokia Litigation, holding that certain terms of the '754 Patent—"control module" (claims 1, 3-4, 8-14, 18, 20-21, 25-28), "framing block" (claim 8), and "bi-directional optical interface block" (claim 1)—are not means-plus-function terms. Ex. 1035, 20-37/43.

The '754 Patent was also previously the subject of an IPR in II-VI, Inc. v. Alexander Soto, et al., IPR2021-01495. Prior to an institution decision, the petition was voluntarily terminated. None of the prior art references used for invalidity in this Petition were used in the prior IPR, nor do any of the prior art references in this Petition share priority with any references used in the prior IPR.

F. Claim Construction (37 C.F.R. §42.104(b)(3))

The claims are construed herein "using the same claim construction standard that would be used to construe the claim in a civil action under 35 U.S.C. §282(b)." 37 C.F.R. §42.100(b) (Nov. 13, 2018). Unless otherwise specified, the terms should receive their respective plain and ordinary meaning as understood by a person of ordinary skill in the art under *Phillips v. AWH Corp.*, 415 F.3d 1303 (Fed. Cir. 2005).

V. PRIOR ART REFERENCES

A. U.S. Patent No. 6,697,374 ("Shraga")

Shraga was filed on December 5, 2001 and issued on February 24, 2004. Shraga qualifies as prior art under at least pre-AIA 35 U.S.C. §102(e). Shraga was not cited and was not considered during prosecution.

Shraga teaches a method for communication over a PON from a central-point to end-points by time division multiplexing of a sequence of frames divided into multiple timeslots. Ex. 1005, Abstract. Specifically, Shraga discloses an OLT (in yellow below), which transmits optical signals downstream to a plurality of ONTs (in red below), which are coupled via a passive optical distribution fabric (in blue below), forming a PON. Ex. 1005, 2:32-36.

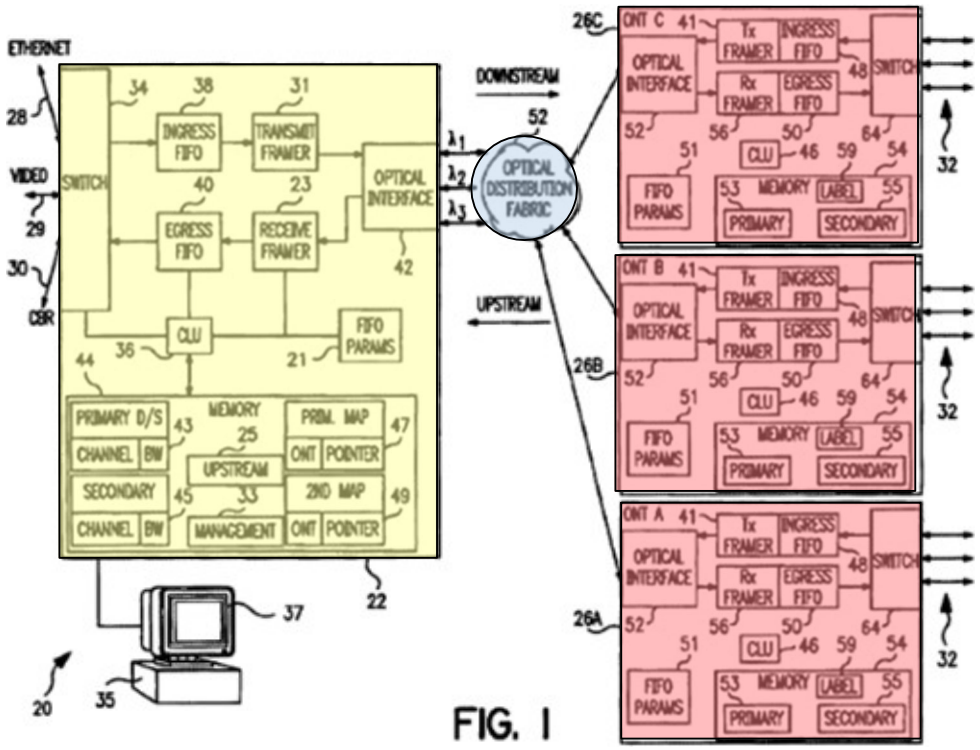

Ex. 1005, Fig. 1.

Shraga teaches the process of transmitting upstream and downstream signals across the PON. Ex. 1003, ¶89. The method taught in Shraga discloses that downstream signals are sent in the form of frames comprised of timeslots. *Id.*; Ex. 1005, 2:38-54. The OLT disclosed in Shraga allocates timeslots within which each ONT is permitted to transmit upstream signals. *Id.*

B. U.S. Patent No. 6,439,918 ("Togami")

Togami was filed on October 4, 2001 and issued on August 27, 2002. Togami qualifies as prior art under at least pre-AIA 35 U.S.C. §102(e). Togami was not cited and was not considered during prosecution.

Togami teaches an opto-electronic transceiver module, used to interface an optical transmission cable to a host device, formed as a small form-factor pluggable ("SFP") device in accordance with existing industry standards, such as the hot-pluggable MSA standard. Ex. 1007, 2:45-62.

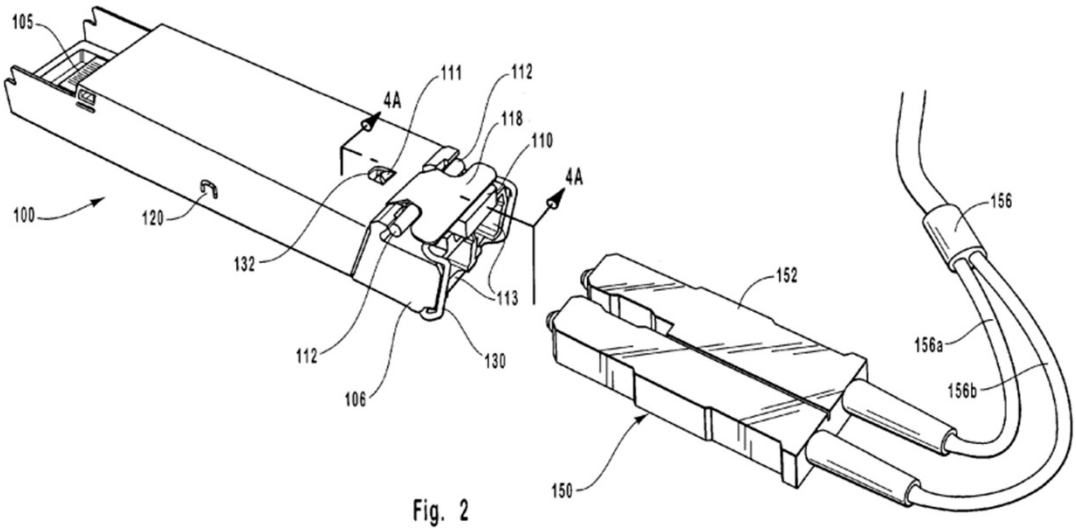

Ex. 1007, Fig. 2.

C. ITU-T Study Group 15, Temporary Recommendation 7, ("The G.984.3 Draft Recommendation") and ITU-T Study Group 15, Contribution 104 ("Contribution 104")[3]

The G.984.3 Draft Recommendation was published on October 17, 2003. The G.984.3 Draft Recommendation qualifies as prior art under at least pre-AIA 35 U.S.C. §102(a). The G.984.3 Draft Recommendation was not cited and was not considered during prosecution. Contribution 104,[3] the predecessor document to the G.984.3 Draft Recommendation, containing all relevant portions of the document, was published on August 25, 2003 and qualifies as prior art under at least pre-AIA 35 U.S.C. §102(a). Contribution 104 was not cited and was not considered during prosecution.

[3] Both the G.984.3 Draft Recommendation and Contribution 104 are virtually identical and contain the same substantive material and thus will be referred to collectively throughout the grounds of this Petition as "the G.984.3 Draft Recommendation/Contribution 104." Citations for each document will be provided as each document alone or in combination render the claims unpatentable for the reasons outlined herein.

1. Public Availability of the G.984.3 Draft Recommendation and Contribution 104

The G.984.3 Draft Recommendation was publicly available prior to the alleged priority date of the '754 Patent. *See* Ex. 1010. The G.984.3 Draft Recommendation is a draft document uploaded to the ITU Server prior to the October 2003 Geneva, Switzerland meeting of SG15. *Id.* at ¶¶34-40. The posted date of the document on the ITU Server is October 17, 2003. Ex. 1030. The posted date of Contribution 104 on the ITU Server is August 25, 2003. Ex. 1031. Once posted to the ITU Server, tens of thousands of individuals from nearly 1,000 of the most relevant industry members and participants had access to the G.984.3 Draft Recommendation/Contribution 104. Ex. 1010, ¶¶21-22. Becoming a member of the ITU was a simple and liberally available process, with no restrictions on which organizations could apply for membership. *Id.* at ¶18.

The Board has previously held that a reference is publicly accessible if it was disseminated or otherwise made available to the extent that persons interested and ordinarily skilled in the subject matter or art exercising reasonable diligence, could locate it. *GoPro, Inc. v. Contour IP Holding LLC*, 908 F.3d 690 at 693 (Fed. Cir. 2018) ("We have interpreted §102 broadly, finding that even relatively obscure documents qualify as prior art so long as the relevant public has a means of accessing them."). Any person interested in and rising to the level of having ordinary skill in

the subject matter of the ’754 Patent would have had access to the G.984.3 Draft Recommendation/Contribution 104 through reasonable diligence. Ex. 1010 ¶¶20-27.

Most individuals skilled in the art and within the industry of PONs were employed by member organizations of the ITU, such as Alcatel, Lucent, Adtran, Huawei, and many other organizations in the field of telecommunications, and thus had access to all documents published on the ITU server. *Id.* at ¶18. Moreover, persons of the interested public would have been able to, and motivated to, locate the G.984.3 Draft Recommendation/Contribution 104. By 2003, the ITU was well-known to POSITAs as an important source of information and technological developments by key industry participants and leaders. *Id.* at ¶26. Thus, any POSITA would have naturally looked to documents contained on the ITU server, especially those constituting meeting contributions and draft recommendations, for the latest and most innovative optical technologies and to ensure that any developing technology would comply with the standards utilized universally in the industry. *Id.* at ¶¶24-26.

Additionally, the ITU server is easily navigable, organized in a temporal manner by study group and meeting, containing hyperlinks leading to a downloadable copy of each available document and listing the relevant working group, question, and title. *Id.* at ¶¶19, 31-32. Each document is tagged with the

specific relevant topic, or question, allowing for individuals to easily locate documents via their relevant subject matter. *Id.* A POSITA would have known that any documents related to PONs would be published under Study Group 15 and, in particular, Working Party 1 which studies transport aspects of access, home, and smart grid network and is responsible for GPON standardization. *Id.* at ¶13. The ITU-T publishes all documents by study period, meeting, associated study group, and working party which allows for structured, organized access to any draft recommendations or contributions. *Id.* at 31-32. Additionally, anyone can utilize the ITU website's search function to find meeting documents using key words, including non-members. *Id.*

The Board has further stated that, if accessibility is proved, there is no requirement to show that particular members of the public actually received the information. *GoPro*, 908 F.3d at 693. Even so, at least one of the inventors of the '754 Patent *did* have direct access to and actually received the G.984.3 Draft Recommendation/Contribution 104 documents—Walter Soto, through his employer Agere, was in attendance at at least two meetings where the G.984.3 Draft Recommendation/Contribution 104 were discussed. Ex. 1010, ¶39. Thus, Walter Soto not only had direct knowledge of and access to the prior art references but was also an attendee at meetings discussing the contents of the documents. *Id.*

VI. LEVEL OF ORDINARY SKILL IN THE ART

A person of ordinary skill in the art ("POSITA") pertinent to the '754 Patent would have had at least (1) an undergraduate degree in electrical engineering, computer engineering, computer science, or a comparable field of study and (2) at least two years of experience with optical data communications or a comparable field of work. Ex. 1003, ¶¶30-31. Individuals with different education and additional experience could still be of ordinary skill in the art if that experience compensates for a deficit in their education stated above. *Id.* Additional education might substitute for some experience, and vice versa.

VII. THE CHALLENGED CLAIMS ARE UNPATENTABLE

A. Ground 1: Claims 1-16 and 18-30 are Unpatentable Under 35 U.S.C. §103 over Shraga in view of Togami

1. Motivation to Combine

Shraga and Togami are directed towards data communications in an optical network. Ex. 1005; Ex. 1007. Shraga discloses a method for transmitting and receiving data communications in an optical network, and Togami discloses a pluggable transceiver module for use in optical networks. *Id.*; Ex. 1003, ¶¶94-98, 99-102.

A POSITA would have been motivated to combine the optical transceiver module of Togami with the optical network data communications system of Shraga

to create a pluggable optical transceiver module for use in transmitting data communications over a PON for several reasons. Ex. 1003, ¶¶106-07.

First, utilizing the pluggable optical module having a small form-factor in accordance with existing standards disclosed in Togami for data communications in a PON, as taught in Shraga, was already well-known and implemented in the art. *Id.* at ¶107; Ex. 1008; Ex. 1012; *see also* Ex. 1034 (announcing "hot-pluggable" SFP fiber optic transceivers, which "allows greater flexibility in system configurations, and eliminates system downtime during upgrades and maintenance"). For example, Fig. 1 from an article published in the OKI Technical Review in April 2002 shows the use of small form-factor pluggables in connection with PONs such as GPON, EPON, and LANs. Ex. 1003, ¶107; Ex. 1012, Fig. 1, 95.

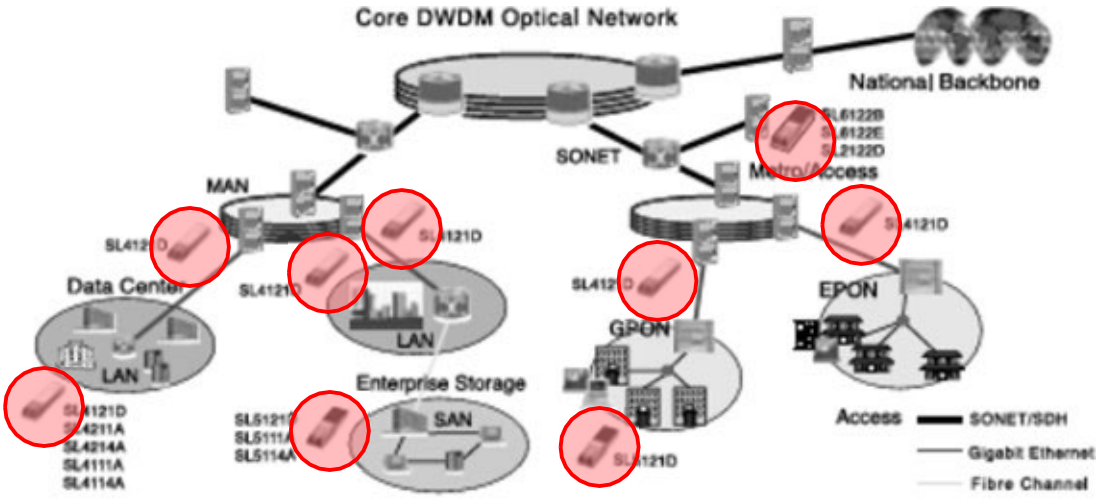

Fig. 1 Optical communications network for the broadband era

Additionally, Fujimori (U.S. Patent No. 7,206,366), filed on January 7, 2003, also demonstrates the general knowledge of the POSITA as it discloses the use of pluggable optical transceiver modules in high-speed data communication networks over optical fibers (i.e., PONs). Ex. 1003, ¶109; Ex. 1008, 1:38-40, 2:11-41. The pluggable modules of Fujimori "may be configured to communicate, namely transmit and receive, data between computer system and optical network," where the data transmitted and/or received may be formatted in accordance with the well-known OSI protocol standard. Ex. 1003, ¶109; Ex. 1008, 5:65-6:2.

Second, a POSITA would have been motivated to combine Shraga and Togami because, as disclosed by the MSAs that had already standardized certain pluggable form-factors, a pluggable optical module was easier to install, repair, and/or replace than a traditional mounted transceiver, decreasing the chances of improper installation and the likelihood that other components near the transceiver could be damaged during service. Ex. 1003 ¶110; Ex. 1007, 2:1-8. Further, a pluggable optical transceiver module took less time to install, repair, and/or replace because of its removable nature, meaning less down time for the fiber-optic system during maintenance. Ex. 1003 ¶111; Ex. 1007, 1:49-60.

Third, a POSITA would have been motivated to combine Shraga and Togami because a pluggable optical transceiver module is more compact, taking up less room

than traditional transceivers. Ex. 1003, ¶112. Decreasing the transceiver size was a goal of a POSITA in the early 2000s, as stated in the '754 Patent. Ex. 1001, 2:14-16. Further, Togami states that "it is desirable to miniaturize the physical size of the transceiver module to increase the port density, i.e., . . . accommodate a higher number of network connections . . ." Ex. 1003, ¶112; Ex. 1007, 1:46-2:7.

Fourth, a POSITA would have been motivated to combine Shraga and Togami to create a pluggable optical transceiver module for transmitting data communications over a PON because a pluggable optical transceiver is more cost effective, a goal of a POSITA in the early 2000s. Ex. 1003, ¶113; Ex. 1008, 2:42-47. Utilizing the already-standardized small form-factor pluggable optical modules allowed for system manufacturers to save costs by utilizing a large number of ports for data communications; providing for easier installation, repair and replacement; decreasing manufacturing costs; and allowing for upgrades to the optical system by simply replacing the module. Ex. 1003, ¶113; Ex. 1008, 1:39-55, 2:42-47.

Moreover, a POSITA would have had a reasonable expectation of success in combining the PON data communications system in Shraga with the pluggable optical transceiver module in Togami because many of the expected results of the combination were stated goals and benefits in the references and, more generally, goals of POSITAs during the early 2000s. Ex. 1003, ¶¶114-15.

2. Claim 1

a) [1.pre]

To the extent the preamble is limiting, the combination of Shraga and Togami discloses Claim [1.pre]. Ex. 1003, ¶¶116-22. Shraga discloses a method for communication over a PON from a central point to end points, where the PON is composed of an OLT (in yellow below) connected to three ONTs/ONUs (in red below) via the optical distribution fabric (in blue below). Ex. 1005, Fig. 1. The OLT and ONTs/ONUs each contain transmitting and receiving components and an optical interface performing optical-to-electrical and electrical-to-optical conversion. *Id.*

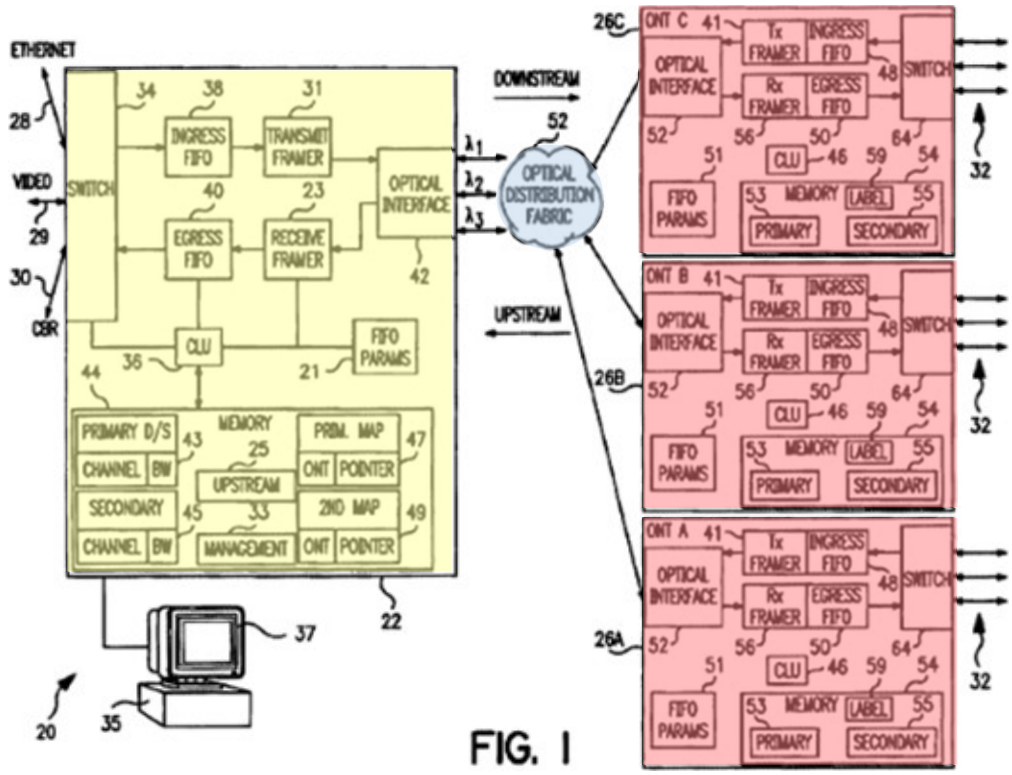

Ex. 1003, Fig. 1 (annotated).

Shraga further discloses that signals in the PON are transferred from the OLT to the ONTs/ONUs "via fiber optic cable and passive optical splitters, which comprise the physical optical distribution fabric (52) of the network." *Id* at 1:10-27.

Togami discloses a pluggable optical transceiver module for use in fiber-optic communications, where the module is a pluggable optical transceiver in a small form-factor pluggable (in yellow below). Ex. 1007, 2:45-62, 5:5-19, Fig. 2. The pluggable is an opto-electronic transceiver module "typically used to interface an optical transmission cable medium" (in red below) to a "host device, such as a network switch, hub, router, computer or the like." *Id.* at 1:5-15 2:45-62. Such devices are capable of removably coupling to the host device because they are capable of being inserted/removed. Ex. 1003, ¶120; *Id*.

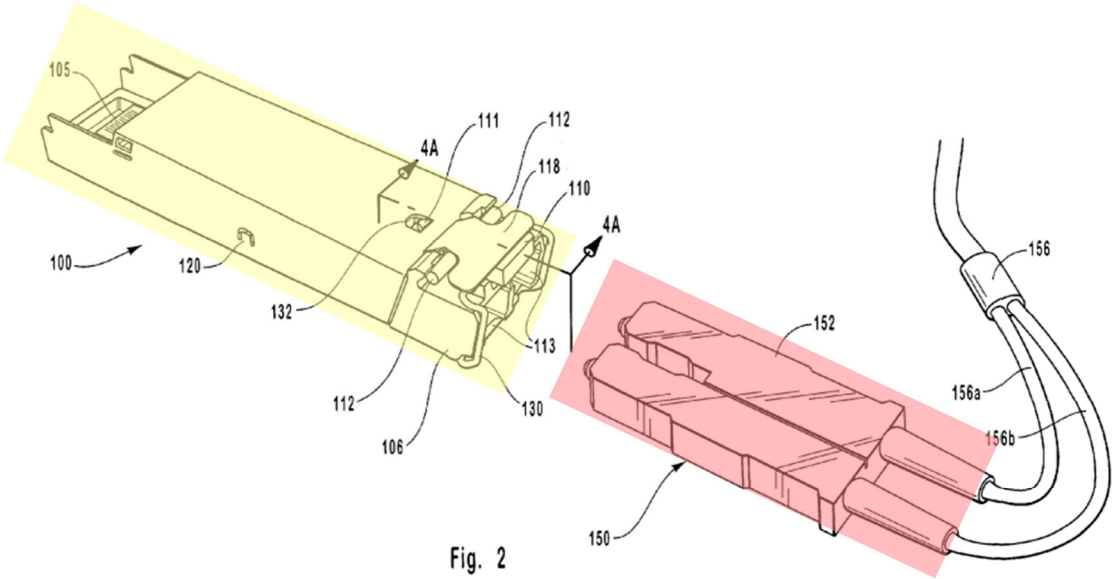

Ex. 1007, Fig. 2 (annotated).

Specifically, Togami discloses that the module's size and shape corresponds to specifications defined by the hot-pluggable MSA standard. *Id.* at 1:57-2:7, 4:49-63.

b) [1.A]

The combination of Shraga and Togami discloses Claim [1.A]. Ex. 1003, ¶¶123-26. Shraga discloses that the ONTs/ONUs are "*coupled* to the [optical distribution] fabric," forming a connection point (i.e., optical port) allowing the transfer of data. Ex. 1003, ¶124; Ex. 1005, 1:10-27, 4:38-41, 8:36-47, Fig. 1. A POSITA would have understood this connection point is an optical port for coupling to optical fibers of the network. *Id.*

Likewise, Togami has "at least one receptacle capable of physically receiving and interfacing with an optical fiber connector" which optically couples the transceiver module to a fiber-optic cable. Ex. 1007, 3:2-6. Togami states that the module contains a "connector portion" (shown below in yellow) that possesses a "receptacle configuration" (i.e., optical port) which "operatively receives a corresponding modular fiber connector configuration, such as is typically used to interface with an optical fiber cable" (shown below in red). *Id.* at 5:20-30, Fig. 2.

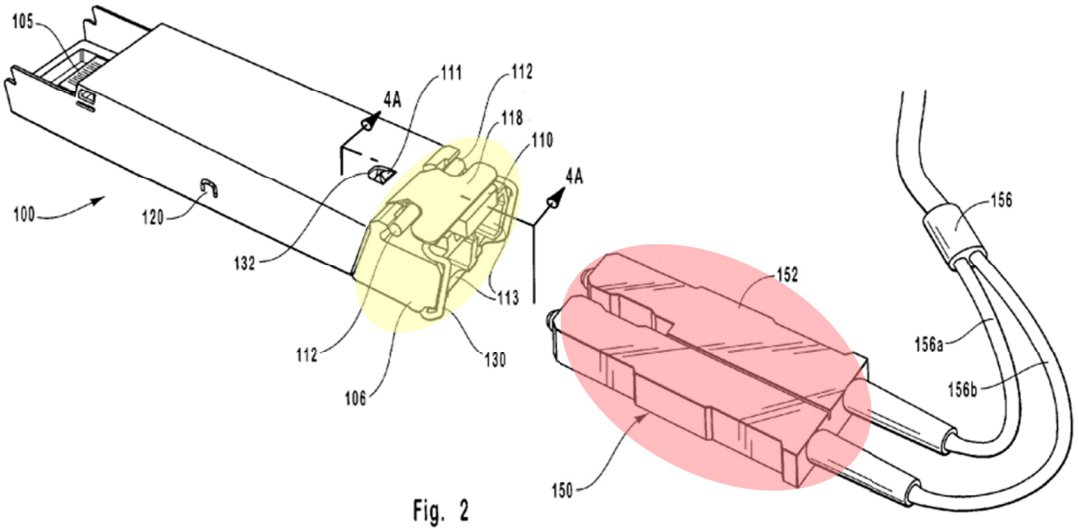

Ex. 1007, Fig. 2 (annotated).

c) [1.B]

The combination of Shraga and Togami discloses Claim [1.B]. *See* supra Claim [1.pre]; Ex. 1003, ¶¶127-32. It would have been obvious to a POSITA that

Shraga's optical interface, which connects each ONT/ONU to the optical distribution fabric of the PON, is bi-directional, as it is configured to receive incoming data communications from the network and transmit outgoing data communications onto the network, i.e., transport data communications bi-directionally. Ex. 1003, ¶128; Ex. 1005, 7:60-8:18, 8:36-47, Fig. 1. Further, Shraga's Figure 1 shows a bi-directional arrow (in red below) extending from the optical interface of the ONT/ONU to the optical distribution fabric, representing the bi-directional flow of data. *Id.*

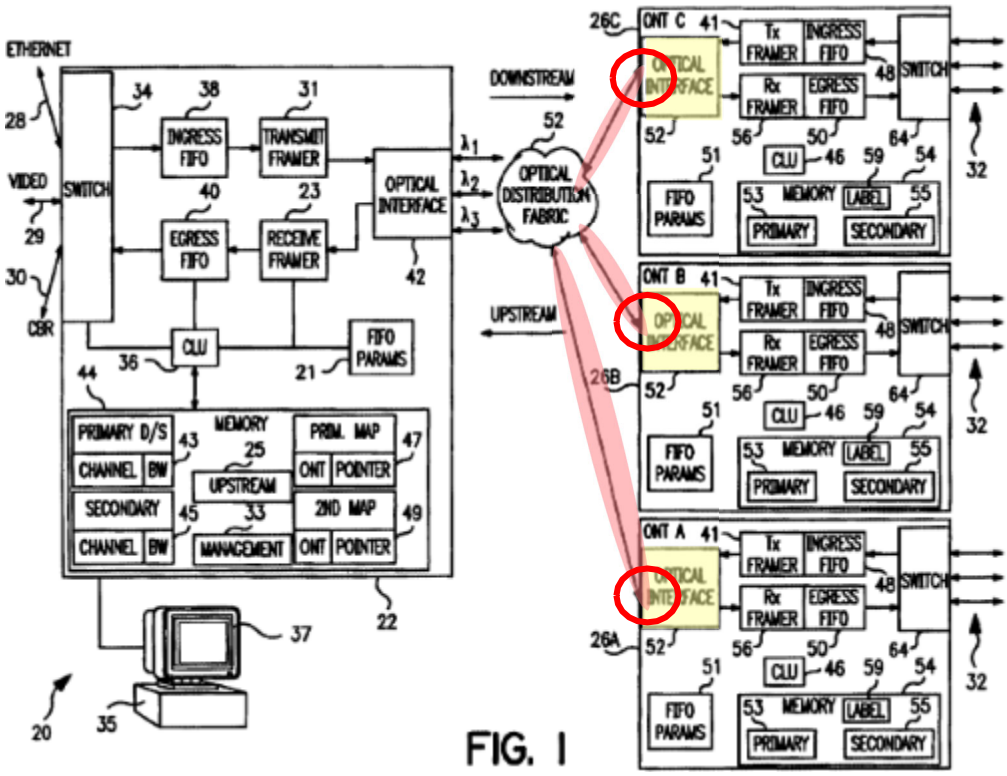

Ex. 1005, Fig. 1 (annotated).

A POSITA would have understood that, as discussed *supra* Claim [1.A], the ONT/ONU would contain an optical port for coupling to the network (circled in red above). Ex. 1003, ¶129; Ex. 1005, Fig. 1. A POSITA would have understood that the optical interface, to transmit and receive data to and from the fiber-optic cable, would thus be coupled to the optical port. *Id.*

Shraga also teaches that its optical interface block performs opto-electrical conversion: the optical interface converts data from a "transmit framer" (an electrical signal) to an "optical format" (an optical signal) and the optical interface receives optical signals from the fabric and converts the signals to data (an electrical signal), which is then transferred to the receive framer. Ex. 1003, ¶130; Ex. 1005, 8:10-43.

Likewise, Togami discloses a transceiver module containing "a laser transmitter circuit capable of converting electrical signals to optical signals and an optical receiver capable of converting received optical signals back into electrical signals." Ex. 1003, ¶131; Ex. 1007, 1:30-45.

d) [1.C]

The combination of Shraga and Togami discloses Claim [1.C]. *See supra* claim [1.pre]; Ex. 1003, ¶¶133-38. Shraga discloses that each OLT and ONT/ONU contains a control and logic unit (CLU) (shown below in yellow) coupled to the optical interface which controls, via management software, the overall operation of

the PON. Ex. 1005, 7:60-8:9, 8:36-43. A POSITA would have understood that, for the ONT/ONU to process signals from the head-end, the CLU would necessarily be "electrically coupled" to the optical interface, as the internal components of the ONT/ONU communicate via electrical signals. Ex. 1003, ¶134; Ex. 1005, 8:10-18, 8:36-43, 10:56-11:15.

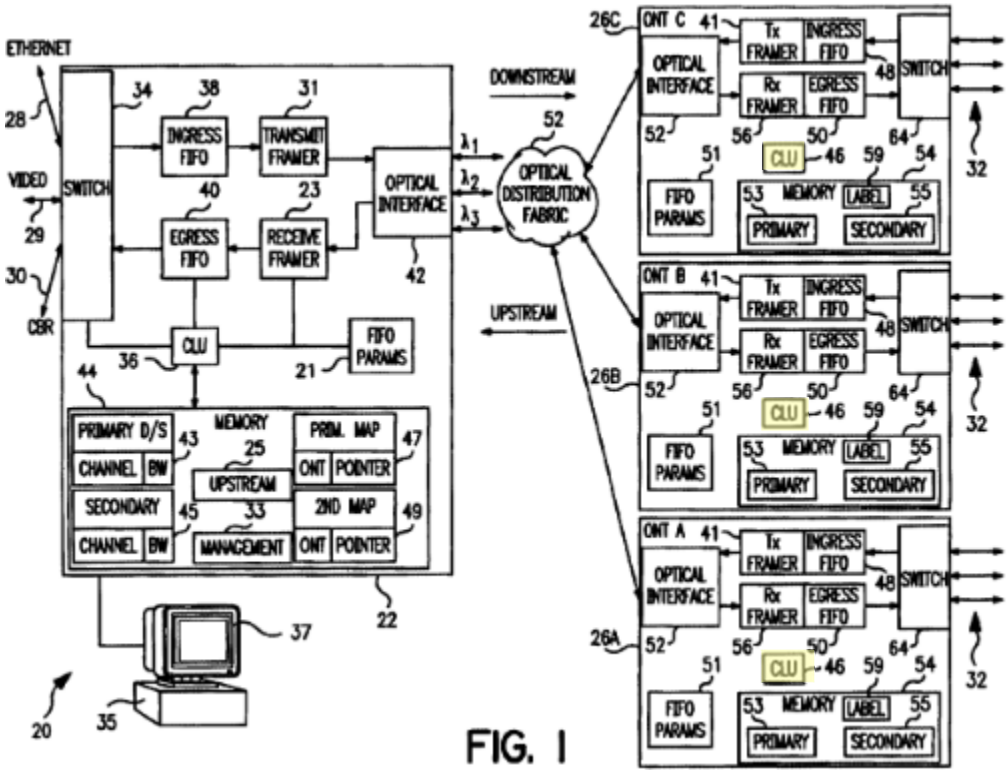

Ex. 1005, Fig. 1 (annotated).

Further, Shraga teaches that the CLU controls the operation of data communications in the PON, including data ingress/egress, as well as the transmit

and receive framers, which in conjunction allow the ONT/ONU to transmit and receive optical data communications. Ex. 1003, ¶134; Ex. 1005, 7:50-8:9, 8:36-47.

Shraga also discloses that downstream frames transmitted from the OLT head-end are comprised of a header (in yellow below) that begins with a frame alignment signal (identified as 84 below) which is used by the ONTs/ONUs as a reference point for syncing upstream transmissions, and further contains a series of overhead sections directed to specific ONTs/ONUs (in red below) is received by the ONTs/ONUs to identify a beginning of the frame, acting as a starting marker for frame timing throughout the PON. *Id*. at 9:66-10:13, 10:38-55, Fig. 2, Fig. 3.

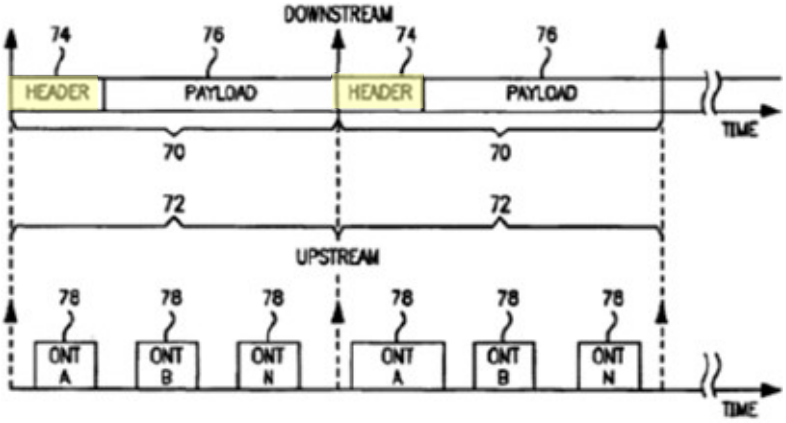

FIG. 2

Ex. 1005, Fig. 2 (annotated).

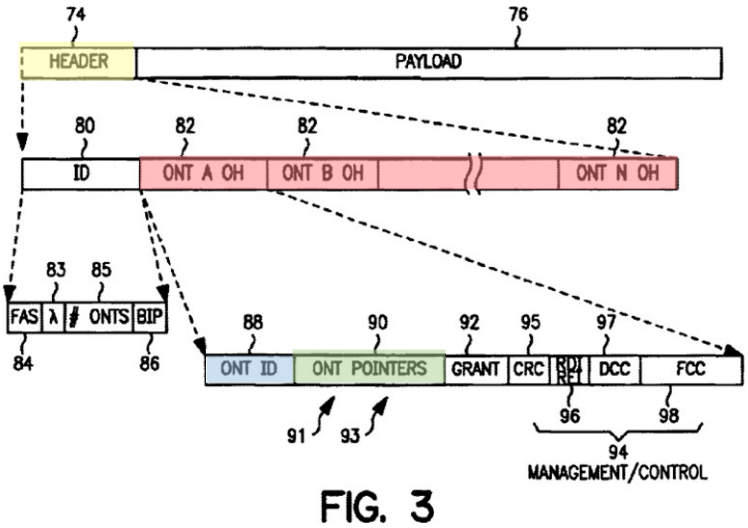

FIG. 3

Ex. 1005, Fig. 3 (annotated).

Each ONT/ONU overhead section includes an ONT identifier (in blue above) and an ONT pointers section (in green above). *Id.*; *Id.* at 10:56-11:6. Shraga teaches that each ONT pointers section includes a start transmission time (91 above) measured from the frame alignment signal, indicating when the ONT/ONU is to begin transmitting data within its window upstream, back to the head-end. *Id.*

Once an ONT/ONU has received its start time from the OLT (in yellow below), the CLU uses this assignment to construct the transmission window, beginning with an overhead section (in red below) in accordance with the start time (in blue below) provided by the pointer of the downstream transmission. *Id.* at 14:42-57, Fig. 7. After the window is fully constructed by the CLU, the ONT/ONU transmits the window upstream at the start time allocated to it. *Id.*; *Id.* at 9:56-65.

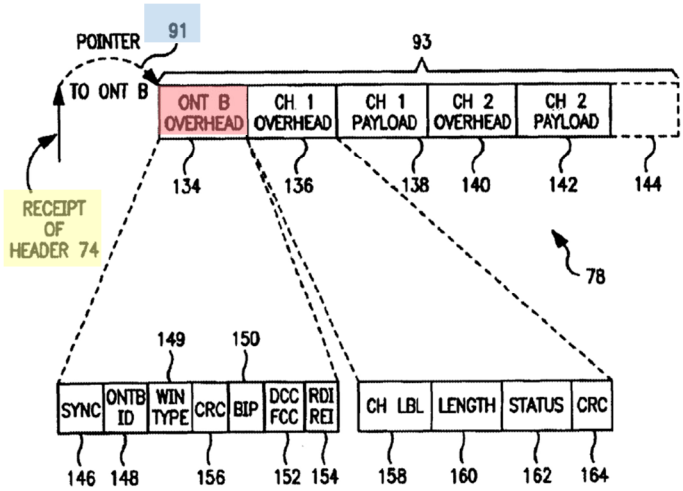

FIG. 7

Ex. 1005, Fig. 7 (annotated).

Thus, a POSITA would have understood that Shraga teaches a transceiver module "configured to transmit the data communications to the head-end of the PON responsive to the start times" provided by the head-end OLT. Ex. 1003, ¶138.

e) [1.D]

The combination of Shraga and Togami discloses Claim [1.D]. *Supra* claim [1.pre]; Ex. 1003, ¶¶139-46. Shraga teaches that each ONT/ONU contains an ingress FIFO and egress FIFO (in yellow below) which functionally contain the claimed electrical network interface port. Ex. 1003, ¶¶140-41; Ex. 1005, 8:36-43. The electrical network interface port is electrically connected to the claimed control module because the taught ingress FIFO and egress FIFO are electrically connected to the CLU (in red below)—the CLU "*controls* the operation" of data ingress and

data egress. Ex. 1003, ¶140; Ex. 1005, 8:2-5, 8:36-43. For the CLU to control data ingress/egress, it must be electrically coupled to the ingress FIFO and egress FIFO, which a POSITA would understand as the electrical network interface port. Ex. 1003, ¶140.

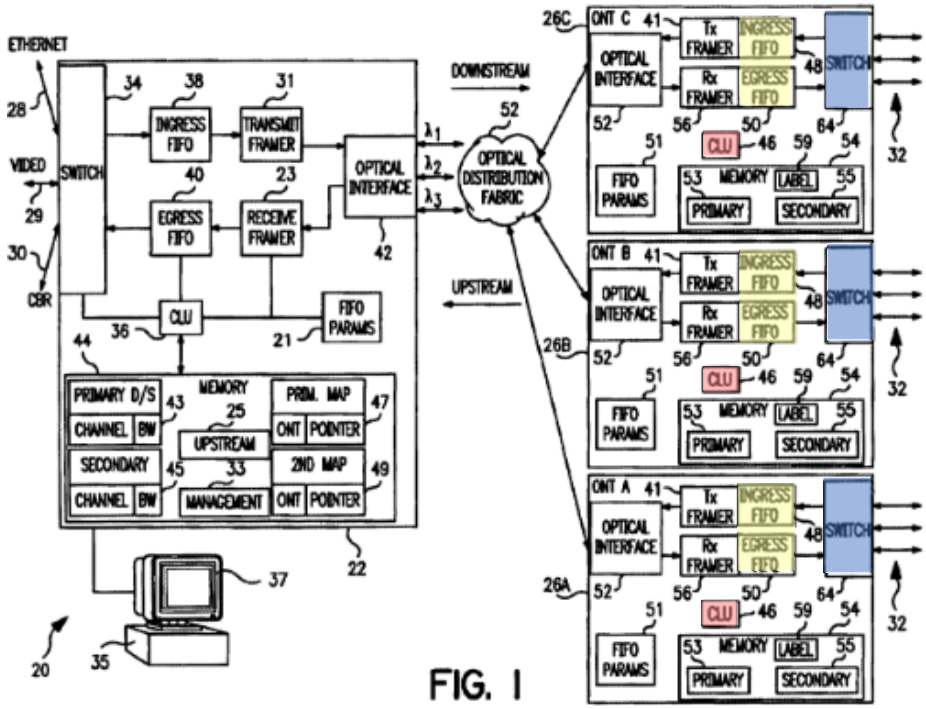

Ex. 1005, Fig. 1 (annotated).

Additionally, Shraga teaches that ONTs/ONUs are coupled on their downstream sides to data lines which provide lower-rate services to downstream clients of the passive optical network, such as electrical users in the form of PCs. Ex. 1003, ¶142; Ex. 1005, 7:29-35. A POSITA would have understood that, because the ONT/ONU disclosed in Shraga connects to electrical users downstream, and

because the process in Shraga converts optical signals to "data" signals, the coupling between the ONT/ONU and the downstream data lines is through an electrical interface. *Id.*; Ex. 1005, 8:10-18, 8:36-43.

Further, Shraga teaches those downstream clients, such as a switch or router, contains an optical module interface port for coupling to the ONT/ONU transceiver model to transfer data, in the form of electrical signals, between the module and client. Ex. 1003, ¶143.

Likewise, Togami discloses that, typically, a pluggable transceiver module is electrically interfaced with a host device via a compatible connection port (i.e., the electrical network interface port) (in yellow below) and that the pluggable optical transceiver module is capable of being operatively received within a compatible port provided by the host device (i.e., the optical module port). Ex. 1003, ¶144; Ex. 1007, 1:45-49, 2:46-57, Fig. 1. Togami teaches that host devices include network *switches* and *routers*. *Id.* The module disclosed in Togami is capable of electrically interfacing with the host device and thus, a POSITA would have understood that the pluggable transceiver module and the host device communicate via electrical signals. *Id.*; Ex. 1007, 2:63-3:13, 5:5-19.

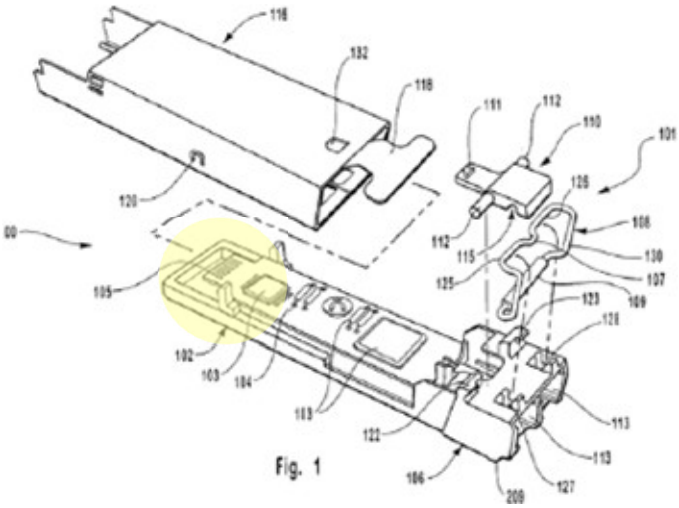

Ex. 1007, Fig. 1 (annotated).

Further, a POSITA would have known that any pluggable form-factor device, such as the device disclosed in Togami, would have included an electrical network interface port for electrically coupling into the optical module port of the host device. Ex. 1003, ¶145; Ex. 1016, 14 (describing SFP electrical connector specifications).

f) [1.E]

The combination of Shraga and Togami discloses Claim [1.E] for reasons discussed above in Claim [1.pre], [1.C], and [1.D]. Ex. 1003, ¶147.

3. Claim 2

The combination of Shraga and Togami discloses Claim 2. Ex. 1003, ¶¶148-51. Specifically, Togami teaches an opto-electronic transceiver module formed as a Small Form-factor Pluggable ("SFP") transceiver in accordance with the MSA. Ex. 1003, ¶149; Ex. 1007, 1:60-2:1, 2:45-57. Togami further states that the optical

transceiver module disclosed is not limited to an SFP form-factor and can be utilized in many types of pluggable module formats. *Id.*; Ex. 1007, 2:57-62. It would have been obvious to a POSITA that this would include other form-factors, such as XFP, X2, XPAK, and XENPAK, which were all included in a well-known series of pluggables at the time. Ex. 1003, ¶150. In fact, the '754 Patent itself discloses these form-factors as being in the prior art as related optical interface implementations, shown below. Ex. 1001, Fig. 13.

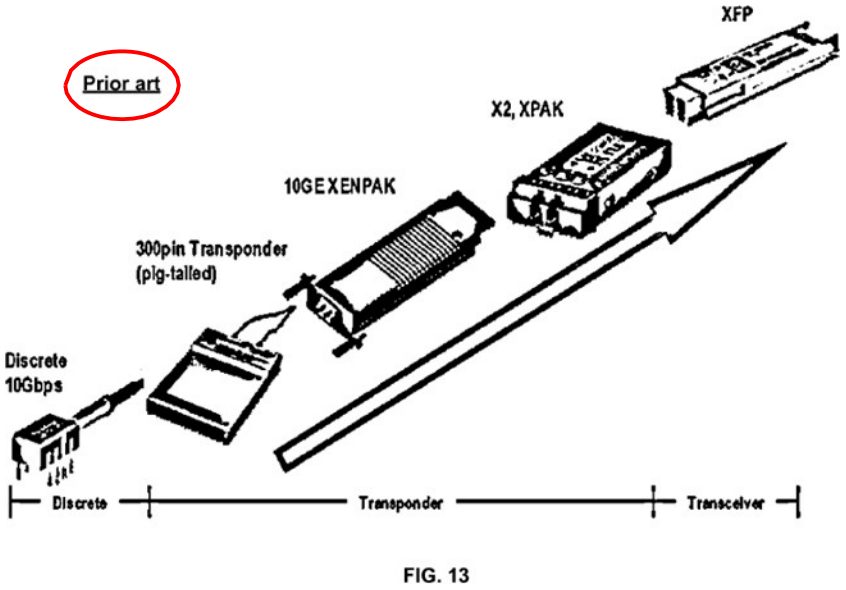

Ex. 1001, Fig. 13 (annotated).

4. Claim 3

The combination of Shraga and Togami discloses Claim 3. Ex. 1003, ¶¶152-57. As discussed above in Claims [1.pre] and [1.C], Shraga and Togami in combination disclose an optical transceiver module that is configured to receive

downstream communications from the OLT in a PON, allocating start times for each ONT/ONU to begin upstream data transmission, and each ONT/ONU is configured to transmit back to the OLT, in the upstream direction, data communications responsive to the OLT's start time allocation. Ex. 1003, ¶153. Further, Shraga teaches that data-channels transmitted by the head-end OLT to the ONTs/ONUs contain an overhead section comprising a pointers section (in green below) which, in addition to containing the start transmission time, includes a "maximum length" (93 below) that each ONT/ONU's window is permitted to transmit within. Ex. 1003, ¶154; Ex. 1005, 10:56-11:6, Fig. 3.

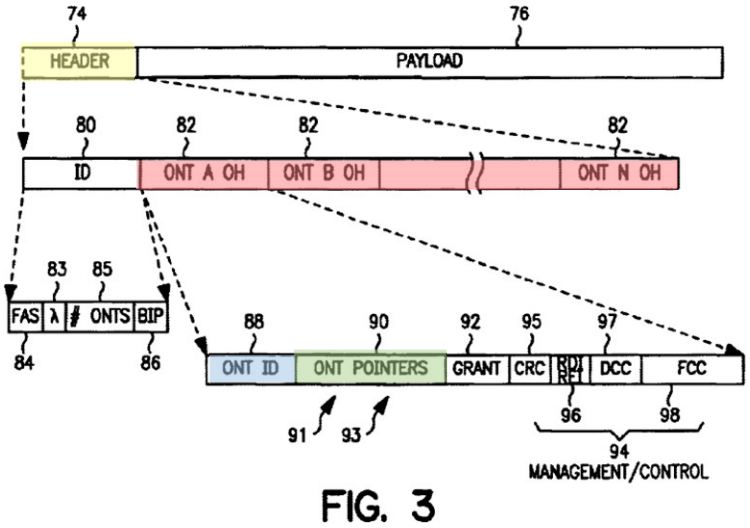

FIG. 3

Ex. 1005, Fig. 3 (annotated).

The CLU of each ONT/ONU then uses this information to construct the transmission window in accordance with the start transmission time (in red below)

length (in blue below) provided by the pointer of the downstream transmission from the OLT. Ex. 1003, ¶155; Ex. 1005, 10:56-11:6, Fig. 7. Once constructed by the CLU, the ONT/ONU transmits the window upstream at the direction of the CLU and in accordance with the ONT/ONU's assigned transmission start time. Ex. 1003, ¶156; Ex. 1005, 9:56-65. A POSITA would have understood that Shraga teaches a transceiver module configured to end transmission to the head-end of the PON responsive to end times because each ONT/ONU receives an assigned start time and length time and would thus know that its transmission must end at a certain time, possessing the equivalent knowledge of an "end time." Ex. 1003, ¶¶156-57.

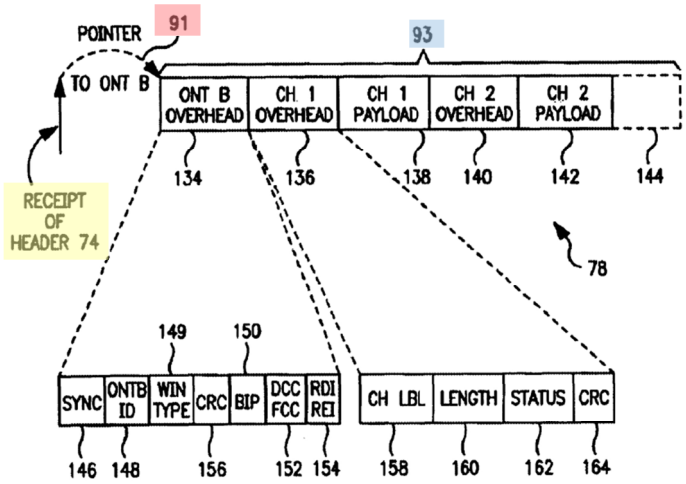

FIG. 7

(Ex. 1005, Fig. 7).

5. Claim 4

The combination of Shraga and Togami discloses Claim 4. Ex. 1003, ¶¶158-62. As discussed above in Claims [1.pre], [1.C], and 3, Shraga and Togami in combination disclose an optical transceiver module configured to receive downstream communications from the OLT allocating start times and length fields. Ex. 1003, ¶¶159-60; Ex. 1005, 10:56-11:6. Shraga explicitly teaches that each ONT/ONU contains a CLU (i.e., control module) that is configured to transmit data communications back to the head-end OLT according to start time and length allocations. Ex. 1003, ¶161; Ex. 1005, 9:56-65, 10:56-11:6, 15:26-37, Fig. 7.

6. Claim 5

The combination of Shraga and Togami discloses Claim 5. Ex. 1003, ¶¶163-165. A POSITA would have understood that the optical fibers discussed in Shraga would consist of either multimode or single mode optical fibers, as these were the well-known and available types of optical fibers at the time of the ’754 Patent’s priority date. *Id.* at ¶164; Ex. 1013, 33-37.

7. Claim 6

The combination of Shraga and Togami discloses Claim 6. Ex. 1003, ¶¶166-170. Togami discloses an opto-electronic transceiver module that contains a connector portion positioned at the front end of the module (in yellow below) and

configure to operably interface with an optical fiber cable connector (in red below). Ex. 1007, 5:20-30

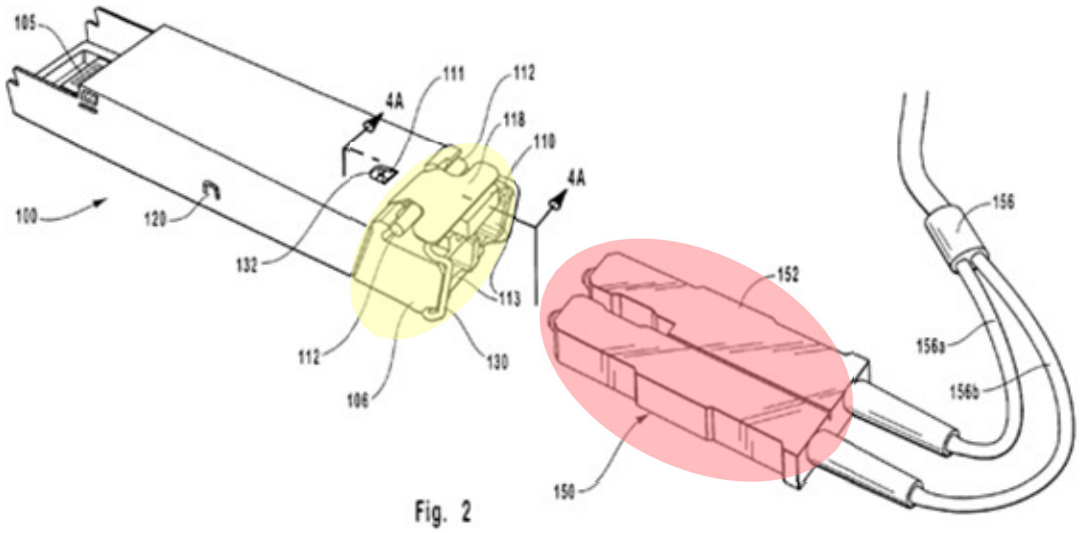

Ex. 1007, Fig. 2 (annotated).

Togami explicitly states this receptacle can be configured to accommodate any connector configuration, including a Fiber Channel (FC). *Id.* A POSITA would have understood the language of Togami to disclose a number of other connector configurations, such as Subscriber Connector (SC), Lucent Connector (LC), Straight TP (ST), or Miniature Unit (MU), which were all well-known connectors at the time of the '754 Patent. Ex. 1003, ¶169; Ex. 1020.

8. Claim 7

The combination of Shraga and Togami discloses Claim 7. Ex. 1003, ¶¶171-74. As discussed in Claims [1.pre] and [1.D], Togami discloses a pluggable optical

transceiver module capable of being operatively received via an electrical interface within a compatible port of a host device. *Id.* at ¶172; Ex. 1007, 2:45-3:13. A POSITA would have understood the need for an electrical interface, such as that explicitly disclosed by Togami, would have been selected from a group containing a serial interface, a parallel interface, or a XAUI interface because these interfaces were all well-known electrical interfaces at the time of the '754 Patent. Ex. 1003, ¶173; Ex. 1021.

9. Claim 8

The combination of Shraga and Togami discloses Claim 8. Ex. 1003, ¶¶175-80. As discussed above in Claim [1.pre] and [1.B], Shraga discloses an optical interface connecting each of the ONTs/ONUs to the fabric of the PON, which a POSITA would have known was bi-directional. Ex. 1003, ¶176; Ex. 1005, 8:36-47, Fig. 1. Further, as discussed above in Claim [1.C], Shraga's ONTs/ONUs contain an optical interface that connects directly to the framing block of the device (in yellow below) along with a CLU (in red below), the control module of the device, electrically coupled to each of the components of the ONT/ONU. Ex. 1003 ¶177; Ex. 1005, 7:60-8:9, 8:36-43, Fig. 1.

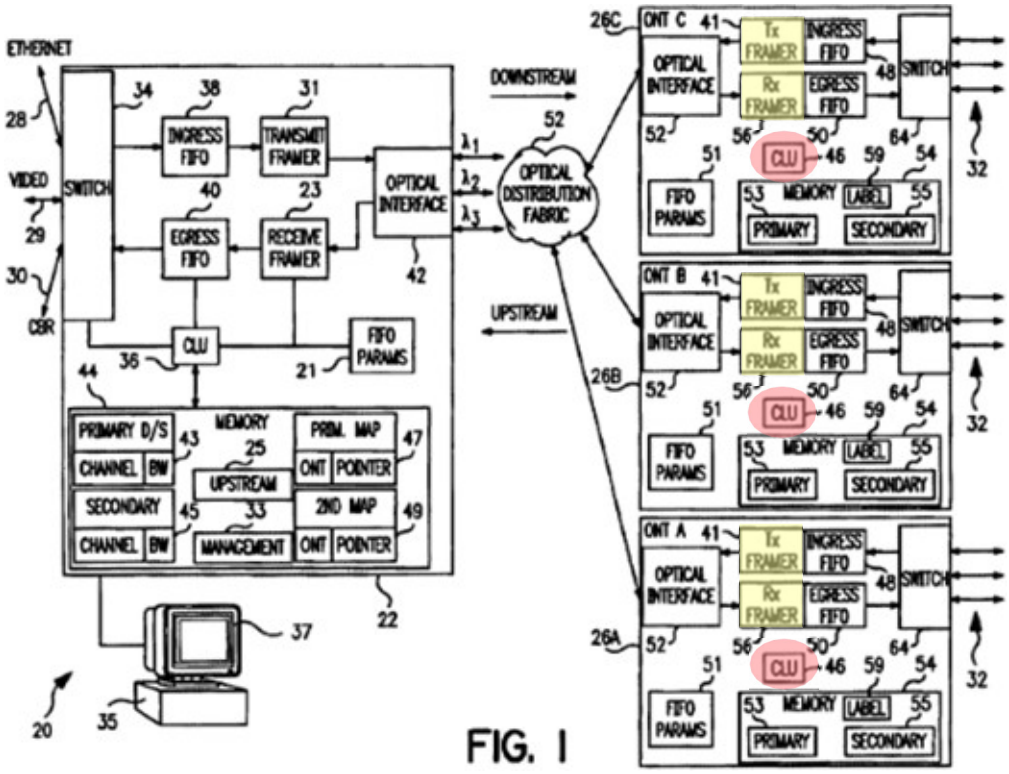

Ex. 1005, Fig. 1 (annotated).

Shraga further discusses how each CLU coordinates framing data communications for transmission in accordance with the time slot allocation received from the OLT, which a POSITA would have understood to convey that the components of the ONT/ONU disclosed in Shraga are configured to receive and transmit data communications in accordance with a framing protocol for the PON. Ex. 1003, ¶¶178-179; Ex. 1005, 1:5-8, 15:26-36, 16:38-58.

10. Claim 9

The combination of Shraga and Togami discloses Claim 9. Ex. 1003, ¶¶181-85. Shraga confirms that methods for routing data in a PON were well-known in the art, disclosing a prior art reference discussing data routing including an identifier for the data's destination, such as a specific ONT/ONU. Ex. 1003, ¶182; Ex. 1005, 1:56-67. Shraga further discloses a similar method: Transmissions from an OLT to an ONT/ONU contain downstream frame headers (in yellow below), comprising an ONT identification section (in red below) for the purpose of directing each window of data to the correct destination and a pointers section (in green below) containing information for use by ONTs/ONUs to transmit back to the head-end. Ex. 1003,¶183; Ex. 1005, 10:38-11:15, Fig. 2, Fig. 3.

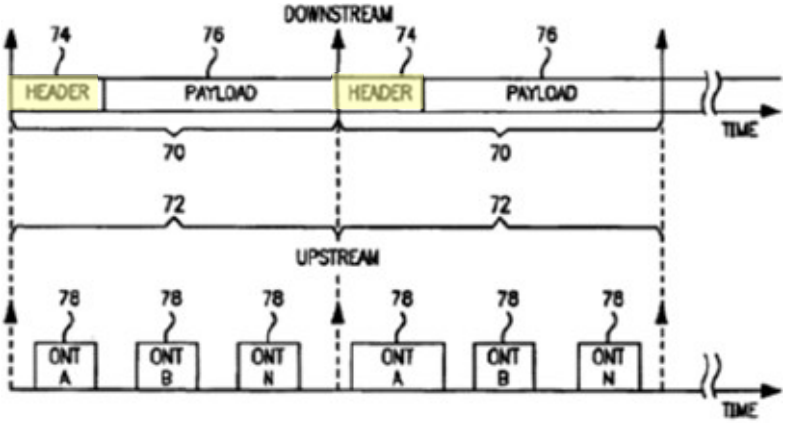

FIG. 2

Ex. 1005, Fig. 2 (annotated).

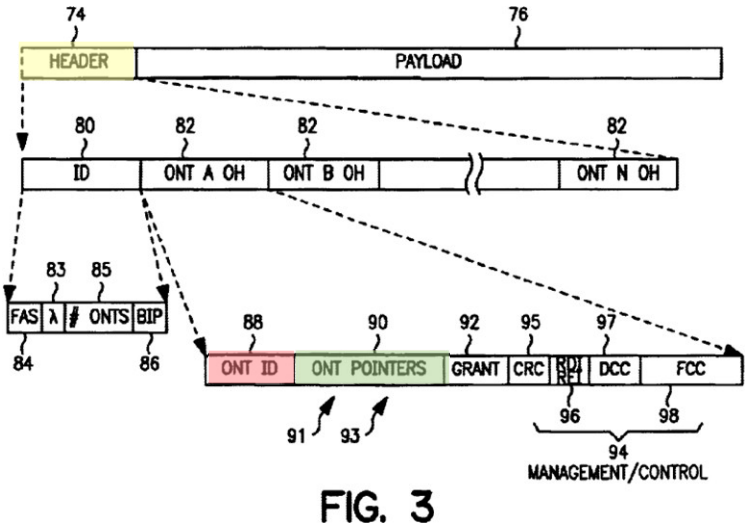

FIG. 3

Ex. 1005, Fig. 3 (annotated).

A POSITA would have understood that the header and pointer section of the downstream frame contain assignments of an identification address from the head-end to each ONT/ONU. Ex. 1003, ¶184.

11. Claim 10

The combination of Shraga and Togami disclose Claim 10. Ex. 1003, ¶¶186-91. As discussed in Claims [1.pre] and 9, Shraga discloses a method for assigning and identifying ONTs/ONUs in a PON. Ex. 1003, ¶187. Shraga further teaches how a header is computed by the CLU by making an initial determination of how many ONTs/ONUs are active in the network (in yellow below). *Id.* at ¶¶188-89; Ex. 1005, 11:48-60, Fig. 4.

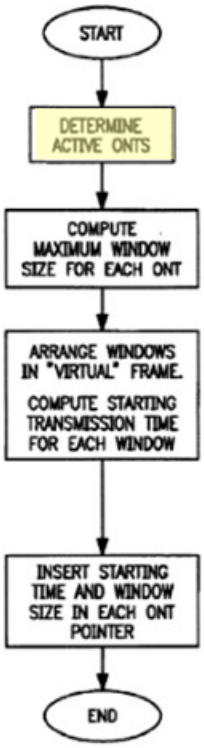

FIG. 4

Ex. 1005, Fig. 4 (annotated).

Shraga states that "methods for performing such determinations are known in the art" and "[m]ost preferably, the method used includes processes for noting when a new ONT comes on-stream, as well as when an ONT goes off-stream." *Id*. Because this method is "implemented by [the] CLU," and because the CLU, as discussed above in Claim 8, is configured to transmit upstream communications to the OLT, the CLU is configured to respond to the head-end responsive to a network operating protocol for new clients. Ex. 1005, 11:49-61, 15:26-36, Fig. 4. A POSITA would have understood that the control module would operate in accordance with a network

operating protocol known in the art, such as the protocol disclosed in the G.984.3 Draft Recommendation/Contribution 104. Ex. 1003, ¶190; Ex. 1011-1, §7.4.2, 10.2.1; Ex. 1011-2, §7.4.2, 10.2.1.

12. Claim 11

The combination of Shraga and Togami discloses Claim 11. Ex. 1003, ¶¶192-94. Shraga states that the distance between the OLT and each ONT/ONU causes a delay in signal transmission and teaches that, to compensate for this delay, a ranging time is added to each ONT/ONU's initial start time determined by a ranging method known in the art. Ex. 1003, ¶193; Ex. 1005, 12:34-60. As discussed above in Claim [1.C], each ONT/ONU's CLU controls the reception and transmission of signals in the network, including each ranging signal response. *Id.*; Ex. 1005, 12:40-60, 7:60-8:9, 8:36-47. A POSITA would have understood that the ranging signal disclosed in Shraga is the "response delay message" claimed in the '754 Patent because both signals are sent to indicate the transmission delays in the network and are utilized to correct said delay. *Id.*; Ex. 1003, ¶194.

13. Claim 12

The combination of Shraga and Togami discloses Claim 12. Ex. 1003, ¶¶195-97. As discussed in Claim 11, to account for transmission delays between the head-end and ONTs/ONUs, the OLT initiates a response delay process, requesting that

each ONT/ONU respond with a ranging signal response that the OLT then utilizes to compensate for the delay (i.e., the "response delay process"). *Id.* at ¶196; Ex. 1005, 12:34-60. As discussed in Claim [1.C], the ONT/ONU is configured to transmit, at the command of its CLU, data signals in response to the start time it is allocated by the OLT, which includes the ranging compensation (i.e., "network period"). *Id.*; Ex. 1005, 7:60-8:9, 8:36-47, 12:40-60. The upstream transmission from the ONT/ONU to the OLT is thus aligned to the network period to account for transmission delays.

14. Claim 13

The combination of Shraga and Togami discloses Claim 13. Ex. 1003, ¶¶198-201. Shraga discloses adjusting the operating parameters of the ONTs/ONUs through ranging, as discussed in Claim 13, and additionally discloses using lasers to transmit signals. Ex. 1005, 8:11-14, 12:40-53. A POSITA would have understood that, in referring to the "passive optical network art" known at the time of the patent, Shraga discloses adjusting the transmitting power level of the laser to correspond with a message from the OLT at the head-end of the network. *Id.*; Ex. 1003, ¶¶199-200. A POSITA would have known that different transmission paths between the ONTs/ONUs and the passive optical splitter can experience transmission impairments resulting in different link power penalties, such as losses due to distance

between ONTs/ONUs and the splitter. *Id.*; Ex. 1013, §5.2. Compensating for this difference to align transmissions back to the OLT would be accomplished by adjusting the optical power levels of the transmitters at each ONT/ONU. *Id.*

15. Claim 14

The combination of Shraga and Togami discloses Claim 14. Ex. 1003, ¶¶202-07. Shraga's Figure 7 depicts a schematic diagram of the upstream frame, including payload sections for each channel (in yellow below), which comprises data sent from an ONT/ONU back to the OLT. Ex. 1005, 14:43-15:13, Fig. 7. The overhead and payload sections together have a length determined by the CLU that is less than or equal to the maximum window length received in the pointers section of the downstream OLT transmission (identified as 93 below). *Id.* at 15:26-36; Ex. 1003, ¶203.

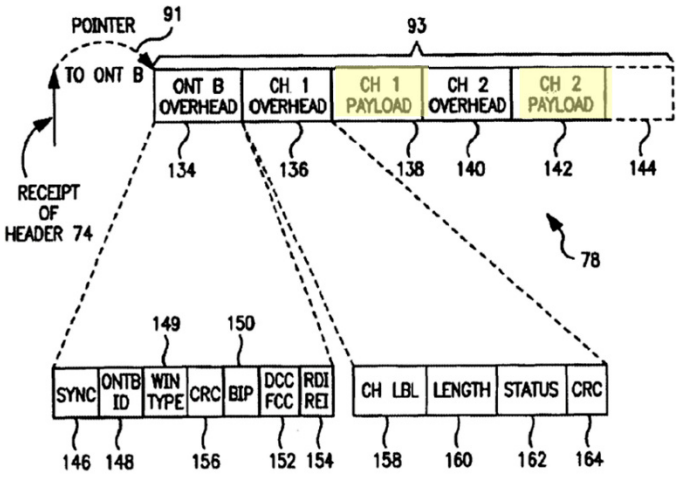

FIG. 7

Ex. 1005, Fig. 7 (annotated).

Shraga additionally describes the construction of the payload section, which consists of the CLU reading data from an ingress FIFO (in yellow below) connected to the switch (i.e., electrical interface discussed in Claim [1.D]) (in red below) to construct the window. Ex. 1003, ¶204; Ex. 1005, 15:26-36, Fig. 1.

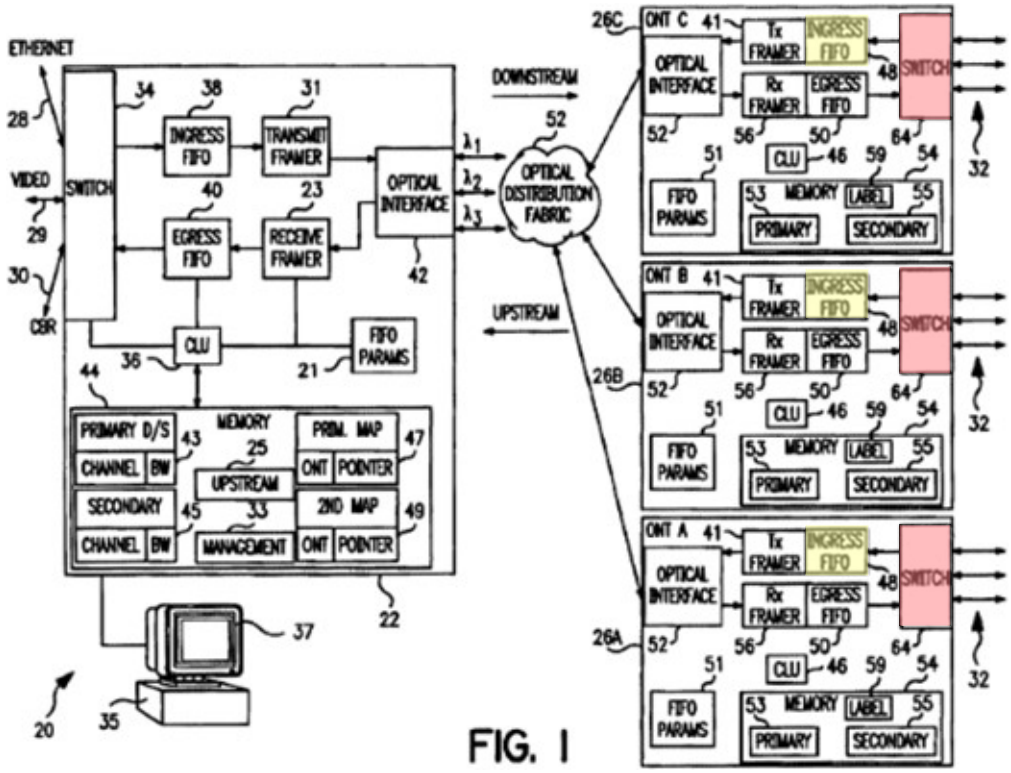

Ex. 1005, Fig. 1 (annotated).

The payload is then transmitted upstream through the process described in Shraga's Figure 6: the CLU checks the ingress FIFO for data to be incorporated into the payload section (in yellow below) before constructing the channel overhead

section and channel payload sections (in red below), which consists of the data read from the ingress FIFO. Ex. 1003, ¶205; Ex. 1005, 9:56-57, 13:48-67, Fig. 6.

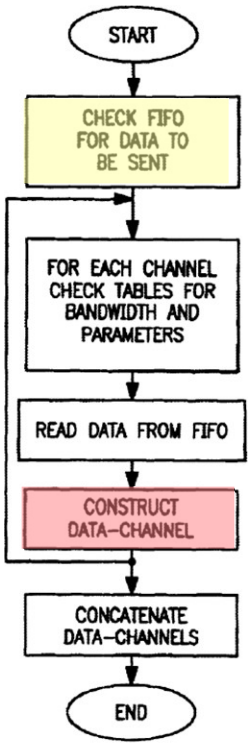

FIG. 6

Ex. 1005, Fig. 6 (annotated).

Shraga thus discloses that the CLU (i.e., control module) is configured to encapsulate data received from the user device via the ingress FIFO (i.e., the data received through the electrical network interface port) into a payload section of the framing protocol for the PON, which could be constructed to any number of protocols or services. Ex. 1003, ¶206; Ex. 1005, 16:43-49.

16. Claim 15

The combination of Shraga and Togami discloses Claim 15. Ex. 1003, ¶¶208-11. Shraga discloses that the optical interface of each ONT/ONU contains a laser for converting data to an optical format. Ex. 1005, 8:10-18, 8:36-43. Likewise, the transceiver module disclosed in Togami contains a laser transmitter circuit capable of opto-electrical conversion and transmission/reception of optical signals. Ex. 1007, 1:40-45. Further, the components listed in Claim 15 were traditional, well-known components of a transceiver at the time. Ex. 1003, ¶210. In fact, the '754 Patent recognizes this, as shown in Figure 11 and discussed in the patent: "[a] typical optical module is composed of a: laser []; laser driver (LD) []; photo detector (PD); transimpedance amplifier (TIA) []; limiting amplifier (LA) []." Ex. 1001, 1:56-62.

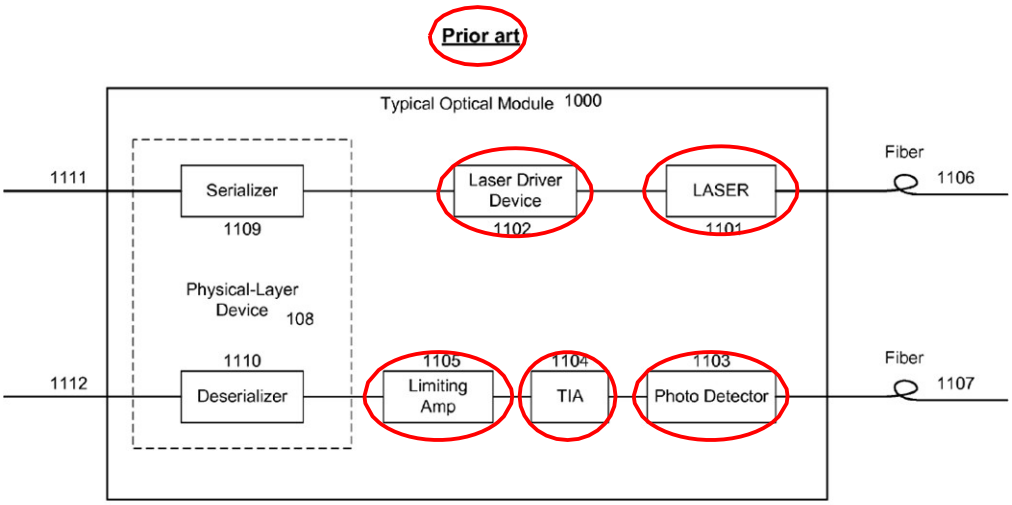

Ex. 1001, Fig. 11 (annotated).

It would have been obvious and well-known to any POSITA that these components would have been necessary to transmit optical data communications across a PON. Ex. 1003, ¶211; Ex. 1013, Fig. 11.7.

17. Claim 16

The combination of Shraga and Togami discloses Claim 16. Ex. 1003, ¶¶212-15. As discussed in Claim [1.pre], Shraga discloses an optical transceiver module that is an ONT/ONU. A POSITA would have understood that an optical transceiver ONT operating in a PON would inherently contain a discrete chip to perform according to standard network protocols, such as framing and ranging protocols described in the G.984.3 Draft Recommendation/Contribution 104, for example, which would require the device contain a TC-Layer discrete chip. Ex. 1003, ¶213; Ex. 1011-1, 1; Ex. 1011-2, 1. A POSITA would have understood that because the MAC protocol is addressed in the G.984.3 Draft Recommendation/Contribution 104, which operates to standardize TC-Layer specifications, a TC-Layer discrete chip would thus contain MAC discrete chip functionalities. *Id.*

Further, the '754 Patent itself states that MAC and TC-Layer functionality are "*needed*" to operate as an ONT/ONU and perform data transmission in a PON; thus a POSITA would have understood that discrete chips for performing such functionalities were necessary. Ex. 1003, ¶214. Therefore, a POSITA would have

understood that the network client optical transceiver module would necessarily contain both a TC-Layer discrete chip as well as a MAC discrete chip, or, alternatively, a TC-Layer discrete chip containing MAC functionality. *Id.*

18. Claim 18

a) [18.pre]

The combination of Shraga and Togami discloses Claim [18.pre] for the same reasons discussed in Claim [1.pre] and Claims [1.A] – [1.E]. Ex. 1003,¶216.

b) [18.A]

The combination of Shraga and Togami discloses Claim [18.A]. Ex. 1003, ¶¶217-19. As discussed in Claim [1.D], Shraga and Togami both disclose an electrical network interface port for communicating with a switch or router. *Id.* at ¶218; Ex. 1005, 7:29-35, 8:10-18, 8:36-43, Fig. 1; Ex. 1007, 1:45-49, 2:45-57, 2:63-3:13, 5:5-20. Additionally, as discussed above in Claim 14, Shraga teaches that the CLU of the optical transceiver module reads data from an ingress FIFO connected to the electrical interface to construct the payload section of its upstream transmission. Ex. 1003, ¶219; Ex. 1005, 9:33-37, 9:56-57, 15:26-36. Therefore, the optical transceiver module is configured to receive data via its electrical interface port connected to a switch or router. *Id.*

c) [18.B]

The combination of Shraga and Togami discloses Claim [18.B]. Ex. 1003, ¶¶220-22. As discussed above in Claim 14, the device taught in Shraga contains an ingress FIFO which operates to receive and store incoming data from an external device, such as a switch, prior to passing said data onto the transmit framer for transmission onto the PON. Ex. 1003, ¶221; Ex. 1005, 8:2-9, 8:36-43, 9:33-37, 9:56-65, Fig. 1.

d) [18.C]

The combination of Shraga and Togami discloses Claim [18.C]. Ex. 1003, ¶¶223-26. As discussed in Claim [1.C], Shraga and Togami disclose a control module configured to receive from the head-end, transmitted in downstream frames, data communications representing start transmission times and maximum window lengths assignments for each ONT/ONU transmitting data upstream. *Id*. at ¶224; Ex. 1005, 9:66-10:13, 10:38-11:6, Fig. 2, Fig. 3. Shraga further teaches that incoming signals are received through the optical interface of each ONT/ONU, which is configured to receive incoming signals and to transmit outgoing signals. Ex. 1003, ¶225; Ex. 1005, 7:60-8:18, 8:36-43, Fig. 1.

e) [18.D]

The combination of Shraga and Togami discloses Claim [18.D]. Ex. 1003, ¶¶227-30. As discussed in Claim [1.B], Shraga discloses an optical interface block configured to perform opto-electrical conversion and connecting each ONT/ONU to the optical distribution fabric via optical fibers. Ex. 1005, 7:60-8:18, 8:36-47, Fig. 1. Shraga teaches that each received optical signal is converted to data, an electrical signal, before transfer to the receive framer. *Id.* Likewise, Togami discloses a transceiver module that is capable of opto-electrical conversion. Ex. 1007, 1:30-45. A POSITA would have therefore understood that Shraga and Togami disclose converting a first optical signal received from the head-end to an electrical signal at the optical interface block. Ex. 1003, ¶228.

Additionally, as discussed in Claim [1.C], Shraga discloses a CLU (i.e., control module) configured to receive signals from the head-end representing start times for transmission of data communications and is configured to transmit ONT/ONU data communications responsive to such start times. *Id.* at ¶229; Ex. 1005, 9:66-10:13, 10:38-11:6, 14:42-57, Fig. 2, Fig. 3, Fig. 7. A POSITA would have understood that Shraga teaches conveying the electrical signal to the control module because the CLU controls data transmission in the network and thus, to transmit data according to specific start times, the CLU would need to receive such

information via the converted electrical signal. *Id.*; Ex. 1005, 7:60-8:9, 8:36-47, 15:26-36, Fig. 7.

f) [18.E]

The combination of Shraga and Togami discloses Claim [18.E]. Ex. 1003, ¶¶231-33. As discussed in Claim [1.E], Shraga teaches that the transmission from the head-end of the network containing the start time allocation is received at the optical interface, converted to an electrical signal, and relayed to the CLU, which controls the transmission of signals to the optical network. *Id.* at ¶232; Ex. 1005, 7:60-8:9, 8:36-47, 10:14-37, 13:24-46. The CLU uses this electrical signal to construct the data transmission in the upstream direction (i.e., "processing" the signal), consisting of an overhead section followed by a payload section in accordance with the constraints prescribed to it by the OLT. Ex. 1005, 14:42-57, 15:26-36, Fig. 7.

g) [18.F]

The combination of Shraga and Togami discloses Claim [18.F]. Ex. 1003, ¶¶234-36. As discussed in Claim [18.B], Shraga teaches an ingress FIFO within each ONT/ONU which operates to store incoming data, in the form of electrical signals, from an external or host device prior to transmission onto the network. *Id.* at ¶235; Ex. 1005, 8:2-9, 8:36-43, 9:33-37, 9:56-65. The ONT/ONU constructs the upstream

transmission window in accordance with the start time and length allocation from the head-end, as discussed in Claims [1.C], 3, and 4, and converts the stored data it intends to transmit into an optical signal at the optical interface for transmission onto the network, as all communications on the network are optical signals. *Id.*; Ex. 1005, 8:10-18, 8:36-43, 14:42-57, 15:26-36, Fig. 7.

h) [18.G]

The combination of Shraga and Togami discloses Claim [18.G]. Ex. 1003, ¶¶237-40. As discussed in Claim [1.C], the combination of Shraga and Togami discloses a control module (CLU) that constructs an upstream transmission window via optical signals in accordance with start transmission times allocated to it by the head-end. Ex. 1005, 14:42-57, 15:26-36, Fig. 2, Fig. 3, Fig. 7. Shraga also teaches an optical interface block connected to an optical interface port configured to receive incoming and transmit outgoing signals to and from the ONT/ONU. *Id.* at 7:60-8:18, 8:36-47, Fig. 1. Specifically, Shraga teaches that the optical interface converts data in the form of the upstream window transmission from the transmit framer to an optical format and transmits the optical signal onto the fabric. *Id.*; Ex. 1003, ¶239.

i) [18.H]

The combination of Shraga and Togami discloses Claim [18.H] for the same reasons discussed in Claim [1.C], [1.D], [18.E], and [18.G]. Ex. 1003, ¶¶241-45.

19. Claim 19[4]

The combination of Shraga and Togami discloses this claim for the same reasons as described in Claim 2. Ex. 1003, ¶246. For the method of Claim 18, *see supra*, §VII.A.18.

20. Claim 20

The combination of Shraga and Togami discloses this claim for the same reasons as described in Claim 3. *Id.* at ¶247. For the method of Claim 18, *see supra*, §VII.A.18.

21. Claim 21

The combination of Shraga and Togami discloses this claim for the same reasons as described in Claim 4. *Id.* at ¶248. For the method of Claim 18, *see supra*, §VII.A.18.

[4] Claims 19-30 are method claims analogous to device claims 2-16 previously discussed *supra*. Thus, the discussion of the respective corresponding device claim is incorporated into and mirrored for the discussion of the parallel method claim.

22. Claim 22

The combination of Shraga and Togami discloses this claim for the same reasons as described in Claim 5. *Id.* at ¶249. For the method of Claim 18, *see supra*, §VII.A.18.

23. Claim 23

The combination of Shraga and Togami discloses this claim for the same reasons as described in Claim 6. *Id.* at ¶250. For the method of Claim 18, see supra, §VII.A.18.

24. Claim 24

The combination of Shraga and Togami discloses this claim for the same reasons as described in Claim 7. *Id.* at ¶251. For the method of Claim 18, see supra, §VII.A.18.

25. Claim 25

The combination of Shraga and Togami discloses this claim for the same reasons as described in Claim 9. *Id*. at ¶252. For the method of Claim 18, *see supra*, §VII.A.18.

26. Claim 26

The combination of Shraga and Togami discloses this claim for the same reasons as described in Claims 11 and 12. *Id.* at ¶253. For the method of Claim 18, *see supra*, §VII.A.18.

27. Claim 27

The combination of Shraga and Togami discloses this claim for the same reasons as described in Claim 13. *Id.* at ¶254. For the method of Claim 18, *see supra*, §VII.A.18.

28. Claim 28

The combination of Shraga and Togami discloses this claim for the same reasons as described in Claim 14. *Id.* at ¶255. For the method of Claim 18, *see supra*, §VII.A.18.

29. Claim 29

The combination of Shraga and Togami discloses this claim for the same reasons as described in Claim 15. *Id.* at ¶256. For the method of Claim 18, see supra, §VII.A.18.

30. Claim 30

The combination of Shraga and Togami discloses this claim for the same reasons as described in Claim 16. *Id.* at ¶257. For the method of Claim 18, see supra, §VII.A.18.

B. Ground 2: Claims 1-16 and 18-30 are Unpatentable Under 35 U.S.C. §103 over Shraga and Togami in view of The G.984.3 Draft Recommendation and/or Contribution 104

1. Motivation to Combine

A POSITA would have been motivated to combine Shraga and Togami for the reasons discussed *supra* §VII.A.1. The G.984.3 Draft Recommendation and Contribution 104, like Shraga and Togami, are directed towards data communications in an optical network. Ex 1011-1, 1; Ex. 1011-2, 1. Specifically, the G.984.3 Draft Recommendation and Contribution 104 disclose a specification for a Gigabit-capable Passive Optical Network Transmission Convergence Layer which teaches a PON system configuration as well as the structure of data communications in a PON, such as framing and ranging. *Id.*; *Id.* at Introduction.

A POSITA would have been motivated to combine the G.984.3 Draft Recommendation/Contribution 104 with the optical transceiver module of Togami and the optical network data communications system of Shraga to create a pluggable optical transceiver module for use in transmitting data communications over a PON for several reasons. Ex. 1003, ¶259.

First, Shraga and the G.984.3 Draft Recommendation/Contribution 104 each describe the same PON system architecture of an OLT connected to multiple ONTs/ONUs via a passive optical splitter and optical fibers, along with the internal

components of ONTs/ONUs. Ex. 1003, ¶260; Ex. 1005, Fig. 1, 7:16-41, Ex. 1011-1, §6.2; Ex. 1011-2, §6.2. Additionally, Shraga and the G.984.3 Draft Recommendation/Contribution 104 each disclose data communication systems within a PON: Shraga discloses a method for data communication from a central point to multiple end points by frames divided into multiple time slots (Ex. 1005, Abstract), and the G.984.3 Draft Recommendation/Contribution 104 describe the framing structure utilized by a PON for upstream and downstream communication between an OLT and multiple ONTs/ONUs. Ex. 1003, ¶261; Ex. 1011-1, §7.4.1; Ex. 1011-2, §7.4.1. Shraga further teaches the use of several concepts involved in the operation of the PON to which the G.984.3 Draft Recommendation/Contribution 104 provide a more in-depth disclosure that would have been necessary for a POSITA implementing Shraga and Togami. Ex. 1003, ¶262. A POSITA would have naturally looked to the G.984.3 Draft Recommendation/Contribution 104 for further direction. *Id.*

Additionally, a POSITA would have naturally looked to the G.984.3 Draft Recommendation, an ITU-T standard recommendation, and Contribution 104, a contribution provided for consideration in standard adoption, to find techniques of data communication in a PON, as discussed in Shraga, because adhering to these documents and their eventual published standard would have provided

interoperability of equipment in an optical network. Ex. 1003, ¶¶265-266. Further, a POSITA would have known that disclosures contained in ITU contributions and draft recommendations would have been technology and techniques developed by industry leaders and key innovators, thus making these documents crucial to the development of optical technology. *Id.* Therefore, a POSITA would have consulted these documents and had a reasonable expectation of success in combining the pluggable optical transceiver module described in Togami with the PON functionalities disclosed in Shraga and further in the G.984.3 Draft Recommendation/Contribution 104. *Id.*

2. Claim 1

a) [1.pre]

The combination of Shraga and Togami in view of the G.984.3 Draft Recommendation/Contribution 104 discloses Claim [1.pre]. Ex. 1003, ¶¶267-71. For the discussion of Shraga and Togami, *see supra* §VII.A.2.a. Additionally, the G.984.3 Draft Recommendation/Contribution 104 disclose a PON system configuration consisting of an OLT (in yellow below), multiple ONUs (in red), an optical splitter (in blue), and optical fibers. Ex. 1011-1, §6.2, Fig. 6-1; Ex. 1011-2, §6.2, Fig. 6-1.

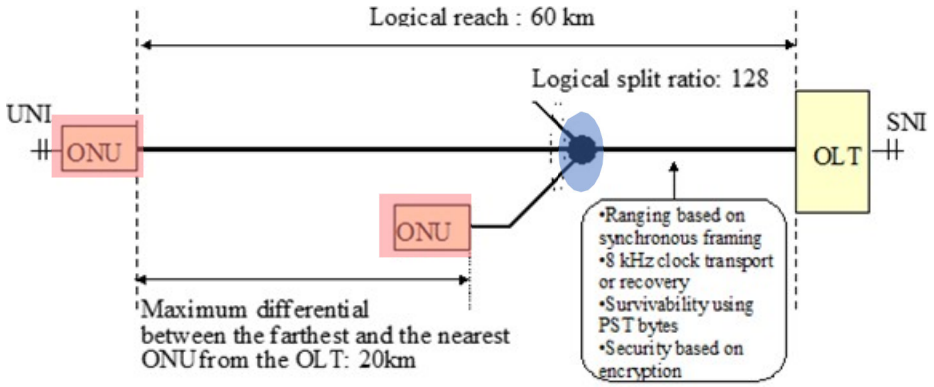

Figure 6-1 – GPON system configuration

Ex. 1011-1, Fig. 6-1; Ex. 1011-2, Fig. 6-1 (annotated).

The G.984.3 Draft Recommendation/Contribution 104 define an ONT/ONU as providing the customer or user-side interface for the optical network and an ONT as providing the network-side interface of the optical network in a Gigabit PON (i.e., the head-end). *Id.* at 3. Ex. 1003, ¶270.

b) [1.A]

The combination of Shraga and Togami in view of the G.984.3 Draft Recommendation/Contribution 104 discloses Claim [1.A]. Ex. 1003, ¶¶272-76. For the discussion of Shraga and Togami, *see supra* §VII.A.2.b. Additionally, the G.984.3 Draft Recommendation/Contribution 104 disclose a functional block diagram of an ONT/ONU containing a "PON interface" which couples directly to the PON via optical fibers. Ex. 1011-1, §6.4.2; Ex. 1011-2, §6.4.2. It would have been obvious to a POSITA that the ONT/ONU would have possessed an optical port

for coupling with fibers to transmit and receive data communications on the PON. Ex. 1003, ¶274.

Further, the G.984.3 Draft Recommendation/Contribution 104 disclose the "GPON Physical Media Dependent (GPM) layer" (in yellow below), which contains the physical components of the PON system. Ex. 1011-1, §7.1, Fig. 7-1; Ex. 1011-2, §7.1, Fig. 7-1. It would have been obvious to a POSITA, in reading the G.984.3 Draft Recommendation/Contribution 104, to look to references discussing the physical layer of the network to understand the needs of the physical components of the PON, such as an optical port. It would have further been obvious to a POSITA, upon referencing such material, that any optical transceiver module on the PON would contain an optical port for coupling to the optical fibers of the network. Ex. 1003, ¶275; Ex. 1022, §8.2.6.3.

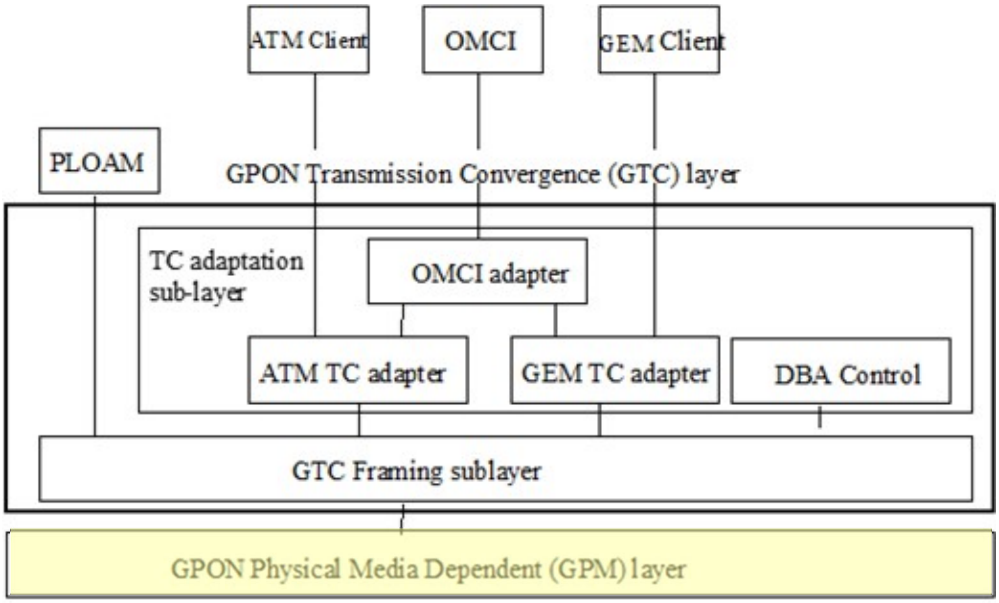

Figure 7-1 – Protocol stack for the GTC system.

Ex. 1011-1, Fig. 7-1; Ex. 1011-2, Fig. 7-1 (annotated).

c) [1.B]

The combination of Shraga and Togami in view of the G.984.3 Draft Recommendation/Contribution 104 discloses Claim [1.B]. Ex. 1003, ¶¶277-82. For the discussion of Shraga and Togami, which fully disclose the claim, *see supra* §VII.A.2.c.

d) [1.C]

The combination of Shraga and Togami in view of the G.984.3 Draft Recommendation/Contribution 104 discloses Claim [1.C]. Ex. 1003, ¶¶283-86. For the discussion of Shraga and Togami, *see supra* §VII.A.2.d. Additionally, the G.984.3 Draft Recommendation/Contribution 104 disclose a framing structure for

downstream and upstream data communications, specifically containing a "StartTime field" which indicates the start time of allocation for an ONT/ONU to begin data transmission. Ex. 1003, ¶285; Ex. 1011-1, §8; Ex.1011-2, §8. The OLT sends pointers which "indicate[] the time at which each ONU may begin and end its upstream transmission." *Id.*; Ex. 1003, ¶285; *Id.*

e) [1.D]

The combination of Shraga and Togami in view of the G.984.3 Draft Recommendation/Contribution 104 discloses Claim [1.D]. Ex. 1003, ¶287-94. For the discussion of Shraga and Togami, which fully disclose the claim, *see supra* §VII.A.2.e.

f) [1.E]

The combination of Shraga and Togami in view of the G.984.3 Draft Recommendation/Contribution 104 discloses Claim [1.E] for the reasons discussed above in Claim [1.pre], [1.C], and [1.D]. Ex. 1003, ¶295.

3. Claim 2

The combination of Shraga and Togami in view of the G.984.3 Draft Recommendation/Contribution 104 discloses Claim 2. Ex. 1003, ¶¶296-99. For the discussion of Shraga and Togami, which fully disclose the claim, *see supra* §VII.A.3.

4. Claim 3

The combination of Shraga and Togami in view of the G.984.3 Draft Recommendation/Contribution 104 discloses Claim 3. Ex. 1003, ¶¶300-03. For the discussion of Shraga and Togami, *see supra* §VII.A.4. Additionally, the G.984.3 Draft Recommendation/Contribution 104 specifically discloses a "StopTime field" which indicates the stopping time (i.e., end time) of the allocation for an ONT/ONU to end data transmission: the "stop time points to the last valid data byte associated with [the] allocation" from the OLT at the head-end. *Id.* at ¶302; Ex. 1011-1, 32; Ex. 1011-2, 31. A POSITA would have understood that this disclosure of a "stop time" transmission from the OLT to each ONT/ONU is identical to the end time disclosed in Claim 3. *Id.*

5. Claim 4

The combination of Shraga and Togami in view of the G.984.3 Draft Recommendation/Contribution 104 discloses Claim 4. Ex. 1003, ¶¶304-08. For the discussion of Shraga and Togami, which fully disclose the claim, *see supra* §VII.A.5.

6. Claim 5

The combination of Shraga and Togami in view of the G.984.3 Draft Recommendation/Contribution 104 discloses Claim 5. Ex. 1003, ¶¶309-11. For the

discussion of Shraga and Togami, which fully disclose the claim, *see supra* §VII.A.6.

7. Claim 6

The combination of Shraga and Togami in view of the G.984.3 Draft Recommendation/Contribution 104 discloses Claim 6. Ex. 1003, ¶¶312-16. For the discussion of Shraga and Togami, which fully disclose the claim, *see supra* §VII.A.7.

8. Claim 7

The combination of Shraga and Togami in view of the G.984.3 Draft Recommendation/Contribution 104 discloses Claim 7. Ex. 1003 a ¶¶317-20. For the discussion of Shraga and Togami, which fully disclose the claim, *see supra* §VII.A.8.

9. Claim 8

The combination of Shraga and Togami in view of the G.984.3 Draft Recommendation/Contribution 104 discloses Claim 8. Ex. 1003, ¶¶321-24. For the discussion of Shraga and Togami, *see supra* §VII.A.9. Additionally, the G.984.3 Draft Recommendation/Contribution 104 discloses a framing protocol, as discussed in Shraga, for downstream and upstream communications, as shown below in Figures 8-1 and 8-2. Ex. 1003, ¶¶322-23; Ex. 1011-1, §8; Ex. 1011-2, §8. A POSITA

would have understood an optical transceiver module in accordance with the G.984.3 Draft Recommendation/Contribution 104 would comprise framing components (i.e., a framing block) to facilitate upstream and downstream communications based on the framing protocol provided in the standard. *Id.*

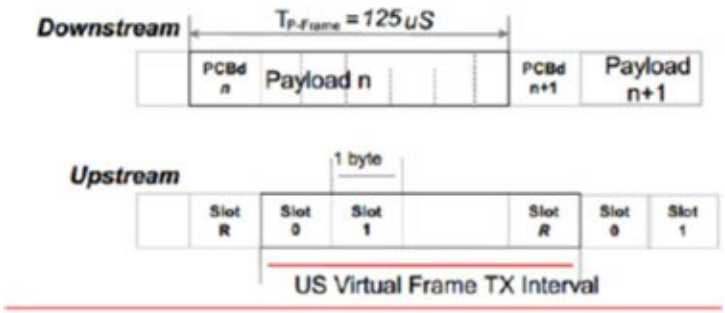

Figure 8-1 – GTC TC frame structure.

Ex. 1011-1, Fig. 8-1; Ex. 1011-2, Fig. 8-1 (annotated).

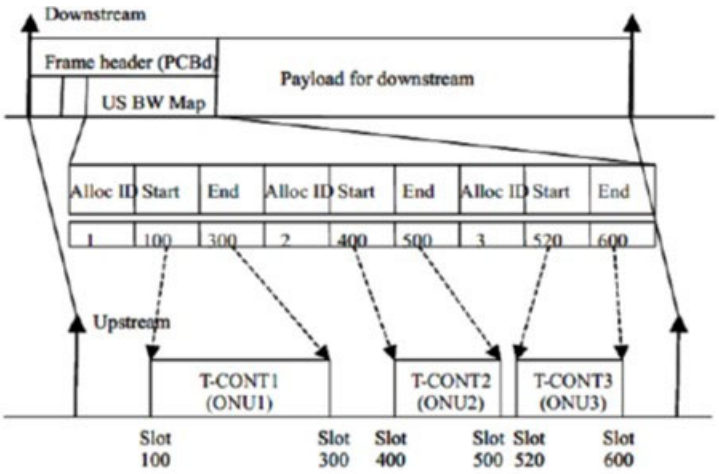

Figure 8-2 – GTC TC media access control concept. [Note: The arrangement of fields in Fig. 8-2 is simplified for sake of illustration. Please refer to the figures below for a complete description of the fields and their function]

Ex. 1011-1, Fig. 8-2; Ex. 1011-2, Fig. 8-2 (annotated).

10. Claim 9

The combination of Shraga and Togami in view of the G.984.3 Draft Recommendation/Contribution 104 discloses Claim 9. Ex. 1003, ¶¶325-30. For the discussion of Shraga and Togami, *see supra* §VII.A.10. Additionally, the G.984.3 Draft Recommendation/Contribution 104 discloses an "Allocation ID field" which indicates the particular ONT/ONU that is being granted time to transmit upstream on the PON. Ex. 1011-1, §8.1.3.6.1; Ex. 1011-2, §8.1.3.6.1. This "Alloc-ID" is unique to each individual ONT/ONU and is assigned by the OLT during the ranging process for the purpose of addressing and allocating communications to each specific network client ONT/ONU. *Id.* A POSITA would have understood that this method consists of the head-end of the network assigning an identification address to transmit and receive data from the ONT/ONU. Ex. 1003, ¶329.

11. Claim 10

The combination of Shraga and Togami in view of the G.984.3 Draft Recommendation/Contribution 104 discloses Claim 10. Ex. 1003, ¶¶331-34. For the discussion of Shraga and Togami, *see supra* §VII.A.11. Additionally, the G.984.3 Draft Recommendation/Contribution 104 disclose that ONTs/ONUs register to the management system of the OLT utilizing either their serial number or a ranging method, which are both initiated and performed under the control of the OLT. Ex.

1011-1, §7.4.2, 10; Ex. 1011-2, §7.4.2, 10. During the ranging process, an OLT periodically initiates ranging to discover any new ONTs/ONUs that have been connected to the network. *Id.*; Ex. 1003, ¶333. Specifically, the ONT/ONU "*responds* to messages, which are initiated in the OLT," identifying itself as a new client on the network. Ex. 1003, ¶333; Ex. 1011-1, §10.2.1; Ex. 1011-2, §10.2.1. Once an ONU is ranged, it is operational on the PON.

12. Claim 11

The combination of Shraga and Togami in view of the G.984.3 Draft Recommendation/Contribution 104 discloses Claim 11. Ex. 1003, ¶¶335-38. For the discussion of Shraga and Togami, *see supra* §VII.A.12. Additionally, the G.984.3 Draft Recommendation/Contribution 104 discuss the presence of delay in transmission over a PON due to the distance between each ONT/ONU and the OLT, which is determined during the ranging process discussed above in Claim 10. Ex. 1011-1, §10.1; Ex. 1011-2, §10.1. The OLT measures the arrival phase of the initial upstream transmission from each ONT/ONU during the ranging process and notifies each ONT/ONU of the delay so it can adjust its transmission phase to the notified value. *Id.*; Ex. 1003, ¶337. A POSITA would have understood that the ranging signal responses of Shraga, coupled with the ranging process of the G.984.3 Draft

Recommendation/Contribution 104, discloses a message from the ONT/ONU control module in response to a delay message from the head-end of the PON. *Id.*

13. Claim 12

The combination of Shraga and Togami in view of the G.984.3 Draft Recommendation/Contribution 104 discloses Claim 12. Ex. 1003, ¶¶339-41. For the discussion of Shraga and Togami, which fully disclose the claim, *see supra* §VII.A.13.

14. Claim 13

The combination of Shraga and Togami in view of the G.984.3 Draft Recommendation/Contribution 104 discloses Claim 13. Ex. 1003, ¶¶342-46. For the discussion of Shraga and Togami, *see supra* §VII.A.14. Additionally, the G.984.3 Draft Recommendation/Contribution 104 discuss the procedure for optical power control in the ONT/ONU. Ex 1011-1, §10.2.2; Ex. 1011-2, §10.2.2. Power control measurements are made by the ONT/ONU to adjust the levels of optical power transmitted by the ONT/ONU to the OLT in the upstream Power Levelling state. *Id.* at §10.2.2.2. This operation adjusts the power level of the transmitter to compensate for the signal lost because of distance between the ONT/ONU and the OLT over which the transmitted optical signal must travel. *Id.* A POSITA familiar with the lasers in the optical transmitter of Shraga and

changing the operating parameters of an ONT/ONU would have known to look to the G.984.3 Draft Recommendation/Contribution 104 for more information on power control measurements and adjusting the power levels in the ONT/ONU at the command of the control module. Ex. 1003, ¶¶344-45.

15. Claim 14

The combination of Shraga and Togami in combination with the G.984.3 Draft Recommendation/Contribution 104 discloses Claim 14. Ex. 1003, ¶¶347-51. For the discussion of Shraga and Togami, *see supra* §VII.A.15. Additionally, the G.984.3 Draft Recommendation/Contribution 104 disclose an "Upstream payload section" (in yellow below) contained within the upstream frame, like that described in Shraga. Ex. 1003, ¶350; Ex. 1011-1, §8.2.6; Ex. 1011-2, §8.2.

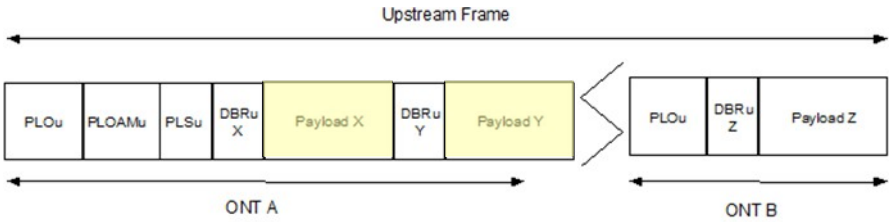

Figure 8-9 – GTC Upstream frame.

Ex. 1011-1, Fig. 8-9; Ex. 1011-2, Fig. 8-9 (annotated).

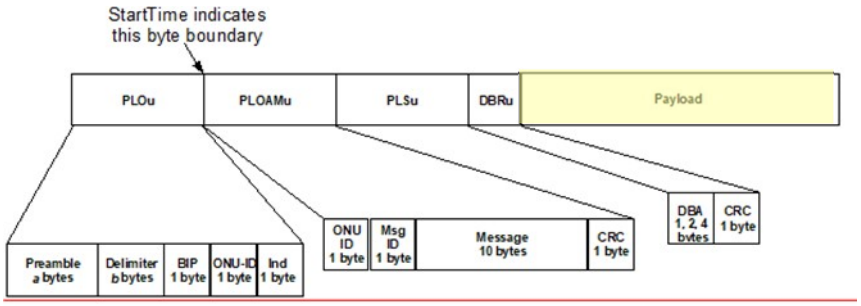

Figure 8-10 – GTC Upstream Overheads Detail.

Ex. 1011-1, Fig. 8-10; Ex. 1011-2, Fig. 8-10 (annotated).

16. Claim 15

The combination of Shraga and Togami in view of the G.984.3 Draft Recommendation/Contribution 104 discloses Claim 15. Ex. 1003, ¶¶352-55. For the discussion of Shraga and Togami, *see supra* §VII.A.16. As discussed previously, the components listed in Claim 15 are traditional components of a transceiver utilized in a data communications system of a PON, as recognized by the '754 Patent itself, which contains Figure 11 (shown below) depicting a "typical optical module" and labeled as prior art. *Id.* at ¶¶354-56; Ex. 1001, 1:56-62, Fig. 11.

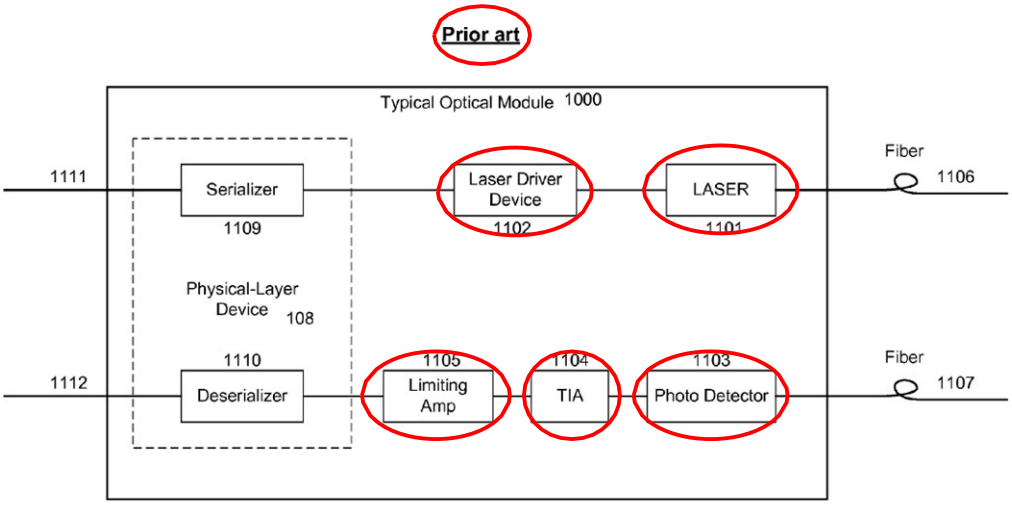

FIG. 11

Ex. 1001, Fig. 11 (annotated).

It would have been obvious to a POSITA that these components would have been necessary to transmit optical data communications in a PON. *Id.*; Ex. 1013, Fig. 11.7.

17. Claim 16

The combination of Shraga and Togami in view of the G.984.3 Draft Recommendation/Contribution 104 discloses Claim 16. Ex. 1003, ¶¶356-59. For the discussion of Shraga and Togami, *see supra* §VII.A.17. Additionally, the G.984.3 Draft Recommendation/Contribution 104 are drafts for the ITU-T standard directed to "Transmission Convergence Layer for Gigabit Passive Optical Networks" (i.e., TC-Layer) and discuss MAC protocol throughout. *See, e.g.*, Ex. 1011-1, §7.4.1; Ex. 1011-2, §7.4.1. It would have been obvious to a POSITA that any transceiver module operating in accordance with the protocol outlined in the G.984.3 Draft

Recommendation/Contribution 104 would necessarily contain a MAC discrete chip as well as TC-Layer discrete chip to perform the functionalities described. Ex. 1003, ¶358. Alternatively, a POSITA would have understood that the functionalities typically contained in a MAC discrete chip could also be integrated fully into the TC-Layer discrete chip, thus invalidating the need for a separate MAC discrete chip.

18. Claim 18

a) [18.pre]

The combination of Shraga and Togami in view of the G.984.3 Draft Recommendation/Contribution 104 discloses this claim for the same reasons as described in Claim [1.pre] and Claims [1.A] – [1.E]. Ex. 1003, ¶360.

b) [18.A]

The combination of Shraga and Togami in view of the G.984.3 Draft Recommendation/Contribution 104 discloses Claim [18.A]. Ex. 1003, ¶¶361-63. For the discussion of Shraga and Togami, which fully disclose the claim, *see supra* §VII.A.18.b.

c) [18.B]

The combination of Shraga and Togami in view of the G.984.3 Draft Recommendation/Contribution 104 discloses Claim [18.B]. Ex. 1003, ¶¶364-66. For the discussion of Shraga and Togami, which fully disclose the claim, *see supra* §VII.A.18.c.

d) [18.C]

The combination of Shraga and Togami in view of the G.984.3 Draft Recommendation/Contribution 104 discloses Claim [18.C]. Ex. 1003, ¶¶367-70. For the discussion of Shraga and Togami, which fully disclose the claim, *see supra* §VII.A.18.d.

e) [18.D]

The combination of Shraga and Togami in view of the G.984.3 Draft Recommendation/Contribution 104 discloses Claim [1.D]. Ex. 1003, ¶¶371-74. For the discussion of Shraga and Togami, which fully disclose the claim, *see supra* §VII.A.18.e.

f) [18.E]

The combination of Shraga and Togami in view of the G.984.3 Draft Recommendation/Contribution 104 discloses Claim [18.E]. Ex. 1003, ¶¶375-77. For the discussion of Shraga and Togami, which fully disclose the claim, *see supra* §VII.A.18.f.

g) [18.F]

The combination of Shraga and Togami in view of the G.984.3 Draft Recommendation/Contribution 104 discloses Claim [18.F]. Ex. 1003, ¶¶378-80. For the discussion of Shraga and Togami, which fully disclose the claim, *see supra* §VII.A.18.g.

h) [18.G]

The combination of Shraga and Togami in view of the G.984.3 Draft Recommendation/Contribution 104 discloses Claim [18.G]. Ex. 1003, ¶¶381-85. For the discussion of Shraga and Togami, which fully disclose the claim, *see supra* §VII.A.18.h.

i) [18.H]

The combination of Shraga and Togami in view of the G.984.3 Draft Recommendation/Contribution 104 discloses Claim [18.H] for the same reasons discussed in Claim [1.C], [1.D], [18.E], and [18.G]. Ex. 1003, ¶¶386-90.

19. Claim 19[5]

The combination of Shraga and Togami in view of the G.984.3 Draft Recommendation/Contribution 104 discloses this claim for the same reasons as described in Claim 2. Ex. 1003, ¶391. For the method of Claim 18, *see supra*, §VII.B.18.

[5] Claims 19-30 are method claims analogous to device claims 2-16 previously discussed *supra.* Thus, the discussion of the respective corresponding device claim is incorporated into and mirrored for the discussion of the parallel method claim.

20. Claim 20

The combination of Shraga and Togami in view of the G.984.3 Draft Recommendation/Contribution 104 discloses this claim for the same reasons as described in Claim 3. *Id.* at ¶392. For the method of Claim 18, *see supra*, §VII.B.18.

21. Claim 21

The combination of Shraga and Togami in view of the G.984.3 Draft Recommendation/Contribution 104 discloses this claim for the same reasons as described in Claim 4. *Id.* at ¶393. For the method of Claim 18, *see supra*, §VII.B.18.

22. Claim 22

The combination of Shraga and Togami in view of the G.984.3 Draft Recommendation/Contribution 104 discloses this claim for the same reasons as described in Claim 5. *Id.* at ¶394. For the method of Claim 18, *see supra*, §VII.B.18.

23. Claim 23

The combination of Shraga and Togami in view of the G.984.3 Draft Recommendation/Contribution 104 discloses this claim for the same reasons as described in Claim 6. *Id.* at ¶395. For the method of Claim 18, *see supra*, §VII.B.18.

24. Claim 24

The combination of Shraga and Togami in view of the G.984.3 Draft Recommendation/Contribution 104 discloses this claim for the same reasons as described in Claim 7. *Id.* at ¶396. For the method of Claim 18, *see supra*, §VII.B.18.

25. Claim 25

The combination of Shraga and Togami in view of the G.984.3 Draft Recommendation/Contribution 104 discloses this claim for the same reasons as described in Claim 9. *Id.* at ¶397. For the method of Claim 18, *see supra*, §VII.B.18.

26. Claim 26

The combination of Shraga and Togami in view of the G.984.3 Draft Recommendation/Contribution 104 discloses this claim for the same reasons as described in Claims 11 and 12. *Id.* at ¶398. For the method of Claim 18, *see supra*, §VII.B.18.

27. Claim 27

The combination of Shraga and Togami in view of the G.984.3 Draft Recommendation/Contribution 104 discloses this claim for the same reasons as described in Claim 13. *Id.* at ¶399. For the method of Claim 18, *see supra*, §VII.B.18.

28. Claim 28

The combination of Shraga and Togami in view of the G.984.3 Draft Recommendation/Contribution 104 discloses this claim for the same reasons as described in Claim 14. *Id.* at ¶400. For the method of Claim 18, *see supra*, §VII.B.18.

29. Claim 29

The combination of Shraga and Togami in view of the G.984.3 Draft Recommendation/Contribution 104 discloses this claim for the same reasons as described in Claim 15. *Id.* at ¶401. For the method of Claim 18, *see supra*, §VII.B.18.

30. Claim 30

The combination of Shraga and Togami in view of the G.984.3 Draft Recommendation/Contribution 104 discloses this claim for the same reasons as described in Claim 16. *Id.* at ¶402. For the method of Claim 18, *see supra*, §VII.B.18.

VIII. DISCRETIONARY ISSUES

A. The Petition Does Not Present the Same References Addressed in Prosecution

The Board should not deny institution under §325(d). Having considered under *Advanced Bionics* the above grounds, the Board already concluded that the art and arguments explained above are not the same or substantially the same as those

previously presented to the Office, and "the circumstances of this case do not warrant the exercise of our discretion under 35 U.S.C. § 325(d)." *Nokia of Am. Corp. v. Alexander Soto et al.*, IPR2023-00960, Paper 19, 31, 35 (PTAB Feb. 23, 2024).

B. The Board Should Not Deny Institution Under *Fintiv*

The claims of the '754 Patent have never been tested in view of the most relevant prior art. In view of these strong challenges and the nascent nature of the current district court proceedings against Petitioners AT&T Corp., AT&T Services, Inc., AT&T Mobility LLC, institution should not be discretionarily denied under §314(a). *See NHK Spring Co. v. Intri-Plex Techs., Inc.*, IPR2018-00752, Paper 8 at 19-20 (PTAB Sept. 12, 2018) (precedential); *Apple v. Fintiv, Inc.*, IPR2020-00019, Paper 11 at 13-14 (PTAB Mar. 20, 2020) (precedential).

Factor 1—potential stay of the district court litigation—is neutral because no party has requested a stay. *VMWare, Inc. v. Intellectual Ventures I LLC*, No. IPR2020-00470, Paper 13 (PTAB Aug. 18, 2020), at 17 (finding in the absence of a stay motion that this factor "does not weigh for or against discretionary denial").

Factor 2—district court trial date and the Board's statutory deadline— should be considered neutral. The earliest estimated trial date for the AT&T Litigation is far in the future as jury selection is not set to begin until at least February 10, 2025. *See* Ex. 1037, 1. The Director also directed the PTAB to consider "statistics on

median time-to-trial for civil actions in the district court in which the parallel litigation resides." Interim Procedure, 8-9. The median time-to-trial in the Eastern District of Texas is 21.0 months (Ex. 1033, 35), which also gives a trial date of no earlier than March 2025, which is roughly one month after the final written decision in IPR2023-00960. Because much can change in twelve months, the current trial date does not support denial. *See Dish Network v. Broadband iTV*, IPR2020-01280, Paper 17 at 16 (PTAB Feb. 4, 2021) ("We cannot ignore the fact that the currently scheduled trial date is more than nine months away and much can change during this time"). The scheduled trial date is approximately the same as the deadline for a final written decision, which is highly likely to precede the actual trial date by at least one month based on the medial time-to-trial. Additionally, the Board has already instituted IPR2023-00960 and will therefore issue a final written decision regardless. As such, this factor weighs in favor of institution or is, at worst, neutral.

Factor 3—investment in the district court proceedings—weighs against discretionary denial. The associated district court case is still in the very early stages of litigation: discovery is still in the preliminary stages; Petitioners only recently, in November 2023, filed their invalidity contentions; and Claim Construction is not scheduled until August 2024. Ex. 1037, 3. Moreover, it is unlikely that a claim

construction order in the AT&T Litigation[6] will issue prior to the PTAB's projected institution decision date. Accordingly, the briefing in IPR2023-00960 will, in any event, be completed before the district court invests significant resources or issues substantive orders in the AT&T Litigation. *See Fintiv*, IPR2020-00019, Paper 11 at 9-12. Regardless, Petitioners diligently prepared this Petition and is filing within the 30 day period for joinder following institution of IPR2023-00960, and well in advance of Petitioners' 12-month statutory deadline. As such, this factor weighs against denying institution.

Factor 4—overlap in the parallel proceedings—favors institution. Instituting trial will allow issues to be narrowed in the district court because the final written decision would issue prior to the district court trial. 35 U.S.C. § 315(e)(2). Given the lack of overlap between the proceedings, this factor weighs against the Board exercising discretion to deny.

Factor 5—overlapping parties—is neutral as it is "far from an unusual circumstance that a petitioner in [IPR] … and a defendant in a parallel district court

[6] As noted above, the district court did issue a claim construction order in the Nokia Litigation, but that order only addressed the '754 Patent to the extent of concluding that three terms were not means-plus-function terms.

proceeding are the same." *Sand Revolution II LLC v. Continental Intermodal Group-Trucking LLC*, IPR2019-01393, Paper 24, 12-13 (PTAB June 16, 2020).

Factor 6—other considerations—weighs against discretionary denial. The merits of the Petition are strong; the same grounds have already been instituted in IPR2023-00960. Outside of IPR2023-00960, to which Petitioners request joinder via concurrent motion, the grounds asserted herein have not previously been considered by either the Office or the district courts. *Cf. Comcast Cable Commn's, LLC v. Rovi Guides, Inc.*, IPR2019-00231, Paper 14 at 11 (PTAB May 20, 2019) (obviousness challenges not "previously considered by the Office or any court" weigh in favor of not denying institution). Moreover, the '754 Patent is currently asserted in multiple district court cases. Institution of this IPR provides the opportunity for narrowing and simplifying the litigations for the district court.

Accordingly, the Board should institute trial.

C. The Board Should Not Deny Institution Under *General Plastic*

The *General Plastic* factors do not apply for several reasons. First, this is the first and only *inter partes* review ("IPR") petition filed by Petitioners with respect to the '754 Patent. As noted in Section IV.E, the '754 Patent was challenged in an IPR filed by II-VI Incorporated (IPR2021-01495), with which the Petitioner had no involvement, and which was voluntarily terminated prior to institution. There is no

overlap between the art relied on herein and that relied upon in the II-VI Incorporated IPR. Second, because the II-VI Incorporated IPR was voluntarily terminated and the Board did not substantively address the merits of the prior petition, any concerns of serial petitions are largely outweighed by the benefits to the patent system of improving patent quality by reviewing the merits of the challenges raised in this petition, which have not been addressed to date. *Code200, UAB v. Bright Data, Ltd.*, IPR2022-00861, Paper 18, 5-6 (PTAB Aug. 23, 2022) (precedential).

Further, Nokia supplies to AT&T certain of the Accused Products in the AT&T Litigation, into which Nokia has intervened. Ex. 1036 at 1-2. Given that relationship and, even though Petitioners had no involvement in Nokia's preparation and filing of the petition in IPR2023-00960, if Petitioners were to pursue an IPR Petition with new grounds, Patent Owner would inevitably argue that Petitioners are RPIs or privies of Nokia and thus subject to the limitations of 35 U.S.C. § 315(b). Instituting and joining this serves the interests of justice and efficiency by ensuring Petitioners can pursue the grounds herein—even if Nokia settles—without forcing the parties and the Board to invest resources on § 315(b) arguments.

IX. CONCLUSION

Petitioner respectfully requests cancellation of the Challenged Claims.

X. MANDATORY NOTICES UNDER 37 C.F.R. §42.8

A. Real Party in Interest (37 C.F.R. §42.8(b)(1))

The real parties in interest are AT&T Corp., AT&T Services, Inc., AT&T Mobility LLC, all of which are subsidiaries of AT&T Inc. (NYSE:T).

B. Related Matters (37 C.F.R. §42.8(b)(2))

Pursuant to 37 C.F.R. §42.8(b)(2), Petitioner is aware of the following lawsuits or related matters involving the '754 Patent:

- *NextGen Innovations, LLC v. AT&T Services, Inc. et al.*, 2:23-cv-00263 (E.D. Tex., filed June 1, 2023) ("the AT&T Litigation");
- *Nokia of America Corporation v. Alexander Soto et al.*, IPR2023-00960 (instituted) ("the Nokia IPR");
- *NextGen Innovations, LLC v. Fujitsu Network Communications, Inc. et al.*, 2:22-cv-00307 (E.D. Tex., filed Aug. 9, 2022) (dismissed as to Fujitsu);
- *NextGen Innovations, LLC v. Nokia of America Corporation, et al.*, 2:22-cv-00309 (E.D. Tex., filed Aug. 9, 2022) (previously consolidated with 2:22-cv-00307 (E.D. Tex); now consolidated with 2:23-cv-00637);
- *NextGen Innovations, LLC v. II-VI, Inc. et al*, 4:21-cv-07477 (N.D. Cal., filed Sep. 24, 2021) (dismissed);

- *II-VI, Inc. v. Alexander Soto et al.*, IPR2021-01495 (PTAB, filed Sep. 10, 2021) (terminated prior to institution); and
- *NextGen Innovations, LLC v. II-VI, Inc. et al*, 4-20-cv-00854 (E.D. Tex., filed Oct. 30, 2020) (transferred).

C. Designation of Counsel (37 C.F.R. §42.8(b)(3))

Petitioners provide the following designation of counsel.

Lead Counsel	Backup Counsel
Eagle H. Robinson Reg. No. 61,361	Daniel S. Leventhal Reg. No. 59,576

D. Service Information (37 C.F.R. §42.8(b)(4))

Lead Counsel	Backup Counsel
Eagle H. Robinson Norton Rose Fulbright US LLP 98 San Jacinto Blvd., Ste. 1100 Austin, TX 78746 512.536.3083 (telephone) 512.536.4598 (facsimile) eagle.robinson@nortonrosefulbright.com	Daniel S. Leventhal Norton Rose Fulbright US LLP Fulbright Tower 1301 McKinney Street, Ste. 5100 Houston, TX 77010 713.651.8360 (telephone) 713.651.5246 (facsimile) daniel.leventhal@nortonrosefulbright.com

Petitioners consent to electronic service.

Date: March 22, 2024

By: /Eagle H. Robinson/

Eagle H. Robinson
Reg. No. 61,361

Lead Counsel for Petitioners

CLAIMS APPENDIX

Claim	Recitation
[1.Pre]	A network client optical transceiver module for a passive optical network, the passive optical network having one or more passive optical splitters for coupling the network client optical transceiver module over one or more optical fibers to the head end of the passive optical network and the network client optical transceiver module having a pluggable form-factor and configured to removably couple to an optical module port of a switch or router, the network client optical transceiver comprising:
[1.A]	an optical port configured to optically couple to one or more optical fibers of the passive optical network having one or more passive optical splitters;
[1.B]	a bi-directional optical interface block optically coupled to the optical port and configured to perform optical-to-electrical and electrical-to-optical signal conversion;
[1.C]	a control module electrically coupled to the bi-directional optical interface block and configured to receive from the head end of the passive optical network data communications representing one or more start times for transmitting data communications to the head end of the passive optical network and configured to transmit the data communications to the head end of the passive optical network responsive to the start times; and
[1.D]	an electrical network interface port electrically coupled to the control module and for electrically coupling into the optical module port of the switch or router and for communicating with the switch or router; whereby
[1.E]	the network client optical transceiver module is configured to optically communicate with the head end of the passive optical network responsive to start times for transmitting data communications to the head end of the passive optical network and the network client optical transceiver module is configured to removably couple to the optical module port of the switch or router and electrically communicate with the switch or router.

CLAIMS APPENDIX

Claim	Recitation
2	The network client optical transceiver module of claim 1, wherein the pluggable form-factor of the network client optical transceiver module is selected form the group consisting essentially of: Small Form-factor Pluggable (SFP); 10 Gigabit Small Form-factor (XFP); XENPAK; X2; XPAK.
3	The network client optical transceiver module of claim 1, wherein the control module is configured to receive from the head end of the passive optical network data communications representing one or more end times for transmitting data communications to the head end of the passive optical network and the control module is configured to end transmissions to the head end of the passive optical network response to the end times.
4	The network client optical transceiver module of claim 1, wherein the control module is configured to receive from the head end of the passive optical network data communications representing one or more lengths of times respectively to the start times for transmitting data communications to the head end of the passive optical network and the control module is configured to transmit to the head end of the passive optical network response to the lengths of times.
5	The network client optical transceiver module of claim 1, wherein the optical port is adapted to optically couple to one or more optical fibers selected from the group consisting of: Multimode optical fibers; and Single mode optical fibers.

CLAIMS APPENDIX

Claim	Recitation
6	The network client optical transceiver module of claim 1, wherein the optical port includes one or more optical fiber connectors and the optical fiber connectors are selected from the group consisting essentially of: Subscriber Connector (SC); Lucent Connector (LC); Fiber Channel (FC); Straight TP (ST); and Miniature Unit (MU).
7	The network client optical transceiver module of claim 1, wherein the electrical network interface port includes an interface selected from the group consisting essentially of: A serial interface; A parallel interface; and A XAUI interface.
8	The network client optical transceiver module of claim 1, wherein the network client optical transceiver module includes a framing block electrically coupled to the bi-directional optical interface block and the control module is electrically coupled to the framing block and wherein the framing block is configured for framing data communications for transmission in accordance with a framing protocol for the passive optical network.
9	The network client optical transceiver of claim 1, wherein the control module is configured to receive from the head end of the passive optical network an assigned network identification address and wherein the assigned network identification address can be used for receiving data addressed to the network client optical transceiver module.
10	The network client optical transceiver of claim 1, wherein the control module is configured to respond to the head end of the passive optical network responsive to a network operating protocol for new clients.

CLAIMS APPENDIX

Claim	Recitation
11	The network client optical transceiver module of claim 1, wherein the control module is configured to respond to a response delay message from the head end of the passive optical network, wherein the response delay message is used to determine the delay in responses from the network client optical transceiver module.
12	The network client optical transceiver module of claim 1, wherein the control module is configured to align data communication transmissions with the network period of the optical network to account for transmission delays responsive to a response delay process.
13	The network client optical transceiver module of claim 1, wherein the control module is configured to adjust the transmitting optical power level responsive to a message received from the head end of the passive optical network.
14	The network client optical transceiver module of claim 1, wherein the control module is configured to encapsulate at least a portion of the data received through the electrical network interface port into a payload section of a framing protocol for the passive optical network.
15	The network client optical transceiver module of claim 1, wherein the network client optical transceiver module includes one or more of the following: A laser; A laser driver; A photodiode; A transimpedance amplifier; and A limiting amplifier.
16	The network client optical transceiver module of claim 1, wherein the network client optical transceiver module is an optical network terminal (ONT) and includes a discrete chip selected from the group consisting essentially of: A media access controller (MAC) discrete chip; and A transmission convergence layer (TC-Layer) discrete chip.

CLAIMS APPENDIX

Claim	Recitation
[18.pre]	A network client optical transceiver module for a passive optical network: the passive optical network having one or more passive optical splitters for coupling the network client optical transceiver module over one or more optical fibers to the head end of the passive optical network and the network client optical transceiver module having a pluggable form-factor and configured to removably couple to an optical module port of a switch or router, and the network client optical transceiver module having an optical port to one or more optical fibers of the passive optical network, and the network client optical transceiver module having an optical interface block and for communicating with the head end of the passive optical network, and the network client optical transceiver module having an electrical network interface port electrically coupled to the control module and for electrically communicating to the switch or router, a method of communicating with the head end of a passive optical network from the network client optical transceiver module comprising the steps of:
[18.A]	(a) receiving data from the switch or router through the electrical network interface port of the network client optical transceiver module;
[18.B]	(b) storing the received data inside the network client optical transceiver module;
[18.C]	(c) receiving a first optical signal from the head end of the passive optical network through the optical port at the optical interface block of the network client optical transceiver module;
[18.D]	(d) converting the first optical signal to an electrical signal at the optical interface block and conveying the electrical signal to the control module of the network client optical transceiver module;
[18.E]	(e) processing the electrical signal at the control module to determine one or more start times for data transmissions from the network client optical transceiver module to the head end of the passive optical network;
[18.F]	(f) converting a portion of the stored received data to a second optical signal; and

CLAIMS APPENDIX

Claim	Recitation
[18.G]	(g) transmitting the second optical signal from the optical interface block through the optical port responsive to the one or more start times for data transmissions to the head end of the passive optical network; whereby
[18.H]	the network client optical transceiver module optically communicates with the head end of the passive optical network responsive to start times for data transmissions and the network client optical transceiver module electrically communicates with the switch or router.
19	The method of claim 18, wherein the pluggable form-factor of the network client optical transceiver module is selected form the group consisting essentially of: Small Form-factor Pluggable (SFP); 10 Gigabit Small Form-factor (XFP); XENPAK; X2; XPAK.
20	The method of claim 18, further comprising the steps of: (e1) processing the electrical signal at the control module to determine one or more end times for data transmissions from the network client optical transceiver module to the head end of the passive optical network; and (g1) terminating the transmission of the second optical signal responsive to an end time for data transmissions to the head end of the passive optical network.
21	The method of claim 18, further comprising the steps of: (e1) processing the electrical signal at the control module to determine one or more lengths of time respective to the start times for data transmissions from the network client optical transceiver module to the head end of the passive optical network; and (g1) transmitting the second optical signal responsive to a length of time for data transmissions to the head end of the passive optical network.

CLAIMS APPENDIX

Claim	Recitation
22	The method of claim 18, wherein the optical port is adapted to optically couple to one or more optical fibers selected from the group consisting of: Multimode optical fibers; and Single mode optical fibers.
23	The network client optical transceiver module of claim 1, wherein the optical port includes one or more optical fiber connectors and the optical fiber connectors are selected from the group consisting essentially of: SC; LC; FC; ST; and MU.
24	The method of claim 18, wherein the electrical network interface port includes an interface selected from the group consisting essentially of: A serial interface; A parallel interface; and A XAUI interface.
25	The method of claim 18, further comprising the steps of: (e1) processing the electrical signal at the control module to determine an assigned network identification address from the head end of the passive optical network for addressing data to the network client optical transceiver module at the control module.
26	The method of claim 18, further comprising the steps of: (g1) adjusting the transmission of the second optical signal form the optical interface block through the optical port to account for the response delay of the optical transceiver module.
27	The method of claim 18, further comprising the steps of: (e1) processing the electrical signal at the control module to determine an optical power level and adjusting the transmit optical power level of the network client optical transceiver module to the determined optical power level.

CLAIMS APPENDIX

Claim	Recitation
28	The method of claim 18, further comprising the steps of: (f1) encapsulating a portion of data received through the electrical network interface port into the payload section of a framing protocol for the passive optical network at the control module for conveyance to the optical interface block.
29	The method of claim 18, wherein the network client optical transceiver module includes one or more of the following: A laser; A laser driver; A photodiode; A transimpedance amplifier; and A limiting amplifier.
30	The method of claim 18, wherein the network client optical transceiver module is an optical network terminal (ONT) and includes a discrete chip selected from the group consisting essentially of: A MAC discrete chip; and A TC-Layer discrete chip.

CERTIFICATION UNDER 37 C.F.R. §42.24

Petitioner certifies that the word count in this Petition is 13,828 words, as counted by the word-processing program (Microsoft Word) used to generate this Petition, where such word count excludes the table of contents, table of authorities, table of exhibits, mandatory notices, certificate of service, claims appendix, and this certificate of word count. This Petition is in compliance with the 14,000-word limit set in 37 C.F.R. §42.24(a)(1)(i).

Date: March 22, 2024

/Eagle H. Robinson/
Eagle H. Robinson (Reg. No. 61,361)

CERTIFICATE OF SERVICE

Pursuant to 37 C.F.R. §§42.6(e), 42.105, the undersigned hereby certifies that true and correct copies of the above-captioned PETITION FOR INTER PARTES REVIEW OF U.S. PATENT NO. 8,238,754, all associated exhibits, Petitioners' Power of Attorney, and Petitioners' MOTION FOR JOINDER TO IPR2023-00960 were served in their entireties on March 22, 2024, upon the Patent Owner at the correspondence address of record for the subject patent as listed on the USPTO's Patent Center via USPS Priority Mail Express®:

ALEXANDER SOTO
5348 Vegas Dr. #396
Las Vegas, NV 89108

Courtesy copies of the same documents are also being sent to litigation counsel for Patent Owners' exclusive licensee, NextGen Innovations, LLC, via email at:

Andrew D. Weiss (aweiss@raklaw.com)
Benjamin T. Wang (bwang@raklaw.com)
Irene Y. Lee (ilee@raklaw.com)
Paul A. Kroeger (pkroeger@raklaw.com)
Qi Peter Tong (ptong@raklaw.com)
rak_nextgen@raklaw.com
Andrea L. Fair (andrea@wsfirm.com)
Charles Everingham, IV (ce@wsfirm.com)
Claire Abernathy Henry (claire@wsfirm.com)

Date: March 22, 2024

/Eagle H. Robinson/
Eagle H. Robinson (Reg. No. 61,361)