US005769899A

United States Patent [19]

Schwartz et al.

[11] **Patent Number: 5,769,899**

[45] **Date of Patent: Jun. 23, 1998**

[54] **CARTILAGE REPAIR UNIT**

[75] Inventors: **Robert Elliott Schwartz**, Old Westbury; **Daniel Anthony Grande, Jr.**, Seacliff, both of N.Y.

[73] Assignee: **Matrix Biotechnologies, Inc.**, Melville, N.Y.

[21] Appl. No.: **698,468**

[22] Filed: **Aug. 15, 1996**

Related U.S. Application Data

[63] Continuation of Ser. No. 289,387, Aug. 12, 1994, abandoned.

[51] **Int. Cl.**[6] **A61F 2/30**

[52] **U.S. Cl.** **623/18**; 623/16

[58] **Field of Search** 623/11, 13, 16, 623/18; 606/77, 154, 230; 424/426, 428

[56] **References Cited**

U.S. PATENT DOCUMENTS

3,745,590	7/1973	Stubstad .	
4,055,862	11/1977	Farling .	
4,205,400	6/1980	Shen et al. .	
4,502,161	3/1985	Wall .	
4,604,097	8/1986	Graves, Jr. et al.	623/11
4,609,551	9/1986	Caplan et al.	424/95
4,627,853	12/1986	Campbell et al. .	
4,655,777	4/1987	Dunn et al.	623/16
4,796,603	1/1989	Dahlke et al.	128/899
4,808,185	2/1989	Penenberg et al. .	
4,846,835	7/1989	Grande .	
4,880,429	11/1989	Stone .	
4,904,259	2/1990	Itay	623/16
4,963,489	10/1990	Naughton et al. .	
5,067,964	11/1991	Richmond et al. .	
5,084,050	1/1992	Draenart	606/77
5,084,051	1/1992	Törmälä et al.	606/77
5,123,927	6/1992	Duncan et al. .	
5,176,710	1/1993	Hahn et al. .	
5,197,985	3/1993	Caplan et al. .	
5,263,987	11/1993	Shah .	
5,270,300	12/1993	Hunziker	514/12
5,306,311	4/1994	Stone et al.	623/18
5,360,450	11/1994	Giannini	623/21

FOREIGN PATENT DOCUMENTS

2612392	9/1988	France	606/77

OTHER PUBLICATIONS

"Surgical Technique For Suretac," Brochure of Acufex Microsurgical (1991).

Pagani, M.J., et al. "Arthroscopic Shoulder Stabilization," Operative Techniques in Sports Medicine, 1, 4 (Cot. 1993) pp,. 276–284.

Stuart, M.J., "Treatment of Chronic Chondral Injuries," Sports Medicine and Arthroscopic Review, 2, 50–58 (1994).

Warner, J.J.P., et al., "Anthroscopic Bankart Repair . . .," Operative Techniques in Orthopaedics, 1, 2 (Apr. 1991), pp. 192–198.

"Bioabsorable . . . from Acufex," 1 page Advertisement (1990).

Primary Examiner—Michael J. Milano

Attorney, Agent, or Firm—Amster, Rothstein & Ebenstein

[57] **ABSTRACT**

A bio-absorbable cartilage repair system for regenerating damaged or destroyed articular cartilage on the surface of a bone by establishing a chondrogenic growth-supporting matrix between an area of removed damaged or destroyed articular cartilage and the adjacent healthy cancellous bone. The system is at least one assembly of a bio-absorbable delivery unit, configured and dimensioned to be mounted in both the removed area and the adjacent healthy area, and a porous bio-absorbable insert supported by and in the delivery unit and establishing communication between the removed area and the adjacent healthy area for a chondrogenic growth-supporting matrix. The insert preferably includes a repair factor (e.g., a growth factor, an attachment factor, or both) releasably disposed in the insert to assist in establishing the chondrogenic growth-supporting matrix.

42 Claims, 4 Drawing Sheets

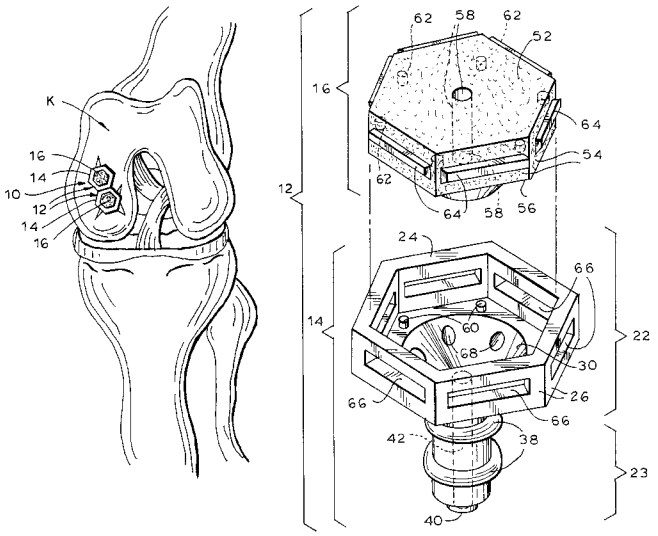

FIG. 1

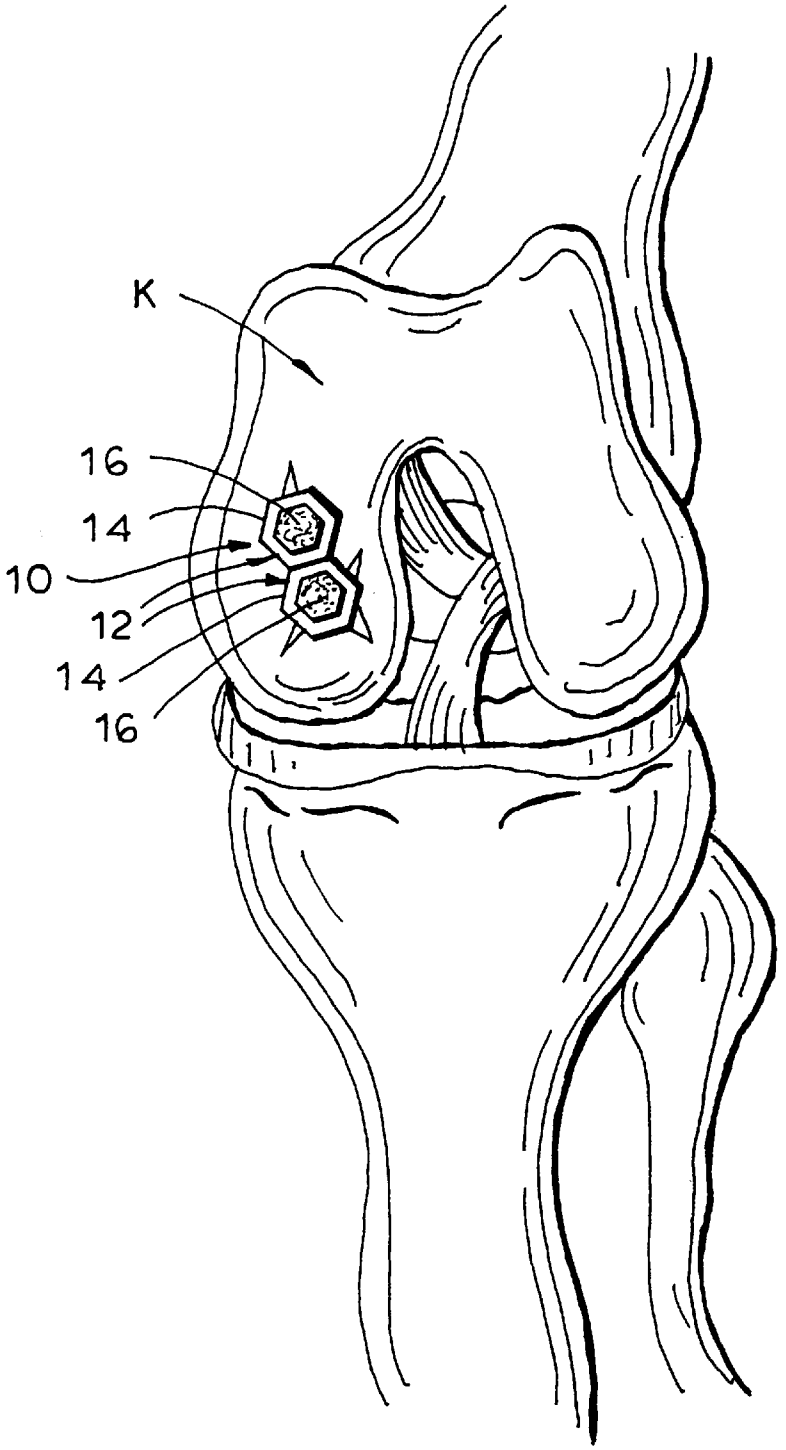

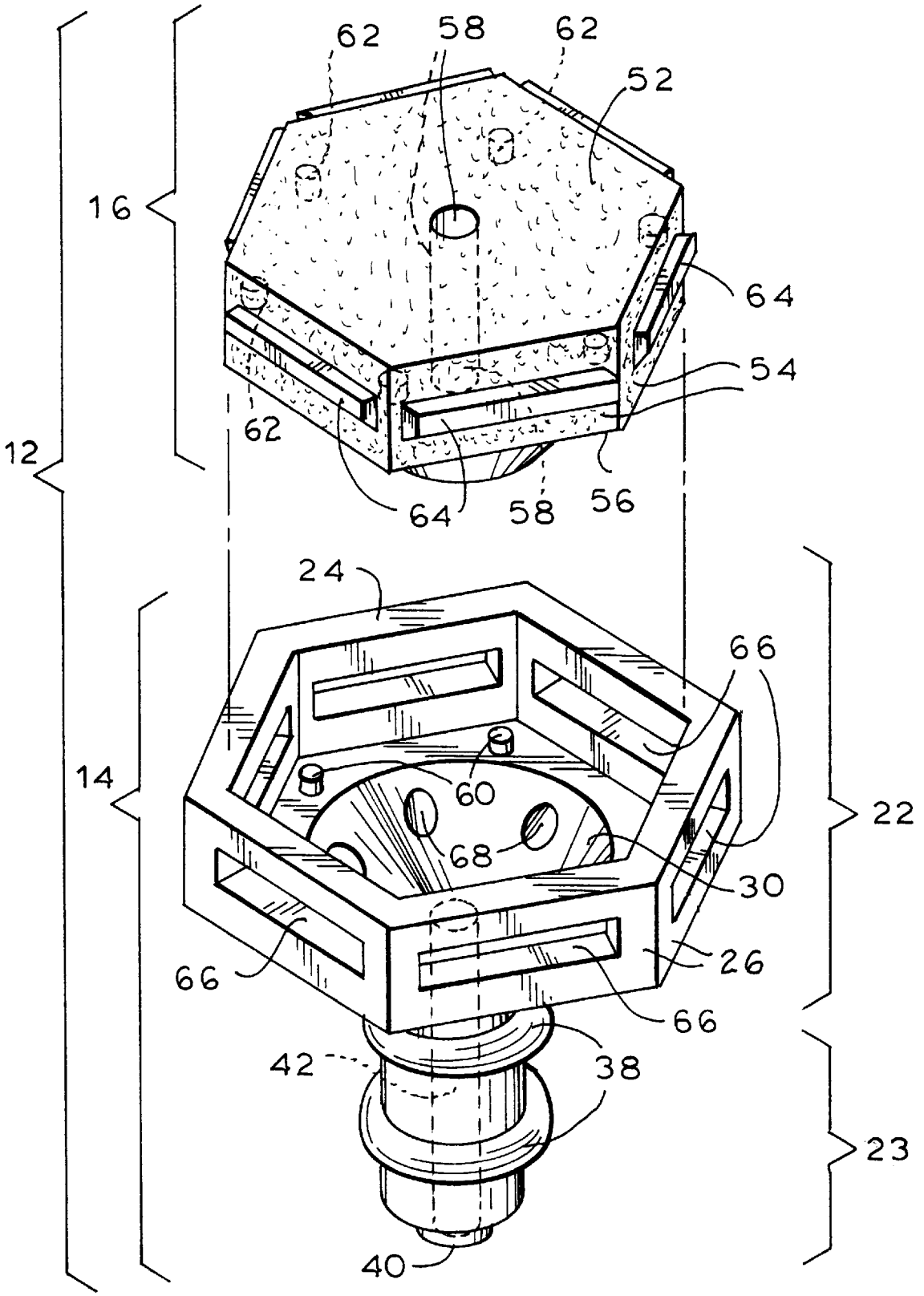
62
58
62
52
16
64
54
62
12
64
58
56
24
66
14
60
22
68
30
66
26
66
42
38
23
40

FIG. 2

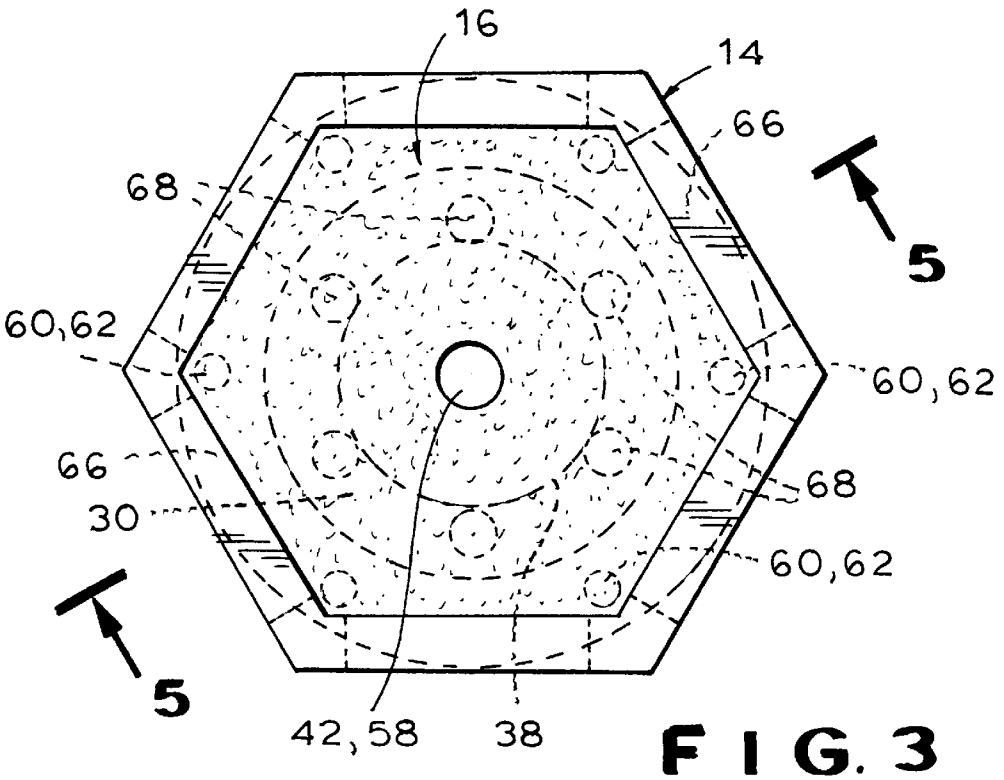
16
14
66
68
5
60,62
60,62
66
68
30
60,62
5
42,58
38

FIG. 3

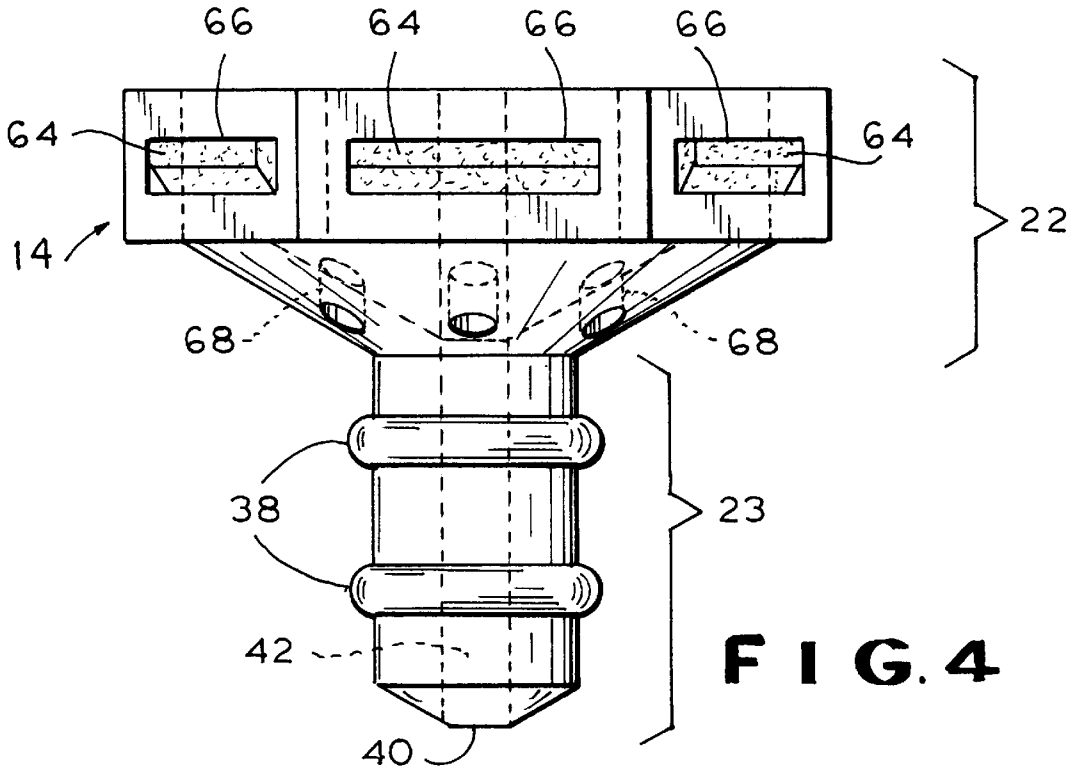
66
64
66
66
64
64
22
14
68
68
38
23
42
40

FIG. 4

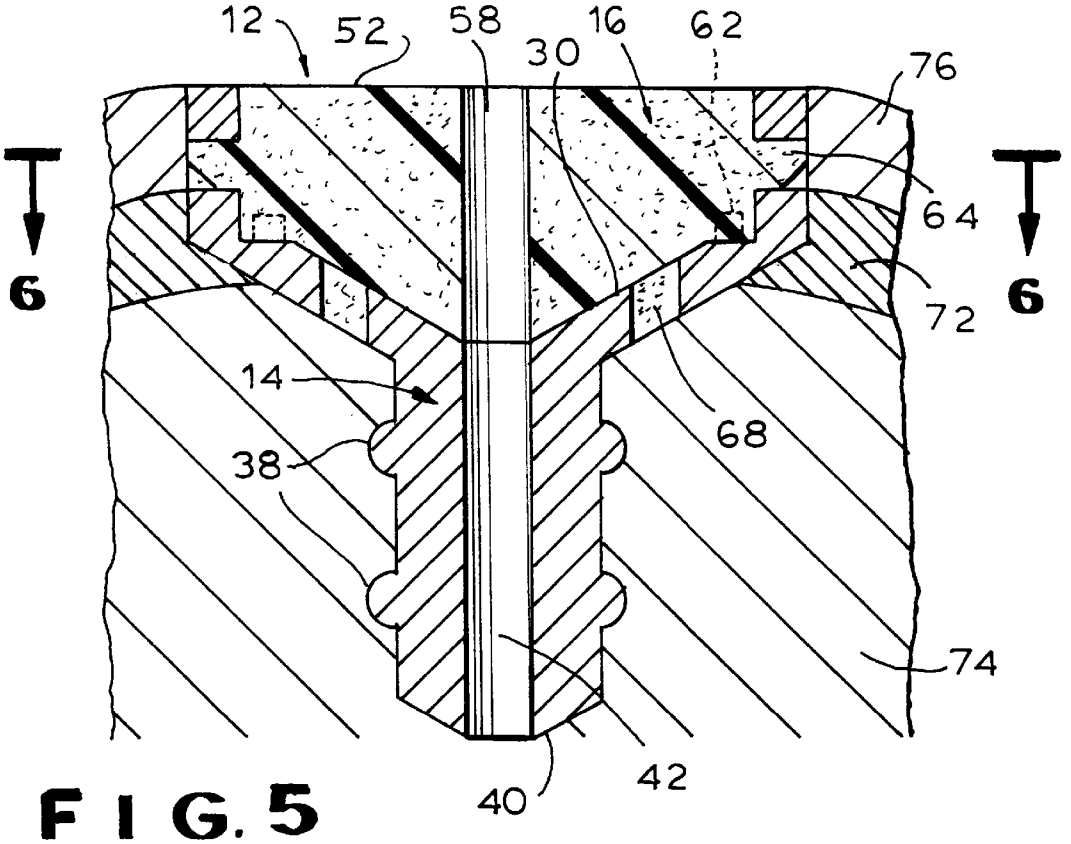
12
52
58
30
16
62
76
64
6
6
72
14
68
38
74
40
42

FIG. 5

FIG. 6

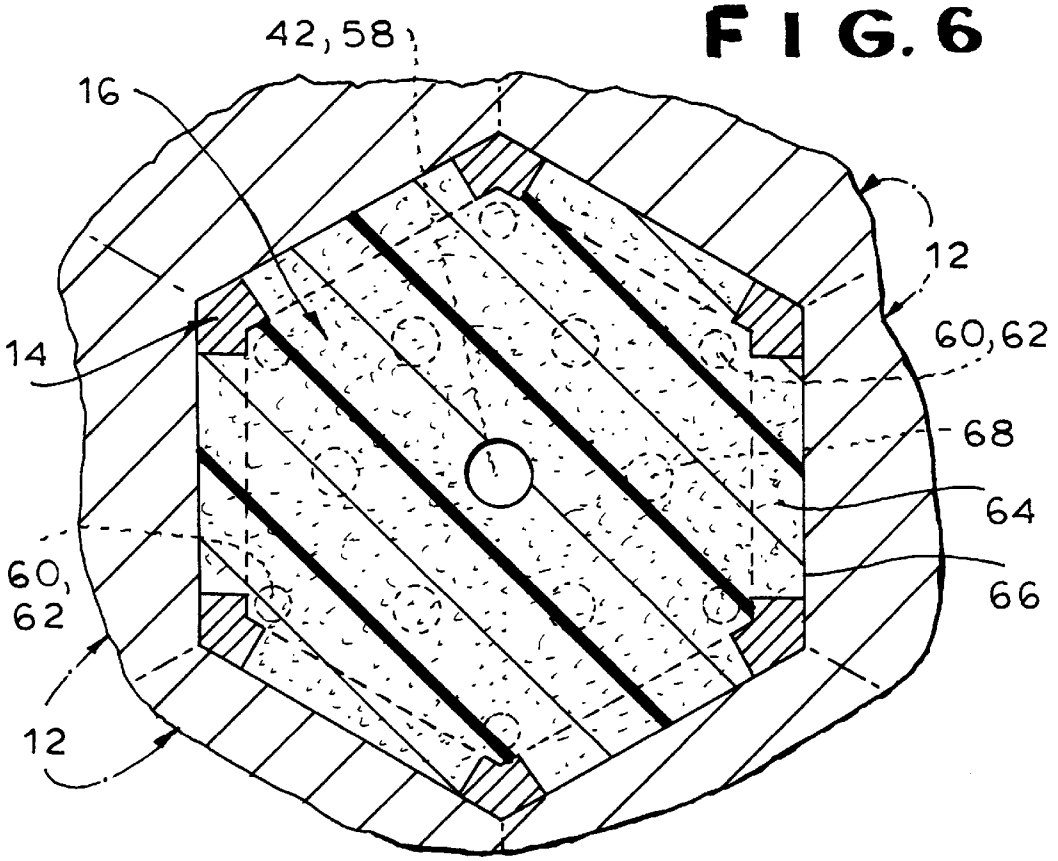
42,58
16
12
14
60,62
68
64
60,
62
66
12

CARTILAGE REPAIR UNIT

This is a continuation of application Ser. No. 08/289,387 filed on Aug. 12, 1994, now abandoned.

BACKGROUND OF THE INVENTION

This invention relates to a bio-absorbable cartilage repair system for regenerating articular cartilage and, more particularly, a system which allows for vascular invasion and cellular migration between the system and the adjacent healthy area of articular cartilage and cancellous bone, thereby resulting in regeneration of the damaged articular cartilage.

Articular cartilage on the surface of bones in joints, most particularly the knee and hip joints, is susceptible to deterioration caused by injury or disease. This deterioration of cartilage leads to pain and eventually loss of joint movement and severe pain. As a result, various methods have been developed to treat and repair damaged or destroyed articular cartilage.

Prosthetic devices are often used to replace damaged or destroyed articular cartilage. For example, U.S. Pat. No. 4,627,853 discloses prosthesis which are used for articular cartilage replacement. The prosthesis are prepared by demineralization of a bone segment, the demineralized bone segment serving as a replacement for articular cartilage.

U.S. Pat. No. 4,880,429 discloses a prosthetic meniscus which is implanted in the knee. The prosthetic meniscus acts as a scaffold for regrowth of native meniscal tissue, and comprises collagen fibers interspersed with glycoaminoglycan molecules.

U.S. Pat. No. 5,176,710 discloses a prosthesis for replacing bone material on the articulating surface of a joint. The prosthesis has a specific modulus of elasticity so as to confer stiffness to the prosthesis, and contains concave shapes which are suitable for biologic ingrowth.

U.S. Pat. No. 4,502,161 discloses a prosthetic meniscus which replaces the natural meniscus between the articular surfaces of the bones and the joints, and comprises an insert and extension for attachment to the bone and a reinforcing fabric or mesh embedded therein.

U.S. Pat. No. 3,745,590 discloses a prosthesis for the repair or replacement of joints, which prosthesis comprises a body portion, including a stem and ligamentous elements, and allows for tissue ingrowth.

U.S. Pat. No. 5,123,927 discloses a knee prosthesis comprising bone cement containing an antibiotic.

Although there are several prosthetic devices which can be used in the replacement of damaged or destroyed articular cartilage, prosthetic devices have several disadvantages. For example, cements which are used to attach prosthetic devices to bones may loosen and eventually fail. In addition, fragmented cement can move into the joints and associated lymph tissue and cause inflammation and further damage. Further, cements result in the formation of fibrous tissue between the bone and the prosthesis. Another major disadvantage associated with the use of prosthesis is that the prosthetic device may be larger than the damaged cartilage that needs to be replaced, thereby requiring removal of portions of healthy bone and/or cartilage in order to accommodate the prosthetic device. Hence, the need remains for a system for repairing and regenerating articular cartilage which avoids the problems associated with prosthetic devices.

Another means used to treat damaged articular cartilage is the placement of repair pieces onto the bone, which repair pieces substitute for cut-out pieces of cartilage. For example, U.S. Pat. No. 5,067,964 discloses an articular cartilage repair piece which comprises a layer of nonwoven, felted fibrous material which is limp and readily conformable to flat and curved surfaces. The articular cartilage repair piece is attached to the bone, for example, by bio-absorbable screws or pins or like temporary fixation techniques. Fibrous tissue ingrowth eventually surrounds the repair piece, thereby causing the repair piece to be permanently attached to the bone. Although U.S. Pat. No. 5,067,964 discloses an alternative method for repairing damaged articular cartilage, it does not disclose any means or method of regenerating damaged or destroyed articular cartilage. Hence, the need remains for a system for regenerating damaged or destroyed articular cartilage, wherein the regenerated articular cartilage is functionally similar to non-damaged articular cartilage.

Accordingly, an object of this invention is to provide a system for regenerating articular cartilage.

Another object is to provide a system for regenerating articular cartilage wherein the regenerated articular cartilage is functionally superior to fibrous or fibrocartilagenous repairs and is functionally similar to non-damaged articular cartilage.

A further object is to provide a cartilage repair system for use in regenerating damaged or destroyed articular cartilage.

A still further object of the present invention is to provide an embodiment of the cartilage repair system which does employ cement or non-bio-absorbable prosthetic devices.

SUMMARY OF THE INVENTION

It has now been found that the above and related objects of the present invention are obtained by a bio-absorbable cartilage repair system for regenerating damaged or destroyed articular cartilage on the surface of a bone which establishes a chondrogenic growth-supporting matrix between an area of damaged or destroyed articular cartilage that has been removed and the adjacent healthy area of articular cartilage and cancellous or trabecular bone. The system comprises an assembly of a bio-absorbable delivery unit, configured and dimensioned to be mounted in both the removed area and the adjacent healthy area of bone, and a porous bio-absorbable insert, supported by and in the delivery unit and establishing communication between the removed area and the adjacent healthy area for a chondrogenic growth-supporting matrix.

In a preferred embodiment, the insert includes a repair factor releasably disposed in the insert to assist in establishing the chondrogenic growth-supporting matrix. The repair factor may be a growth factor, preferably one selected from the group consisting of fibroblast growth factor, transforming growth factor beta, insulin, insulin-like growth factor, platelet derived growth factor and combinations thereof. Alternatively, the repair factor may be an attachment factor, preferably one selected from the group consisting of fibronectin, RGD polypeptide and combinations thereof. Indeed, the repair factor preferably includes both growth and attachment factors.

The cartilage repair system typically includes a plurality of the aforementioned assemblies, with the delivery units of the assemblies being disposed within the bone and the removed area, and the inserts of the assemblies establishing the chondrogenic growth-supporting matrix over a substantial portion of the removed area. Preferably the delivery units of the assemblies are polygonal in configuration and interfitting.

In another preferred embodiment, the insert consists substantially of a bio-absorbable material selected from the group consisting of hyaluronic acid, polyglycolic acid, collagen, polylactic acid, fibrin clot, periosteal cells, polydioxane, polyester, alginate and combinations thereof, while the delivery unit comprises a bio-absorbable material selected from the group consisting of hyaluronic acid polyglycolic acid, polylactic acid, alginate and combinations thereof. Preferably the delivery unit is integrally molded and defines channels therethrough to allow vascular invasion and cellular migration to an adjacent surface of the insert.

The cartilage repair system preferably includes means precluding relative rotation of the delivery unit and the insert in the delivery unit.

The present invention further encompasses a cartilage repair system adapted to be mounted on the surface of a bone to establish a chondrogenic growth-supporting matrix, wherein the system comprises a bio-absorbable delivery unit configured and dimensioned to be mounted on the bone, the unit including a support frame and means for mounting the unit in the bone, and a porous bio-absorbable insert supported by the support frame to provide a chondrogenic growth-supporting matrix.

In a preferred embodiment, the insert includes a repair factor releasably disposed in the insert to enhance the chondrogenic growth-supporting matrix. Further, the support frame is constructed to allow vascular invasion and cellular migration to the insert. Thus, the support frame preferably has an open top, a bottom defining a plurality of channels therethrough to allow vascular invasion and cellular migration to the bottom of the insert and optionally side walls defining windows through which the insert extends to allow cellular migration to the sides of the insert by an adjacent healthy area of articular cartilage. The unit and the insert define an assembly, and the system preferably consists of a plurality of the assemblies in contiguous and abutting relationship. The unit is preferably more rigid than the insert.

BRIEF DESCRIPTION OF THE DRAWING

The above brief description, as well as further objects, features and advantages of the present invention, will be more fully understood by reference to the following detailed description of the presently preferred, albeit illustrative, embodiments of the present invention when taken in conjunction with the accompanying drawings wherein:

FIG. **1** is a fragmentary schematic view of a knee having therein a pair of assemblies of the cartilage repair system according to the present invention;

FIG. **2** is an exploded isometric view of one assembly of the cartilage repair system;

FIG. **3** is a top plan view thereof

FIG. **4** is a side elevational view thereof;

FIG. **5** is a sectional view thereof taken along line **5—5** of FIG. **3** and fragmentarily shows the cartilage repair system inserted into a bone; and

FIG. **6** is a sectional view thereof taken along line **6—6** of FIG. **5**, with potential adjacent assemblies being fragmentarily illustrated in phantom line.

DETAILED DESCRIPTION OF THE PREFERRED EMBODIMENTS

Referring now to the drawing, and in particular to FIG. **1** thereof, therein illustrated is a cartilage repair system according to the present invention, generally designated by the reference numeral **10**. More particularly, the cartilage repair system **10** illustrated in FIG. **1** is comprised of a plurality of assemblies generally designated **12** (two being illustrated, but it being understood that the requisite number is determined by the extent of the damaged area). Each assembly **12** is in turn comprised of a bio-absorbable delivery unit **14** and a porous bio-absorbable insert **16**. The delivery unit **14** is configured and dimensioned to be mounted in both the area from which damaged or destroyed articular cartilage has been removed and the adjacent healthy cancellous bone area of the bone. The porous insert **16** is supported by and in the delivery unit **14** and establishes communication between the removed area (that is, the area from which the damaged or destroyed articular cartilage has been removed) and the adjacent healthy area for a chondrogenic growth-supporting matrix, thereby promoting vascular invasion and cellular migration to achieve articular cartilage regeneration.

While the system **10** is illustrated in FIG. **1** as being used to regenerate damaged or destroyed articular cartilage on the femoral knee joint surface K, those skilled in the medical arts will readily appreciate that the system **10** is equally useful in other articular joints such as the shoulder, hip, and the like. The extent of the damaged or destroyed articular cartilage on the surface of the bone will determine whether the system **10** employs a single assembly **12** or a plurality of assemblies **12**. The illustrated assemblies **12** (and in particular the delivery units **14** thereof) are polygonal in plan and interfitting—that is, disposed such that they preferably can be mounted in contiguous abutting contact in a side-to-side relationship. The polygonal nature of the periphery of the assemblies permits interfitting of the assemblies **12** (as generally illustrated in FIG. **6**) and is thus preferred where a plurality of the assemblies **12** are to be used to completely cover a designated area of the bone. However, where only a single assembly **12** will be used, other configurations, such as a circular configuration, may be preferred.

While theoretically it might be possible to create in a single manufacturing operation a unitary, one-piece, integral assembly **12** which performs the functions of both the delivery unit **14** and the insert **16**, the present invention preferably utilizes two separate and independently formed components—namely, the delivery unit **14** and the insert **16**. As will be discussed below in detail, the inserts **16** can be made of a relatively wide variety of different materials and may even include a repair factor (such as a growth factor or an attachment factor) releasably disposed therein to assist in establishing the chondrogenic growth-supporting matrix. Accordingly, the two-component nature of the assembly **12** of the present invention enables the insert **16** to be selected from a supply of different inserts **16** at the time of surgery so as to meet the particular needs of the patient at the time with regard to both the basic composition of the insert **16** and any repair factor composition therein. Again, because of the differing natures of the insert **16** (and any repair factors therein) and its delivery unit **14**, it may be necessary for particular types of inserts **16** to be stored before use in different environments from the delivery units **14**—for example, in order to provide appropriate preservation of the repair factor. Finally, the delivery unit **14** and insert **16** of an assembly **12** must have different functional characteristics which would be difficult to achieve through known manufacturing techniques in an integral, one-piece, unitary element. Thus, as will be discussed below, the delivery unit **14** must have sufficient strength and integrity to enable it to be tamped into the bone without significant bending or deforming, while the insert **16** is preferably a flexible and resilient porous material in the form of a matrix to enable it

to be snapped into the delivery unit **14** and thereby provide a chondrogenic growth-supporting matrix positioned by the delivery unit **14**.

Referring specifically to FIGS. **2** and **5**, delivery unit **14** is comprised of an upper cup-like support frame **22** and a lower T-like elongate member **23**. The support frame **22** has an upper rim **24** defining an open top, side walls **26** and a bottom portion **30**. The elongate member **23** (which is preferably cylindrical) extends downwardly from the bottom portion **30** (which is preferably concave) and has radially extending ribs **38**, a blunt bevelled bottom **40** and a bore **42** (preferably about 1.5 mm in diameter) extending axially therethrough. The disc- or wafer-like insert **16** has a top surface **52**, side walls **54**, a bottom surface **56** and a bore **58** (preferably about 1.5 mm in diameter) extending axially therethrough and after insertion into delivery unit **14** coaxial with bore **42** thereof.

The support frame **22** of the delivery unit **14** receives the insert **16** therein, with the side walls **26** of the support frame **22** receiving therewithin the side walls **54** of the insert **50**. The bottom surface **56** of the insert **16** and the bottom portion **30** of the support frame **22** are correspondingly shaped, preferably with the bottom surface of the insert **16** defining a protrusion and the upper surface of the bottom portion **30** defining a protrusion-receiving cavity, so that the two bores **42**, **58** are automatically and accurately coaxially disposed after the insertion process. In other words, when the insert **16** is secured in the supporting frame **22**, the bore **42** through the elongate member **23** and the bore **58** through the insert **16** are in vertically aligned contiguous relationship.

As will readily be appreciated by those skilled in the implant arts, if vascular invasion and cellular migration is to be effected between the healthy cancellous bone area and the area of removed damaged cartilage via the insert **16**, means must be provided to preclude relative rotation of the delivery unit **14** and the insert **16**. This may be accomplished in a number of different ways.

First, as best seen in FIGS. **2–3** and **6**, the external periphery of the insert **16** and the internal periphery of the support frame **22** may be polygonal or irregular (that is, non-circular) and sized to abut one another so that they are locked together for rotation only as a unit. For example, as illustrated, the hexagonal outer periphery of insert **16** snugly fits within hexagonal inner periphery of support frame **22** to preclude relative rotation.

Second, the upper surface of the concave bottom portion **30** of the support frame **22** may define upwardly extending bosses **60** adjacent the side walls **26**, while the lower surface of the insert **16** may define upwardly extending recesses **62** configured and dimensioned to receive the bosses **60**, as best seen in FIGS. **3** and **6**. The number of bosses **60** and recesses **62** as well as the shape, size and placement thereof, are selected so that, when the insert **16** is within the delivery unit **14**, the bosses **60** are snugly received in the recesses **62**, such that the insert **16** and delivery unit **14** are precluded from relative rotation as long as the insert **16** is within the support frame **22**.

Third, the side walls **54** of the insert **16** may define radially outwardly extending flanges **64** therein or therethrough, and the side walls **26** of the support frame **22** may define windows **66** therethrough configured and dimensioned to snugly receive the flanges **64** therein or therethrough. The number of flanges **64** and windows **66**, as well as the size, shape and spacing thereof, are selected so that, when the insert **16** is within the support frame **22**, relative rotation of the insert **16** and the delivery unit **14** is precluded as long as the flanges **64** snugly extend into (and possibly through) the windows **66**. In order to enable the insert **16** with its flanges **64** to be easily inserted into the supporting frame **22** with its windows **66**, the insert **16**, or at least the flanges **64** thereof, are preferably resiliently flexible. The flanges **64** or windows **66** may also have bevelled edges to facilitate snapping the flanges **64** into the windows **66** during the insertion process.

In the last two alternatives, the height of the bosses **60** and the depth of the recesses **62** or the relative heights of the flanges **64** and windows **66** are selected so that the bottom surface **56** of the insert **16** will rest on the upper surface of the bottom portion **30** of the delivery unit **14**. It will be appreciated by those skilled in the mechanical arts that a wide variety of different keying mechanisms well known in the mechanical arts may be used in order to preclude relative rotation of the insert **16** and the delivery unit **14**. However, it must be kept in mind that in the present invention, over time, the bio-absorbable elements—that is, the delivery unit **14** and the insert **16**—will be disappearing as the human body hydrolyzes the material from which they are made. Accordingly, the selection of an appropriate keying mechanism to preclude relative rotation of the insert **16** and the delivery unit **14** must be made with this consideration in mind. It will be appreciated that while, for the purposes of exposition, a variety of different keying mechanisms have been illustrated in a single embodiment, in fact a single keying mechanism may suffice for a particular embodiment, although a plurality of such mechanisms may also be used.

In order to enable the insert **16** to function as a chondrogenic growth-supporting matrix, it must have access to vascular invasion and cellular migration to regenerate the articular cartilage defect. Such access is provided on the internal periphery of the insert **16** by the bore **58**. On the external periphery of the insert **16**, the windows **66** on the supporting frame **22** provide direct contact to the adjacent healthy articular cartilage or to the adjacent repair assemblies. These windows **66** allow cellular migration to occur to the insert. The entire top surface **52** of the insert **16** is exposed to the articular environment of the affected joint, and a substantial portion of the bottom surface **56** of the insert **16** is exposed to the cancellous bone through channels **68**, which extend axially through the bottom **30** of support frame **22**. Providing communication between the area of removed damaged articular cartilage and the healthy cancellous or trabecular bone, the number of the channels **68**, as well as the size, shape and placement thereof, is selected to provide a desirable level of communication without unduly deleteriously affecting the strength of the delivery unit **14**. The axially disposed channels **68** are, of course, disposed radially outwardly of the elongate member **23** so that the channels **68** do not have to extend axially therethrough.

The delivery unit **14** is hard and preferably does not bend or deform under expected pressures. It is preferably integrally molded. It is critical that the delivery unit **14** be made of a bio-absorbable material such as those well known in the implant art. For example, it is preferably made of polyglycolic acid, polylactic acid or combinations thereof (e.g., copolymers and mixtures thereof) each of the foregoing materials inherently being dimensionally stable against substantial expansion by absorption of synovial joint fluid.

Several delivery units **14** can be placed contiguously in an area of removed damaged articular cartilage such that a large portion of the removed area will be filled with the assemblies **12**. In this case, the delivery units **14** are preferably regular polygons and interfitting in an abutting and contiguous

relation. A circular delivery unit may be used where only one delivery unit is employed or where only partial coverage of the removed area is desired.

The insert **16** is made substantially of porous material in the form of a matrix or sponge, preferably defining at least 95% voids by volume, so that it can serve as a biological scaffold for an invasion of cells to regenerate the articular cartilage. It typically has the felt-like feel of a non-woven fabric. The insert **16** may be manually bendable or flexible when it is necessary to push, press or snap the same into the delivery unit **14**. It is critical that the insert **16** consists substantially (typically at least 99% by weight) of a bio-absorbable material selected from the group consisting of hyaluronic acid (e.g. as a fiber matrix), polyglycolic acid (e.g., as fiber matrix), collagen, including type I collagen (e.g., as a sponge matrix), polylactic acid (e.g. as a fiber matrix), fibrin clot (which can be filled and molded into the delivery unit), collagen gel (which can be overlayed into a polyglycolic acid matrix), isolated periosteal cells, polydioxane, polyester, alginate or combinations thereof. The polylactic acid, and to a lesser degree the hyaluronic acid, polyglycolic acid, and alginate, contribute to the hardness and longevity (i.e., life in situ after implantation) of the insert **16**. The insert may be annealed (i.e., heat-treated or cooked) to modify its crystallinity and thus its hardness and longevity. The isolated periosteal cells may be cultured in the insert material or overlaid at the time of surgery into the insert material. Other cell types, such as mesenchymal stem cells or chondrocytes, may also be added to the insert material.

In addition, in a preferred embodiment of the invention, the insert **16** can contain within the matrix "repair factors" such as growth factors and/or attachment factors well known in the medical arts. For example, the insert **16** can contain, as growth factors, fibroblast growth factor (acidic or basic), transforming growth factor-beta (1, 2, 3 or one of the members of the supergene family of TGF-beta, such as bone morphogenic protein; BMP), insulin, insulin-like growth factor 1 & 2, platelet-derived growth factor or combinations thereof. The attachment factors which can be used in the insert include fibronectin, RGD polypeptide and combinations thereof. Typically, the repair factors total less than 1% by weight of the insert, but can range up to 10% depending on the factors' specific activities and release kinetics. The repair factors may be chemically combined with the basic implant composition (e.g., during polymerization thereof) or may be added to an already formed basic implant composition. In the former case, additional repair factor will typically become available as the basic implant composition biodegrades.

Referring now to FIG. **5**, after surgical removal of the damaged or destroyed articular cartilage, the elongate member **23** (extending downwardly from the concave bottom portion **30** of the support frame **22**) is placed into the cancellous bone **74** through the sub-chondral bone plate **72** which is below of the damaged articular cartilage area. The support frame **22** is supported by the sub-chondral bone plate **72**. The elongate member **23** has a blunt bevelled bottom **40** so that the elongate member **23** can be placed easily into the cancellous bone **74**, which is a soft region of the bone. The bottom **40** of the elongate cylindrical member **23** is blunt so that the bottom **40** does not break when the elongate cylindrical member **23** is placed inside the cancellous bone **74**. When the elongate member **23** is placed into the soft cancellous bone **74**, the cancellous bone **74** is displaced by, and reforms around, the radially extending ribs **38** of the elongate member **23**. In this manner, the elongate member **23**, and thereby the entire cartilage repair system **10**, is held in place.

When the delivery unit **20** is placed in the bone, the upper rim **24** of the support frame **22** is planar with undamaged articular cartilage **76**. The windows **66** and the upper rim **24** of the support frame **22** are not placed inside the bone, but rather remain exposed to the surrounding articular cartilage. The top surface **52** of the polymer insert **50** is exposed to the joint space environment. The top portion of the exterior surface of the side walls **26** of the support frame **22** laterally abuts either the top portion of the exterior surface of the side walls **26** of adjacent support frames **22** (see FIG. **6**), or undamaged articular cartilage **76** when placed adjacent a peripheral portion of an area of removed cartilage. The bottom portion of the exterior surface of the side walls **26** of the support frame **22** (i.e., the portions below windows **66**) rests on and laterally abuts the sub-chondral bone plate **72**.

When the cartilage repair system of the invention is placed in an area of removed damaged articular cartilage, through the sub-chondral bone plate **72** into the cancellous bone **74**, the channels **68** in the bottom portion **30** of the support frame **22** allow for communication between the healthy cancellous bone **74** and the damaged articular cartilage area via a chondrogenic growth-supporting matrix. This permits vascular invasion and cellular migration, which results in regeneration of the articular cartilage. The regenerated articular cartilage is functionally similar to undamaged articular cartilage. The cartilage repair system of the invention is bio-absorbed over time and therefore need not be surgically removed during or after cartilage regeneration. The absorption rate is formula controlled and can range from 6–12 weeks to one year depending on its site-specific application.

As the basic bio-absorbable composition of the insert **16** degrades or hydrolyzes over time, any repair factors contained therein are progressively released into the site, thus further promoting cellular regeneration. Cellular regeneration occurs throughout the insert.

The term "bio-absorbable" is used in the specification and claims hereof to indicate a material which will be degraded or absorbed by the body such that regenerated articular cartilage thereabout is functionally similar to non-damaged articular cartilage.

To summarize, the present invention provides a system for regenerating articular cartilage wherein the regenerated articular cartilage is functionally similar to non-damaged articular cartilage and therefore replaces damaged or destroyed articular cartilage without employing cement or a non-bio-absorbable prosthetic device.

Now that the preferred embodiments of the present invention have been shown and described in detail, various modifications and improvements thereon will become readily apparent to those skilled in the art. Accordingly, the spirit and scope of the present invention is to be construed broadly and limited only by the appended claims, and not by the foregoing specification.

We claim:

1. A bio-absorbable cartilage repair system for regenerating damaged or destroyed articular cartilage on a joint surface of a bone by establishing a chondrogenic growth-supporting matrix between an area of damaged or destroyed articular cartilage that has been removed and an adjacent healthy area of articular cartilage and subchondral cancellous bone, said system comprising an assembly of:

(A) a delivery unit consisting substantially of completely bio-absorbable material which is dimensionally stable

against substantial expansion by absorption of synovial joint fluid and configured and dimensioned to be mounted in both an area of damaged or destroyed articular cartilage that has been removed and an adjacent healthy area of articular cartilage and subchondral cancellous bone; and

(B) a porous insert supported by said delivery unit, consisting substantially of completely bio-absorbable material, and defining at least 95% voids by volume for establishing communication between the removed area and the adjacent healthy area for a chondrogenic growth-supporting matrix.

2. The cartilage repair system of claim **1** wherein said insert includes a repair factor releasably disposed in said insert to assist in establishing said chondrogenic growth-supporting matrix.

3. The cartilage repair system of claim **2** wherein said repair factor is a growth factor.

4. The cartilage repair system of claim **3** wherein said growth factor is selected from the group consisting of fibroblast growth factor, transforming growth factor beta, insulin, insulin-like growth factor, platelet-derived growth factor and combinations thereof.

5. The cartilage repair system of claim **2** wherein said repair factor is an attachment factor.

6. The cartilage repair system of claim **5** wherein said attachment factor is selected from the group consisting of fibronectin, RGD polypeptide and combinations thereof. selected from the group consisting of hyaluronic acid, polyglycolic acid, collagen, polylactic acid, fibrin clot, periosteal cells, polydioxane, polyester, alginate and combinations thereof.

7. The cartilage repair system of claim **1** wherein said insert consists substantially of a bio-absorbable material.

8. The cartilage repair system of claim **1** wherein said delivery unit comprises a bio-absorbable material selected from the group consisting of hyaluronic acid, polyglycolic acid, polylactic acid, alginate and combinations thereof.

9. The cartilage repair system of claim **1** wherein said delivery unit defines channels therethrough to allow vascular invasion and cellular migration to an adjacent surface of said insert.

10. The cartilage repair system of claim **1** wherein said delivery unit is integrally molded.

11. The cartilage repair system of claim **1** including means precluding relative rotation of said delivery unit and said insert in said delivery unit.

12. The cartilage repair system of claim **1** wherein

said delivery unit defines channels therethrough to allow vascular invasion and cellular migration to an adjacent surface of said insert; and

said assembly includes means precluding relative rotation of said delivery unit and said insert in said delivery unit.

13. The cartilage repair system of claim **12** including a plurality of assemblies, said delivery units of said assemblies being disposed within said healthy area of bone and said removed area, and said inserts of said assemblies establishing said chondrogenic growth-supporting matrix over a substantial portion of said removed area, said delivery units of said assemblies being polygonal in configuration and interfitting.

14. The cartilage repair system of claim **12** wherein said insert consists substantially of a bio-absorbable material selected from the group consisting of hyaluronic acid, polyglycolic acid, collagen, polylactic acid, fibrin clot, periosteal cells, polydioxane, polyester, alginate and combinations thereof; and said delivery unit comprises a bio-absorbable material selected from the group consisting of hyaluronic acid, polyglycolic acid, polylactic acid, alginate and combinations thereof.

15. The cartilage repair system of claim **1** wherein said delivery unit is configured as a polygon and dimensioned to be mounted in an area of damaged or destroyed articular cartilage that has been removed and an adjacent healthy area of articular cartilage and cancellous bone.

16. The cartilage repair system of claim **12** wherein said insert includes a repair factor releasably disposed in said insert to assist in establishing said chondrogenic growth-supporting matrix, said repair factor being selected from the group consisting of a growth factor, an attachment factor and combinations thereof.

17. The cartilage repair system of claim **1** wherein said insert includes cells selected from the group consisting of isolated periosteal cells, mesenchymal stem cells, chondrocytes and combinations thereof.

18. A bio-absorbable cartilage repair system for regenerating damaged or destroyed articular cartilage on a joint surface of a bone by establishing a chondrogenic growth-supporting matrix between an area of damaged or destroyed articular cartilage that has been removed and an adjacent healthy area of articular cartilage and subchondral cancellous bone, said system comprising an assembly of:

(A) a delivery unit consisting substantially of completely bio-absorbable material which is dimensionally stable against substantial expansion by absorption of synovial joint fluid and configured and dimensioned to be mounted in both an area of damaged or destroyed articular cartilage that has been removed and an adjacent healthy area of articular cartilage and subchondral cancellous bone; and

(B) a porous insert supported by said delivery unit, consisting substantially of completely bio-absorbable material, and defining at least 95% voids by volume for establishing communication between the removed area and the adjacent healthy area for a chondrogenic growth-supporting matrix;

said system including a plurality of assemblies, said delivery units of said assemblies being disposed within said bone and said removed area, and said inserts of said assemblies establishing said chondrogenic growth-supporting matrix over a substantial portion of said removed area.

19. The cartilage repair system of claim **18** wherein said delivery units of said assemblies are polygonal in configuration and interfitting.

20. The cartilage repair system of claim **18** wherein said insert includes cells selected from the group consisting of isolated periosteal cells, mesenchymal stem cells, chondrocytes and combinations thereof.

21. A cartilage repair system adapted to be mounted on a joint surface of a bone to establish a chondrogenic growth-supporting matrix, comprising a delivery unit consisting substantially of completely bio-absorbable material which is dimensionally stable against substantial expansion by absorption of synovial joint fluid and configured and dimensioned to be mounted on and within the bone, said unit including a support frame and means for mounting said unit on and within the bone, and a porous insert consisting substantially of completely bio-absorbable material, defining at least 95% voids by volume, and supported by said support frame to provide a chondrogenic growth-supporting matrix.

22. The cartilage repair system of claim **21** wherein said insert includes a repair factor releasably disposed in said

insert to assist in providing said chondrogenic growth-supporting matrix.

23. The cartilage repair system of claim **21** wherein said support frame is constructed to allow vascular invasion and cellular migration to said insert.

24. The cartilage repair system of claim **23** wherein said support frame has an open top and a bottom defining a plurality of channels therethrough to allow vascular invasion and cellular migration to the bottom of said insert.

25. The cartilage repair system of claim **24** wherein said insert has sides, and said support frame has side walls defining windows through which said insert extends to allow cellular migration to the sides of said insert by an adjacent healthy area of articular cartilage.

26. The cartilage repair system of claim **21** wherein said unit and said insert define an assembly, and said system consists of a plurality of said assemblies in contiguous and abutting relationship.

27. The cartilage repair system of claim **21** wherein said unit is more rigid than said insert.

28. The cartilage repair system of claim **21** additionally including means precluding relative rotation of said unit and said insert.

29. The cartilage repair system of claim **21** wherein said insert includes cells selected from the group consisting of isolated periosteal cells, mesenchymal stem cells, chondrocytes and combinations thereof.

30. A bio-absorbable cartilage repair system for regenerating damaged or destroyed articular cartilage on a surface of a bone by establishing a chondrogenic growth-supporting matrix between an area of damaged or destroyed articular cartilage that has been removed and an adjacent healthy area of articular cartilage and cancellous bone, said system comprising an assembly of:

(A) a bio-absorbable delivery unit configured and dimensioned to be mounted in both an area of damaged or destroyed articular cartilage that has been removed and an adjacent healthy area of articular cartilage and cancellous bone; and

(B) a porous, bio-absorbable insert supported by said delivery unit and establishing communication between the removed area and the adjacent healthy area for a chondrogenic growth-supporting matrix;

said delivery unit having an open top, a bottom and a sidewall connecting said top and bottom, said bottom defining a plurality of channels therethrough to allow vascular invasion and cellular migration through the bottom of said insert, and said sidewall defining windows to which said insert extends to allow cellular migration to the sides of said insert by an adjacent healthy area of articular cartilage.

31. A bio-absorbable cartilage repair system for regenerating damaged or destroyed articular cartilage on a joint surface of a bone by establishing a chondrogenic growth-supporting matrix between an area of damaged or destroyed articular cartilage that has been removed and an adjacent healthy area of articular cartilage and subchondral cancellous bone, said system comprising an assembly of:

(A) a delivery unit consisting substantially of completely bio-absorbable material to be mounted in both an area of damaged or destroyed articular cartilage that has been removed and an adjacent healthy area of articular cartilage and subchondral cancellous bone, said delivery unit including means for retaining itself in the adjacent healthy area without either an expansion of the dimensions thereof or a relative rotation thereof; and

(B) a porous insert supported by said delivery unit, consisting substantially of completely bio-absorbable material, and establishing communication between the removed area and the adjacent healthy area for a chondrogenic growth-supporting matrix.

32. The cartilage repair system of claim **31** wherein said delivery unit defines channels therethrough to allow vascular invasion and cellular migration to an adjacent surface of said insert; and

said assembly includes means precluding relative rotation of said delivery unit and said insert in said delivery unit.

33. The cartilage repair system of claim **31** wherein said delivery unit comprises a platform to receive and support said insert and a plug to mount said platform relative to the adjacent healthy area, said plug including said retaining means.

34. The cartilage repair system of claim **32** wherein said insert includes a repair factor releasably disposed in said insert to assist in establishing said chondrogenic growth-supporting matrix, said repair factor being selected from the group consisting of a growth factor, an attachment factor and combinations thereof.

35. The cartilage repair system of claim **31** wherein said insert includes cells selected from the group consisting of isolated periosteal cells, mesenchymal stem cells, chondrocytes and combinations thereof.

36. A cartilage repair system adapted to be mounted on a joint surface of a bone to establish a chondrogenic growth-supporting matrix, comprising a delivery unit consisting substantially of completely bio-absorbable material and configured and dimensioned to be mounted on and within the bone, said delivery unit including a support frame and means for mounting said delivery unit on and within the bone, said delivery unit including means for retaining itself in the bone without either an expansion of the dimensions thereof or a relative rotation thereof, and a porous insert consisting substantially of completely bio-absorbable material and supported by said support frame to provide a chondrogenic growth-supporting matrix.

37. The cartilage repair system of claim **36** wherein said insert includes cells selected from the group consisting of isolated periosteal cells, mesenchymal stem cells, chondrocytes and combinations thereof.

38. A bio-absorbable cartilage repair system for regenerating damaged or destroyed articular cartilage on a joint surface of a bone by establishing a chondrogenic growth-supporting matrix between an area of damaged or destroyed articular cartilage that has been removed and an adjacent healthy area of articular cartilage and subchondral cancellous bone, said system comprising an assembly of:

(A) a bio-absorbable delivery unit configured, as a polygon and dimensioned to be mounted in an area, of damaged or destroyed articular cartilage that has been removed and an adjacent healthy area of articular cartilage and subchondral cancellous bone, said delivery unit including means for retaining itself in the adjacent healthy area without either an expansion of the dimensions thereof or a relative rotation thereof; and

(B) a porous, bio-absorbable insert supported by said delivery unit and establishing communication between the removed area and the adjacent healthy area for a chondrogenic growth-supporting matrix.

39. The cartilage repair system of claim **38** wherein said delivery unit comprises a platform to receive and support said insert and a plug to mount said platform relative to the adjacent healthy area, said plug including said retaining means.

40. The cartilage repair system of claim **38** wherein said insert includes cells selected from the group consisting of

isolated periosteal cells, mesenchymal stem cells, chondrocytes and combinations thereof.

41. A bio-absorbable cartilage repair system for regenerating damaged or destroyed articular cartilage on a joint surface of a bone by establishing a chondrogenic growth-supporting matrix between an area of damaged or destroyed articular cartilage that has been removed and an adjacent healthy area of articular cartilage and subchondral cancellous bone, said system comprising an assembly of:

(A) a porous, bio-absorbable insert defining at least 95% voids by volume for establishing communication between a removed area and an adjacent healthy area for a chondrogenic growth-supporting matrix; and

(B) a bio-absorbable delivery unit configured and dimensioned to be mounted in the removed area and the adjacent healthy area, said delivery unit including means for positioning said insert in the removed area and surrounded by the adjacent healthy area.

42. The cartilage repair system of claim **41** wherein said insert includes cells selected from the group consisting of isolated periosteal cells, mesenchymal stem cells, chondrocytes and combinations thereof.

* * * * *