IN THE UNITED STATES PATENT AND TRADEMARK OFFICE

In re Patent of:	Jian-Hong Zeng	Attorney Docket No.: 25808-0013IP2
U.S. Patent No.:	10,877,534	
Issue Date:	December 29, 2020	
Appl. Serial No.:	15/952,224	
Filing Date:	April 12, 2018	
Title:	POWER SUPPLY APPARATUS	

Mail Stop Patent Board
Patent Trial and Appeal Board
U.S. Patent and Trademark Office
P.O. Box 1450
Alexandria, VA 22313-1450

PETITION FOR *INTER PARTES* REVIEW OF UNITED STATES PATENT NO. 10,877,534 PURSUANT TO 35 U.S.C. §§ 311–319, 37 C.F.R. § 42

TABLE OF CONTENTS

I. REQUIREMENTS FOR IPR 1
- **A.** Grounds for Standing 1
- **B.** Challenge and Relief Requested 1
- **C.** Priority Dates 2
- **D.** Claim Construction 3
- **E.** Level of Ordinary Skill in the Art 3

II. THE '534 PATENT 4
- **A.** Brief Description 4
- **B.** Prosecution History 5

III. THE CHALLENGED CLAIMS ARE UNPATENTABLE 5
- **A.** GROUND 1 – Claims 13-19 are Obvious over Vinciarelli-218 in view of Zeng-014 5
  - 1. Summary of Vinciarelli-218 5
  - 2. Summary of Zeng-014 9
  - 3. Analysis 13
- **B.** GROUND 2 – Claims 13-15, 17, and 19 are Anticipated by Park 28
  - 1. Summary of Park 28
  - 2. Analysis 32
- **C.** GROUND 3 – Claims 13-15, 17, 19 are Obvious over Park Alone, and, if necessary, in Combination with Jun 42
- **D.** GROUND 4 – Claims 13-15, 17, and 19 are Obvious over Vinciarelli-218 in view of Park 44
- **E.** GROUND 5 – Claims 13-19 are Anticipated by Vinciarelli-664 52
  - 1. Summary of Vinciarelli-664 52
  - 2. Claims 13-19 are not entitled to a priority date prior to April 12, 2018 57
  - 3. Analysis 60
- **F.** GROUND 6 – Claims 13-19 are Obvious Over Vinciarelli-664 72

IV. DISCRETIONARY DENIAL IS NOT WARRANTED 75
- **A.** 35 U.S.C. §325(d) – *Advanced Bionics* 75
- **B.** 35 U.S.C. §314(a) – *Fintiv* 76

V. CONCLUSION AND FEES 77

VI. MANDATORY NOTICES UNDER 37 C.F.R § 42.8(a)(1).....77
A. Real Party-In-Interest Under 37 C.F.R. § 42.8(b)(1).....77
B. Related Matters Under 37 C.F.R. § 42.8(b)(2).....77
C. Lead And Back-Up Counsel Under 37 C.F.R. § 42.8(b)(3).....78
D. Service Information 79

EXHIBITS

VICOR-1001	U.S. Patent No. 10,877,534 to Jian-Hong Zeng ("the '534 Patent")
VICOR-1002	Excerpts from the Prosecution History of the '534 Patent ("the Prosecution History")
VICOR-1003	Declaration and Curriculum Vitae of Dr. R. Jacob Baker
VICOR-1004	Complaint, *Delta Electronics, Inc. v. Vicor Corporation* 1-23-cv-01246, D. Del., filed November 1, 2023
VICOR-1005	Amended Complaint, *Delta Electronics, Inc. v. Vicor Corporation* 1-23-cv-01246, D. Del., filed January 26, 2024, including Exhibit 4 (infringement claim chart)
VICOR-1006	United States Patent Application Publication No. 2014/0355218 to Vinciarelli et al. ("Vinciarelli-218")
VICOR-1007	United States Patent Application Publication No. 2009/0175014 to Zeng et al. ("Zeng-014")
VICOR-1008	U.S. Patent No. 10,285,270 to Joseph Fjelstad
VICOR-1009	United States Patent Application Publication No. 2015/0116891 to Park et al. ("Park")
VICOR-1010	United States Patent No. 10,264,664 to Vinciarelli et al. ("Vinciarelli-664")
VICOR-1011	Excerpts from the Prosecution History of U.S. Patent Application No. 14/840,063 ("063 Application and PH")
VICOR-1012	United States Patent Application Publication No. US2005/0098874 to Jun et al. ("Jun")
VICOR-1013	U.S. Patent No. 6,621,011 to Daidai et al. ("Daidai")
VICOR-1014	U.S. Patent. No. 7,361,844 to Vinciarelli et al. ("Vinciarelli-844")

VICOR-1015	U.S. Patent No. 6,934,166 to Vinciarelli et al. ("Vinciarelli-166")
VICOR-1016	"Design Guide & Applications Manual for VI-200 and VI-J00 Family DC-DC Converters and Configurable Power Supplies," Rev. 3.5, Vicor Corporation (2013) ("Design Guide")

Vicor Corporation ("Petitioner" or "Vicor") petitions for *Inter Partes* Review ("IPR") of claims 13-19 ("the Challenged Claims") of U.S. Patent No. 10,877,534 ("the '534 patent"). Compelling evidence presented in this Petition demonstrates at least a reasonable likelihood that Vicor will prevail with respect to at least one of the Challenged Claims.

I. REQUIREMENTS FOR IPR

A. Grounds for Standing

Petitioner certifies that the '534 patent is available for IPR. This petition is being filed within one year of service of a complaint against Vicor and Vicor is not barred or estopped from requesting review of the Challenged Claims on the below-identified grounds.

B. Challenge and Relief Requested

Vicor requests an IPR of the Challenged Claims on the grounds noted below. Dr. Baker provides supporting testimony in his Declaration. VICOR-1003.

Ground	Claim(s)	Statutory Basis
1	13-19	103: U.S. Pat. App. Pub. No. 2014/0355218 (Vinciarelli-218) in view of 2009/0175014 (Zeng-014)
2	13-15, 17, 19	102: U.S. Pat. App. Pub. No. 2015/0116891 (Park)
3	13-15, 17, 19	103: Park alone and, if necessary, in

Ground	Claim(s)	Statutory Basis
		view of U.S. Pat. App. Pub. No. 2005/0098874 (Jun)
4	13-15, 17, and 19	103: Vinciarelli-218 in view of Park
5	13-19	102: U.S. Pat. No. 10,264,664 (Vinciarelli-664)
6	13-19	103: Vinciarellli-664

The ’534 patent issued from U.S. Patent Application No. 15/952,224 (“224 Application”), which has a filing date of April 12, 2018. The ’534 patent claims priority to a foreign application (CN 2014 1 0442972, “CN 927 Application”) filed on September 2, 2014, and to a prior U.S. application (14/840,063, “063 Application”) filed on August 31, 2015. Accordingly, the patent should be reviewed pursuant to the AIA.

C. Priority Dates

Without conceding that the patent is entitled to the foreign priority date, this Petition will use September 2, 2014 as the critical date for Ground 1-4.

However, for Grounds 5-6, the Petition will use April 12, 2018 as the critical date, which is the date on which the 224 Application was filed. As explained in Section III.I.2, the prior U.S. application in the priority chain (the 063 Application) does not provide written description support under Section 112 for those claims. As shown below, each reference pre-dates the relevant priority date.

Reference	Filing Date	Publication Date	Prior Art At Least Under
Vinciarelli-218	5/11/2012	12/4/2014	102(a)(2)
Zeng-014	1/2/2009	7/9/2009	102(a)(1)
Park	4/22/2014	4/30/2015	102(a)(2)
Jun	11/8/2004	5/12/2005	102(a)(1)
Vinciarelli-664	6/4/2015	4/16/2019	102(a)(2)

D. Claim Construction

All claim terms should be construed according to the *Phillips* standard. *See* 37 C.F.R. § 42.100. The invalidity issues raised in this Petition may be resolved without any formal claim construction and without determining the precise metes and bounds of the claims.[1]

E. Level of Ordinary Skill in the Art

A person of ordinary skill in the art ("skilled artisan") relating to the subject matter of the '534 patent as of September 2, 2014 would have had (1) at least a bachelor's degree in electrical engineering or a related field, and (2) at least two

[1] Petitioner is not conceding that each claim satisfies all statutory requirements, nor waiving any arguments concerning indefiniteness or other grounds that may not be raised in an *inter partes* review proceeding.

years of industry experience in power engineering. VICOR-1003, ¶¶47-48. Additional graduate education could substitute for professional experience, and *vice versa*. *Id*.

II. THE '534 PATENT

A. Brief Description

The '534 patent is directed to "a power supply apparatus that includes a bearing plate, insulation material and a plurality of pins." VICOR-1001, Abstract; *see also id.,* Fig. 25.

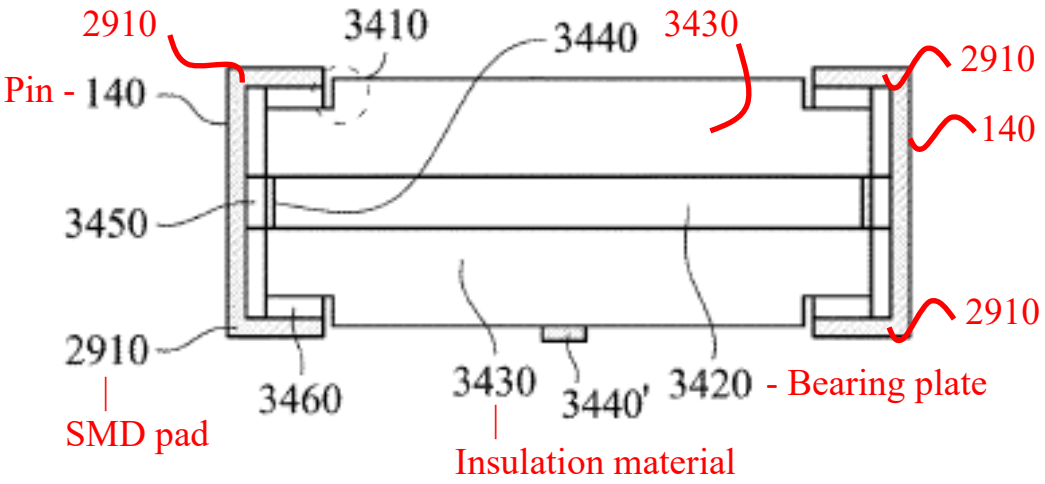

Id., Fig. 25. The bearing plate (3420 in Fig. 25 above) may be a "printed circuit board ['PCB'] or the lead frame, etc." *Id*., 15:12-14. And the insulation material (3430 in Fig. 25 above) may be formed on the top and bottom surfaces of the bearing plate. *Id*., 19:36-37, Fig. 25. "[T]he lateral side of the bearing plate 3420 is disposed with the pads 3440 [and] the soldering material 3450 on the pads 3440 is soldered to the pins 140." *Id*., 19:38-40. "At the edge of the upper and lower

surface of the insulation material 3430, there is a recess 3410; the two terminals of each pin 140 ha[ve] [an] SMD pad 2910 extending to the recess 3410 at the upper and lower surfaces, the recess[es] 3410 ha[ve] the bonding material 3460 disposed thereon for bonding with the SMD pads 2910." *Id*., 19:40-46.

B. Prosecution History

During prosecution, Patent Owner did not cite the prior art at issue here. The examiner rejected many of the original claims as obvious over U.S. Pat. App. Pub. No. 2005/0189566 (Matsumoto) in view of U.S. Pat. No. 6,496,377 (Happ), but indicated that certain dependent claims would be allowable if rewritten in independent form. VICOR-1002, 35-38. Patent Owner failed to traverse the prior art rejection and ultimately rewrote the dependent claims in independent form to obtain allowance. *Id*., 9-14, 22-23.

III. THE CHALLENGED CLAIMS ARE UNPATENTABLE

A. GROUND 1 – Claims 13-19 are Obvious over Vinciarelli-218 in view of Zeng-014

1. Summary of Vinciarelli-218

Vinciarelli-218 is entitled "Panel-Molded Electronic Assemblies" and concerns a method for making a power converter that has a printed circuit board at the center and insulation layers above and below the circuit board. Connections to the outside world are provided by "interconnection features" at the perimeter of the circuit board. Adapters with through-hole pins, surface mount pins, or other

connecters may be attached to the module and electrically connect with the interconnection features. VICOR-1006, [0111].

The method encapsulates components mounted to two sides of a printed circuit board (PCB) to form a panel of power converter modules. "Interconnection features [are] provided along [the] boundaries of [the] [PCB] … providing electrical connections to the components [on the PCB] without wasting valuable PCB surface area." VICOR-1006, Abstract. Such interconnection features may be used to form a "variety of electrical connections," such as to a motherboard. VICOR-1006, [0111].

A module with heat sinks attached is shown in FIG. 10A. The black squares 111-113 (original to the figure) are the interconnects:

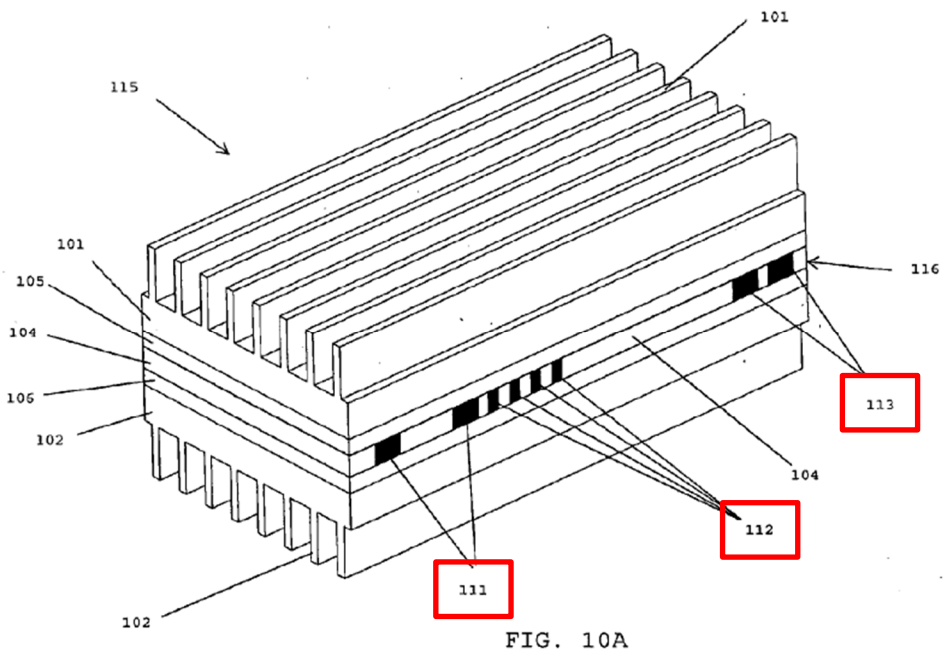

FIG. 10A

To accommodate different types of interconnects, the module may be used with

various adapters. VICOR-1006, [0026], [0028]. For example, "through-hole adapters 203A, 203B" are depicted in Figs. 15 and 16 that are "suitable for through hole mounting in a motherboard." *Id.*, [0115].

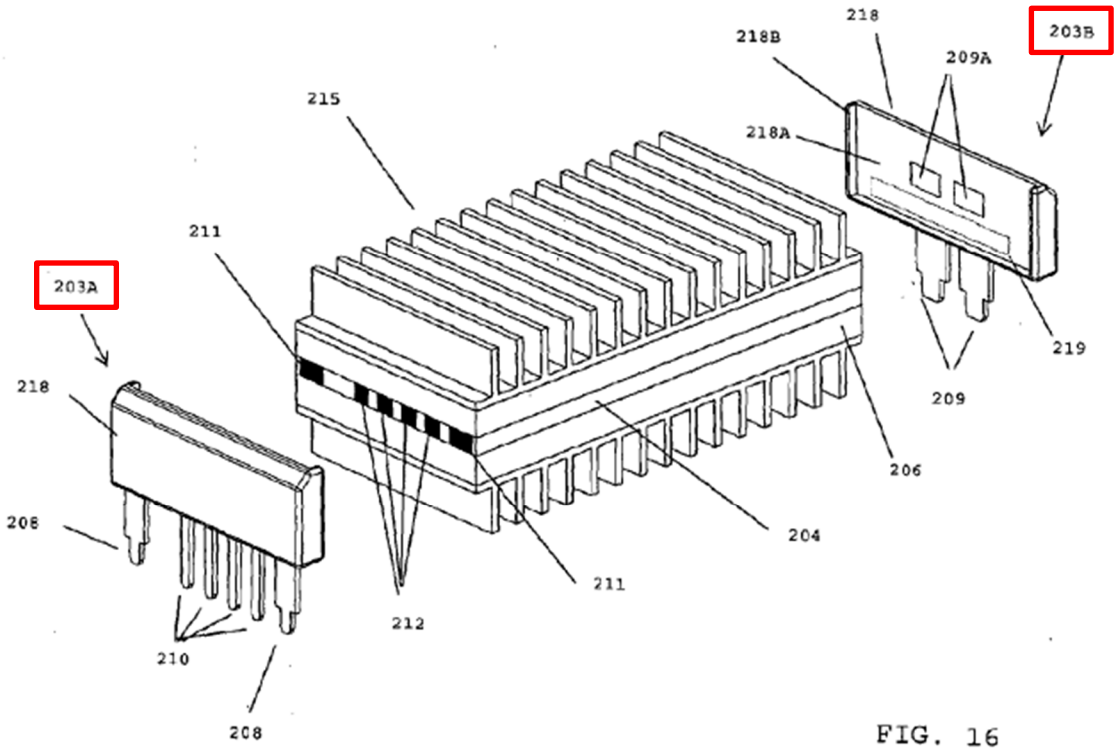

Vinciarelli-218 also discloses a surface mount adapters 303A and 303B in Figs. 17 and 18, which have "solder pads" for connection to the module and terminals that curve under the module "to produce a surface-mount pad (e.g. 308D) for attachment, e.g. by surface-mount soldering, to a customer motherboard." *Id.*, [120].

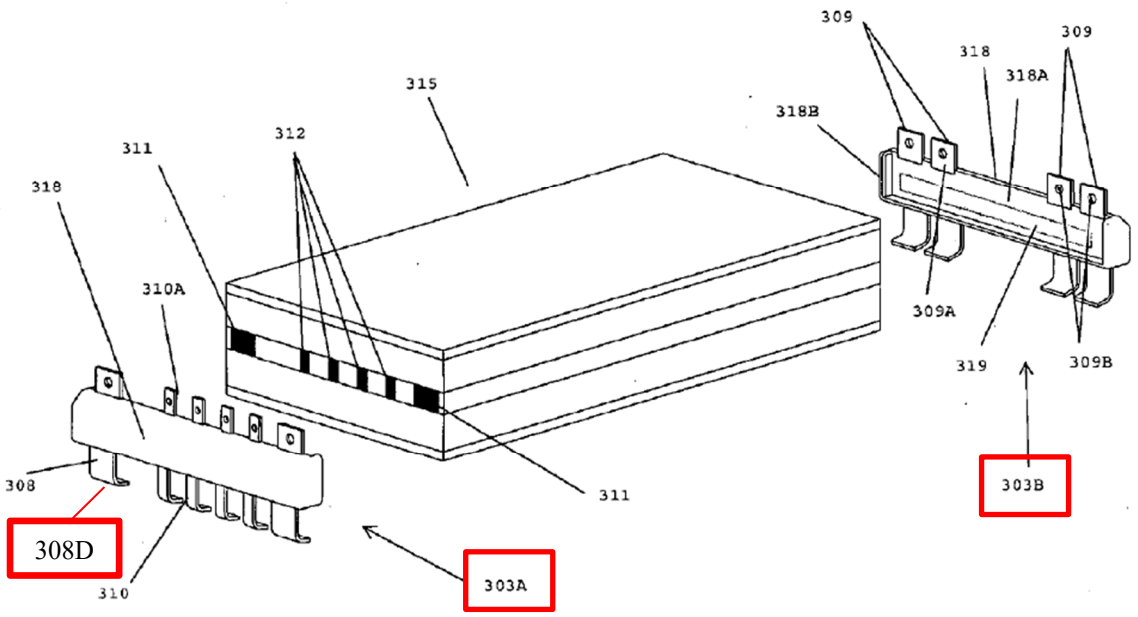

FIG. 18

Additional examples are provided. *Id*., [0127]. Notably, Vinciarelli-218 further describes a "flush-mount technique" for mounting the module directly in contact with the customer's motherboard. *Id*., [0131].

Although the modules shown above include heatsinks, Vinciarelli-218 discloses that the heatsinks can be removed such that "the top 815A and bottom 815B surfaces of the singulated module 815 are defined by the cured encapsulant 805, 806 in which the magnetic core surfaces 815C, 815D are exposed." *Id*., [0159]-[0160].

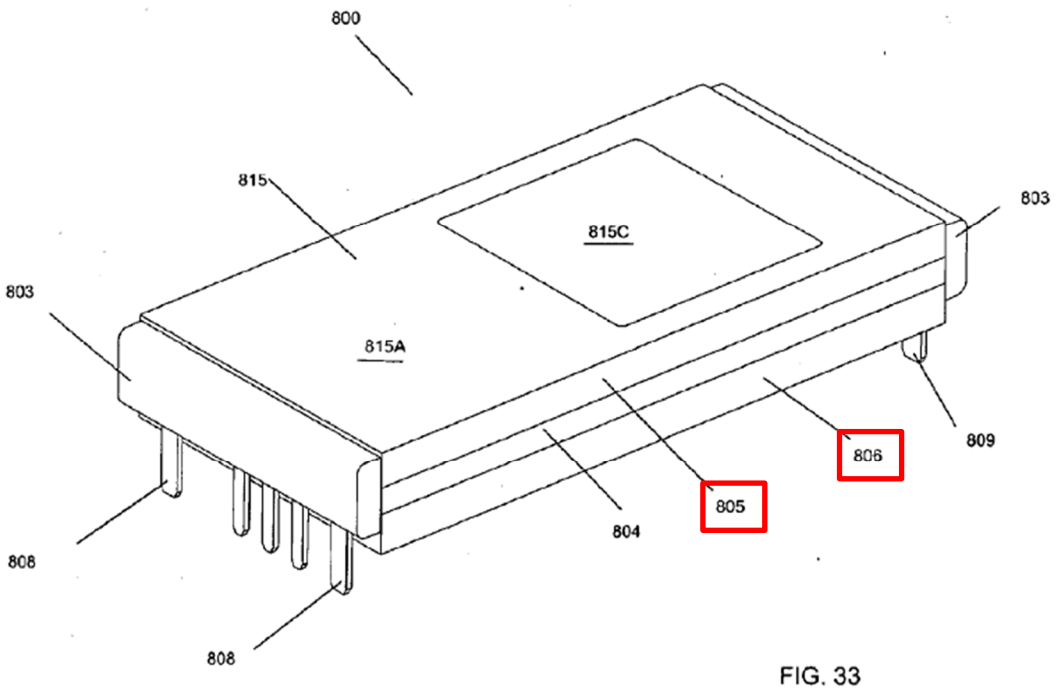

FIG. 33

2. Summary of Zeng-014

Zeng-014 discloses adding connecting and pin conductors to an electronic component such as an inductor. As explained below, Zeng-014 discloses several embodiments of its connecting and pin conductors. In Ground 1, the Petition explains how features from the first embodiment are combined with Vinciarelli-218 to render the challenged claims obvious based on the teachings of Vinciarelli-218 and Zeng-014. Certain aspects of the pin and connecting conductors of the first embodiment of Zeng-014 are understood with reference to other embodiments that, for example, provide more detail, as will be explained below. In addition, certain modifications to the pin and connecting conductors of the first embodiment of Zeng-014 are suggested by other Zeng-014 embodiments, as will be explained below.

In the first embodiment, the "connecting conductor is adapted to wrap a first surface of the inductive component." VICOR-1007, Abstract, Fig. 4A. A "first conductive layer 61 is bent in such a way that it wraps the first surface of the inductive component 62. Finally, an integrated structure 53 with a complete wrapped layer is formed." *Id*., [0062].

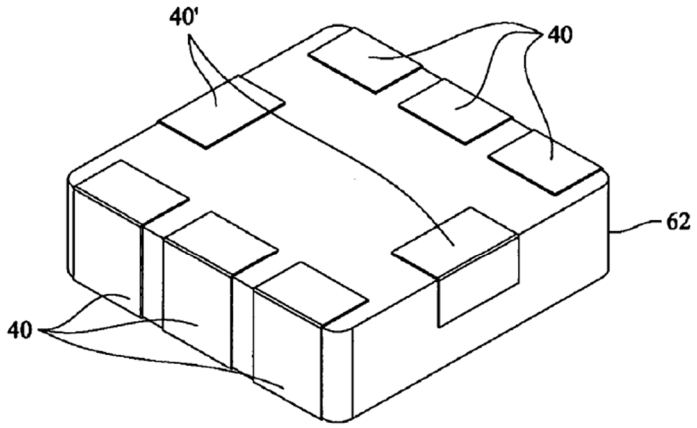

FIG. 4A

Although the illustrated component is an inductor, Zeng-014 states that the inductor is "for [the] purpose of illustration" and the disclosure "may be applied to other electronic component[s]." *Id*., [0057]. The specific configuration is exemplary only, and the connecting and pin conductors may be adjusted as desired. *Id.*, [0058]-[0059]. In the Figure 4 and 5 examples, the inductor has pin conductors before the wrapping process is started.

The process is depicted in Figs. 5A-5E:

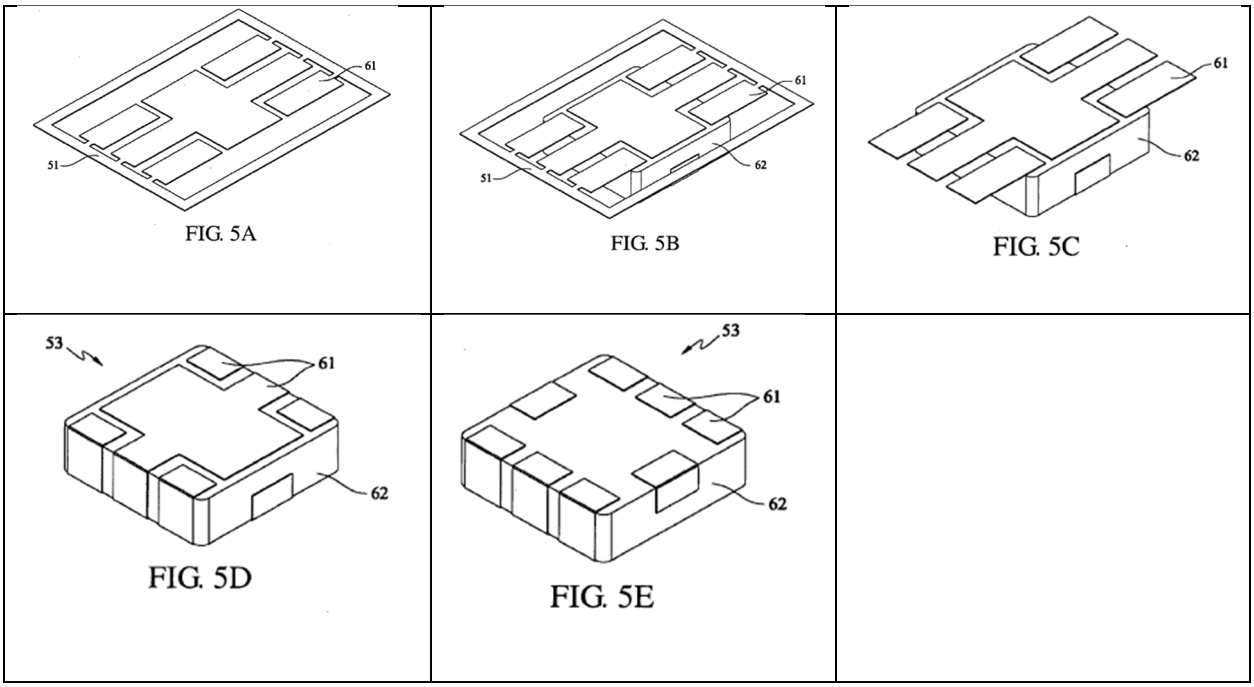

Id., Figs. 5A-5E, [0062]-[0063].

In the second embodiment (DC to DC converter 70), "the second electronic components 72, 73 [capacitors] … make a physical and electrical connection directly with the connecting conductor 71 on an outer surface of the inductive component 74." *Id*., [0071]. "More specifically, the [capacitors] [] [] 72, 73 are mounted directly onto the connecting conductor 71 as shown in FIG. 7A." *Id*. In one example, "the first conductive layer 71 wraps a surface of the first electronic component (i.e., an inductor) 74." *Id*. "However, in other examples of this embodiment, the first conductive layer 71 may instead be wrapped on a surface of the [control chip] or the [FET] … and then the [capacitors] 72, 73 are attached directly onto the first conductive layer 71 that wraps the surface of the [control chip] or the [FET]." *Id*., [0072]. Figs. 7A-B; *see also* Figs. 8A-B.

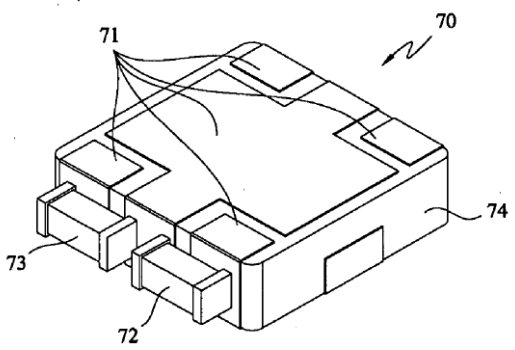

FIG. 7A

In the third embodiment (DC to DC converter 110), "the connecting conductor has four pins 118 and a conductor 113 connected therewith, and the pin conductor has two pins 117 and a conductor 113 connected therewith. The first conductive layer 112 wraps a first surface of the outer surface of the stacked co-fired magnetic material substrate 111. The first surface comprises a top surface, a bottom surface and side surfaces." *Id.*, [0073], Figs. 11A-G.

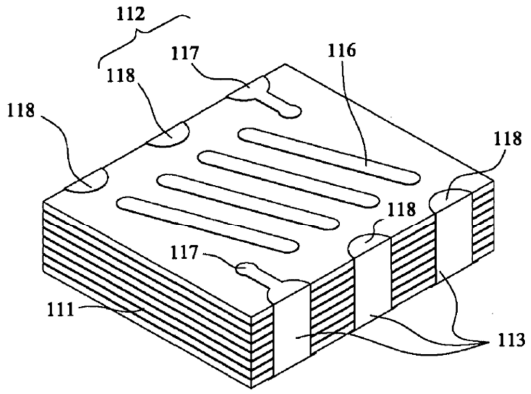

FIG. 11D

In the fourth embodiment (DC to DC converter 120), the "connecting conductor [has] four pins 124 and a pin conductor having two pins 126. Each of the pins 124 of the connecting conductor and the pins 126 of the pin conductor has

a conductor 129." *Id.*, [0077]. "The first conductive layer 123 wraps a first surface of the outer surface of the magnetic material substrate 125. The first surface comprises a top surface, a bottom surface and side surfaces." *Id.*, [0078], Figs. 12A-D.

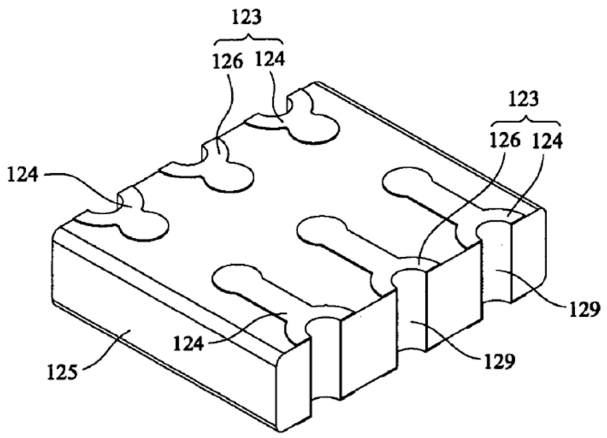

FIG. 12C

3. Analysis

[13pre] A power supply apparatus, comprising:

Vinciarelli-218 discloses this element. VICOR-1003, ¶¶66, 112. Vinciarelli-218's "invention relates to the field of encapsulating electronic assemblies and more particularly to encapsulated power converters." VICOR-1006, [0002]; *see also* Figs. 10, 16, 18, 33, [0004], [0021]-[0022]. A power converter is a power supply apparatus. VICOR-1003, ¶¶66, 112.

[13a] a bearing plate

Vinciarelli-218 discloses a bearing plate ("a printed circuit board 'PCB'" 804). VICOR-1003, ¶¶67, 113; VICOR-1006, Figs. 33-36, [0158]-[0160].

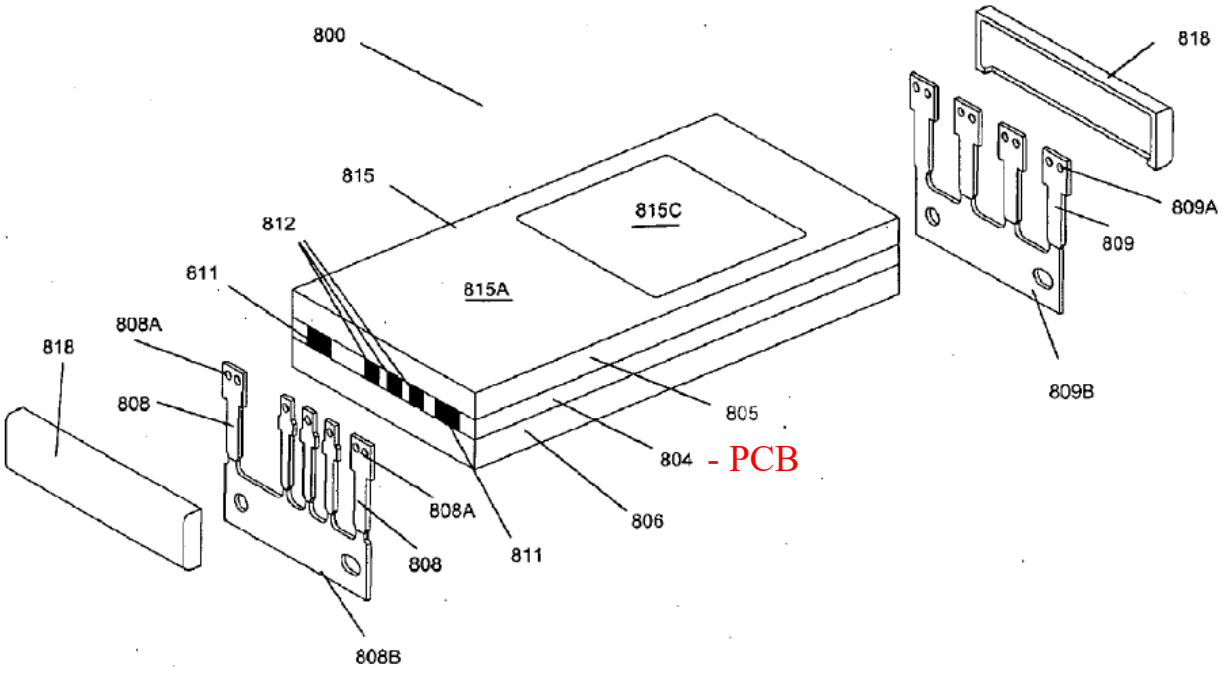

FIG. 35

VICOR-1006, Fig. 35 (annotated); *see also* Figs. 33-36. Although PCB 804 is shown in Figs. 33-36, it does not appear to be mentioned in the specification for these figures. However, the presence of a PCB is clear, because the embodiment of Figs. 33-35 has a layer 804, which is the same as the PCB layer shown in Figs. 16 and 17. VICOR-1003, ¶¶67, 113; VICOR-1006, Figs. 16, 17, [0115], [0119], [0159] ("[c]omparing the singulated module 815 (FIG. 33) with the singulated modules 215 (FIG. 16) and 315 (FIG. 17)"). At a minimum, it would have been obvious to use a PCB as element 804 for the same reason a PCB is used in Vinciarelli-218's other embodiments. *Id*.

[13b] insulation material formed on two opposite surfaces of the bearing plate

Vinciarelli-218 discloses an insulation material (encapsulant layers 805 and

806) formed on two opposite surfaces (the "top surface" and the "bottom surface") of the bearing plate (PCB 804) as shown below in Fig. 35. VICOR-1003, ¶68; VICOR-1006, Figs. 33-36, [0159] ("the top 815A and bottom 815B surfaces of the singulated module 815 are defined by the cured encapsulant 805, 806 in which the magnetic core surfaces 815C, 815D are exposed.").

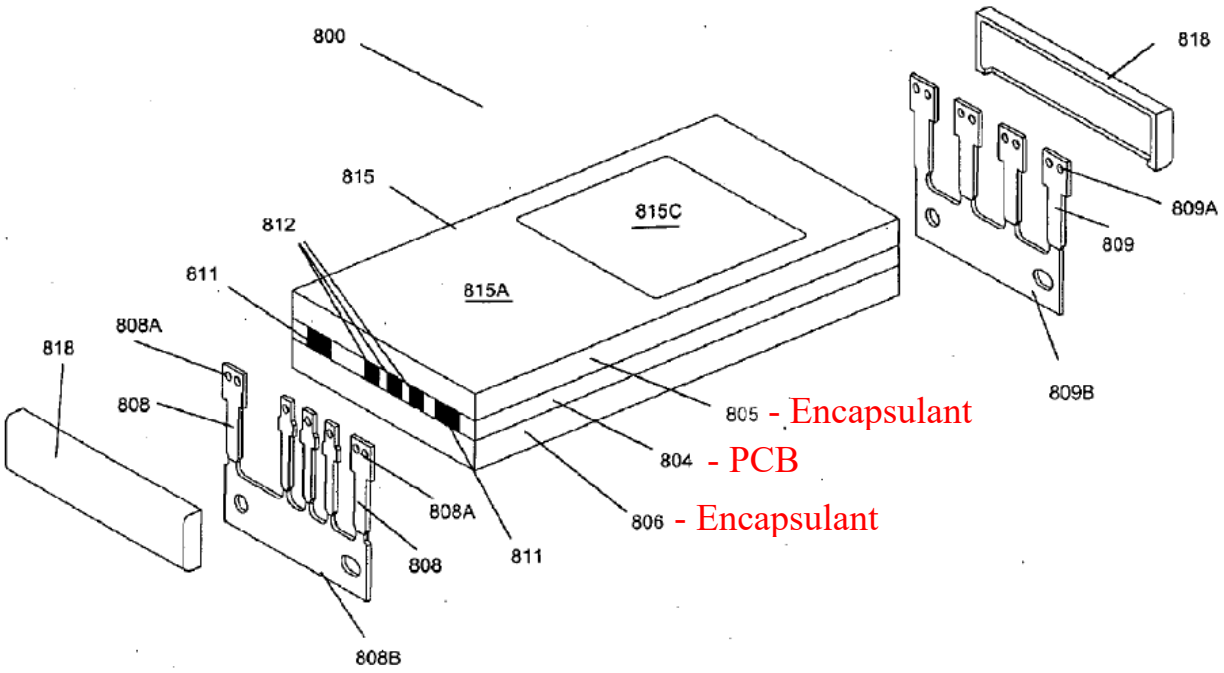

FIG. 35

VICOR-1006, Fig. 35.

A skilled artisan would have known that the encapsulants layers 805, 806 are an insulation material that is formed on the two opposite surfaces of PCB 804. *Id*. Indeed, U.S. Pat. No. 7,361,844 (VICOR-1014), which is incorporated by reference into Vinciarelli-218, states (at 11:33-35): "The top and bottom surfaces of the circuit board may be encapsulated in thermally conductive epoxy (e.g.,

EME-LK4-2, manufactured by Sumitomo Bakelite Co. Ltd.)." Epoxy (without conductive additives) is known to be non-conductive. VICOR-1003, ¶68; *see also, e.g.,* Fjelstad, U.S. Patent No. 10,285,270 (VICOR-1008), 10:10-11 (identifying "epoxy resin" as "an insulating material").

[13c] at least one pin electrically connected to the bearing plate and contacting at least part of the insulation material, wherein the pin covers at least part of a lower surface, at least part of an upper surface of the insulation material and at least part of two lateral sides of the bearing plate.

It would have been obvious to modify Vinciarelli-218 to use Zeng-014's connecting/pin conductors (connecting conductors 40 and pin conductor 40′; pins 117/118 and conductor 113; or pins 124/126 and conductor 129), which would result in the structure claimed. VICOR-1003, ¶¶70-86, 114. The Vinciarelli-218/Zeng-014 combination would have a plurality of pins as disclosed in Vinciarelli-218 (VICOR-1006, Fig. 35) and Zeng-014 (VICOR-1007, Figs. 4A-D, 11A-G, 12A-D), wherein the pins are similar to Zeng-014's connecting/pin conductors. VICOR-1003, ¶¶70-86, 114.

The components on the PCB in Vinciarelli-218 are electrically connected to the perimeter of the PCB. VICOR-1006, [0013]-[0019], [0107]-[0111]. Vinciarelli-218 discloses contacts (interconnects 811-813) to electrically connect the power converter module to other devices or circuits boards, but it does not disclose a pin as claimed. VICOR-1003, ¶¶70-86, 114; VICOR-1006, Figs. 33-36, [0160]. Specifically, Vinciarelli-218 discloses "exposed interconnects 811, 812 at

the edges of the singulated module 815" that, as shown in Fig. 35, are embedded in the edge of PCB 804. VICOR-1006, [0160], FIG. 35.

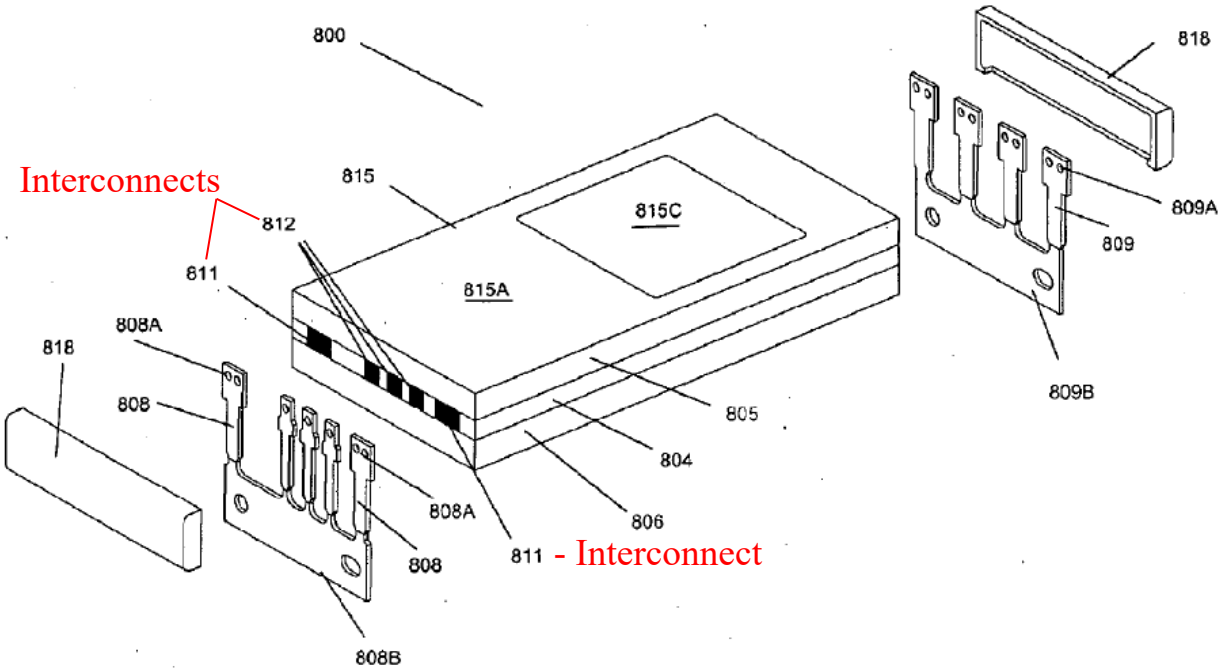

FIG. 35

VICOR-1006, Fig. 35.

Vinciarelli-218 further explains that "various types of connectors [and] adapters may be coupled to the exposed interconnects 811, 812 at the edges of the singulated module 815." *Id.*, [0160]. For example, connectors may be "formed for example by a precision metal stamping process. Initially, the terminal portions 808 may be coupled to a lead frame 808B as shown in FIGS. 35 and 36 forming a unitary unit for ease of assembly." *Id.*

Similarly, Zeng-014 discloses various "connecting conductor[s]" and "pin conductors," including those shown below, that would be used in place of Vinciarelli-218's connectors:

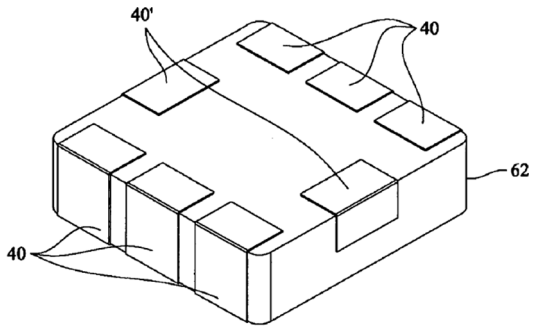

FIG. 4A

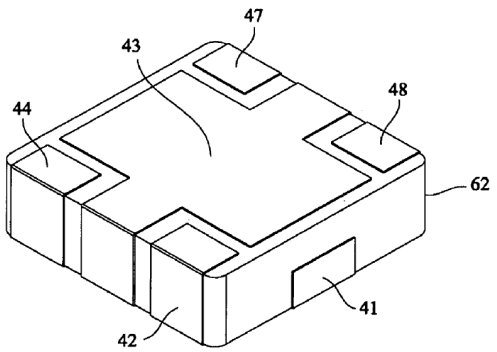

FIG. 4D

The Vinciarelli-218/Zeng-014 combination includes at least one pin (like Zeng-014's central contact 43) electrically connected (via one or more of Vinciarelli-218's interconnects 811, 812) to the bearing plate (Vinciarelli-218's PCB 804) and contacting at least part of the insulation material (Vinciarelli-218's encapsulation layer 805 and/or 806). VICOR-1003, ¶¶70-86, 114. In the combination, the same pin also covers at least part of the lower surface (the bottom), at least part of the upper surface (the top) of the insulation material, and at least part of two lateral sides of the bearing plate (the lateral sides that include interconnects). Indeed, as shown in Zeng-014, the arms of central contact 43 wrap around the sides of the module such that there are contacts on the top, bottom, and two lateral sides of the module. VICOR-1008, Fig. 5B. A skilled artisan would, for example, make the central contact a common contact that would electrically

connect to the "bar code" interconnects on the lateral side of printed circuit board and that would provide shielding to the exposed core embodiment as depicted in Vinciarelli-218, FIG. 35.

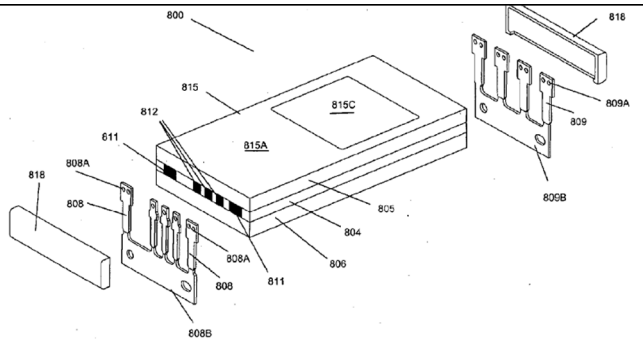

FIG. 35

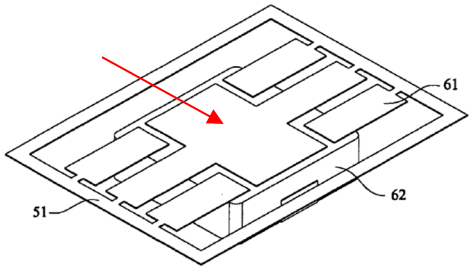

FIG. 5B

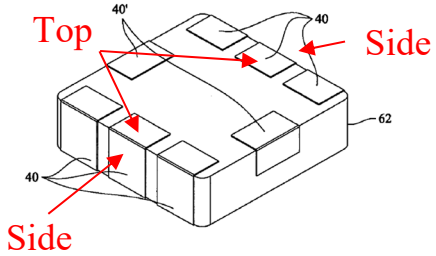

FIG. 4A

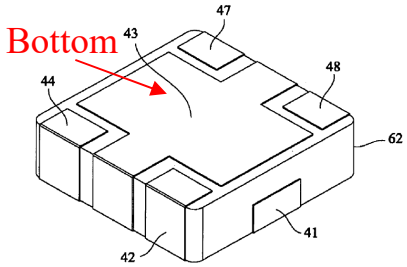

FIG. 4D

Vinciarelli-218	Zeng-014

A skilled artisan would have been motivated to modify Vinciarelli-218 as described above for several reasons. VICOR-1003, ¶¶70-86, 114.

First, Vinciarelli-218 discloses that many variations for the power converter module, including variations for contacts to external components or circuits, such

as through-hole and surface mount options. VICOR-1006, Figs. 15-26, 33-36. Vinciarelli-218 further discloses that it may be beneficial to have a module that is press-fit into a surface mount adapter or flush mounted to a motherboard. *Id*., [0124]-[0125], [0130]-[0133]. Vinciarelli-218 further teaches the desirability of "decreasing [the] mounting area on [a] customer motherboard." *Id*., [0003].

Second, the skilled artisan would turn to Zeng-014 given Zeng-014's teaching that board space can be saved by using Zeng-014's connecting and pin conductors to "stack[]" external components on the component using the surface conductors. VICOR-1007, Abstract, [0013], FIGs. 11A, 12A; VICOR-1003, ¶80. Since Vinciarelli-218 discloses a component that is a DC-DC power converter module, a skilled artisan would understand that enabling electrically connected stacking would permit, for example, multiple DC-DC power converter modules to connected in parallel to increase power throughput without taking up additional board space, thereby increasing power density. VICOR-1003, ¶80 (discussing VICOR-1015). A skilled artisan would have been further motivated to use the connecting and pin conductors of Zeng-014 to allow other types of components to stack on top of the power converter. *Id*. For example, input or output capacitors would be placed on top of the power converter. *Id*. (discussing VICOR-1016). A skilled artisan would also be motivated to put a load on top of the power converter to save board space. *Id*. In these applications, the "conductor region 43" of Zeng-

014, which may act "as a power pin," (VICOR-1007, [0059]) would connect to output power interconnects on the Vinciarelli-218 PCB (in an embodiment with suitable insulation between the conductor region and any core of the transformer). Alternatively, "conductor region 43" in the combination would be ground and provide shielding to the transformer cores (which could be exposed) and power would be provided on a different conductor. In either situation, power converter 800 would provide power to stacked components as well as components on the customer printed circuit board. VICOR-1007, [0059], VICOR-1006, [0013]-[0019]. When "conductor region 43" of Zeng-014 is wrapped around the module 800, the conductors would contact interconnects at the perimeter of the PCB of module 800 and thus would become pin conductors in the combination. VICOR-1003, ¶80 (discussing Vinciarelli-166's disclosure of parallel power converters and Design Guide's disclosure of input/output capacitors).

Third, a skilled artisan would have recognized that Zeng-014's connecting and pin conductors provides a flush surface mount identified as desirable in Vinciarelli-218 without the need for a surface mount adapter. VICOR-1003, ¶81.

Fourth, Zeng-014 teaches that the inductor in the figures "is only for purpose[s] of illustration, and in practice, the technology disclosed in [Zeng-014] may be applied to other electronic component[s]." VICOR-1007, [0057]. Thus, a skilled artisan would have recognized Zeng-014's applicability to the power

converter modules of Vinciarelli-218, which are electronic components having a cuboid general form factor like the inductor component of Zeng-014. VICOR-1003, ¶82.

Fifth, Vinciarelli-218 and Zeng-014 both concern improvements to small power converters to provide increased "power density" and decreasing the circuit board "area" used by the power converters. VICOR-1006, [0003], VICOR-1007, [0003], [0008], [0010], [0065]. A skilled artisan would thus turn to both references given their common concerns to apply beneficial features of each reference. VICOR-1003, ¶83.

A skilled artisan applying the teachings of Zeng-014 to Vinciarelli-218 would have been motivated to reduce the space used by the contact adapters of Vinciarelli-218 by applying Zeng-014's connecting/pin conductors to Vinciarelli-218's module to provide contact surfaces on the top, bottom, and sides of the module, as taught by Zeng-014. One example of how this modification would be performed can be illustrated by Fig. 35 of Vinciarelli-218 and Figs. 5A-E of Zeng-014. Figure 35 of Vinciarelli-218 depicts a module with PCB edge contacts 811, 812 that are mated with contacts on lead frames 808B and 809B. In the combination, the lead frames in Vinciarelli-218 would be replaced by the lead frame in Zeng-014 and the lead would be curved over module 800 from the bottom to the top. The PCB edge contacts and dimensions of the surface contacts would

be adjusted based on design needs so that the needed signals were brought to the PCB. VICOR-1006, Fig. 36, [0160]; VICOR-1007, Figs. 5A-5E, [0058]-[0059], [0062]-[0064]; VICOR-1003, ¶84.

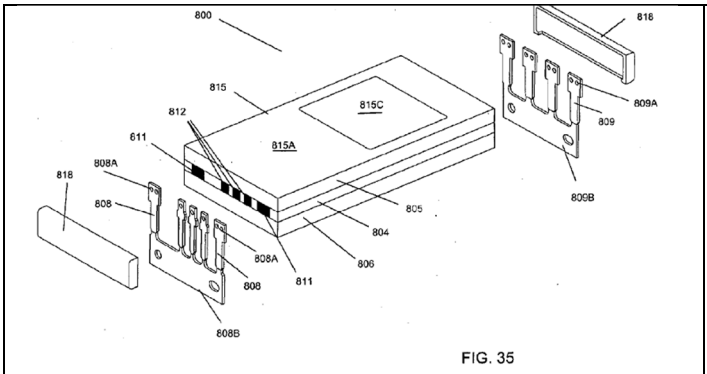 FIG. 35	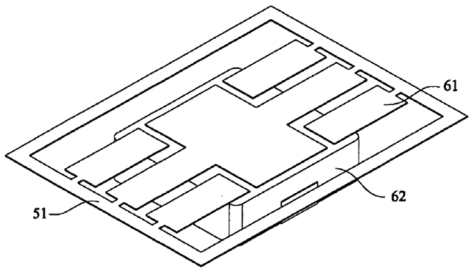 FIG. 5B
Vinciarelli-218	**Zeng-014**

A skilled artisan also would have reasonably expected to succeed because the modifications proposed here would have been well within the skilled artisan's abilities. VICOR-1003, ¶86. Indeed, it would have been merely the application of a known technique (using connecting/pin conductors, as taught by Zeng-014) with a known system (Vinciarelli-218's module) in the same field of endeavor (power converters). *Id.*; *KSR Int'l Co. v. Teleflex Inc.*, 550 U.S. 398, 417 (2007). And, in the combination, each element merely performs the same predictable function as it does separately, without significantly altering or hindering the functions performed by Vinciarelli-218's module or Zeng-014's connecting conductors. VICOR-1003, ¶86. In fact, the Vinciarelli-218 module would continue to perform all the functions it performed before the proposed modification. *Id*. In addition, the modification is a mechanical modification based on the teachings of Zeng-014 that

provides fewer parts for assembly. *Id*.

14. The power supply apparatus of claim 13, further comprising: at least one first pad disposed on a lateral side of the bearing plate, wherein the pin is electrically connected to the first pad, and the first pad is electrically connected to the bearing plate.

Vinciarelli-218 discloses a plurality of first pads (interconnects 811 and 812, shown below) disposed on the bearing plate as well as similar interconnects (not visible in Figs. 33-36) disposed on the opposite side of the bearing plate. VICOR-1003, ¶¶87-88, 115; VICOR-1006, Figs. 33-36, [0159]-[0160]. As shown below, the pads are disposed on lateral sides of the bearing plate. *Id*. In the combination, the side contact portions of the Zeng-014's pins are electrically coupled to the pads (Vinciarelli-218's interconnects 811, 812), which are electrically connected to the PCB. VICOR, 1003, ¶¶87-88, 115; VICOR-1006, Figs. 33-36, [0160].

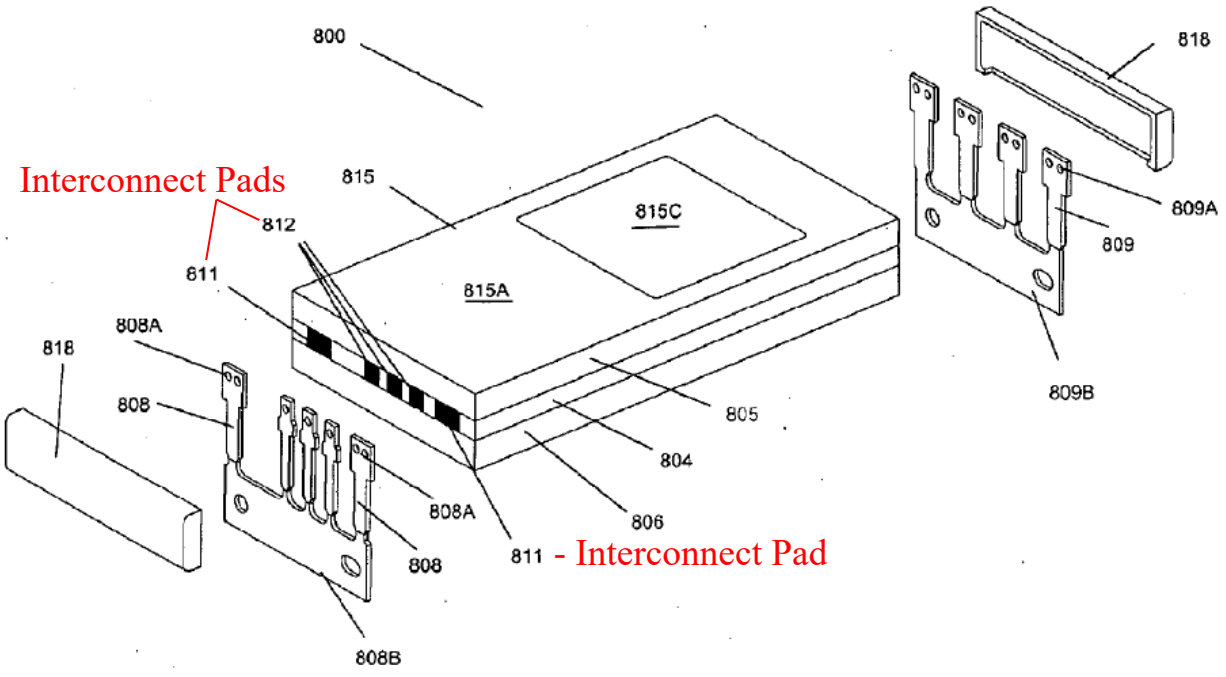

FIG. 35

VICOR-1006, Fig. 35.

15. The power supply apparatus of claim 13, wherein at least one lateral side of the bearing plate is exposed from the insulation material.

See Ground 1, Elements [13b] (demonstrating that opposite surfaces of the bearing plate are covered with insulation material) and [13c] (demonstrating that at least one lateral side of the bearing plate is exposed from the insulation material and thus reveals Vinciarelli-218's interconnects 811, 812).

16. The power supply apparatus of claim 13, wherein two terminals of the pin have SMD pads located at the upper surface of the insulation material.

See Ground 1, Elements [13c]. In the Vinciarelli-218/Zeng-014 combination, the two terminals of the pin, which are like the two terminals of conducting region 43 in Zeng-014 (identified below), have SMD pads located at the upper (top) surface of the insulation material (Vinciarelli-218's encapsulation layer 805). Although Zeng-014 characterizes the surface visible in FIG. 4A (which is similar to the surface in FIG. 4C) as the "bottom" surface (VICOR-1007, [0058]), Zeng-014 inverts the component when it is mounted to other components, as shown in FIGs. 6A-6C. Accordingly, a skilled artisan would have understood that the identifiers "top" and "bottom" depend on orientation, and that the surface identified as the "bottom" of component 62 becomes the "upper surface" of the component in Figs. 6B and 6C. A skilled artisan would have understood that the components would be used in different orientations such that either surface would

be the "top" or "bottom" depending on the design. A skilled artisan would have been motivated to make the "top" of component 62 of Zeng-014 the "bottom" as shown when Zeng-014 uses the component in a circuit. VICOR-1003, ¶¶117.

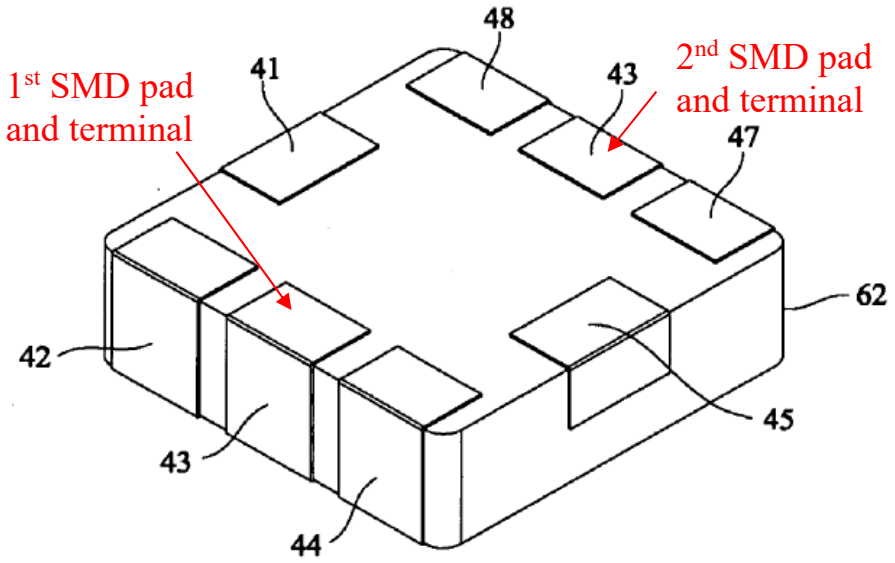

FIG. 4C

VICOR-1006, Fig. 4C.

[17pre] A power supply apparatus, comprising:

See Ground 1, Element [13pre].

[17a] a bearing plate

See Ground 1, Element [13a].

[17b] insulation material formed on two opposite surfaces of the bearing plate

See Ground 1, Element [13b].

[17c] at least one pin electrically connected to the bearing plate and contacting at least part of the insulation material, wherein the bearing plate is embedded in the insulation material to form a cuboid body, and the pin covers at least part of

a lower surface, at least part of an upper surface and at least part of two lateral sides of the cuboid body.

See Ground 1, Element [13c] (confirming that the Vinciarelli-218/Zeng-014 combination includes at least one pin electrically connected to the bearing plate and contacting at least part of the insulation material, wherein the pin covers at least part of an upper surface and at least part of two lateral sides of the cuboid body). In the Vinciarelli-218/Zeng-014 combination, the bearing plate (Vinciarelli-218's PCB 804) is also embedded in the insulation material (encapsulation layers 805, 806) to form a cuboid body as shown below in Figure 35 of Vinciarelli-218. VICOR-1003, ¶¶108-109, 114, 121.

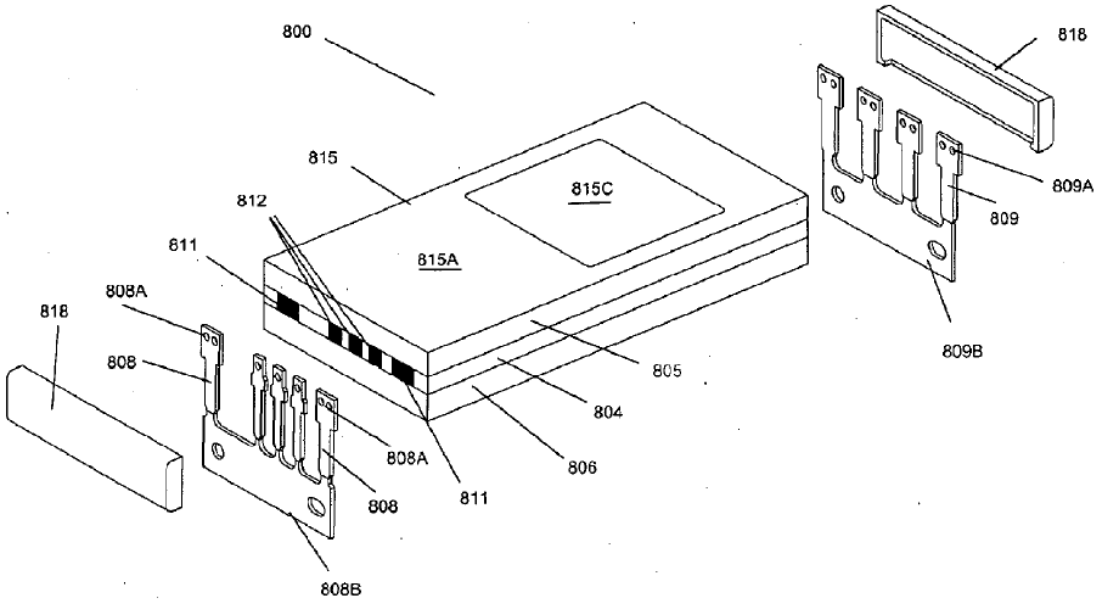

FIG. 35

VICOR-1006, Fig. 35.

18. The power supply apparatus of claim 17, wherein two terminals of the pin have SMD pads located at the upper surface of the cuboid body.

See Ground 1, Claim 16. The analysis for claim 16 applies equally to the power supply apparatus of claim 17. VICOR-1003, ¶122.

19. The power supply apparatus of claim 17, further comprising: at least one first pad disposed on a lateral side of the bearing plate, wherein the pin is electrically connected to the first pad, and the first pad is electrically connected to the bearing plate

See Ground 1, Claim 14. The analysis for claim 16 applies equally to the power supply apparatus of claim 17. VICOR-1003, ¶123.

B. GROUND 2 – Claims 13-15, 17, and 19 are Anticipated by Park

1. Summary of Park

Park discloses a packaging design for a power supply apparatus, namely a power management integrated circuit (PMIC). VICOR-1009, [0005]. The PMIC may include DC/DC converters. *Id*., [0183].

Specifically, Park discloses an arrangement, like that of Fig. 1, comprising an inductor module 120 combined together with a capacitor module 110 as part of a PMIC circuit. As can be seen in Fig. 1, capacitor module 110 is stacked on top of inductor module 120 to form composite component 100, such that capacitor module 110 does not increase the footprint of composite component 100, relative to inductor module 120 alone. VICOR-1009, [0068], Figs. 1-3, 13.

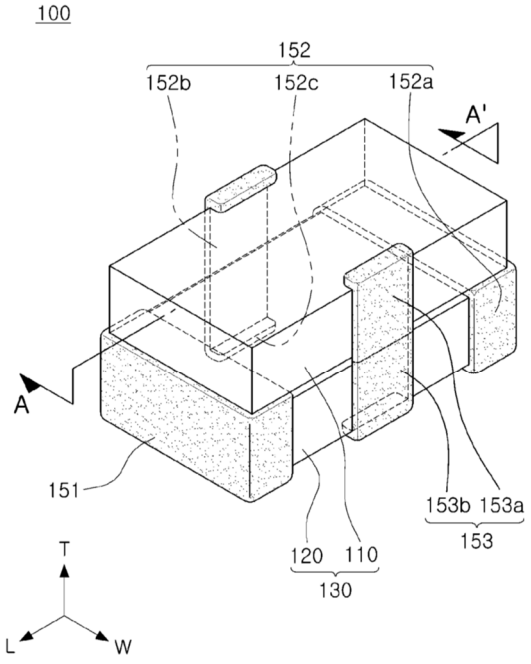
100
152
152b
152c
152a
A'
A
151
153b 153a
153
120 110
130
T
L
W

FIG. 1

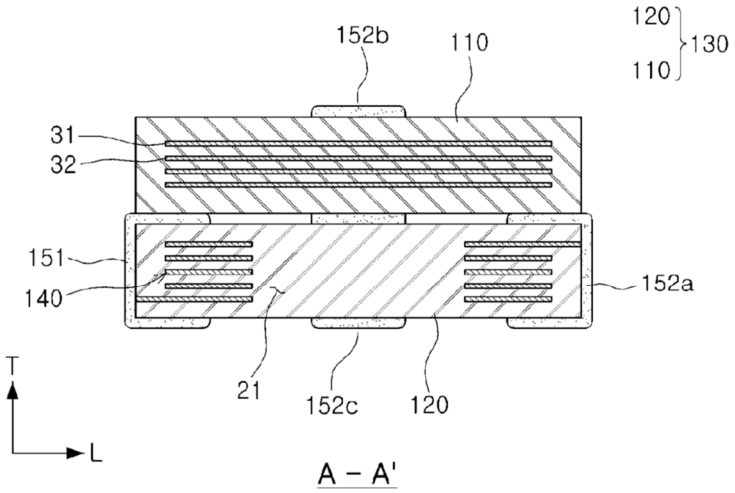
120
130
110
152b
110
31
32
151
140
152a
21
152c
120
T
L
A – A'

FIG. 2

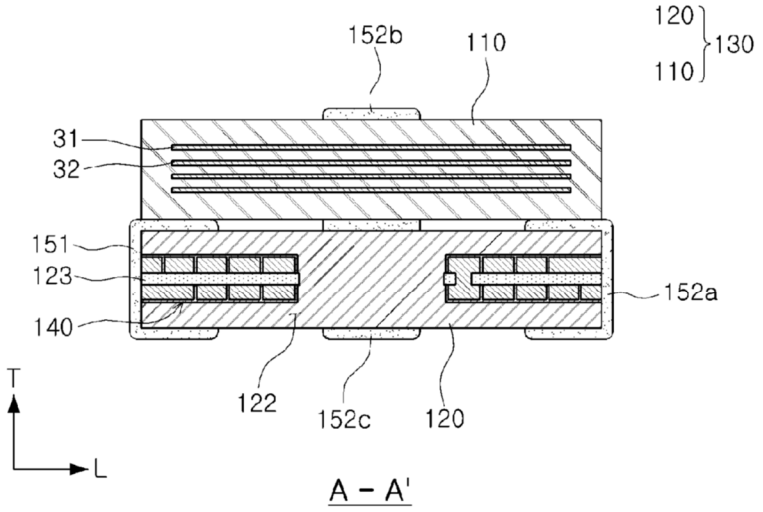

FIG. 3

The inductor module 120 includes an input electrode 151, and an output electrode 152a. VICOR-1009, [0100]. These electrodes are electrically connected to a coil unit (140) that is internal to the inductor component 120. As can be seen, the electrodes 151, 152a cover a portion of a top and bottom surface of the inductive component 120, as well as portions of two lateral sides of the inductive component. *Id*., [0122].

The inductor module 120 includes a magnet 122, which may be formed of a ferrite material, and which may fill the interior of the inductor module 120 up to its upper and lower surfaces. *Id*., [0080], [0090], Fig. 3. Ferrite is a magnetic material that is typically non-conductive and would need to be non-conductive in the disclosed embodiments to avoid shorting the input and output terminals. VICOR-1003, ¶155.

Park also teaches that a composite component, such as composite component

100, may be surface mounted to a circuit board 200, as shown in Figure 13, with the bottom surfaces of electrodes 151 and 152a forming surface mount electrical contact with conductive pads (221 and 222) on mounting board 200 through soldered connections. VICOR-1009, [0212]-[0223], Fig. 13.

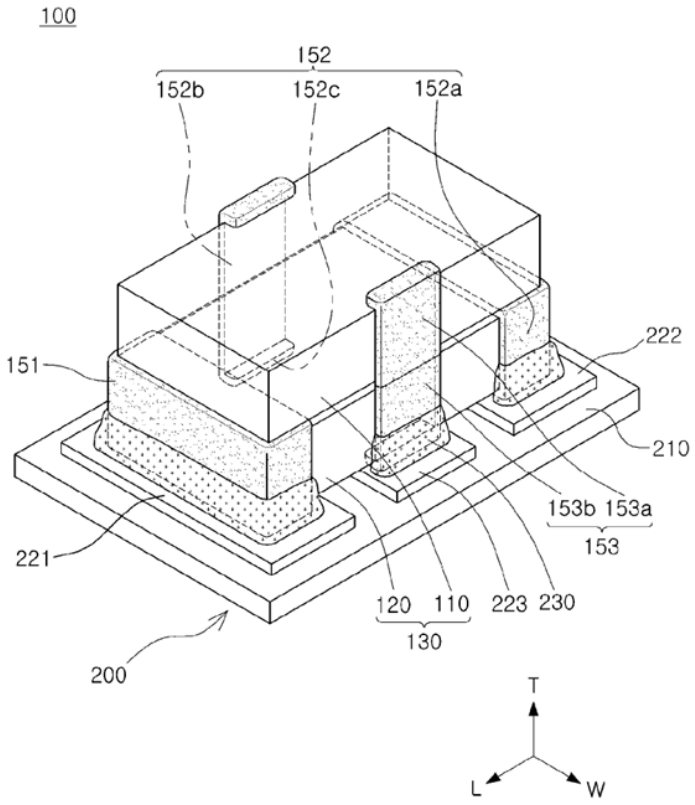

FIG. 13

Park describes a number of advantages to its composite component design (*id*., [0141]-[0144]):

> [0141] In addition, since the inductor 120 and the capacitor 11 are combined, a mounting area in the power management unit may be minimized, advantageously securing a mounting space.
>
> [0142] Also, mounting costs may be reduced.

> [0143] Also, in the composite electronic component, since the capacitor 110 is formed on the inductor 120, transmission of vibrations of the capacitor 110 due to inverse-piezoelectricity of the capacitor 110 when the composite electronic component is mounted on a board may be reduced to reduce acoustic noise.
>
> [0144] Also, since a bonding unit of the inductor and the capacitor is a conductive resin layer, damage such as cracks generated in the capacitor due to mechanical stress such as thermal shock, or the like, may be prevented

2. Analysis

[13pre] A power supply apparatus, comprising:

Park discloses this element. VICOR-1003, ¶¶158, 170. Park discloses a packaging design for a power supply apparatus, namely a power management integrated circuit (PMIC). VICOR-1009, [0005], Fig. 1. The PMIC may include DC/DC converters. *Id*., [0183], Fig. 10. Specifically, Park discloses a composite electronic component 100 (shown below in Fig. 1) comprising an inductor module 120 and a capacitor module 110. *Id*., [0068], Figs. 1-2.

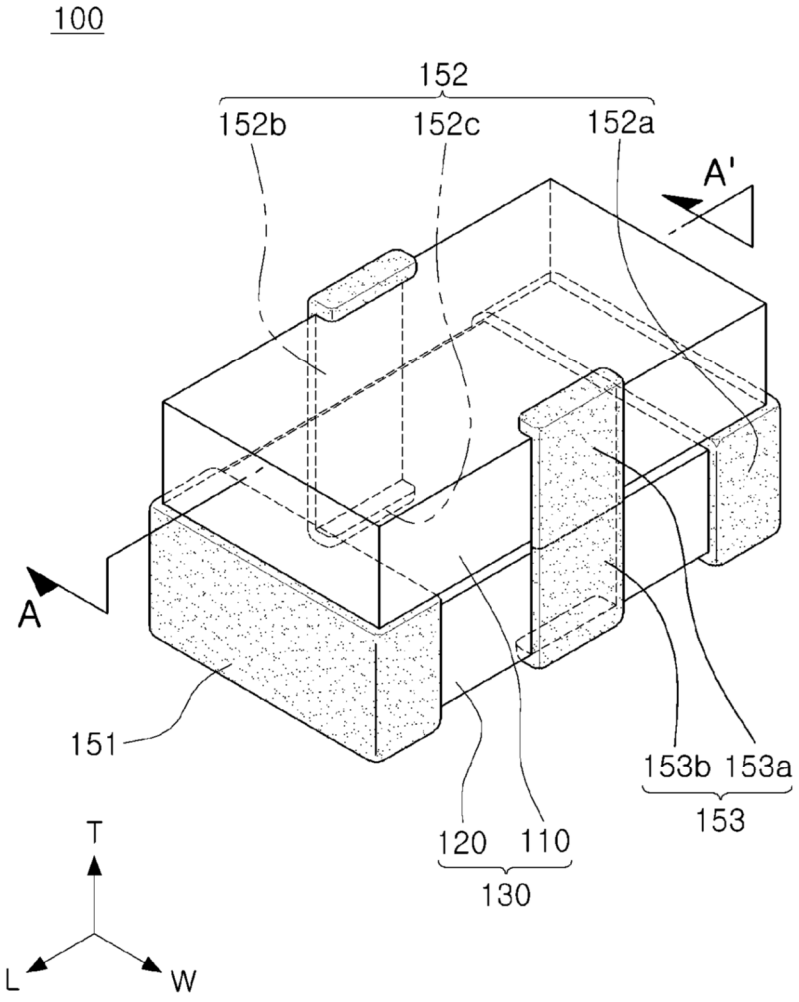

FIG. 1

[13a] a bearing plate

Park's composite electronic component 100 includes a bearing plate (inductor 120, substrate 123, or the combination of substrate 123 and coil 140). VICOR-1003, ¶¶159-160, 171; VICOR-1009, Figs. 1, 3, [0085]-[0086]. Inductor 120 is a bearing plate because it supports capacitor 110 on top of it. VICOR-1003, ¶159.

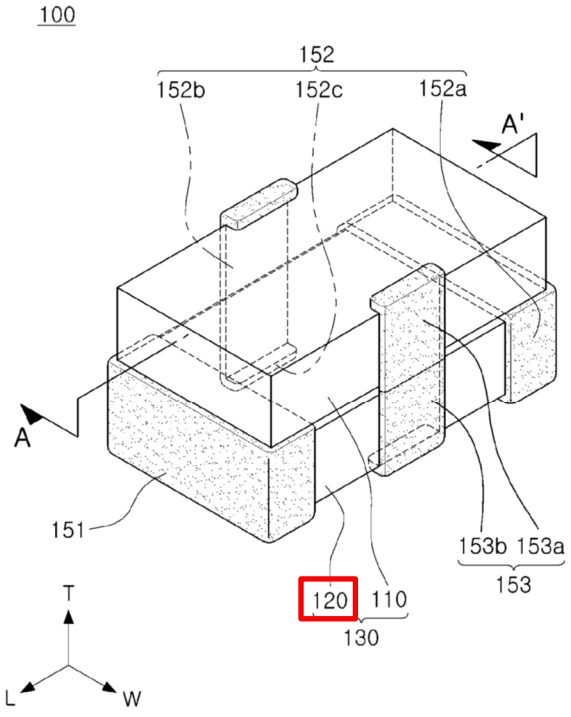

FIG. 1

VICOR-1009, Fig. 1.

Alternatively, Park discloses an insulating substrate 123, on the surface of which is formed an inductor coil unit 140. VICOR-1009, [0077], [0086], Fig. 3. The insulating substrate 123 may be considered the bearing plate. VICOR-1003, ¶160.

Similarly, substrate 123 is a bearing plate because it supports at least coil 140 (as well as portions of magnet 122 and conductor 110) on top of it. VICOR-1003, ¶160. And the combination of substrate 123 and coil 140 is a bearing plate because it supports at least portions of magnet 122 and capacitor 110 on top of it. *Id*.

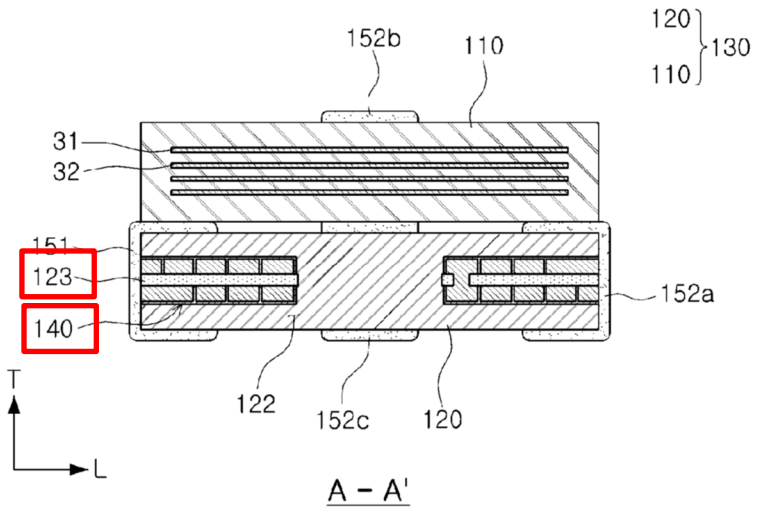

FIG. 3

VICOR-1009, Fig. 3 (annotated) (the figure is in cross section and a skilled artisan would understand that the two sides of the coil and substrate are connected).

[13b] insulation material formed on two opposite surfaces of the bearing plate

Park's composite electronic component 100 includes an insulation material (magnet 122 made of non-conductive ferrite) formed on two opposite surfaces (the top surface and the bottom surface) of the bearing plate (inductor 120, substrate 123, or the combination of substrate 123 and coil 140). VICOR-1003, ¶¶161-162, 172; VICOR-1009, [0080], [0087], [0090], Fig. 3. In Park, ferrite magnet 122 is necessarily, and would have been immediately envisaged to be, non-conductive to avoid shorting input and output electrodes 151 and 152a and thus constitutes an insulating material. VICOR-1003, ¶162.

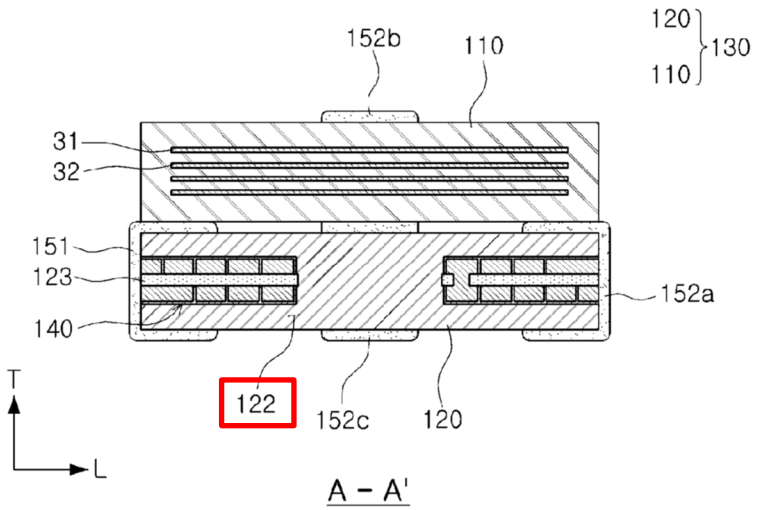

FIG. 3

VICOR-1009, Fig. 3 (annotated).

Indeed, ferrite magnet 122 is necessarily, and would have been immediately envisaged to be, an insulating material because electrodes 151, 152a, 152b and coil 140 are conductive elements. It is thus inherent that ferrite magnet 122—the only material separating those conductive elements—be an insulating material to prevent short circuits. *Id.*; VICOR-1003, ¶162.

[13c] at least one pin electrically connected to the bearing plate and contacting at least part of the insulation material, wherein the pin covers at least part of a lower surface, at least part of an upper surface of the insulation material and at least part of two lateral sides of the bearing plate.

Park's composite electronic component 100 includes at least one pin (electrode 151 or 152a) electrically connected to coil 140 of the bearing plate and contacting at least part of the insulation material, wherein the pin covers at least part of a lower surface (the bottom) and at least part of an upper surface (the top).

VICOR-1003, ¶¶163, 173. In Park's composite electronic component 100, each pin (electrode 151, 152a) also covers at least part of two lateral sides of the bearing plate. *Id.*; VICOR-1009, Figs. 1, 3 and related descriptions. Indeed, as shown below in Fig. 3, each electrode 151, 152a wraps around the sides of the module such that there are contacts on every side of the bearing plate. *Id.*

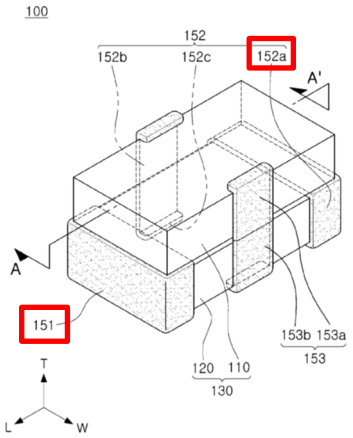

FIG. 1

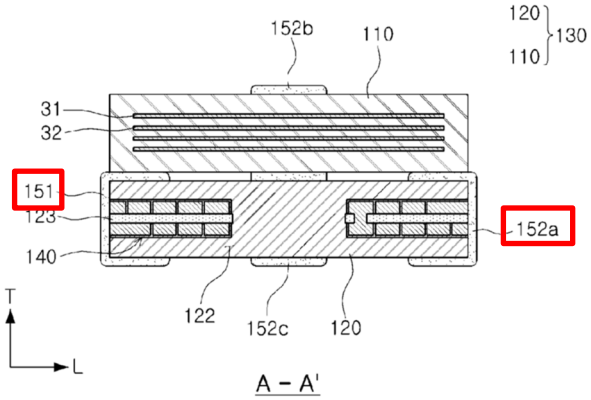

FIG. 3

VICOR-1009, Figs. 1, 3.

14. The power supply apparatus of claim 13, further comprising: at least one first pad disposed on a lateral side of the bearing plate, wherein the pin is electrically connected to the first pad, and the first pad is electrically connected to the bearing plate.

Park's composite electronic component 100 includes a plurality of first pads (the points of electrical connection identified below in the red boxes between coil unit 140 and electrodes 151, 152a). VICOR-1003, ¶¶164-165, 174; VICOR-1009, [0117], Fig. 3. As seen in Figure 3, coil unit 140, which is part of the bearing plate (inductor unit 120 or the combination of substrate 123 and coil 140), extends to the

lateral sides of the inductor unit 120 allowing the formation of an electrical connection between the coil unit and electrodes 151 and 152b. *Id*. These pads are disposed on lateral sides of the bearing plate. *Id*. And the pins (electrodes 151, 152a) are electrically connected to the pads (the points of electrical connection between coil unit 140 and electrodes 151, 152a), which are electrically connected to coil 140 of the bearing plate (inductor 120 or substrate 123/coil 140). VICOR, 1003, ¶¶164-165.

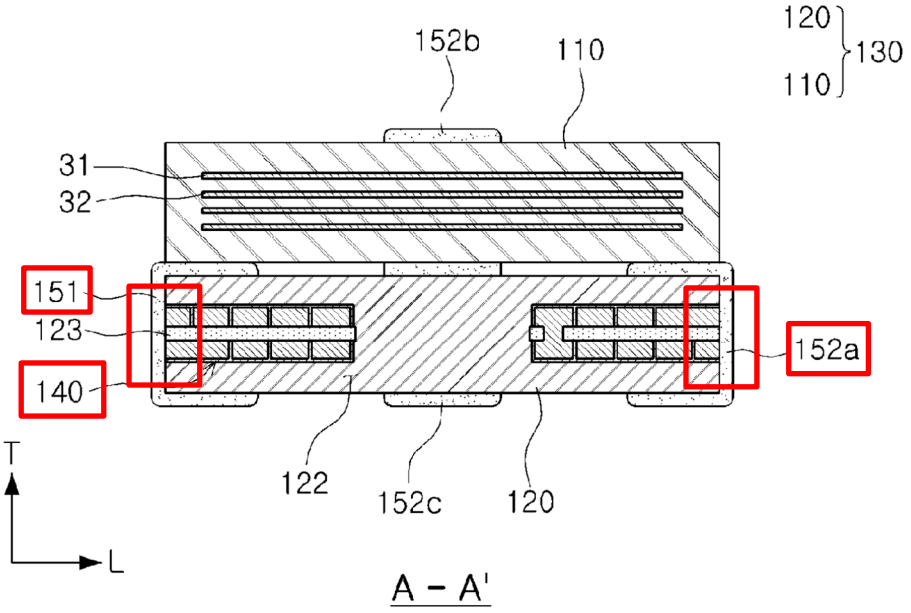

FIG. 3

VICOR-1009, Fig. 3.

15. The power supply apparatus of claim 13, wherein at least one lateral side of the bearing plate is exposed from the insulation material.

See Ground 2, Element [13b] (demonstrating that opposite surfaces of the bearing plate are covered with insulation material) and Claim 14 (demonstrating

that the plurality of pins are electrically connected to the plurality of first pads).

As shown below in Fig. 3, at least one lateral side (highlighted yellow in each red box) of the bearing plate is exposed from the insulation material (ferrite magnet 122) to permit the required electrical connection between the pins (electrodes 151, 152a) and the first pads (the points of electrical connection between coil unit 140 and electrodes 151, 152a) on lateral sides of inductor 120. VICOR-1003, ¶¶167, 175; VICOR-1009, Fig. 3.

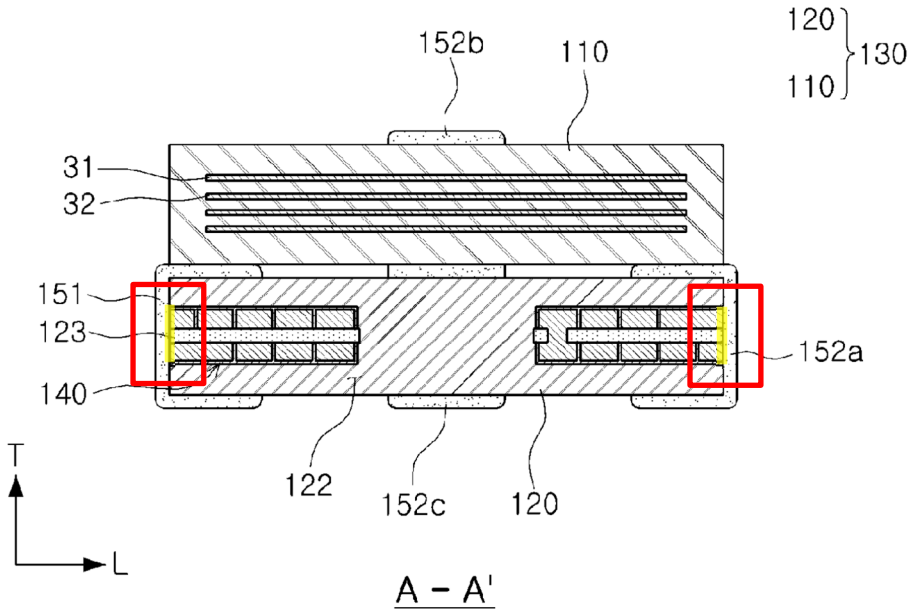

FIG. 3

VICOR-1009, Fig. 3.

[17pre] A power supply apparatus, comprising:

See Ground 2, Element [13pre].

[17a] a bearing plate

See Ground 2, Element [13a].

[17b] insulation material formed on two opposite surfaces of the bearing plate

See Ground 2, Element [13b].

[17c] at least one pin electrically connected to the bearing plate and contacting at least part of the insulation material, wherein the bearing plate is embedded in the insulation material to form a cuboid body, and the pin covers at least part of a lower surface, at least part of an upper surface and at least part of two lateral sides of the cuboid body.

See Ground 4, Element [13c] (confirming that the Park includes at least one pin electrically connected to the bearing plate and contacting at least part of the insulation material, wherein the pin covers at least part of a lower surface, at least part of an upper surface of the insulation material and at least part of two lateral sides of the bearing plate). In Park's composite electronic component 100, the bearing plate (substrate 123, or the combination of substrate 123 and coil 140) is also embedded in the insulation material (magnet 122 made of non-conductive ferrite) to form a cuboid body as shown below in Figures 1 and 3 of Park. VICOR-1003, ¶179.

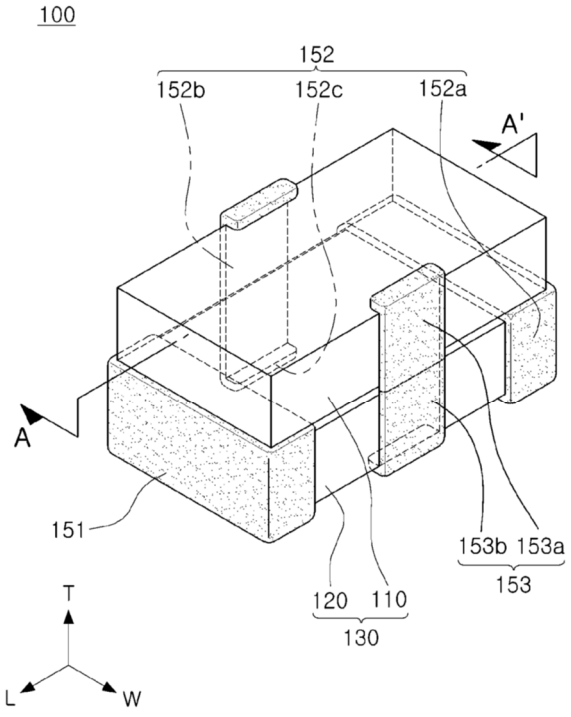

FIG. 1

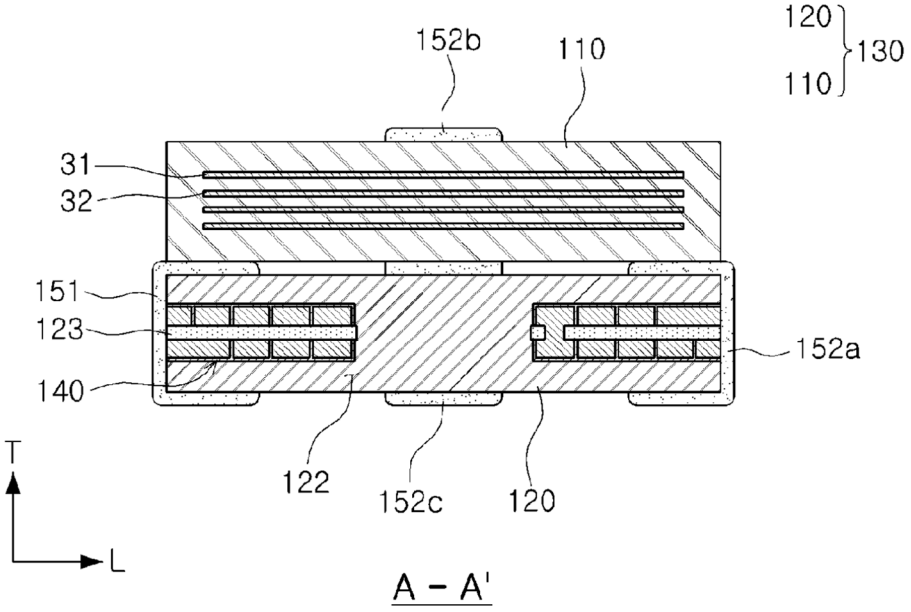

FIG. 3

VICOR-1009, Figs. 1, 3.

19. The power supply apparatus of claim 17, further comprising: at least one first pad disposed on a lateral side of the bearing plate, wherein the pin is electrically connected to the first pad, and the first pad is electrically connected to the bearing plate

See Ground 2, Claim 14. The analysis for claim 14 applies to the cuboid body of claim 17. VICOR-1003, ¶180.

C. GROUND 3 – Claims 13-15, 17, 19 are Obvious over Park Alone, and, if necessary, in Combination with Jun

As shown in Ground 4, Park discloses each element of claims 13-15, 17, 19. Each of those claims would also have been obvious over Park (in a single reference obviousness analysis) based on general knowledge in the art. VICOR-1003, ¶¶181-184. For example, Park expressly discloses insulation material (ferrite magnet 122). *See* Ground 2, Element [13b]. To the extent not immediately envisaged or inherent, it would have been obvious for ferrite magnet 122 to be an insulating material to prevent short circuits. VICOR-1003, ¶181. Similarly, a skilled artisan would have understood that Park's composite electronic component 100 includes a plurality of first pads (the points of electrical connection between coil unit 140 and electrodes 151, 152a) that are disposed on lateral sides of the bearing plate and are exposed from the insulation material. *See* Ground 2, Claim 14. To the extent not immediately envisaged or inherent, it would have been obvious in view of Jun to include such pads on lateral sides of the bearing plate

and expose those lateral sides of the bearing plate from the insulation material to provide the required electrical connection between coil unit 140 and electrodes 151, 152a. VICOR-1003, ¶181.

Jun (VICOR-1012) discloses a connection pad (connection bars 110, 210) disposed on a lateral side of a cuboid multilayer substrate (bearing plate) to connect an external electrode 104, 204 formed in the lateral side to internal circuitry of the substrate (pattern layer 102, 202). VICOR-1012, [0043]-[0056], Figs. 10, 12g. Jun teaches that the use of a connection bar, which penetrates multiple sheets of the multilayer substrate, advantageously creates a large connection area between internal circuitry and the external electrode, thereby improving the degree of electrical connection between the circuitry and the external electrode. VICOR-1012, [0080], VICOR-1003, ¶182. It would have been obvious to a skilled artisan to apply the teaching of Jun to form similar improved connections between the pins 151 and 152a of Park's composite body 130 and the inductor coil on substrate (bearing plate) 123 by deploying connection bars (pads) on lateral sides, as recited in claims 2, 3 and 11. VICOR-1003, ¶182.

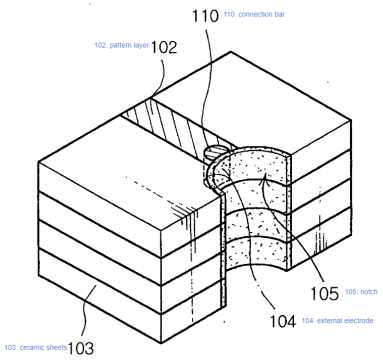

FIG. 10

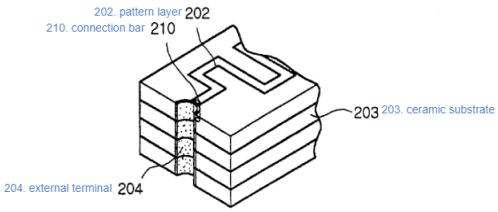

FIG. 12g

VICOR-1012, Figs. 10, 12g.

To the extent necessary, any such modification would have involved simple mechanical modifications (adding pads on the lateral side of a bearing plate) using known techniques and structures that would have been well-within the level of ordinary skill in the art and would have produced entirely predictable results. VICOR-1003, ¶¶183-184; VICOR-1012, Figs. 10, 12g, [0043]-[0056]; VICOR-1006, Fig. 35. Accordingly, a skilled artisan modifying Park as described here would have reasonably expected to succeed. VICOR-1003, ¶¶183-184.

D. GROUND 4 – Claims 13-15, 17, and 19 are Obvious over Vinciarelli-218 in view of Park

[13pre] A power supply apparatus, comprising:

See Ground 1, Element [13pre].

[13a] a bearing plate

See Ground 1, Element [13a].

[13b] insulation material formed on two opposite surfaces of the bearing plate

See Ground 1, Element [13b].

[13c] at least one pin electrically connected to the bearing plate and contacting at least part of the insulation material, wherein the pin covers at least part of a lower surface, at least part of an upper surface of the insulation material and at least part of two lateral sides of the bearing plate.

It would have been obvious use Park's electrodes 151, 152a with Vinciarelli-218's power converter. VICOR-1003, ¶¶203-215, 235. Although Vinciarelli-218's power converter is shown with multiple pads (interconnects) disposed on lateral sides of the cuboid body, Vinciarelli-218's interconnects are not limited to a single fixed pattern or location. VICOR-1003, ¶203, VICOR-1006, [0107], Figs. 10A, 10B. Accordingly, a skilled artisan would have found it obvious to design Vinciarelli-218's bearing plate (PCB) to include interconnects where they are needed (e.g., by placing one interconnect on each side to accommodate Park's electrodes 151, 152a). *Id*. For example, a skilled artisan would have been motivated to use one of Park's end electrodes for Vin, the other end electrode in Park as Vout and the side terminals would be connected to separate common contacts for an isolated converter or to ground for a non-isolated converter. To the extent additional electrodes were needed, Park describes additional electrodes 152b, and 153c that could electrically connect with additional interconnects on Vincarelli-218's power converter. For example, in one combination, electrode 151 would be used as an input terminal, electrode 152a would be used as an output terminal, and electrodes 152b and 153c would be used as ground terminals. Additional electrodes similar to 152b or 153c would be used for control signals as

well. A skilled artisan would have also been motivated to use other pin assignments depending on various design considerations that would not impact the operation of the power converter. VICOR-1003, ¶203.

In the resulting module, which would be a cuboid resembling Park's inductor 120 and having electrodes 151, 152a, the plurality of pins (Park's electrodes 151, 152a) are electrically connected (via Vinciarelli-218's interconnects) to the bearing plate (Vinciarelli-218's PCB) and contacting at least part of the insulation material, in accordance with Park. VICOR-1003, ¶204. Each pin also covers at least part of the lower surface (the bottom), at least part of the upper surface (the top) of the insulation material, and at least part of two lateral sides of the bearing plate. *Id*. Indeed, as shown below in Figs. 1 and 3 of Park, each electrode 151, 152a wraps around the sides of the module such that there are contacts on every side of the module. *Id*.

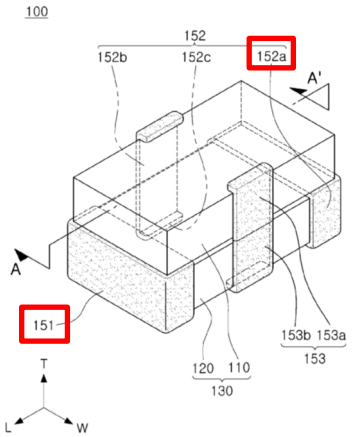

FIG. 1

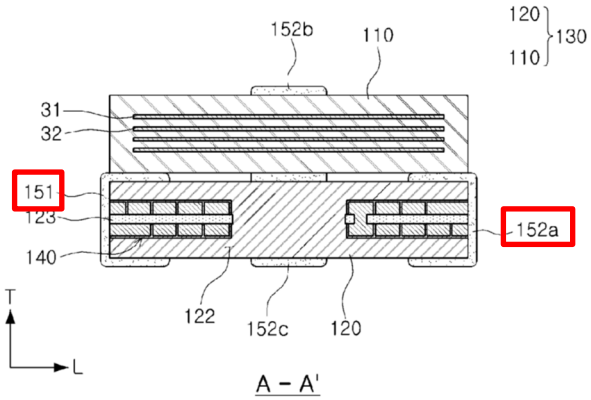

FIG. 3

VICOR-1009, Figs. 1, 3.

A skilled artisan would have been motivated to modify Vinciarelli-218 as described above for several reasons. VICOR-1003, ¶¶206-215.

First, Vinciarelli-218 discloses that many variations for the power converter module, including variations for contacts to external components or circuits, such as through-hole and surface mount options. VICOR-1006, Figs. 15-26, 33-36. Vinciarelli-218 further discloses that it may be beneficial to have a module that is press-fit into a surface mount adapter or flush mounted to a motherboard. *Id*., [0124]-[0125], [0130]-[0133]. Vinciarelli-218 further teaches the desirability of "decreasing [the] mounting area on [a] customer motherboard." *Id*., [0003].

Second, the skilled artisan would turn to Park given Park's teaching that board space can be saved by using Park's electrodes "for stacking" external components on the component using the external electrodes of Park. VICOR-1009, [0072], [0100], [0101], [0117]-[0125]. See discussion of the motivation to stack components for Ground 1, which is equally applicable to the Vinciarelli-218/Park combination. Since Vinciarelli-218 discloses a component that is a DC-DC power converter module, a skilled artisan would understand that enabling electrically connected stacking would permit, for example, multiple DC-DC power converter modules to connected in parallel to increase power throughput without taking up additional board space, thereby increasing power density. VICOR-1003,

¶208 (discussing Vinciarelli-166's disclosure of parallel power converters). In addition, power converters generally require input and output capacitors and a skilled artisan would have reason to stack them on top of the converter so they are close to the inputs and outputs. *Id.* (discussing Vicor's Design Guide).

Third, a skilled artisan would have recognized that Park's electrodes provide surface mount contacts identified as desirable in Vinciarelli-218 without the need for a surface mount adapter. VICOR-1003, ¶209.

Fourth, A skilled artisan would have recognized Park's applicability to the power converter modules of Vinciarelli-218, which are electronic components having a cuboid general form factor like the inductor component of Park. VICOR-1003, ¶210.

Fifth, Vinciarelli-218 and Park both concern improvements to small power converters and decreasing the circuit board "area" used by the power converters. VICOR-1006, [0003], VICOR-1009, [0141], [0188], [0209], [0228]. A skilled artisan would thus turn to both references given their common concerns to apply beneficial features of each reference. VICOR-1003, ¶211

A skilled artisan seeking to improve the contact structure of Vinciarelli-218 would turn to a reference such as Park for helpful teachings, and would have recognized that Park's electrode structure is not unique to single-component modules, but also applicable to multi-component modules, such as Vinciarelli-218.

VICOR-1003, ¶212. A skilled artisan would have recognized that Park's electrode structure would be applicable to a wide range of cuboid electronic modules, including the power converter of Vinciarelli-218. *Id*. A skilled artisan applying the teachings of Park to Vinciarelli-218 would have been motivated to reduce the space used by the contact adapters of Vinciarelli-218 by applying Park's electrodes to Vinciarelli-218's module to provide contact surfaces on the top, bottom, and sides of the module, as taught by Park. *Id*. One example of how this modification would be performed can be illustrated by Fig. 35 of Vinciarelli-218 and Fig 1. of Park.

Figure 35 of Vinciarelli-218 depicts a module with PCB edge contacts 811, 812 that are mated with contacts on lead frames 808B and 809B. VICOR-1006, Fig. 35 (and related descriptions). In the combination, the lead frames in Vinciarelli-218 would be replaced by the electrodes of Park. VICOR-1003, ¶213. Accordingly, the resulting module would resemble the combination of Park's inductor 120 and electrodes 151, 152a. *Id*.

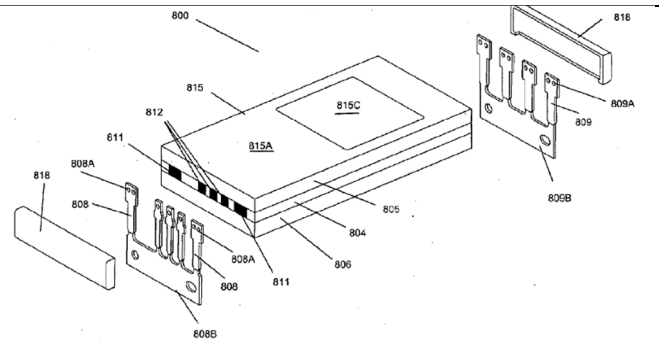 FIG. 35	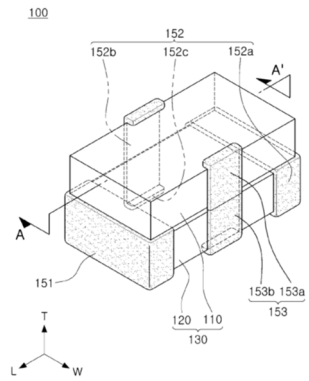 FIG. 1
Vinciarelli-218	**Park**

Although not required, it also would have been obvious to accommodate the multiple interconnects 811, 812 of Vinciarelli-218 with a combination of Park's side-mounted electrodes 153 and end-mounted electrodes 151, 152a. VICOR-1003, ¶214; VICOR-1006, Fig. 36, [0160]. For example, Park teaches that its electrodes may come in a variety of shapes. VICOR-1009, [0119], Fig. 1. And Vinciarelli-218 teaches that interconnects can be disposed along the long and/or short edges of the module. VICOR-1006, [0018], Figs. 10A-B.

A skilled artisan also would have reasonably expected to succeed because the modifications proposed here would have been well within the skilled artisan's abilities. VICOR-1003, ¶215. Indeed, it would have been merely the application of a known technique (using electrodes, as taught by Park) with a known system (Vinciarelli-218's module) in the same field of endeavor (power supplies). *KSR*, 550 U.S. at 417. And, in the combination, each element merely performs the same predictable function as it does separately, without significantly altering or

hindering the functions performed by Vinciarelli-218's module or Park's electrodes. In fact, the Vinciarelli-218 module would continue to perform all the functions it performed before the proposed modification. VICOR-1003, ¶215. In addition, the modification is a mechanical modification based on the teachings of Park that provides fewer parts for assembly. *Id*.

14. The power supply apparatus of claim 13, further comprising: at least one first pad disposed on a lateral side of the bearing plate, wherein the pin is electrically connected to the first pad, and the first pad is electrically connected to the bearing plate.

See Ground 1, Claim 14 (confirming that Vinciarelli-218 discloses a plurality of first pads disposed on a lateral side of the bearing plate and that, in the Vinciarelli-218/Zeng-014 combination, the side contact portions of Zeng014's pins are electrically coupled to the pads (Vinciarelli-218's interconnects 811, 812), which are electrically connected to the PCB). In the Vinciarelli-218/Park combination, the side contact portion of Park's pins (electrodes 151, 152a) are electrically connected to the similar pads, which are electrically connected to the bearing plate. VICOR, 1003, ¶¶216-217, 236; VICOR-1009, Figs. 1, 3.

15. The power supply apparatus of claim 13, wherein at least one lateral side of the bearing plate is exposed from the insulation material.

See Ground 1, Claim 15.

[17pre] A power supply apparatus, comprising:

See Ground 1, Element [13pre].

[17a] a bearing plate

See Ground 1, Element [13a].

[17b] insulation material formed on two opposite surfaces of the bearing plate

See Ground 1, Element [13b].

[17c] at least one pin electrically connected to the bearing plate and contacting at least part of the insulation material, wherein the bearing plate is embedded in the insulation material to form a cuboid body, and the pin covers at least part of a lower surface, at least part of an upper surface and at least part of two lateral sides of the cuboid body.

See Ground 4, Element [13c] (confirming that the Vinciarelli-218/Park combination includes at least one pin electrically connected to the bearing plate and contacting at least part of the insulation material, wherein the pin overs at least part of an upper surface and at least part of two lateral sides of the cuboid body); Ground 1, Element [17c] (confirming that the bearing plate (Vinciarelli-218's PCB 804) is embedded in the insulation material (encapsulation layers 805, 806) to form a cuboid body); VICOR-1003, ¶241.

19. The power supply apparatus of claim 17, further comprising: at least one first pad disposed on a lateral side of the bearing plate, wherein the pin is electrically connected to the first pad, and the first pad is electrically connected to the bearing plate

See Ground 4, Claim 14, Element [17c]. The analysis for claim 14 applies with equal force to the cuboid body of parent claim 17. VICOR-1003, ¶242.

E. GROUND 5 – Claims 13-19 are Anticipated by Vinciarelli-664

1. Summary of Vinciarelli-664

Vinciarelli-664, entitled "Method of Electrically Interconnecting Circuit

Assemblies," concerns a method of making a power module by forming a panel of a plurality of power modules, and wherein each power module has a printed circuit board (PCB) having buried conductive interconnects or "bar codes" that are exposed by drilling holes in the panel to form a pattern of recesses in the lateral sides of the module. VICOR-1010, Abstract. The process further involves forming exterior metal contacts over the exposed interconnects via an electroplating method that forms metal contacts in the recesses over the exposed interconnects, so that the metal contacts connect with circuitry in the PCB.

Figure 9 depicts a portion of panel of identical modules:

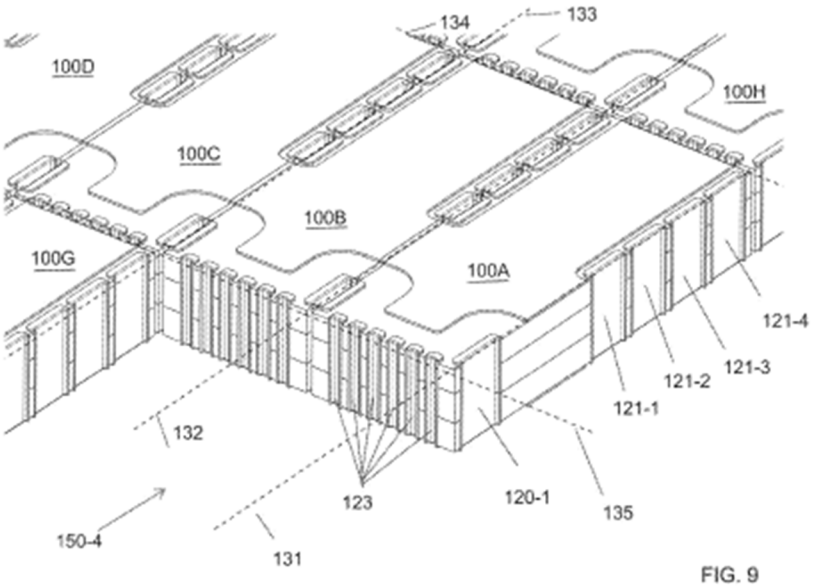

FIG. 9

Once a module is cut from the panel (the cutting process is called "singulation"), the module has a plurality of electrical contacts situated on all four sides of the

module and extending to the top and bottom of the module as well. VICOR-1010, 5:11-6:14; VICOR-1003, ¶251.

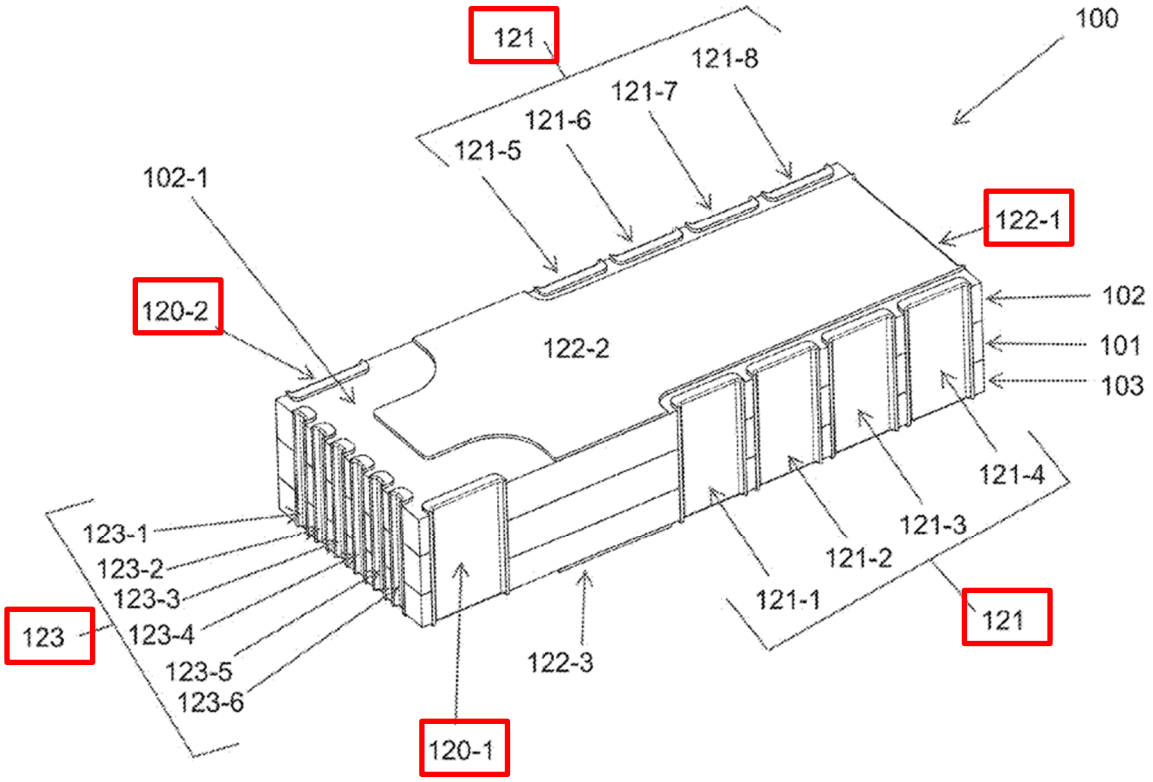

FIG. 1

As shown above in Figure 1 of Vinciarelli-664, the module has a "printed circuit board 101" in the center. The printed circuit board is "disposed between cured layers of encapsulant 102 and 103." *Id.*, 6:15-27. The encapsulant layers 102 and 103 cover some or all of the components mounted to either side of the printed circuit board and can provide top and bottom smooth surfaces for stacking modules. *Id.*, 6:15-27, 10:21-37; VICOR-1003, ¶251.

As shown above, "[e]ach of the signal contacts 123, input contact 120-1, and

output contacts 121-1, 121-2, 121-3, and 121-4 may extend from a top surface of the top encapsulant to a bottom surface of the bottom encapsulant as shown." VICOR-1010, 11:29-33. In addition, "contact 122-1 may be used for a common connection for the output (or in a non-isolated example, for the input and output). As shown, the common connection extends laterally along a substantial portion of one side of the module 100 forming contact 122-1 and also extends over much (e.g., 50% or more) of the top and bottom surfaces of the module forming shields 122-2 and 122-3 either or both of which may also be used to establish electrical connections…." VICOR-1010, 6:1-8. A "common connection" is another term of a "ground" terminal. VICOR-1003, ¶252.

The bottom surface of the contacts may form conductive pads for electrically connecting the module to a customer's printed circuit board, as shown in Figure 2. VICOR-1010, 6:62-7:12. The top surface of contact 122-2 may serve as a surface mount pad for other components. VICOR-1010, 13:50-65, Fig. 12.

In one embodiment, Vinciarelli-664 discloses a power converter module which has an input power contact 220, and output power contact 221, two common contacts 222-1 (on opposing sides,) and a conductive shield 222-2 on the top, which is electrically connected to the common contacts 222-1. VICOR-1010, 13:4-11, Fig. 11. In addition, although not labelled, this embodiment includes a "conductive layer" on the bottom of the module, which may be electrically

connected to the top conductive layer by plating through slot 265, which may extend from the top to the bottom of the module. VICOR-1010, 13:16-27, 13:42-45, Fig. 11; VICOR-1003, ¶254.

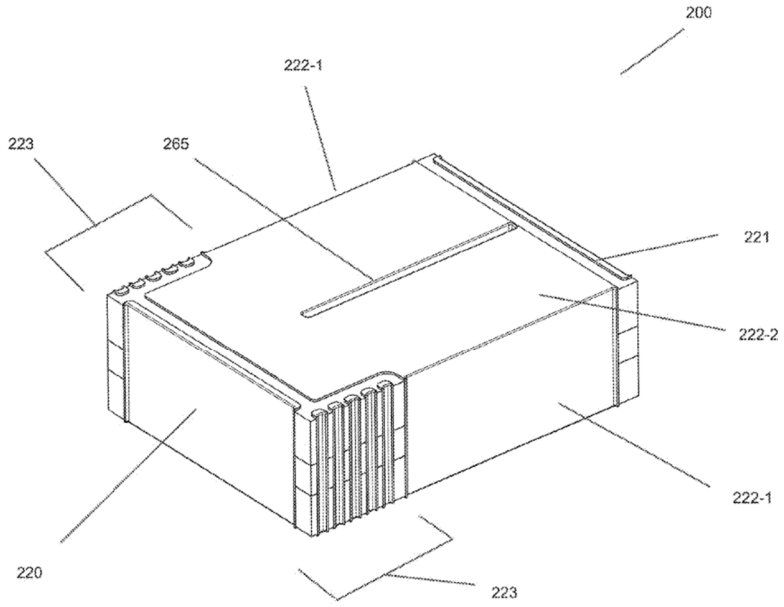

FIG. 11

VICOR-1010, Fig. 11.

Although not specifically labelled in the Figure, a skilled artisan would immediately understand that Figure 11, like Figure 1, discloses a power converter module having a printed circuit board (bearing plate) sandwiched between top and bottom cured layers of encapsulant (insulation material). VICOR-1003, ¶254.

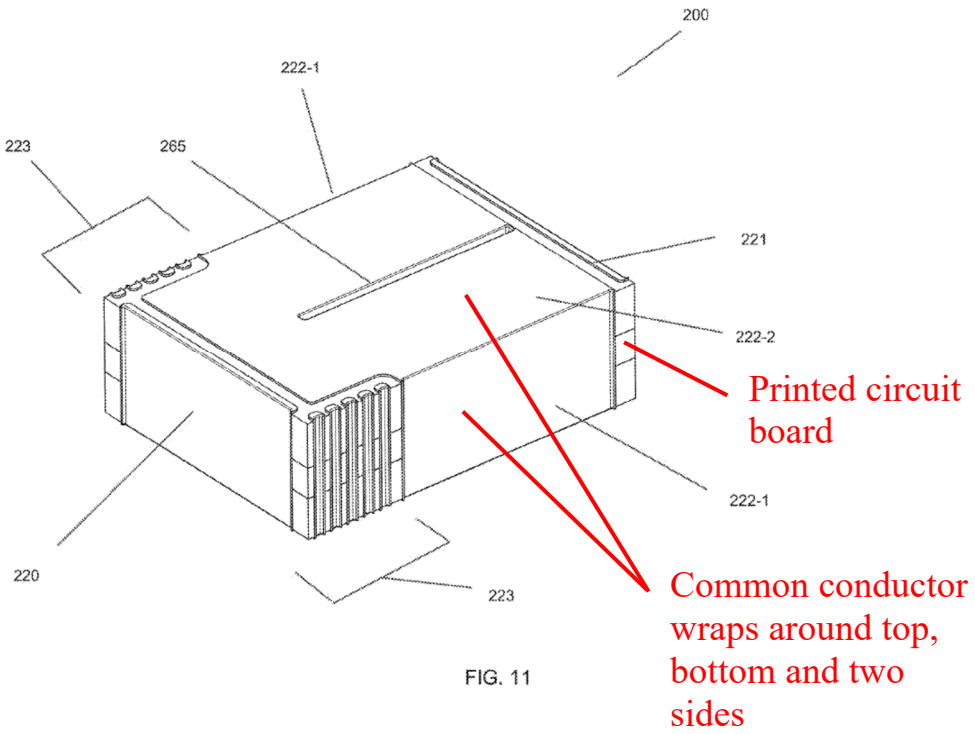

VICOR-1010, Fig. 11.

Thus, Vinciarelli-664 discloses a power converter module in having an electrode (or pin) that is electrically connected with a bearing plate and which covers at least a part of a lower surface, at least part of an upper surface of the insulation material, and at least part of two lateral sides of the bearing plate.

2. Claims 13-19 are not entitled to a priority date prior to April 12, 2018

Claims 13-19 comprise two independent claims, 13 and 17. Claims 14-16 and 18-19 depend from these independent claims. Each of these claims has a limitation "at least one pin electrically connected to the bearing plate and contacting at least part of the insulation material, wherein … the pin covers at least part of a lower surface, at least part of an upper surface [of the insulation material]

and at least part of two lateral sides of the [bearing plate / cuboid body]." Such a feature is not described in the 063 Application that the '534 patent relies upon for priority (and it is only found in the claims of the '534 patent).

The '534 patent issued from an application filed on April 12, 2018. Although the '534 patent purports to be a divisional of and claim priority to the earlier 063 Application, claims 13-19 were not "disclosed in the manner provided by section 112(a)" in the 063 Application, as required by 35 U.S.C. § 120, and thus cannot claim the benefit of the filing date of the earlier application. *See Reiffin v. Microsoft Corp*., 214 F.3d 1342, 1346 (Fed. Cir. 2000) ("In accordance with § 120, claims to subject matter in a later-filed application not supported by an ancestor application in terms of § 112 ¶ 1 … do not receive the benefit of the earlier application's filing date.").

In particular, the 063 Application (which has an identical written description and drawings to the '534 patent) contains no description of a pin that covers both top and bottom and at least portions of **two** lateral sides of either a cuboid body or a bearing plate, as required by claims 13-19. Rather, the only pins that cover portions of exterior surfaces in the disclosed embodiments are described and shown as only covering portions of single lateral side surface, as can be seen in the following Figures. VICOR-1003, ¶¶256-258.

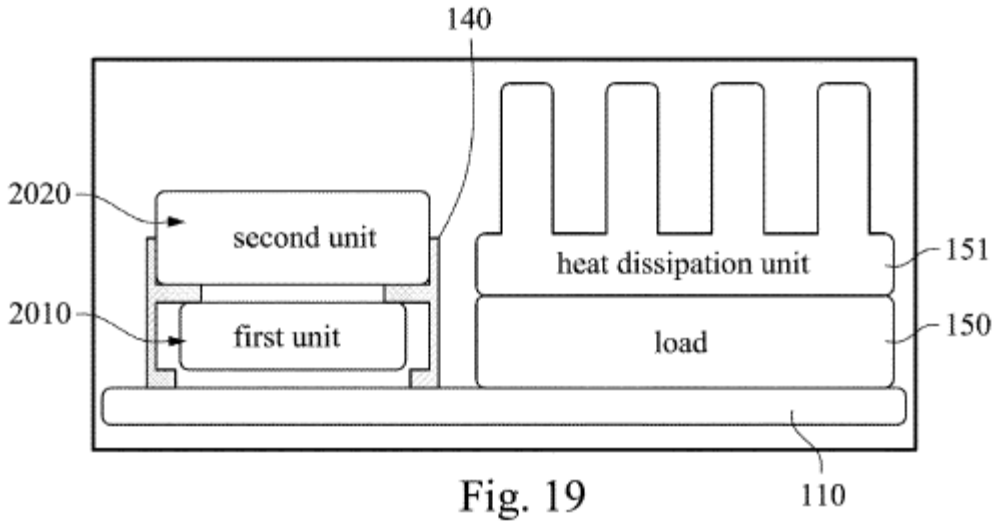
140
2020
second unit
heat dissipation unit
151
2010
first unit
load
150
110

Fig. 19

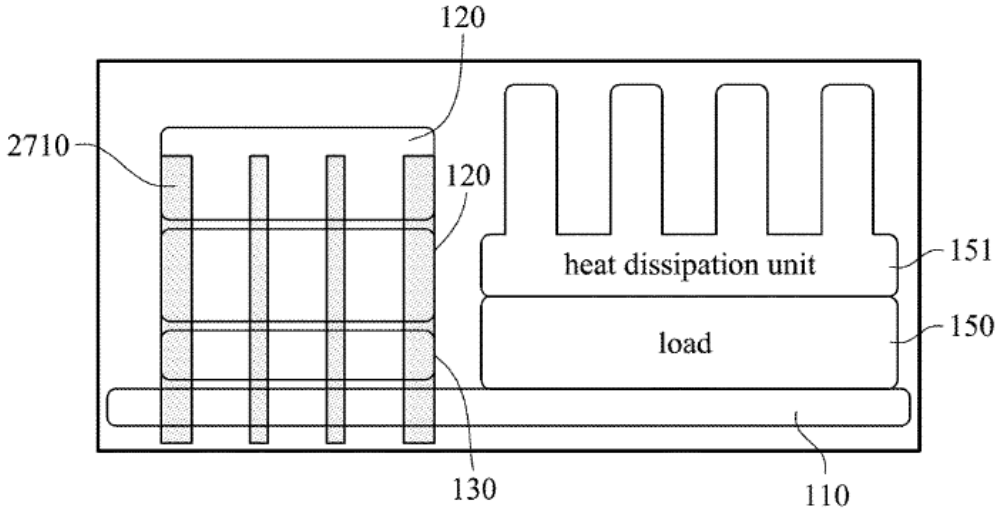
120
2710
120
heat dissipation unit
151
load
150
130
110

Fig. 23

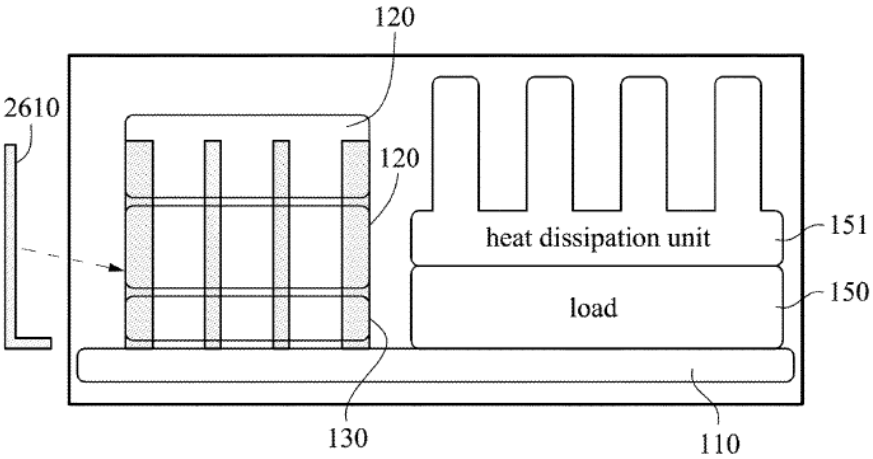

Fig. 24

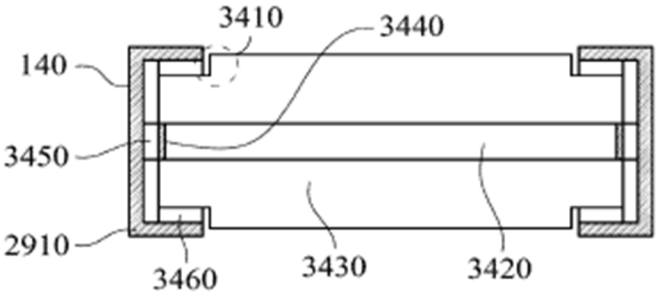

Fig. 25

VICOR-1011 (063 Application and PH), pp. 189-192.

Moreover, none of the original claims the 063 Application included a limitation describing a pin that covered at least part of two lateral sides. VICOR-1011 (063 PH), pp. 176-180.

3. Analysis

[13pre] A power supply apparatus, comprising:

Vinciarelli-664 discloses "encapsulated electronic assemblies including encapsulated power converters." VICOR-1010, 1:7-11. "A singulated leadless

panel-molded power-converter module 200 is shown in FIG. 11 ....” *Id*., 13:4-6.

Module 200 is a power supply apparatus. VICOR-1003, ¶259.

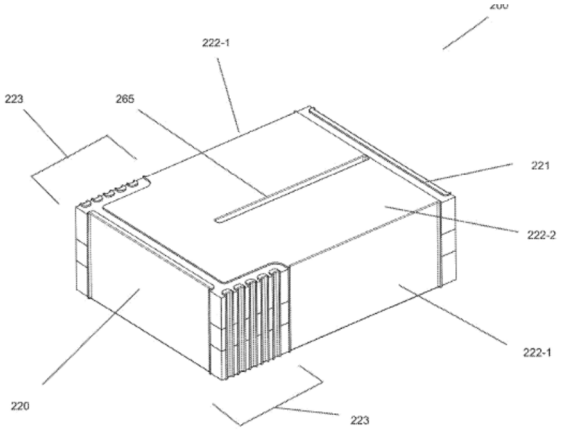

FIG. 11

VICOR-1010, Fig. 11.

[13a] a bearing plate

Vinciarelli-664’s module 200 includes a bearing plate (PCB). VICOR-1003, ¶260. Vinciarelli-664 discloses a bearing plate (printed circuit board 101 in Fig. 1 and unlabeled corresponding element in Fig. 11). VICOR-1003, ¶260; VICOR-1010, 6:15-16, Figs. 1, 11. Both Fig. 1 and Fig. 11 are embodiments of the disclosed “leadless panel-molded power converter module having castellated electrical-connections [and] integral heat-spreading EMI-shields.” VICOR-1010, 5:11-13, 5:37-41. And the embodiments shown in Figs. 1 and 11 are made using the same processes. VICOR-1003, ¶260. Accordingly, a skilled artisan would have understood that, like the middle layer of module 100, the middle layer of module 200 is a PCB. VICOR-1003, ¶260.

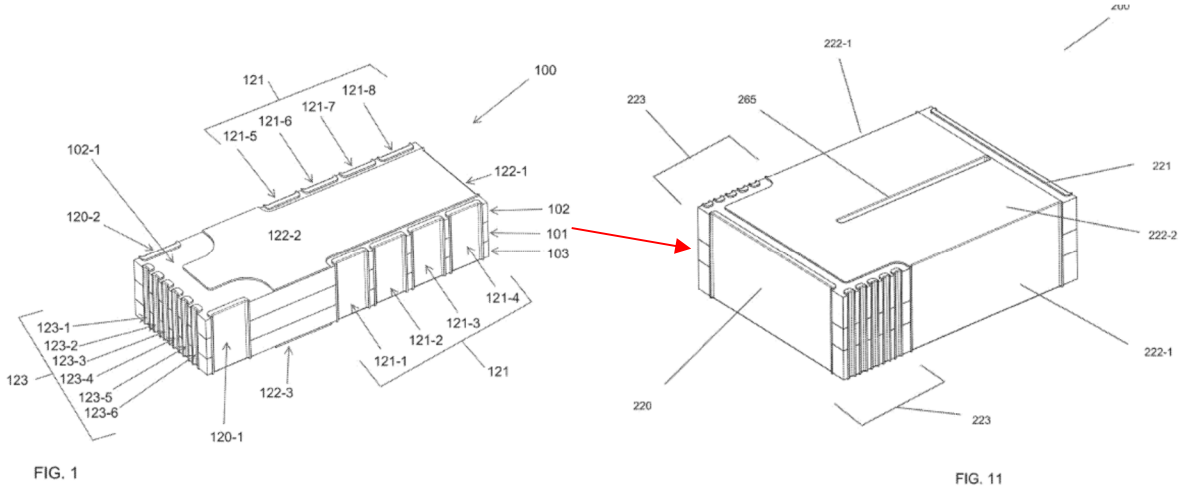

VICOR-1010, Figs. 1, 11.

[13b] insulation material formed on two opposite surfaces of the bearing plate

Vinciarelli-664's module 200 includes insulation material (encapsulant) formed on two opposite surfaces (the top and bottom) of the bearing plate. VICOR-1003, ¶261. Vinciarelli-664 discloses insulation material (encapsulant 102 and 103 in Fig. 1, and unlabeled in Fig. 11) formed on two opposite surfaces of the bearing plate. VICOR-1003, ¶261; VICOR-1010, 6:15-18, Figs. 1, 11. As explained in Ground 5, Element [13a], Figs. 1 and 11 each show embodiments of the disclosed "leadless panel-molded power converter module" and are made using the same process. VICOR-1010, 5:11-13, 5:37-41. Accordingly, a skilled artisan would have immediately envisaged that, like the top and bottom layers of module 100, the top and bottom layers of module 200 are encapsulant layers. VICOR-1003, ¶261. A skilled artisan also would immediately envisage that the layers of encapsulant are necessarily made of an insulating material to prevent short circuits.

VICOR-1003, ¶261; VICOR-1010, 6:15-18, Figs. 1, 11; *see also* Ground 1, Element [13b].

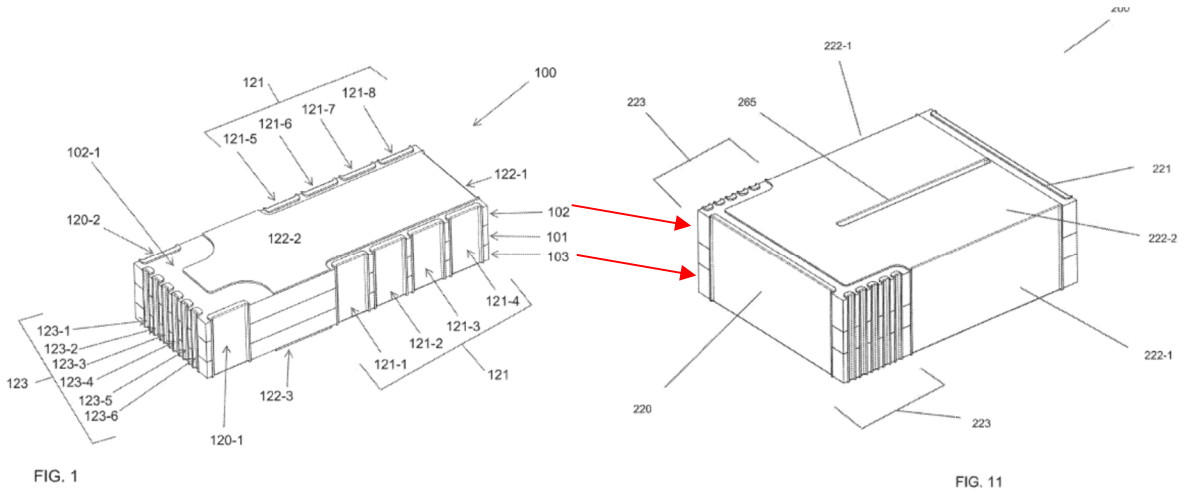

VICOR-1010, Figs. 1, 11.

[13c] at least one pin electrically connected to the bearing plate and contacting at least part of the insulation material, wherein the pin covers at least part of a lower surface, at least part of an upper surface of the insulation material and at least part of two lateral sides of the bearing plate.

Vinciarelli-664's module 200 includes at least one pin (common contacts 222-1 together with conductive shield 222-2 on top of the module, and an unlabeled "bottom conductive layer" that is electrically connected to the conductive shield 222-2 via metalized conduit 265) electrically connected (by metalized conduit 265 and/or contacts on the perimeter edge of the PCB) to the bearing plate and contacting at least part of the top, bottom, and two lateral sides of the insulation material, wherein the pin covers at least part of a lower surface (the surface of the lower encapsulant layer covered by the "bottom conductive layer"),

at least part of an upper surface of the insulation material (the surface of the upper encapsulant layer covered by top shield 222-2) and at least part of two lateral sides (the sides covered by common contacts 222-1) of the bearing plate. VICOR-1003, ¶262; VICOR-1010, 13:1-48, 14:58-59, Fig. 11; *see also* Ground 5, Claim 14 (explaining how the pin is electrically connected to at least one pad on the PCB).

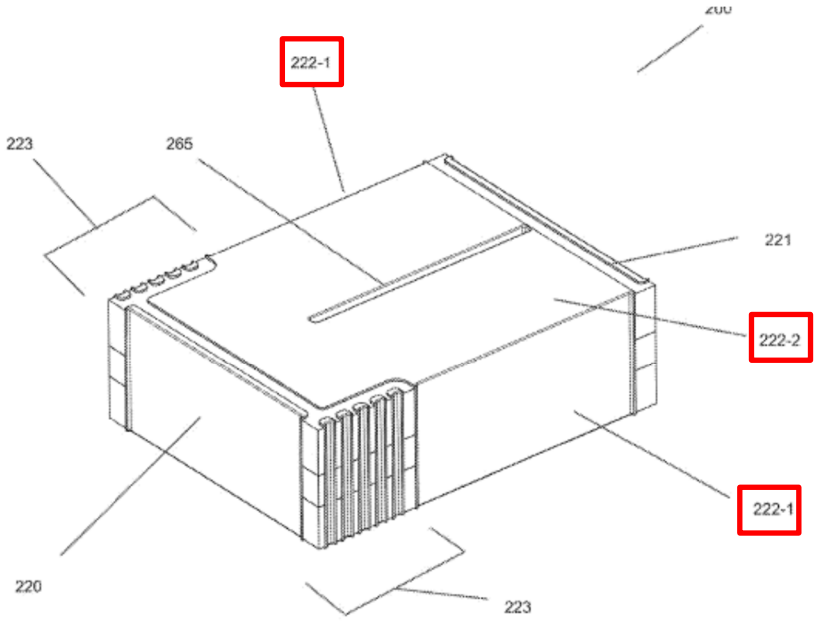

FIG. 11

VICOR-1010, Fig. 11.

14. The power supply apparatus of claim 13, further comprising: at least one first pad disposed on a lateral side of the bearing plate, wherein the pin is electrically connected to the first pad, and the first pad is electrically connected to the bearing plate.

Vinciarelli-664 discloses a first pad (interconnect feature or bar code) disposed on a lateral side of the bearing plate (either side of the PCB covered by common contacts 222-1), wherein at least one of the common contacts 222-1 of the

pin is electrically connected to the first pad, and the first pad is electrically connected to the bearing plate. VICOR-1010, 1:60-2:12, 6:28-61, 7:28-55; 8:27-9:47; VICOR-1003, ¶¶263-265.

As explained in Vinciarelli-664, "[t]he leadless panel mold process described … in connection with FIGS. 5-9 may be readily adapted to form" the singulated leadless panel-molded power-converter module 200 shown in Fig. 11. VICOR-1010, 13:1-11. Specifically, Vinciarelli-664 discloses that, prior to singulation of individual modules in the panel, slotted openings (e.g., 160-163) are formed along the cut lines to create recesses (castellations) "***where the contacts will be formed***." VICOR-1010, 8:47-57, Fig. 6.

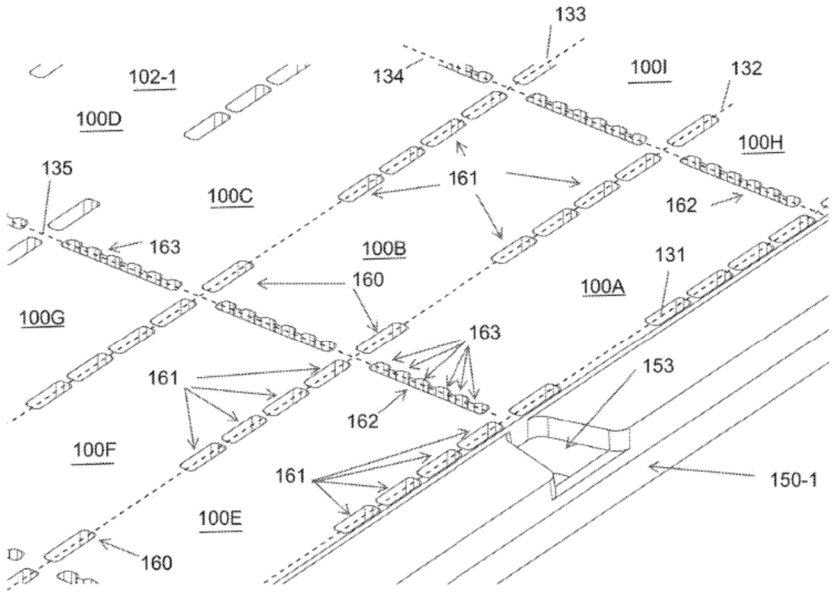

FIG. 6

Id., Fig. 6. The castellations expose "buried interconnect features" "to form electrical connections, i.e., the buried interconnect features [pads] situated along the cut-lines which are exposed when the slots or holes are cut [from] the panel." *Id*., 8:61:64. Then, the panel is plated, using "traditional photoresist techniques" to create a "patterned panel" "with [a] metal layer" "form[ing] … discrete conductive regions" (i.e., pins), within the slots or holes, as well as on top and bottom surfaces of encapsulant. VICOR-1003, ¶263; VICOR-1010, 10:13-11:5, Figs. 8-9.

For example, as seen in Figs. 8-9, the "discrete conductive regions" of module 100, including common contact 122-1, correspond to the slots or holes in which "interconnects or bar codes" were exposed prior to plating, along with conductive shield layers on the top and bottom surfaces electrically connected to the conductive regions formed in specific slots or holes. VICOR-1003, ¶264.

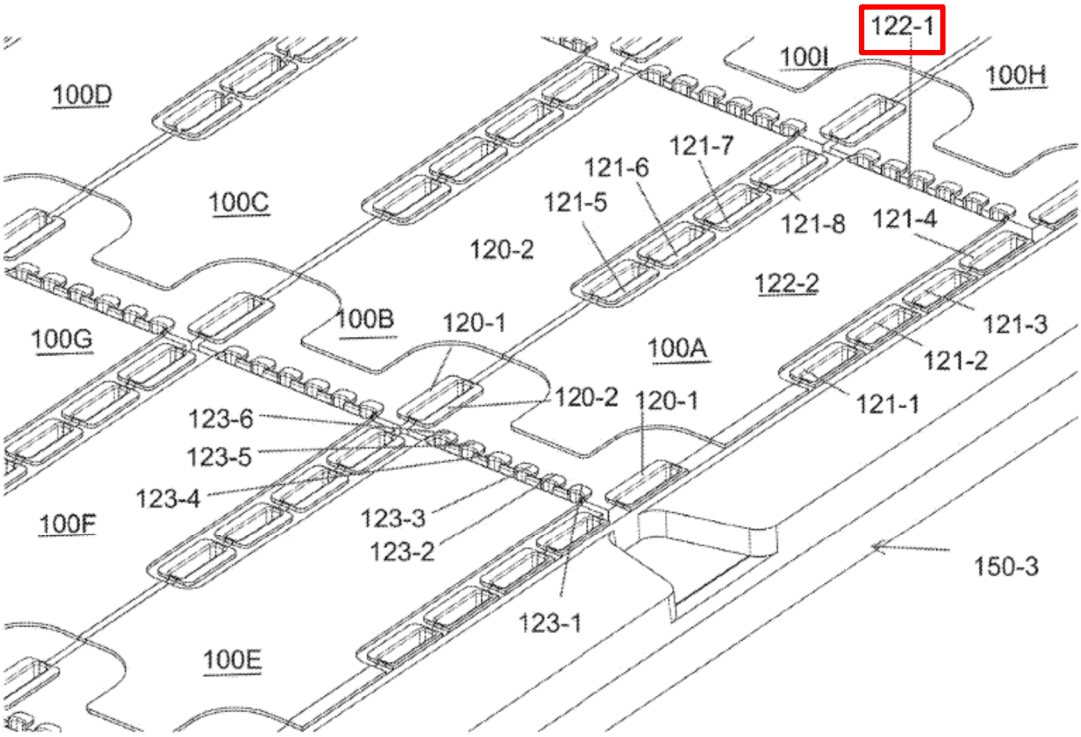
122-1
100I
100H
100D
121-7
121-6
100C
121-5
121-8
121-4
120-2
122-2
100B
120-1
121-3
100G
100A
121-2
120-2
120-1
121-1
123-6
123-5
123-4
123-3
100F
123-2
150-3
123-1
100E

FIG. 8

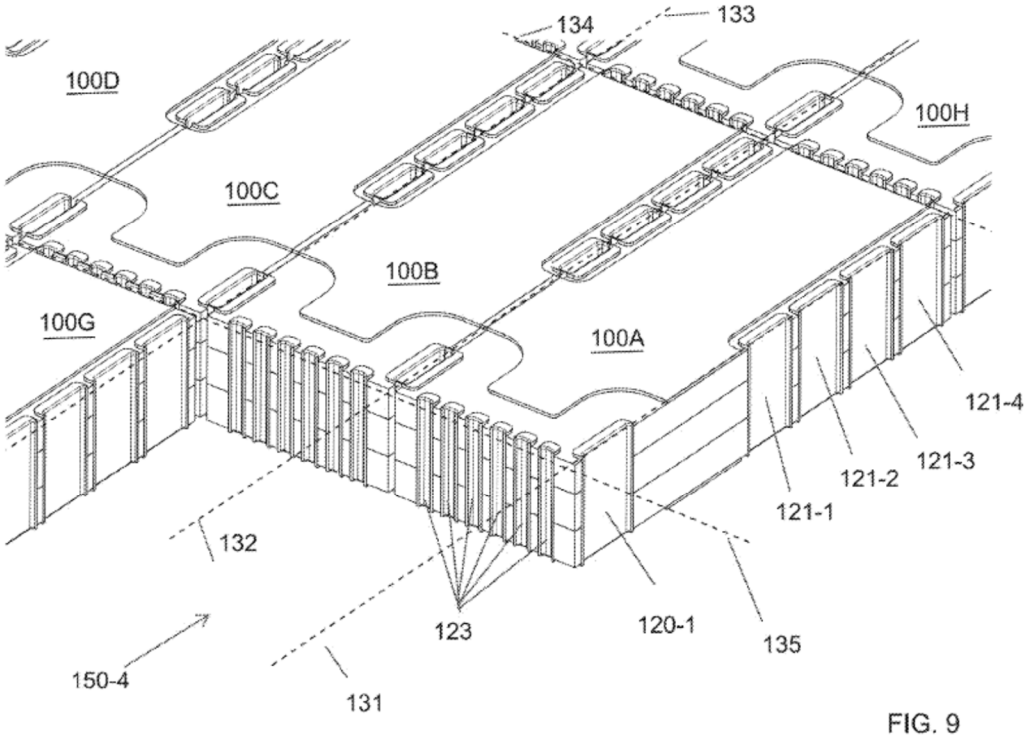
134
133
100D
100H
100C
100B
100G
100A
121-4
121-3
121-2
121-1
132
123
120-1
135
150-4
131

FIG. 9

VICOR-1010, Figs. 8-9.

A skilled artisan would immediately appreciate that, like contact 122-1 of module 100, contacts 222-1 in module 200 form electrical connections with the exposed "interconnects or bar codes" (i.e., pads) on the lateral edges of the PCB that connect to circuits within the PCB. VICOR-1003, ¶265.

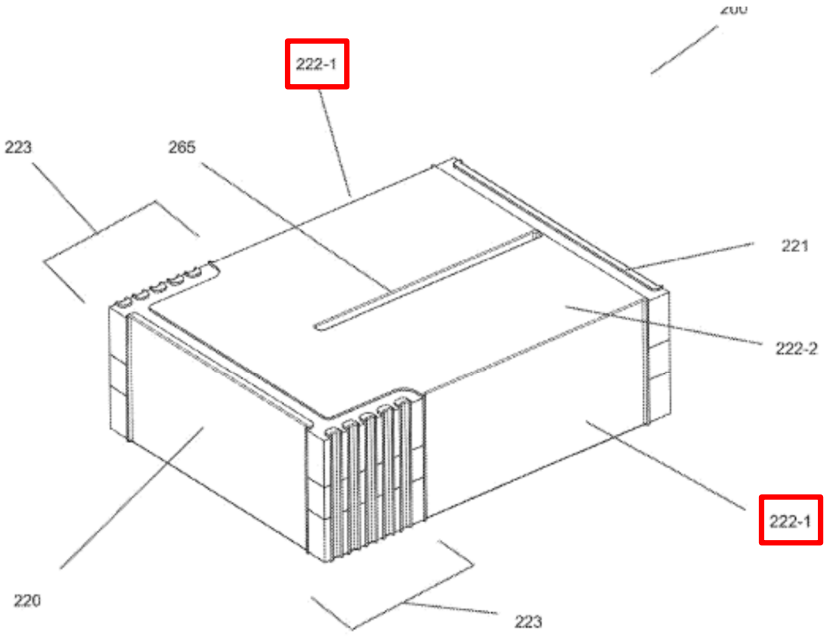

FIG. 11

VICOR-1010, Fig. 11.

15. The power supply apparatus of claim 13, wherein at least one lateral side of the bearing plate is exposed from the insulation material.

Vinciarelli-664 discloses claim 15. VICOR-1003, ¶266. In Vinciarelli-664's module 200, all lateral sides of the bearing plate are exposed from the insulation material. *Id.*; VICOR-1010, Fig. 11.

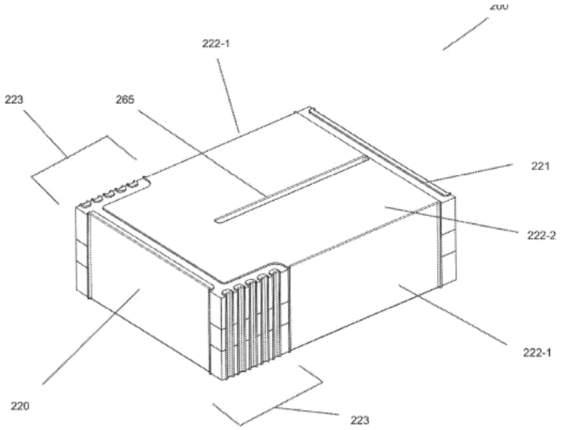

FIG. 11

In the manufacturing technique described in Vinciarelli-664, the molded power converter modules are formed by depositing cured layers of encapsulant on the top and bottom surfaces of a PCB, but not on the lateral edges, which are exposed (and not covered with encapsulant) when the modules are singulated. *See* Ground 5, claim [13b]. VICOR-1003, ¶266; VICOR-1010, Fig. 9, Fig. 11.

16. The power supply apparatus of claim 13, wherein two terminals of the pin have SMD pads located at the upper surface of the insulation material.

In Vinciarelli-664's module 200, two terminals of the pin (the terminals of shield 222-2 on each side of slot 265) have SMD pads located at the upper surface of the insulation material. VICOR-1003, ¶267; VICOR-1010, Fig. 11, 13:1-47. Because upper shield 222-2 is divided by slot 265, each side of the slot constitutes a separate terminal and SMD pad. *Id*.

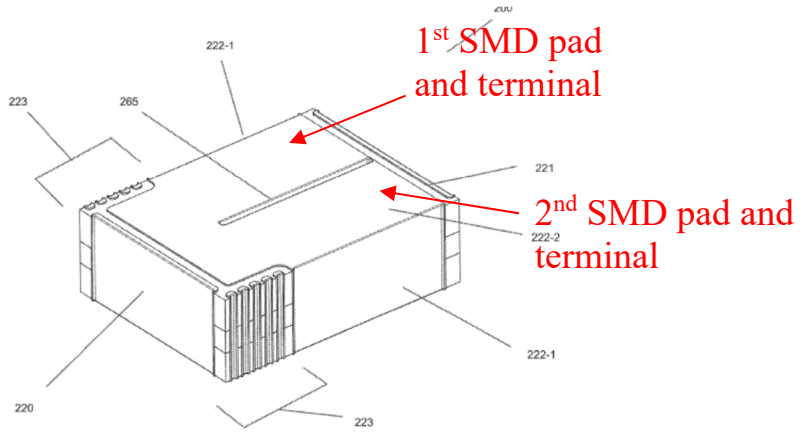

FIG. 11

VICOR-1010, Fig. 11 (annotation added). Vinciarelli-664 teaches that "the metal on one or more surfaces, e.g. preferably the top surface, may be patterned in a manner that would allow one or more components to be mounted onto and electrically connected to the module or to external circuitry via the module." VICOR-1003, ¶267; VICOR-1010, 13:50-65. Accordingly, a skilled artisan would have understood that the respective portions of upper shield 222-2 identified above may be used as pads for surface mounting of other devices, and are thus SMD pads. VICOR-1003, ¶267.

[17pre] A power supply apparatus, comprising:

See Ground 5, Element [13pre].

[17a] a bearing plate

See Ground 5, Element [13a].

[17b] insulation material formed on two opposite surfaces of the bearing plate

See Ground 5, Element [13b].

[17c] at least one pin electrically connected to the bearing plate and contacting at least part of the insulation material, wherein the bearing plate is embedded in the insulation material to form a cuboid body, and the pin covers at least part of a lower surface, at least part of an upper surface and at least part of two lateral sides of the cuboid body.

See Ground 5, Element [13c] (establishing that Vinciarelli-664 discloses at least one pin electrically connected to the bearing plate and contacting at least part of the insulation material, wherein the pin covers at least part of a lower surface, at least part of an upper surface of the insulation material (and thus the cuboid body) and at least part of two lateral sides of the bearing plate (and thus the cuboid body)), Ground 5, claim [13b] (establishing that Vinciarelli-664 discloses that the PCB (bearing plate) is embedded in insulation material). Viciarelli-664 further discloses that the general form of module 200 is a cuboid body. VICOR-1010, Figs. 1, 11; VICOR-1003, ¶¶271-272.

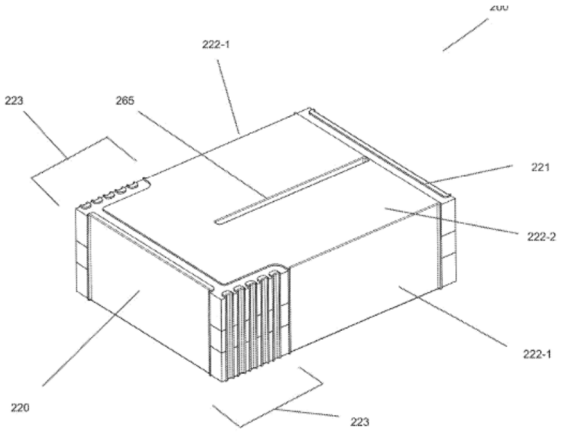

FIG. 11

18. The power supply apparatus of claim 17, wherein two terminals of the pin have SMD pads located at the upper surface of the cuboid body.

See Ground 5, Claim 16. The analysis of claim 16 applies to the cuboid body of parent claim 17. VICOR-1003, ¶273.

19. The power supply apparatus of claim 17, further comprising: at least one first pad disposed on a lateral side of the bearing plate, wherein the pin is electrically connected to the first pad, and the first pad is electrically connected to the bearing plate

See Ground 5, Claim 14. The analysis of claim 14 applies to the cuboid body of parent claim 17. VICOR-1003, ¶273.

F. GROUND 6 – Claims 13-19 are Obvious Over Vinciarelli-664

As shown in Ground 5, Vinciarelli-664 discloses each element of claims 13-19. Each of those claims would also have been obvious over Vinciarelli-664 (in a single reference obviousness analysis) based on general knowledge in the art. VICOR-1003, ¶¶275-280. For example, Vinciarelli-664 expressly discloses that the Figure 1 embodiment comprises a PCB (101) sandwiched between two layers of cured encapsulant (102, 103), which is an insulating material. *See* Ground 5, Element [13b]. To the extent not immediately envisaged or inherent, it would have been obvious to a skilled artisan to make the module depicted in Fig. 11 to have a similar structure of a PCB sandwiched between two layers of encapsulant. VICOR-1003, ¶275. Furthermore, it would have been obvious to a skilled artisan that the cured encapsulant layers should be insulating layers to prevent short circuiting of the various electrical contacts formed thereon. *Id*.

Similarly, to the extent not immediately envisaged or inherent, it would have been obvious to a skilled artisan that the external electrical contacts formed on the exterior of the power conversion modules depicted in Figs. 1 and 11 (121, 122, 123, 221, 222, and 223) would necessarily need to connect to circuity within the encapsulated power converter's PCB (bearing plate) in order to allow some of the power converter's internal components mounted to the PCB to electrically connect with other components on a customer PCB. VICOR-1003, ¶276. It would have been obvious to make those connections by physical contact between the external electrical contacts and the interconnect features exposed on lateral sides of the PCB, thereby having at least one first pad disposed on a lateral side of the bearing plate, wherein the pin is electrically connected to the first pad, and the first pad is electrically connected to the bearing plate. *See* Ground 5, claim 14.

As another example, Vinciarelli-664 expressly discloses that the Figure 1 embodiment comprises a common contact (122-1) that "may be used for a common connection for the output (or in a non-isolated example, for the input and output)" and that is electrically connected to shields 122-2 and 122-3 on the top and bottom surfaces of the module, which may be used to establish electrical connections (and are thus SMD pads). VICOR-1003, ¶277; *see* Ground 5, Element [13c], 14. To the extent not immediately envisaged or inherent it would have been obvious to a skilled artisan to make the module depicted in Fig. 11 also have

electrically conductive shields on the top and bottom of the module electrically connected to the common contacts 222-1, since such shields would serve the same beneficial purposes as in the Figure 1 embodiment. VICOR-1003, ¶277. While the slot 265 in Figure 11 may, optionally, provide electrical connectivity between the top and bottom conductive layers, it would have been obvious for the common contacts 222-1 to connect to both the top and bottom layers, similar to how the common contact 122-1 electrically connects to the shields 122-2 and 122-3 in the embodiment of figures 1-8. *Id.*; VICOR-1010, 10:62-11:5.

As another example, to the extent not immediately envisaged or inherent it would have been obvious to a skilled artisan that the top shield 222-2 in the module depicted in Fig. 11 could be completely divided in two by extending the thermal conduit 265 across the entire width of shield 222-2 (to allow, e.g., improved heat conduction out of the internal portion of the module), thereby creating two physically separated terminals comprising SMD pads as part of the common connection "pin," wrapping around the module, which would also satisfy the limitations "wherein two terminals of the pin have SMD pads located at the upper surface of the insulation material" in claims 16 and 18. Vinciarelli-664 teaches that "any desired shape or size [of] thermal conduit may be provided." VICOR-1003, ¶278; VICOR-1010, 13:45-48. One reason for making this modification would be to increase the thermal carrying capacity of the thermal

conduit. VICOR-1003, ¶278.

To the extent necessary, any such modifications of the disclosure of Vinciarelli-664 would have been well-within the level of ordinary skill in the art. VICOR-1003, ¶¶279-280. Accordingly, a skilled artisan modifying Vinciarelli-664 as described here would have reasonably expected to succeed. *Id*.

IV. DISCRETIONARY DENIAL IS NOT WARRANTED

A. 35 U.S.C. §325(d) – *Advanced Bionics*

Advanced Bionics and the *Becton* factors strongly favor institution. *Advanced Bionics LLC v. MED-EL Elektromedizinische Gerate GmbH*, IPR2019-01469, Paper 6, 2020 WL 740292 (P.T.A.B. Feb. 13, 2020) ("*Advanced Bionics*") (precedential); *Becton, Dickinson and Co. v. B. Braun Melsungen AG*, IPR2017-01586, Paper 8, 2017 WL 6405100 (P.T.A.B. Dec. 15 2017) ("*Becton*") (precedential).

Patent Owner did not cite any of the art presented in this Petition and the Examiner did not consider any of the grounds presented here. Accordingly, neither condition of the first prong of the *Advanced Bionics* framework is met, and there is no need to reach the second prong to resolve against discretionary denial under Section 325(d). *See*, *e.g.*, *Oticon Medical AB et. al. v. Cochlear Ltd.*, IPR2019-00975, Paper 15 at 20, 2019 WL 5237817, at *8 (P.T.A.B. Oct. 16, 2019) (precedential) ("There is new, noncumulative prior art asserted in the Petition…[f]or at least this reason, we determine not to exercise our discretion under § 325(d)").

B. 35 U.S.C. §314(a) – *Fintiv*

The grounds presented in this Petition strongly favor institution, even under the *Fintiv* framework, as clarified by the interim guidance to the PTAB from Director Vidal, dated June 21, 2022.

Factor 1 (Stay)—Neither party has requested a stay, but Petitioner intends to seek a stay, and thus this factor tends to weigh against discretionary denial.

Factor 2 (Trial Date)—A First Amended Complaint adding the '534 patent to the co-pending litigation (the "Litigation") was filed on January 26, 2024 (VICOR-1004), and no trial date has been set. The median time to trial in the District of Delaware is about 3 years. *See* Table C.5 (Period ending March 31, 2023), https://www.uscourts.gov/file/72522/download. This proceeding is expected to be resolved in 18 months, and thus this factor weighs against discretionary denial.

Factor 3 (Investment)—The bulk of the investment in the Litigation has yet to occur. Petitioner has not yet answered, and no part of claim construction has begun. By the time of institution in this proceeding, the Litigation will be at a posture where "much of the district court's investment relates to ancillary matters untethered to the validity issue itself." *Sand Revolution*, IPR2019-01393, Paper 24 at 10-11, 2020 WL 3273334, at *4 (P.T.A.B. June 16, 2020).

Factor 4 (Overlap)—The factual overlap between this proceeding and the

Litigation should be minimal. Petitioner stipulates that, should institution be granted, it will not raise in the Litigation the same grounds presented in this proceeding. *See Sand Revolution*, Paper 24 at 11-12, 2020 WL 3273334, at *5. Factor 4 thus weighs against discretionary denial.

Factor 6 (Merits and Other Circumstances)—The compelling merits presented in this Petition alone justifies institution in the public interest and outweighs any alleged inefficiencies due to the parallel litigation. Petitioner is presenting this petition within 2 months of the filing of the First Amended Complaint in the Litigation, and has diligently developed the grounds presented against the Challenged Claims.

V. CONCLUSION AND FEES

The Challenged Claims are unpatentable. Petitioner authorizes charge of fees to Deposit Account 06-1050.

VI. MANDATORY NOTICES UNDER 37 C.F.R § 42.8(a)(1)

A. Real Party-In-Interest Under 37 C.F.R. § 42.8(b)(1)

Vicor Corporation is the real party-in-interest.

B. Related Matters Under 37 C.F.R. § 42.8(b)(2)

The ’534 patent is the subject of a civil action, *Delta Electronics, Inc. v. Vicor Corporation* 1-23-cv-01246, D. Del., filed November 1, 2023 (VICOR-1004) and amended on January 26, 2024 (VICOR-1005).

Petitioner is also filing today another IPR petition against the ’534 Patent

(challenging a different set of claims). *See* IPR2024-00706. Petitioner is not aware of any other disclaimers, reexamination certificates, or IPR petitions addressing the ’534 patent.

In addition, Petitioner is filing today two more IPR petitions against Patent Owner’s patents. The petition in IPR2024-00704 challenges claims in U.S. Patent No. 8,711,580. The ’580 patent is being asserted in the same Delaware civil action as the ’534 patent. The petition in IPR2024-00705 challenges claims in U.S. Patent No. 9,819,263. Patent Owner is asserting the ’263 patent in *Delta Electronics, Inc. v. Vicor Corporation* 6-23-cv-00726, W.D. Tex., filed October 23, 2023. The inventor of the ’534 patent is also the lead inventor on the ’263 patent, and the patents have overlapping subject matter.

Patent Owner is also prosecuting U.S. Pat. App. No. 17/733,364, which claims the benefit of U.S. Pat. App. No. 15/952,224.

C. Lead And Back-Up Counsel Under 37 C.F.R. § 42.8(b)(3)

Petitioner provides the following designation of counsel.

Lead Counsel	Backup counsel
Steven Katz, Reg. No. 43,706 Fish & Richardson P.C. 60 South Sixth Street, Suite 3200 Minneapolis, MN 55402 Tel: 202-783-5070 Fax: 877-769-7945 Email:IPR25808-0013IP2@fr.com	Lawrence Kolodney, Reg. No. 43,807 Ryan O'Connor, Reg. No. 60,254 60 South Sixth Street, Suite 3200 Minneapolis, MN 55402 Tel: 202-783-5070 Fax: 877-769-7945 PTABInbound@fr.com

D. Service Information

Please address all correspondence and service to the address listed above. Petitioner consents to electronic service by email at IPR25808-0013IP2@fr.com (referencing No. 25808-0013IP2 and cc'ing PTABInbound@fr.com, katz@fr.com, kolodney@fr.com and oconnor@fr.com).

Respectfully submitted,

Dated 3/25/2024

/Steven Katz/

Steven Katz, Reg. No. 43,706
Lawrence Kolodney, Reg. No. 43,807
Ryan O'Connor, Reg. No. 60,254
Fish & Richardson P.C.
60 South Sixth Street, Suite 3200
Minneapolis, MN 55402
T: 202-783-5070
F: 877-769-7945

(Control No. IPR2024-00715)

Attorneys for Petitioner

CERTIFICATION UNDER 37 CFR § 42.24

Under the provisions of 37 CFR § 42.24(d), the undersigned hereby certifies that the word count for the foregoing Petition for *Inter Partes* Review totals 11,822 words, which is less than the 14,000 allowed under 37 CFR § 42.24.

Dated 3/25/2024

/Steven Katz/

Steven Katz, Reg. No. 43,706
Lawrence Kolodney, Reg. No. 43,807
Ryan O'Connor, Reg. No. 60,254
Fish & Richardson P.C.
60 South Sixth Street, Suite 3200
Minneapolis, MN 55402
T: 202-783-5070
F: 877-769-7945

Attorneys for Petitioner

CERTIFICATE OF SERVICE

Pursuant to 37 CFR §§ 42.6(e)(4)(i) *et seq.* and 42.105(b), the undersigned certifies that on March 25, 2024, a complete and entire copy of this Petition for *Inter Partes* Review and all supporting exhibits were provided by Federal Express, to the Patent Owner, by serving the correspondence address of record as follows:

James Lynn O'Sullivan
12345 Lake City Way NE, No. 283
Seattle, WA 98125

/Diana Bradley/

Diana Bradley
Fish & Richardson P.C.
60 South Sixth Street, Suite 3200
Minneapolis, MN 55402
(858) 678-5667