UNITED STATES PATENT AND TRADEMARK OFFICE

BEFORE THE PATENT TRIAL AND APPEAL BOARD

VICOR CORPORATION,
Petitioner,

v.

DELTA ELECTRONICS, INC.,
Patent Owner.

IPR2024-00715
Patent 10,877,534 B2

PETITIONER'S REQUEST FOR DIRECTOR REVIEW

Table of Contents

I. INTRODUCTION 1

II. PROCEDURAL BACKGROUND 2

III. FACTUAL BACKGROUND 4

A. The Vinciarelli-218 Prior Art Reference 4

B. The Zeng-014 Prior Art Reference 7

C. The Combination of Vinciarelli-218 and Zeng-014 9

D. The Board's Decisions 10

IV. ARGUMENT 12

V. CONCLUSION 15

I. INTRODUCTION

Vicor requests Director Review so that the Director can resolve an important open policy question concerning 37 C.F.R. § 42.108(c) that has caused inconsistent board decisions. The Director can provide much needed guidance to the Board to achieve both fairness and consistency across Board proceedings.

Prior to December 2020, the Board had a bright line rule resolving genuine fact disputes in Petitioner's favor at the institution stage pursuant to 37 C.F.R. § 42.108(c). The rule at that time stated that "[t]he Board's decision will take into account a patent owner preliminary response where such a response is filed, including any testimonial evidence, but a genuine issue of material fact created by such testimonial evidence will be viewed in the light most favorable to the petitioner solely for purposes of deciding whether to institute an inter partes review." In December 2020, however, the rule was revised to strike the clause concerning the presumption. Thus, under the current rule, "the Board will consider all evidence to determine whether the petitioner has met the applicable standard for institution of the proceeding." 85 Fed. Reg. 79120 (December 9, 2020).

The policy question presented is whether the Board should be resolving a fact dispute—one way or the other—at the institution stage based solely on Patent Owner's testimonial evidence that (1) raises a new issue (*e.g.*, does not merely identify alleged deficiencies in the Petition) and (2) is unsupported by any

objective documentary evidence, or as the case here, is contrary to the documentary evidence of record.

Vicor submits that where there is a "battle of the experts" at the institution stage, the Board should not be "crediting" testimonial evidence of one expert over another where that testimonial evidence raises a new issue, is not supported by objective documentary evidence, and is, in fact, contradicted by the prior art of record. Rather, the Board should institute review and resolve the fact dispute on a more fulsome record.

II. PROCEDURAL BACKGROUND

Vicor filed two IPR petitions against U.S. Patent No. 10,877,534. The first petition, in IPR2024-00706, challenged claims 1-8 and 10-12. The second petition, in IPR2024-00715, challenged claims 13-19.

In both proceedings, Vicor asserted as one of its grounds that the claims would have been obvious based on a combination of Vinciarelli-218 and Zeng-014. Vicor asserted that a skilled artisan would have been motivated to make the combination to allow the Vinciarelli-218 power converters to be stacked in order to save board space. The stacking of components was specifically taught in Zeng-014.

The Board denied institution in both proceedings, finding a lack of a motivation to combine. On the stacking point, the Board credited the testimony of

Patent Owner's expert, who asserted that "heat dissipation" issues would have dissuaded a skilled artisan from stacking the power converters of Vinciarelli-218. IPR2024-00706, Paper 13 (Institution Decision) at 22-23; IPR2024-00715, Paper 13 (Institution Decision) at 22-23.

The allegedly fatal "heat dissipation" issue is not discussed in Vinciarelli-218 or Zeng-014. Nor was it corroborated by any objective documentary evidence. Tellingly, the challenged patent disclosed stacked power converters without providing a "solution" for any alleged "heat dissipation" problem. Nonetheless, the Board concluded that, due to the alleged "heat dissipation" issue, Vinciarelli-218 power converters "require" heat sinks and heat sinks were allegedly incompatible with stacking. Neither finding was supported by any objective documentary evidence and both findings are contrary to the teachings of Vinciarelli-218.

At the pre-institution stage, Petitioner did not have an opportunity to take the deposition of Patent Owner's expert and could not provide rebuttal testimonial evidence from its own expert.[1]

---

[1] The opportunity to file a Reply (which Petitioner did on certain issues) is no substitute for rebuttal testimonial evidence. Moreover, Petitioner reasonably believed its expert had already provided adequate testimony to meet its burden and

Because the Board denied institution based on fact finding that (1) credited the testimony of Patent Owner's expert in the absence of any objective documentary evidence in support, and further (2) was contrary to express teachings in the prior art on which the Petitions relied, Vicor seeks Director Review. The Board's decision demonstrates an abuse of discretion.

Further, as a matter of policy, where a Petitioner has provided an adequate motivation (such as the stacking motivation here) based on teachings of the prior art, the Board should not "credit" Patent Owner's Expert's untested testimony raising a new issue that, in fairness, should be subject to rebuttal testimony and cross examination. Rather, in such circumstances, the Board should institute trial and postpone fact finding until after a more fulsome record is developed.

Vicor is filing the identical request for Director Review in the two IPR proceedings involving the '534 Patent (IPR2024-00706 and IPR2024-00715).

III. FACTUAL BACKGROUND

A. The Vinciarelli-218 Prior Art Reference

Vinciarelli-218 discloses a power converter that has a box-like appearance. Some, but not all, embodiments have heat sinks to help remove heat from heat

---

could not predict that the Board would credit the new "heat dissipation" issue which was contrary to the teachings of the prior art of record.

generating components in the power converter. For example, Figure 16 illustrates a power converter with heat sinks on the top and bottom:

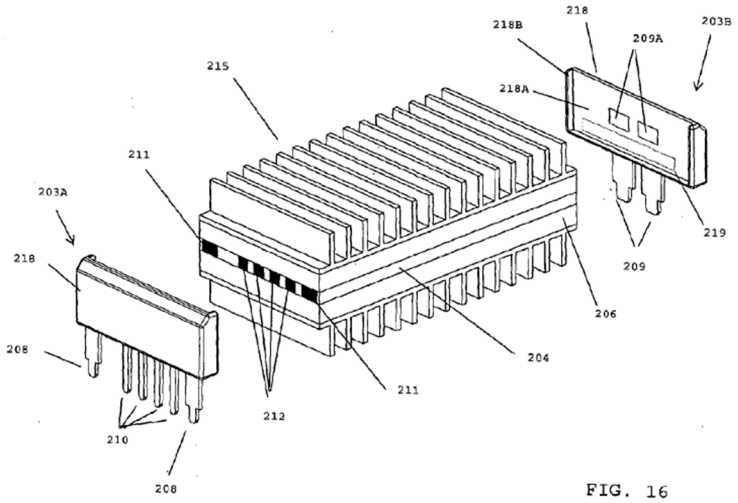

FIG. 16

Ex. 1006 (Vinciarelli-218), FIG. 16. In another example, Figure 18 discloses a pair of flat heat sinks—one of the top and one on the bottom of the device.

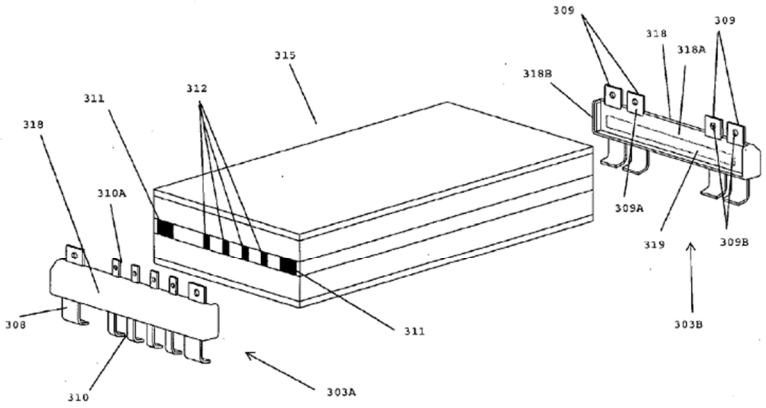

FIG. 18

Ex. 1006, FIG. 18.

Heat sinks have two purposes in some of these embodiments. First, as the name suggests, they help remove heat from the thermally conductive encapsulant. *Id.*, [0083]. Second, heat sinks may form parts of the mold during the manufacturing process. *Id.*, [0087]. The modules have a printed circuit board, which is surrounded by an injected encapsulant. During manufacturing, the printed circuit board is placed in a mold and an electrically insulating, but thermally conductive encapsulant is injected into the mold to form the power converter module. Vinciarelli-218 explains that heat sinks can form the top and bottom of the mold and thus hold in the encapsulant during molding: "the heat sink panels 121 and 122 also function as mold panels by forming a mold cavity (e.g., the internal cavity 146) that may be filled at least in part by an encapsulant." Ex. 1006, [00087] (identifiers 121 and 122 are used in FIGs. 1-4 to identify finned heat sinks).

Fundamental to the Petitions, Vinciarelli-218 discloses that heat sinks are **optional**. Vinciarelli-218 discloses a "heat sinkless" embodiment that does not need heat sinks. Ex. 1006, [0158-0168]. Vinciarelli-218 includes a section entitled "Components without Heatsinks" and states: "In some applications it may be desirable to use the panel-molding process to produce components, such as power converters, **without** the flat heat sink surfaces, finned heat sinks, or pinned heat

sink features described in the above embodiments." Ex. 1006, [0159] (citations omitted).

Vinciarelli-218 discloses module 815 that has no heat sinks. Ex. 1006, [0159], [0160], FIG. 33:

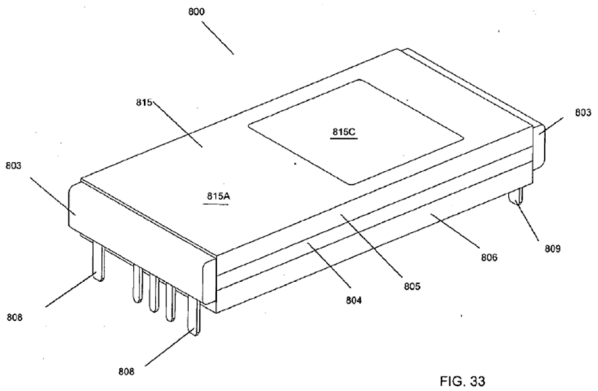

Vinciarelli-218 explains that "[l]ike the singulated modules with heat sinks, various types of connectors or adapters may be coupled to the exposed interconnects 811, 812 at the edges of the singulated module 815 [the version without heat sinks]." Ex. 1006, [0160], see also [0162] (referring to 815 as a "heat-sinkless module").

B. The Zeng-014 Prior Art Reference

Zeng-014 discloses a cuboid electronic component that uses "connecting" and "pin" conductors on its exterior surface to provide electrical connections for external components. Zeng-014 expressly teaches conductors on the top and

bottom of the device to provide for the **stacking** of components. For example, Zeng-014 teaches an "inductive component" that "comprises a connecting conductor adapted to wrap a first surface of the inductive component" and a "first electronic component stacks on and is electrically connected to the inductive component." Ex. 1007, [0013]. FIG. 6C illustrates "inductive component 62" with conductors on the top and bottom being used for stacking:

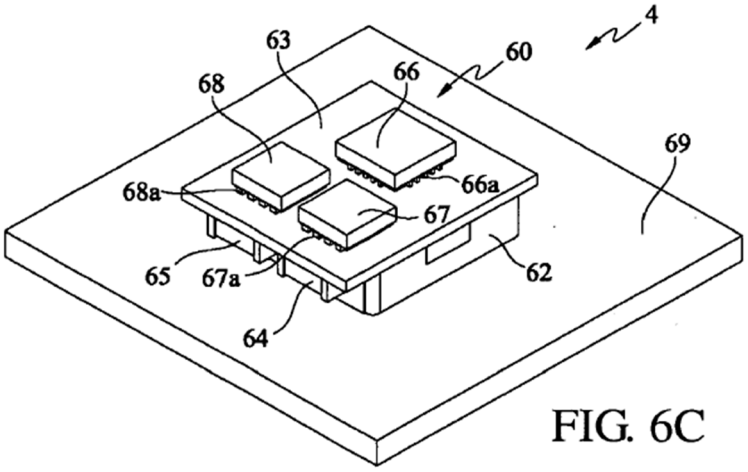

FIG. 6C

Figures 11A and 12A illustrate additional embodiments with top and bottom conductors to allow for stacking components on top of the inductor:

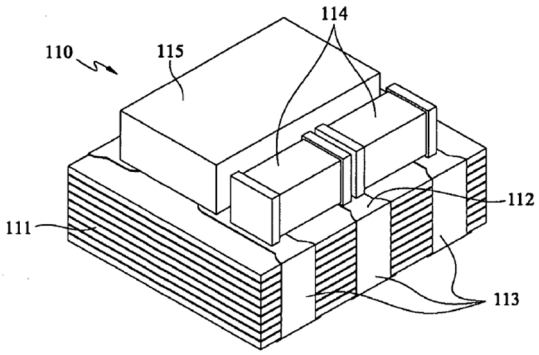

FIG. 11A

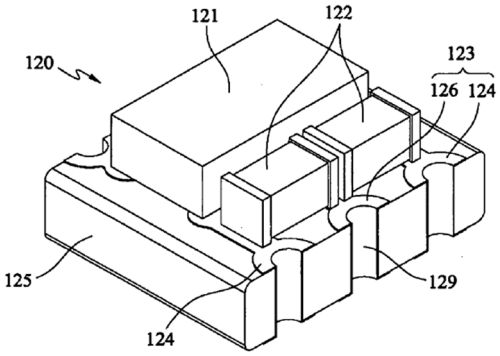

FIG. 12A

Ex. 1007, FIGs. 6C, 11A, 12A.

C. The Combination of Vinciarelli-218 and Zeng-014

Ground 1 in each of the Petitions in IPR2024-00706 and IPR2024-00715 relied on the combination of Vinciarelli-218 in view of Zeng-014. In the proposed combination, a skilled artisan would start with the power converter of Vinciarelli-218 and replace the adapters disclosed in that reference with the conductors shown in Zeng-014:

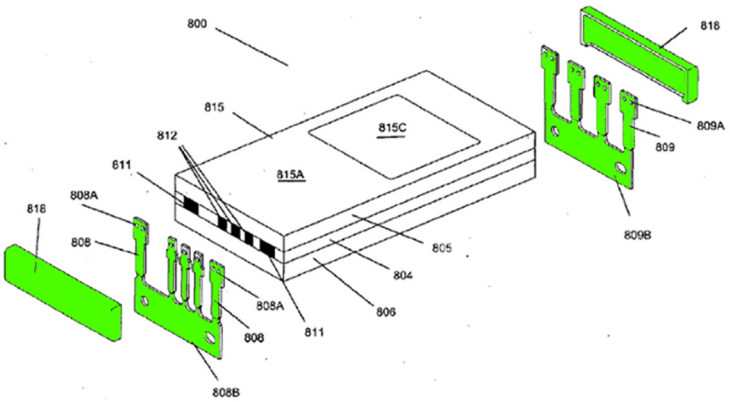

FIG. 35

To illustrate the point (and not to depict a physical combination), the green portions of Vinciarelli-218, Figure 35 would be replaced with one or more of the green portions from Zeng-014, Figure 4D, below based on the teaching in Zeng-014 that adding conductors on the top and bottom of an electronic component is useful to allow for stacking:

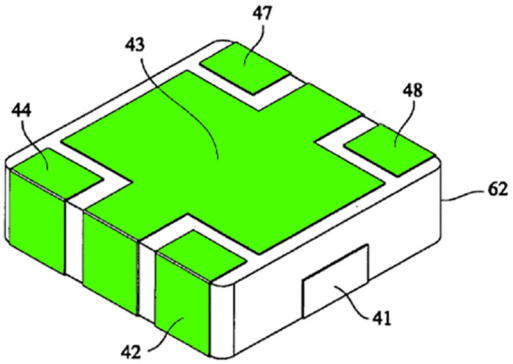

FIG. 4D

See, generally, IPR2024-00706, Paper 3, 5-35; IPR2024-00715, Paper 3, pp. 5-28.

D. The Board's Decisions

On the stacking issue, the Board's decision in each of the proceedings is essentially the same. The Board noted that there "has to be evidence of 'glue' to make this specific combination, and not just use the claim as a roadmap for making the combination of the prior art." IPR2024-00706, Paper 13 at 20, IPR2024-00715, Paper 13 at 20.

The Board first dismissed various motivations discussed in the Petitions, concluding that "there is no reason provided as to why a person of skill would specifically be led to the specific pins of Zeng-014, **absent the alleged motivation to stack** electronic components in Vinciarelli-218, which we discuss further below." IPR2024-00706, Paper 13 at 22 (emphasis added); *see also* IPR2024-00706, Paper 13 at 22 (similar).

With regard to the stacking motivation, the Board acknowledged that Petitioner's expert testified that one would be motivated to stack power converters to save board space, and that, in the combination, the stacked power converters would use "flush mounting of Vinciarelli-218's electronic devices to achieve electrical connection" between the stacked devices. *Id.*

However, the Board rejected this stacking motivation, finding that stacks of the Vinciarelli-218 power converters are "**not suitable** **because of heat dissipation issues.**" IPR2024-00706, Paper 13 at 23 (emphasis added); see also IPR2024-00706, Paper 13 at 22 (same). The Board based this factual finding exclusively on the testimony of Patent Owner's expert, who allegedly "refers [to] Vinciarelli-218's restrictions where the singulated encapsulated modules **require** heat sink panels, such as flat heat sink surfaces, finned heat sinks, or pinned heat sinks on their surfaces for heat dissipation." IPR2024-00706, Paper 13 at 23 (emphasis added); see also IPR2024-00706, Paper 13 at 22-23 (same).

Other than Patent Owner's expert's bald assertion, there is **no objective evidence** of record suggesting that the power converters in Vinciarelli-218 cannot be stacked, and the basis for the Board's decision—that the power converters **require** heat sinks—ignores—**and is contrary to**—the very embodiment on which Vicor relies.

IV. ARGUMENT

The current rule governing institution requires the Board to "take into account a patent owner preliminary response where such a response is filed, including any testimonial evidence." The rule does not explain **how** a panel is to "take into account" testimonial evidence (1) on a new issue without an opportunity for rebuttal evidence and (2) that lacks support in objective documentary evidence, and worse, is contrary to the express teachings of the prior art of record.

Some panels view such testimonial evidence in the context offered, recognizing that when such testimonial evidence lacks supporting objective documentary evidence, a disputed fact issue is raised that requires institution and a more fulsome record before fact finding. *See, e.g.*, *Xilinx, Inc. v. Analog Devices, Inc.*, IPR2020-01219, paper 9 (January 24, 2021) at 15-16 (deferring resolution of a battle of the experts until trial). Indeed, in another IPR proceeding between the same parties **and involving the same combination of references**, this same panel prudently put off fact finding at institution when faced with a classic "battle of the experts." When instituting IPR2024-00705, the panel stated:

> Patent Owner's expert, Dr. Phinney, provides testimony that stacked modules "increases size, not decreases it." Ex. 2001 ¶¶ 174–175, Accordingly, the parties' evidence presents a classic battle of the experts, which we determine would be best addressed during a trial. The parties are invited to address this issue during trial, wherein, **during the course of the trial, Petitioner will have the opportunity**

> **to cross-examine Dr. Phinney, and the parties will have the opportunity to provide and cross-examine further expert witnesses**.

Paper 11, p. 26 (emphasis added). Similarly, the panel should not have made fact finding on the bald testimony of Patent Owner's expert here at the institution stage.[2]

In this proceeding, the Board relied on the testimony of Patent Owner's expert that the prior art Vinciarelli-218 power converters "require" heat sinks and therefore the disclosed power converters were allegedly "unsuitable" for stacking. IPR2024-00706, Paper 13 at 23; IPR2024-00706, Paper 13 at 22-23. The Board relied on the statement from Patent Owner's expert—which is **contrary** to the express teachings of Vinciarelli-218—that "Vinciarelli-218's modules are restricted by" heat dissipation factors and "directed to singulated module having heatsinks on its top and bottom." Ex. 2001, ¶59. In fact, Vinciarelli-218 has embodiments (that the Petitions rely on) without any heatsinks whatsoever. Ex. 1006, [0158]-[0168].

---

[2] This is particularly true where the expert misrepresents the prior art. Compare paragraph 60 of Ex. 2001 (suggesting paragraph 159 of Vinciarelli-218 suggests using non-flat heat sinks such as "pinned" heat sinks) with the actual quote in paragraph 159 of Vinciarelli-218 which teaches power converters that have no heat sinks at all.

Such fact finding at institution constitutes an abuse of discretion given that (1) Vinciarelli-218 states the opposite (and discloses "heat sinkless" embodiments on which the Petition expressly relied),[3] (2) the expert cited **no objective** documentary evidence supporting this alleged "requirement," and (3) Petitioner did not have an opportunity to cross-examine and submit rebuttal testimony and evidence (which occurs after institution).

Moreover, the Board made a legal error by viewing what is at most a

---

[3] The Board's finding that heat sinks were required by Vinciarelli-218 is further shown to be plainly incorrect by Patent Owner's expert's admission a few paragraphs later that Vinciarelli-218 disclosed "heat sinkless" embodiments. Ex. 2001, ¶63. This contradiction should have raised a red flag at the Board.

In an argument **not** addressed by the Board, the expert asserted that the "purpose" of "removing" the heat sinks was to "reduce device height," implying that one would not stack a "heat sinkless" version. This is made up. Paragraph 159 of Vinciarelli-218 is cited, but offers no support. It broadly teaches that embodiments without heat sinks "may be desirable." Ex. 1006, [00159]. Nowhere does Vinciarelli-218 teach away from power converters with increased device height. Nowhere does Vinciarelli-218 state that the "purpose" of the heat sinkless embodiments is to reduce module height.

perceived preference (for heat sinks) as a teaching away. *Galderma Labs., L.P. v. Tolmar, Inc*., 737 F.3d 731, 738 (Fed. Cir. 2013) ("A reference does not teach away ... if it merely expresses a general preference for an alternative invention but does not criticize, discredit, or otherwise discourage investigation into the invention claimed.") (citation omitted).

The Director should use this proceeding as a vehicle to clarify the application of 37 C.F.R. § 42.108(c) and direct the Board to institute review in the circumstances presented here, when the Patent Owner provides testimonial evidence on a new issue that is unsupported by objective documentary evidence, and in fact, contrary to the prior art of record.

V. CONCLUSION

For the foregoing reasons, Petitioner requests Director Review and asks that the Director reverse the Board and institute review.

Respectfully submitted,

Dated: October 31, 2024

/Steven R. Katz/

Steven R. Katz, Reg. No. 43,706
Lawrence Kolodney, Reg. No. 43,807
Ryan O'Connor, Reg. No. 60,254
Fish & Richardson P.C.
60 South Sixth Street, Suite 3200
Minneapolis, MN 55402
T: 202-783-5070
F: 877-769-7945
Attorneys for Petitioner

CERTIFICATE OF SERVICE

Pursuant to 37 CFR §§ 42.6(e)(1) and 42.6(e)(4)(iii), the undersigned certifies that on October 31, 2024, a complete and entire copy of this Petitioner's Request for Director Review was provided by email to the Patent Owner by serving the email correspondence addresses of record as follows:

John P. Schnurer
Miguel Bombach
Yun (Louise) Lu
PERKINS COIE LLP
11452 El Camino Real, Suite 300
San Diego, CA 92130

Email: Delta-Vicor-IPRs@perkinscoie.com

/Anastasia Renard/
Anastasia Renard
Fish & Richardson P.C.
60 South Sixth Street, Suite 3200
Minneapolis, MN 55402
renard@fr.com