Trials@uspto.gov
571-272-7822

Paper 13
Date: November 21, 2024

UNITED STATES PATENT AND TRADEMARK OFFICE

BEFORE THE PATENT TRIAL AND APPEAL BOARD

MEDIATEK, INC.,
Petitioner,

v.

MOSAID TECHNOLOGIES INC.,
Patent Owner.

IPR2024-00721
Patent 9,350,349 B2

Before KEN B. BARRETT, JOHN F. HORVATH, and ELIZABETH M. ROESEL, *Administrative Patent Judges.*

HORVATH, *Administrative Patent Judge*.

DECISION
Denying Petitioner's Request for Rehearing of
Decision Denying Institution of *Inter Partes* Review
37 C.F.R. § 42.71(d)

I. INTRODUCTION

MediaTek, Inc. ("Petitioner") filed a Petition requesting *inter partes* review of claims 1–16 ("the challenged claims") of U.S. Patent No. 9,350,349 B2 (Ex. 1001, "the '349 patent"). Paper 2 ("Pet."), 1. MediaTek's Petition relied on two principal references, Takahashi[1] for Grounds 1A–1C and Mizuno[2] for Grounds 2A–2B. Pet. 2.

We denied institution, finding all challenged claims required "a plurality of power islands," where "each of the power islands includ[ed] circuitries and sleep transistors [plural]," and Petitioner's mapping of Takahashi and Mizuno to the challenged claims disclosed only power islands having a *single* sleep transistor. Paper 11 ("Dec." or "Decision"), 11–12 (Takahashi grounds), 17–18 (Mizuno grounds).

Petitioner requests rehearing of our Decision, arguing we "[o]verlooked or misapprehended the disclosure of plural sleep transistors by Mizuno," "[m]isapprehended the knowledge a POSITA [person of ordinary skill in the art] would have had with regard to prior art sleep transistors," and "gave insufficient weight to Dr. Min's testimony." Paper 12 ("Req. Reh'g), 1.

II. ANALYSIS.

A. Legal Standard

A request for rehearing "must specifically identify all matters the party believes the Board misapprehended or overlooked, and the place where each matter was previously addressed in a motion, an opposition, or a reply." 37 C.F.R. § 42.71(d). The burden of showing a decision should be modified

[1] U.S. Pub. No. 2003/0025130 A1, published Feb. 6, 2003. Ex. 1004.
[2] U.S. Pub. No. 2003/0102904 A1, published June 5, 2003. Ex. 1005.

on a request for rehearing lies with the party challenging the decision. *Id*. A panel rehearing a decision will review it "for an abuse of discretion." *Id*. § 42.71(c). An abuse of discretion occurs when a "decision was based on an erroneous conclusion of law or clearly erroneous factual findings, or . . . a clear error of judgment." *PPG Indus., Inc. v.Celanese Polymer Specialties Co.*, 840 F.2d 1565, 1567 (Fed. Cir. 1988).

B. Petitioner's Mizuno Contentions

Petitioner argues we erred because we ignored Petitioner's contention that Mizuno's power switch PSW1 *and* current source PSW2 are sleep transistors. Req. Reh'g. 2. Petitioner points to a statement made in the Petition that "a POSITA would have understood and found obvious that Mizuno's 'power switch PSW1' and 'current source PSW2' are sleep transistors that reduce leakage in the integrated circuit during standby." *Id.* at 3 (quoting Pet. 62–63). Petitioner contends its modified version of Figure 22 "clearly shows both PSW1 and PSW2 coupled to the respective circuit CKT, as required by the claims." *Id.*

Petitioner's modified version of Figure 22 is reproduced below.

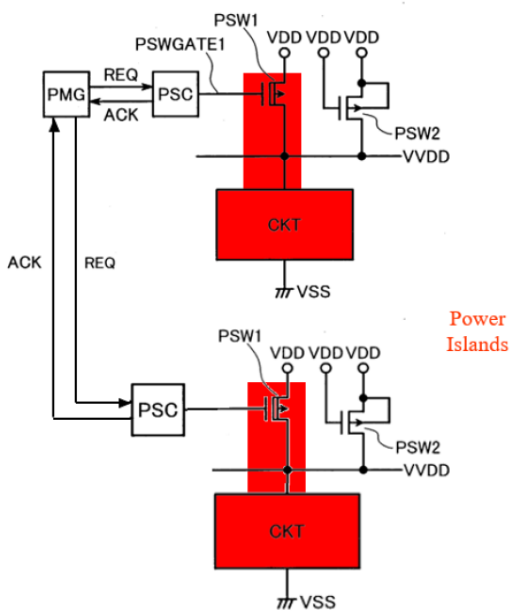

The Figure above is Petitioner's modified version of Mizuno's Figure 22. Pet. 64. Petitioner's modification adds the term "Power Islands" in a red font and highlights transistors PSW1 and circuits CKT in red blocks, but does not highlight transistors PSW2. *Id.* Petitioner contends that although it "did not originally annotate PSW2 in the figure in red," the Board's "sole focus on and discussion of PSW1 overlooked that the Petition also relied on PSW2, which Mizuno expressly teaches and illustrates is a transistor." Req. Reh'g. 4–5. Petitioner further contends that had we "properly considered the Petition's assertions regarding the power island circuit CKT coupled to multiple transistors PSW1 and PSW2," we would have "properly concluded that Petitioner's contentions and mappings demonstrate that Mizuno teaches the power islands limitation of the claims." *Id.* at 5. We disagree.

First, although the Petition included a single statement identifying PSW2 as a "sleep transistor," it did not map PSW2 to the "power island" claim limitation. *See* Pet. 59–66. Instead, the Petition identified Mizuno's "power island" as circuit "CKT" coupled to sleep transistor "PSW1." *See* Pet. 60 ("A POSITA would have understood and found obvious that . . . Mizuno's 'circuit block CKT,' depicted in Figures 1 and 22 . . . coupled to a power switch PSW1, comprises a power island.") (citations omitted). *Id.* at 60–61 (modified Mizuno Figures 1 and 22, which added the term "Power Island" in red font and highlighted circuit CKT and transistor PSW1 in red, but not transistor PSW2). *Id.* at 61 ("A POSITA would have understood and found it obvious that Mizuno's 'circuit block CKT,' . . . when coupled with power switch PSW1, is a power island.") (citations omitted). Thus, we did not err by not considering PSW2 as part of Petitioner's "power island" contention even if Petitioner *may have* intended to identify PSW2 as part of a "power island." *See Harmonic Inc. v. Avid Tech., Inc.*, 815 F.3d 1356, 1363 (Fed. Cir. 2016) ("In an IPR, the petitioner has the

burden from the onset to show *with particularity* why the patent it challenges is unpatentable.") (emphasis added); *see also Parus Holdings, Inc. v. Google LLC*, 70 F.4th 1365, 1371–72 (Fed. Cir. 2023) (finding "[T]he Board should not be forced 'to play arch[a]eologist with the record'" (quoting *DeSilva v. DiLeonardi*, 181 F.3d 865, 866–67 (7th Cir. 1991)) and "Judges are not like pigs, hunting for truffles buried in briefs" (quoting *United States v. Dunkel*, 927 F.2d 955, 956 (7th Cir. 1990))).

Second, we did not misapprehend Petitioner's claim mapping for the following additional reason. Claim 1, in addition to requiring each power island to include "circuitries and sleep transistors [plural]," also requires "a sleep generator . . . to provide a variable voltage" and "the sleep transistors being configured to receive the variable voltage." Ex. 1001, 13:25–33. Claim 10, similarly, requires "receiving the variable voltage at the sleep transistors to facilitate reduction of power consumed by the circuitries." *Id.* at 14:25–27. Thus, in the context of these claims, transistors are sleep transistors if they receive a variable voltage. Claims 2–9 and 11–16 also require sleep transistors to receive a variable voltage due to their dependencies from claims 1 and 10, respectively. 35 U.S.C. § 112 ¶ 4.

The Petition identifies PSWGATE1, which is supplied to transistor PSW1 but not to transistor PSW2, as the variable voltage. *See* Pet 70 (Mizuno "provides a voltage 'PSWGATE1' (i.e., a variable voltage) to the 'power switch PSW1' (i.e., sleep transistor) to turn the switch on and off.") (citations omitted). This is shown in another modification of Mizuno's Figure 22, made by Petitioner, which is reproduced below.

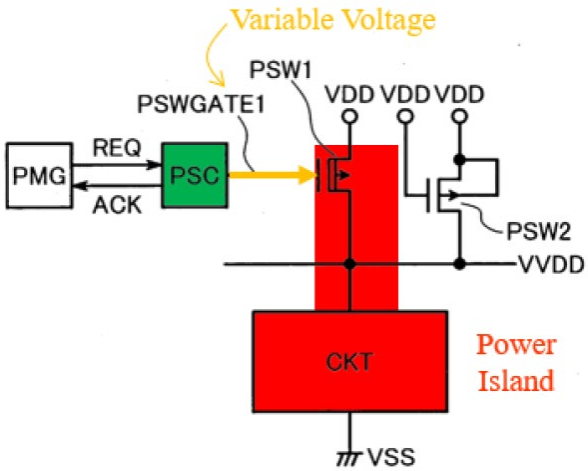

Id. at 71. The Figure above is a Petitioner-modified version of Figure 22 of Mizuno, illustrating Petitioner's mapping of Mizuno's power switch controller PSC to the claimed "sleep generator . . . to provide a variable voltage." Pet. 70–74. The modified Figure, in addition to failing to highlight PSW2 as a "sleep transistor," shows PSC generating a variable voltage PSWGATE1 that is received by transistor PSW1 but not by transistor PSW2, making the former but not the latter a "sleep transistor being configured to receive the variable voltage." Ex, 1001, 13:32–33. Petitioner relies on the same disclosure to teach the corresponding claim 10 limitation. Pet. 91. Thus, for this additional reason, we did not err in finding Petitioner's mapping of Mizuno to the challenged claims only identified "power islands" containing a single "sleep transistor," PSW1, rather than plural "sleep transistors" as required.

C. Petitioner's Reliance on a POSITA's Knowledge

Petitioner also argues that we erred because we "misapprehended the knowledge or skill of a person or ordinary skill in the art . . . with regards to sleep transistors." Req. Reh'g. 5. Specifically, Petitioner argues that we "did not credit Dr. Min or the '349 Patent's express acknowledgement that methods of reducing leakage current were well-known in the prior art." *Id.*

at 6. According to Petitioner, "Dr. Min explained that Figure 1 of the '349 Patent showed that multiple sleep transistors were 'prior art.'" *Id.* at 6–8 (citing Ex. 1003 ¶¶ 58–62). We disagree.

First, Petitioner fails to point out where the Petition relies on a POSITA's knowledge to show how Takahashi or Mizuno teaches or suggests power islands containing plural sleep transistors. *See* Pet. 10–16, 59–66 (Petitioner's mapping of Takahashi and Mizuno, respectively, to the "power islands" limitations); Req. Reh'g 5–8 (failing to demonstrate where this argument was previously made by failing to cite any of these pages). A request for rehearing "must specifically identify all matters the party believes the Board misapprehended or overlooked, and *the place where each matter was previously addressed*." 37 C.F.R. § 42.71(d) (emphasis added). We cannot have misapprehended or overlooked an argument that Petitioner *did not make* in the Petition.

Second, Dr. Min never described the prior art disclosed in the '349 patent as a power island have plural sleep transistors. A modified version of Figure 1 of the '349 patent, upon which Petitioner's request relies, is reproduced below.

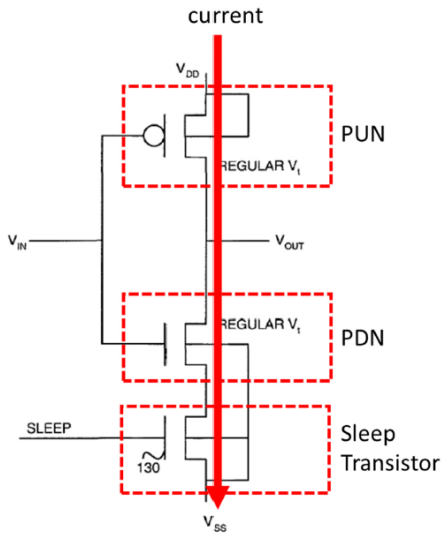

Req. Reh'g 7. The Figure above is a Petitioner-modified version of Figure 1 of the '349 patent, which the patent describes as "an illustration of circuitry including a sleep transistor [singular] in the prior art." Ex. 1001, 3:4–5, Fig. 1. The same modified Figure is reproduced in Dr. Min's declaration. Ex. 1003 ¶ 61. The Figure illustrates and clearly labels a *single* sleep transistor 130 coupled to two transistors above it that form a logic circuit. Ex. 1001, 2:19–28, 3:4–5. The logic circuit, together with single sleep transistor 130, forms a power island. *Id.* Dr. Min's testimony does not differ from this description. *See* Ex. 1003 ¶¶ 61–62 ("[T]he transistor shown at the top of the stack corresponds to the pull up network (PUN) and the transistor shown in the middle of the stack is the pull down network (PDN). The transistor shown at the bottom of the stack *is the sleep transistor* [singular].") (emphasis added).

Thus, not only has Petitioner failed to identify where the Petition relied on the knowledge of a POSITA to teach power islands having plural sleep transistors, but Petitioner has failed to show how Dr. Min's testimony demonstrated such knowledge. Accordingly, for these reasons, Petitioner has failed to demonstrate how we erred in our decision to deny institution of *inter partes* review.

III. CONCLUSION

We have reviewed the Petition, our Decision, and Petitioner's Request for Rehearing. For the reasons discussed above, Petitioner has failed to demonstrate that we misapprehended or overlooked any of the arguments presented in the Petition, that any of our conclusions of law were erroneous, or that any of our findings of fact were clearly erroneous. Therefore, Petitioner has failed to demonstrate that we abused our discretion in denying

its Petition for *inter partes* review. Accordingly, Petitioner's request for rehearing is *denied*.

IV. ORDER

In consideration of the foregoing, it is hereby:

ORDERED that Petitioner's Request for Rehearing of the Decision Denying Institution of *inter partes* review is *denied*.

DENIED

FOR PETITIONER:

Timothy Riffe
Joseph Colaianni
Linhong Zhang
Tim Rawson
Jared Hartzman
FISH & RICHARDSON P.C.
riffe@fr.com
colaianni@fr.com
lwzhang@fr.com
rawson@fr.com
hartzman@fr.com

FOR PATENT OWNER:

Kenneth Weatherwax
Parham Hendifar
LOWENSTEIN & WEATHERWAX LLP
weatherwax@lowensteinweatherwax.com,
hendifar@lowensteinweatherwax.com