US 20150308244A1

(19) United States
(12) Patent Application Publication
Cardamone et al.
(10) Pub. No.: US 2015/0308244 A1
(43) Pub. Date: Oct. 29, 2015

(54) **METHODS AND SYSTEM FOR CONTROLLING A LINEAR MOTOR FOR A DEEP WELL OIL PUMP**

(71) Applicant: **MOOG INC.**, East Aurora, NY (US)

(72) Inventors: **David P. Cardamone**, Lansdale, PA (US); **Carl Deirmengian**, Media, PA (US); **Eugene F. Keohane**, Springfield, PA (US); **Benjamin W. Kinnaman**, Jericho, VT (US)

(21) Appl. No.: **14/646,970**

(22) PCT Filed: **Nov. 26, 2013**

(86) PCT No.: **PCT/US2013/071976**

§ 371 (c)(1),
(2) Date: **May 22, 2015**

Related U.S. Application Data

(60) Provisional application No. 61/729,815, filed on Nov. 26, 2012.

Publication Classification

(51) **Int. Cl.**
E21B 43/12 (2006.01)
G05B 15/02 (2006.01)

(52) **U.S. Cl.**
CPC ***E21B 43/128*** (2013.01); ***G05B 15/02*** (2013.01)

(57) **ABSTRACT**

A deep well linear motor pump system (**122**) comprising a downhole linear electric motor (**222**) having a stator and a shaft configured to move linearly relative to the stator, a downhole pump (**220**) having an inlet (**227**), an outlet (**228**), and a piston coupled to the linear motor shaft, a motor driver system (**318**) connected with the linear motor and configured to provide drive commands to the linear motor, a surface control computer (**126**) connected with the motor drive system and configured to control the linear motor, a sensor system (**224**) communicating with the control computer and configured to sense operating parameters of the linear motor, and the sensor system comprising a synchronous serial interface encoder configured to sense position of the motor shaft and a temperature sensor configured to sense the temperature of the motor.

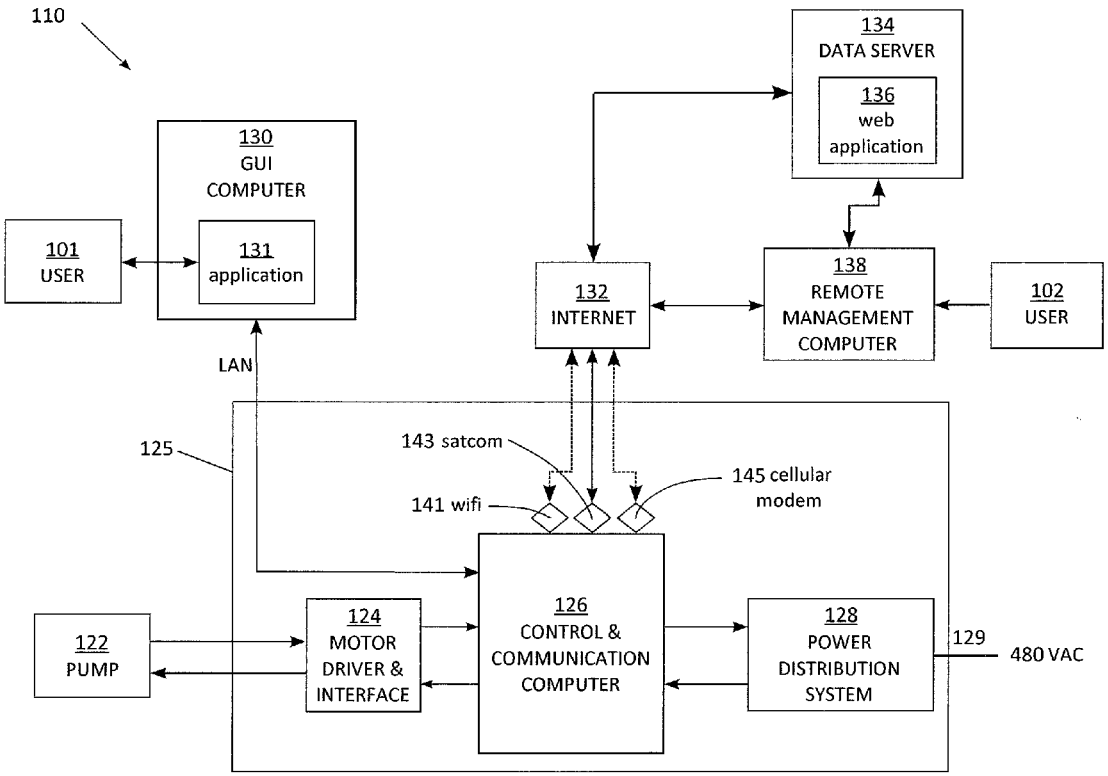

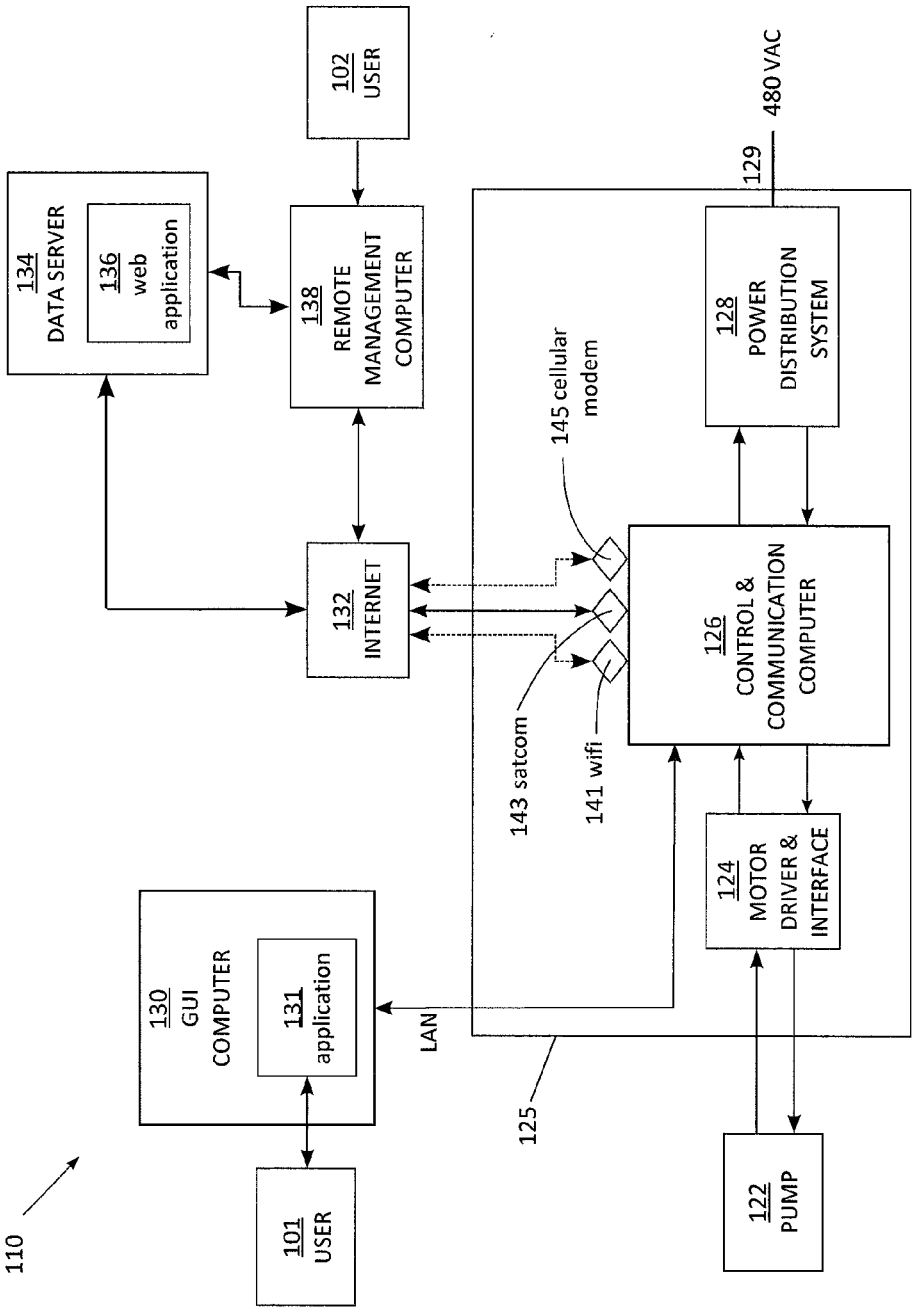
110
101 USER
130 GUI COMPUTER
131 application
LAN
125
122 PUMP
124 MOTOR DRIVER & INTERFACE
126 CONTROL & COMMUNICATION COMPUTER
143 satcom
141 wifi
145 cellular modem
132 INTERNET
128 POWER DISTRIBUTION SYSTEM
129
480 VAC
134 DATA SERVER
136 web application
138 REMOTE MANAGEMENT COMPUTER
102 USER

FIG. 1

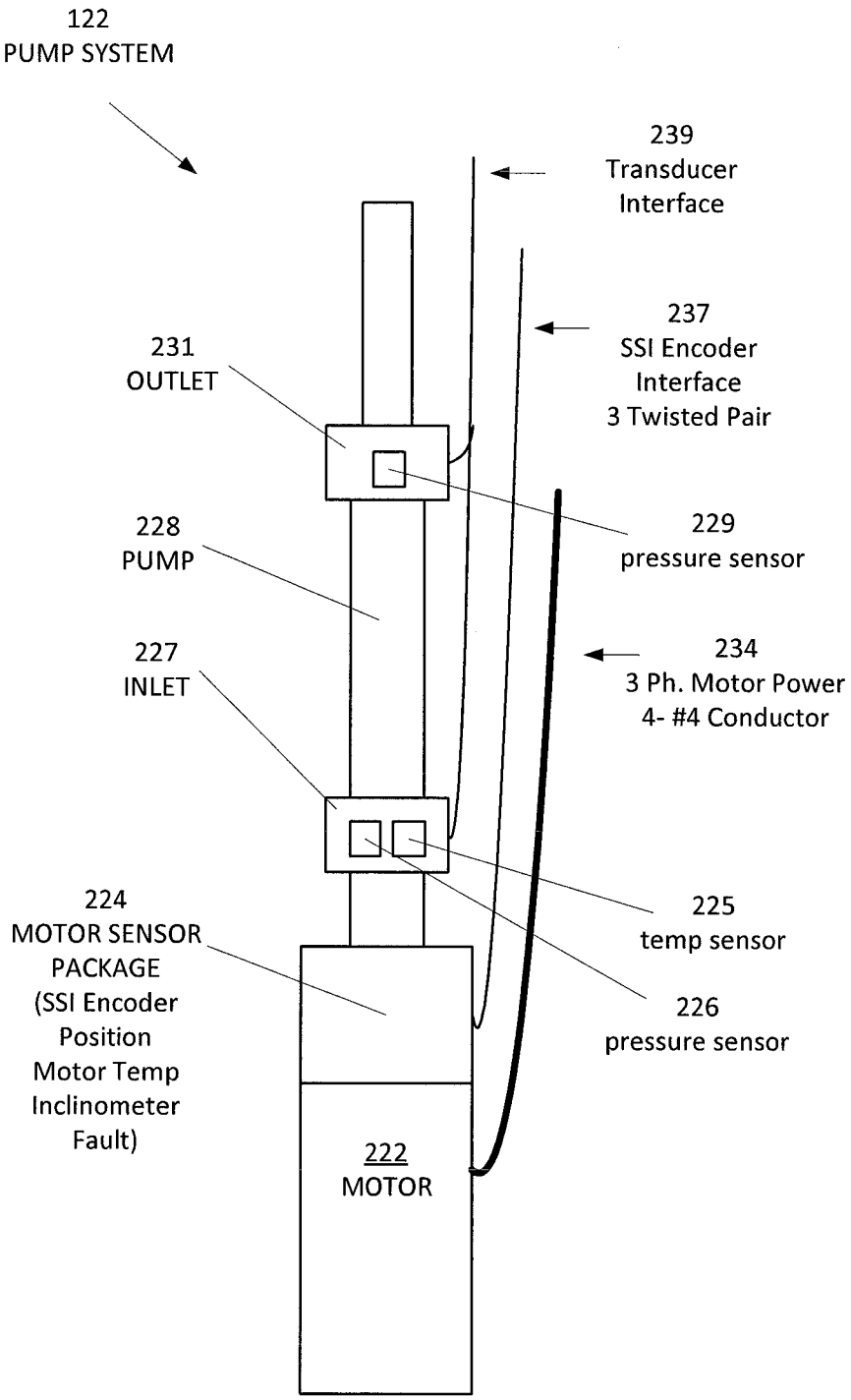
122
PUMP SYSTEM
239
Transducer
Interface
237
SSI Encoder
Interface
3 Twisted Pair
231
OUTLET
229
pressure sensor
228
PUMP
234
3 Ph. Motor Power
4- #4 Conductor
227
INLET
225
temp sensor
224
MOTOR SENSOR
PACKAGE
(SSI Encoder
Position
Motor Temp
Inclinometer
Fault)
226
pressure sensor
222
MOTOR

FIG. 2

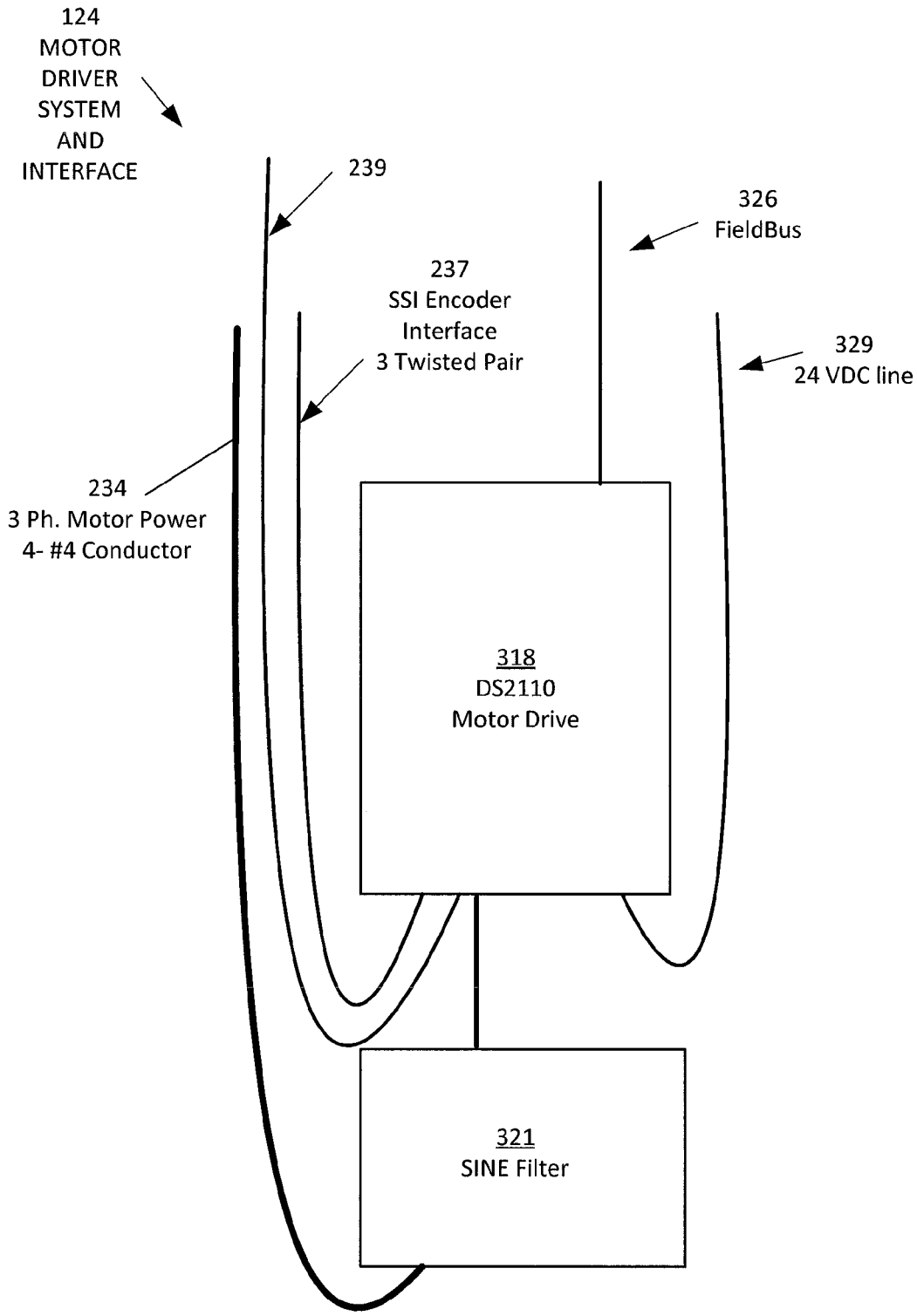
124
MOTOR
DRIVER
SYSTEM
AND
INTERFACE
239
326
FieldBus
237
SSI Encoder
Interface
3 Twisted Pair
329
24 VDC line
234
3 Ph. Motor Power
4- #4 Conductor
318
DS2110
Motor Drive
321
SINE Filter

FIG. 3

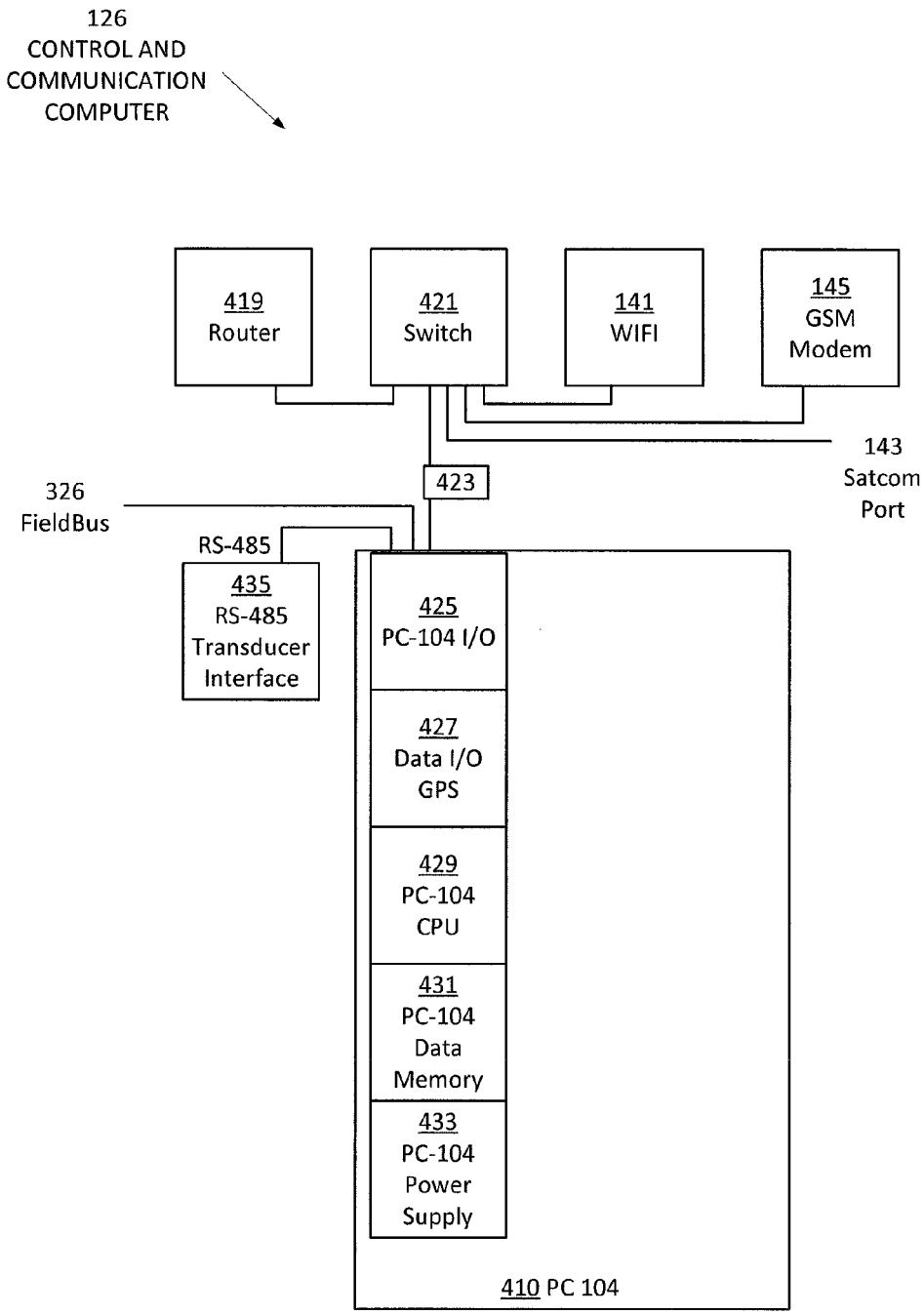
126
CONTROL AND
COMMUNICATION
COMPUTER
419
Router
421
Switch
141
WIFI
145
GSM
Modem
143
Satcom
Port
423
326
FieldBus
RS-485
435
RS-485
Transducer
Interface
425
PC-104 I/O
427
Data I/O
GPS
429
PC-104
CPU
431
PC-104
Data
Memory
433
PC-104
Power
Supply
410 PC 104

FIG. 4

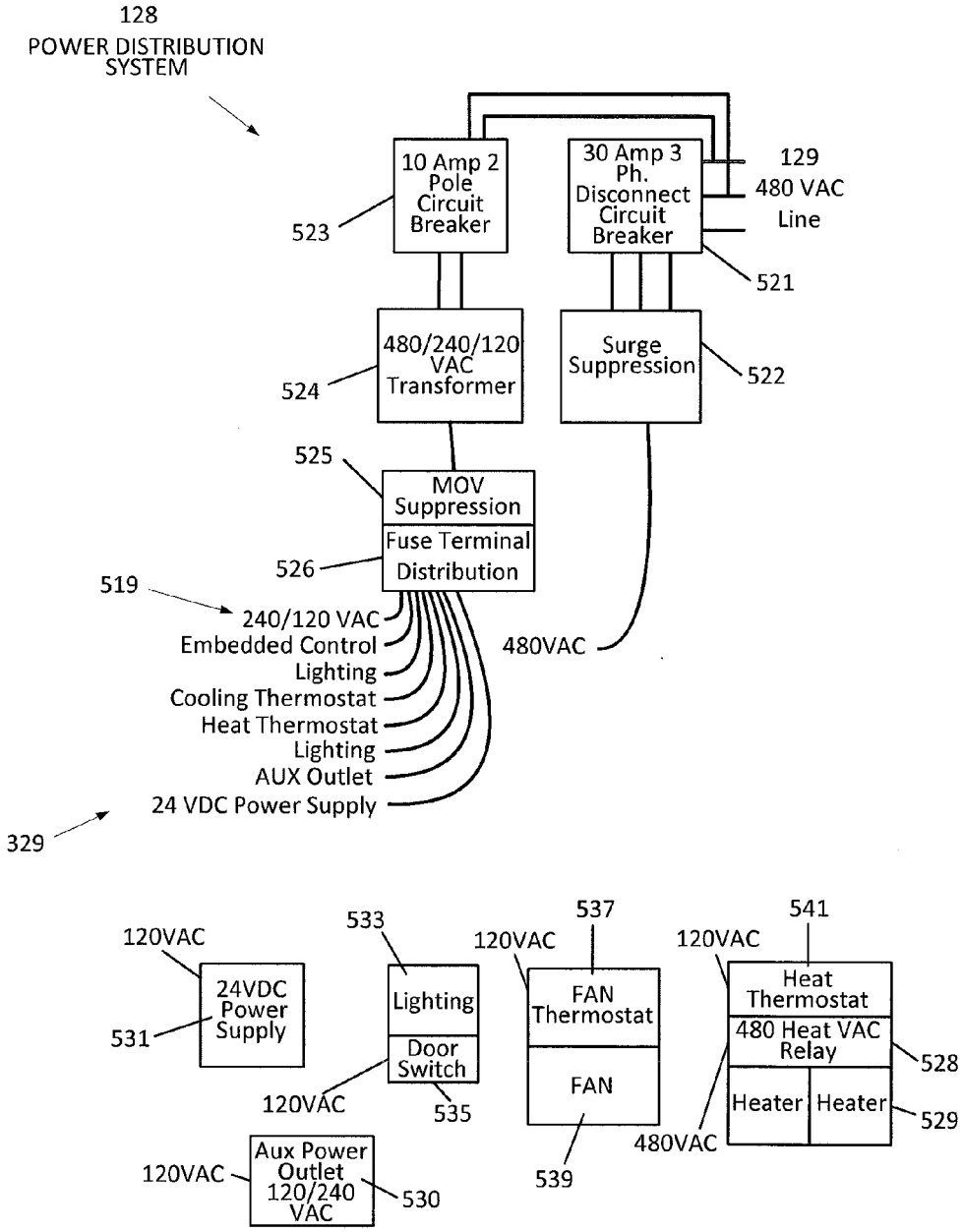
128
POWER DISTRIBUTION SYSTEM
10 Amp 2 Pole Circuit Breaker
523
30 Amp 3 Ph. Disconnect Circuit Breaker
129
480 VAC
Line
521
480/240/120 VAC Transformer
524
Surge Suppression
522
525
MOV Suppression
Fuse Terminal Distribution
526
519
240/120 VAC
Embedded Control
Lighting
Cooling Thermostat
Heat Thermostat
Lighting
AUX Outlet
24 VDC Power Supply
480VAC
329
120VAC
24VDC Power Supply
531
533
Lighting
Door Switch
120VAC
535
Aux Power Outlet 120/240 VAC
120VAC
530
537
120VAC
FAN Thermostat
FAN
539
541
120VAC
Heat Thermostat
480 Heat VAC Relay
528
Heater
Heater
529
480VAC

FIG. 5

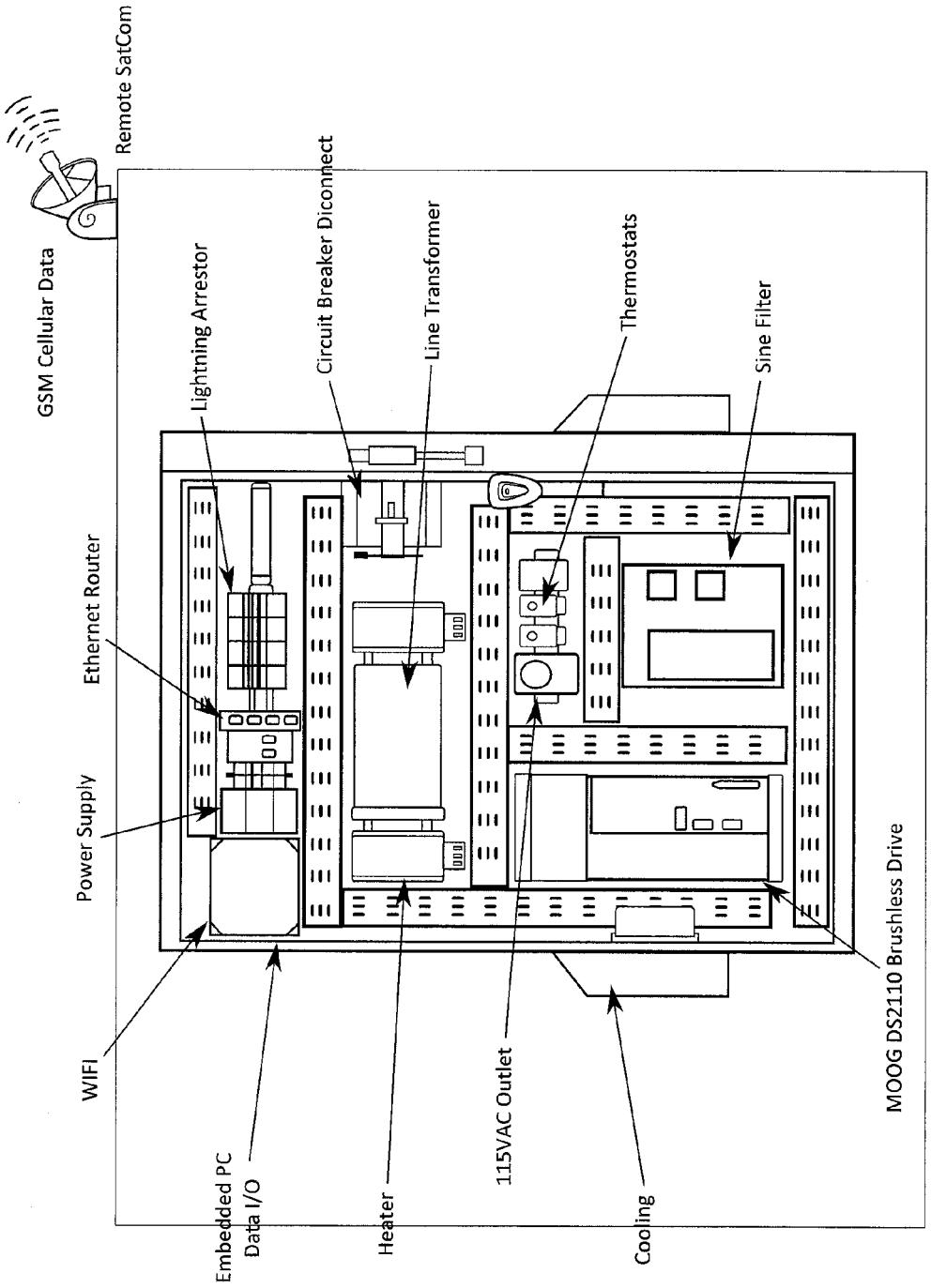
Remote SatCom
GSM Cellular Data
Lightning Arrestor
Circuit Breaker Diconnect
Line Transformer
Thermostats
Sine Filter
Ethernet Router
Power Supply
WIFI
Embedded PC
Data I/O
Heater
115VAC Outlet
Cooling
MOOG DS2110 Brushless Drive

FIG. 6

TYPICAL DYNAGRAPH CARDS SHOWING VARIOUS WELL CONDITIONS AS AN AID FOR QUICK INTERPRETATION

Downhole Pump Card Examples

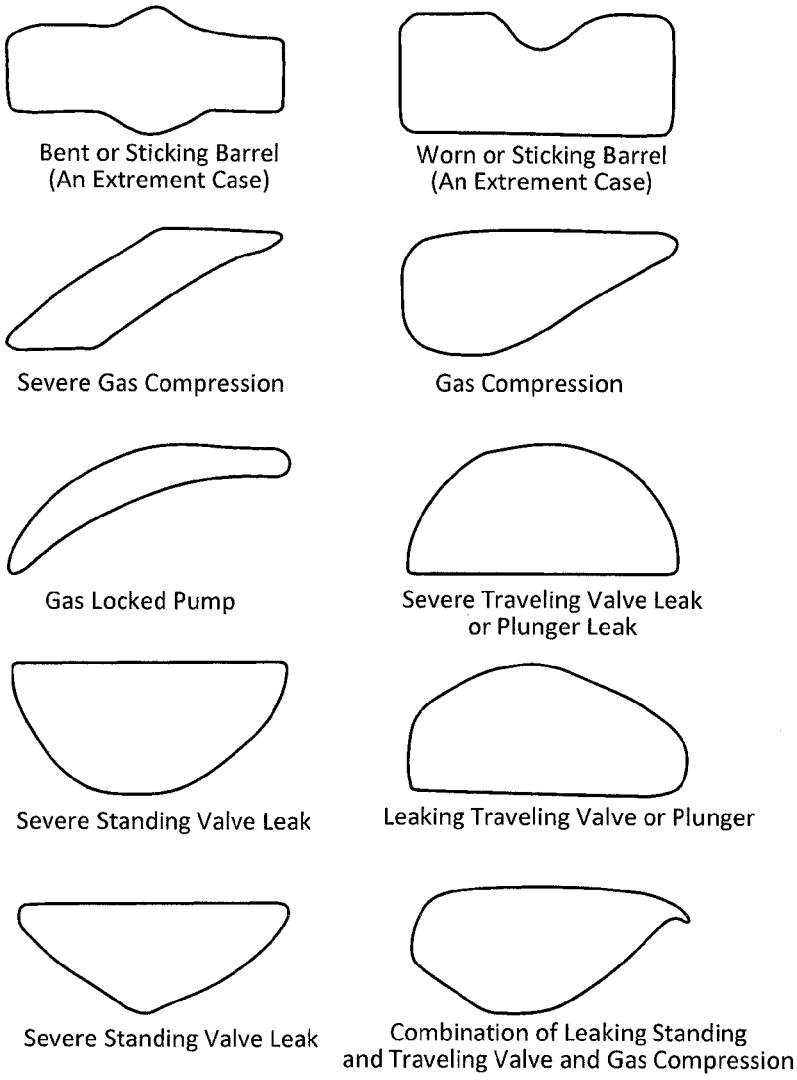

FIG. 7

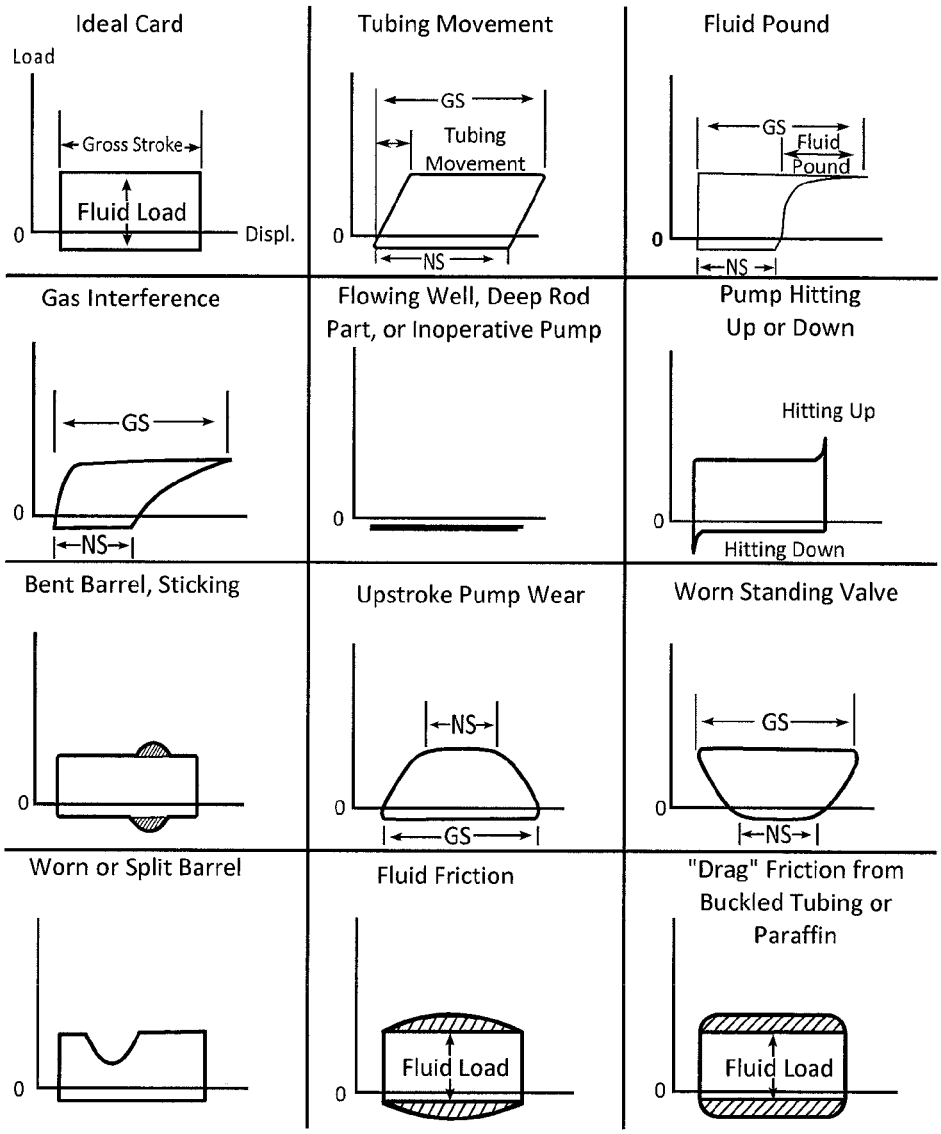
Ideal Card
Load
Gross Stroke
Fluid Load
0
Displ.
Tubing Movement
GS
Tubing Movement
0
NS
Fluid Pound
GS
Fluid Pound
0
NS
Gas Interference
GS
0
NS
Flowing Well, Deep Rod Part, or Inoperative Pump
0
Pump Hitting Up or Down
Hitting Up
0
Hitting Down
Bent Barrel, Sticking
0
Upstroke Pump Wear
NS
0
GS
Worn Standing Valve
GS
0
NS
Worn or Split Barrel
0
Fluid Friction
Fluid Load
0
"Drag" Friction from Buckled Tubing or Paraffin
Fluid Load
0

FIG. 8

METHODS AND SYSTEM FOR CONTROLLING A LINEAR MOTOR FOR A DEEP WELL OIL PUMP

TECHNICAL FIELD

[0001] The present invention relates generally to the field of oil and gas wells, and more particularly to a downhole linear motor pump system.

BACKGROUND ART

[0002] U.S. Pat. No. 1,655,825 is directed to a linear electromagnetic motor coupled to an oil well pump. Solenoids are mounted within a casing and arranged to actuate a core of stacked magnets interspersed between non-magnetic members. The core is coupled to a pump plunger and an upper valve and two lower valves allow only upwards flow of fluid.

[0003] U.S. Pat. No. 5,049,046 is directed to a downhole electromagnetic motor-pump assembly having a linear motor, a pump having a reciprocating piston, and a remote wireless monitoring station.

[0004] U.S. Pat. No. 5,831,353 is directed to a motor-pump assembly having a positive displacement pump and a motor for driving the pump to allow the fluids in the production tube to be lifted to the upper ground level. A controller is provided for controlling the linear motor and supplies the motor with a certain number of direct current pulses.

BRIEF SUMMARY OF THE INVENTION

[0005] With parenthetical reference to the corresponding parts, portions or surfaces of the disclosed embodiment, merely for the purposes of illustration and not by way of limitation, provided is a system (**110**) for operating a downhole pump with a linear motor, including a pump system (**122**), a motor drive system (**124**), a control and communication computer system (**126**), and a power distribution system (**128**). The control computer system, motor drive system, and power distribution system may be contained in an environmental protection box (**125**). The system may include a GUI computer (**130**), a data server (**134**), and a remote management computer (**138**).

[0006] The pump system may include a linear motor (**222**), a pump (**228**), and a motor sensor package (**224**). The motor sensor package may include an SSI encoder position sensor, a motor temperature sensor, an inclinometer, and a fault sensor. The pump may include an inlet (**227**) and the inlet may have a temperature sensor (**225**) and a pressure sensor (**226**). The pump may also have an outlet (**231**), and the outlet may have a pressure sensor (**229**). The motor may receive power from a three phase motor power line (**234**). The motor sensor package may be connected to the control computer through a three twisted pair connection (**237**). The inlet and outlet pressure sensors and temperature sensor may be connected to the control computer through a line (**239**) which uses a transducer.

[0007] The motor drive system (**124**) may include a motor drive unit (**318**) and a SINE filter (**321**). The motor drive unit may be configured and arranged to receive and transmit transducer twisted pair lines from the pump system. The motor drive unit may support a field bus interface (**326**). The field bus interface may include DeviceNet, RS485, F-NET, Modbus, FireWire, CANopen, Ethernet IP, ProfiNet, SERCOS, 12-bit Analog IN, 16-bit Analog I/O, and/or other similar bus hardware and protocols.

[0008] The control and communication computer system may include a router (**419**), a switch (**421**), a wifi access port (**141**), GSM modem (**145**), a satcom modem or port (**143**), and a single board computer (**410**). The control computer may include an Ethernet (**423**) for linking each of its components. The single board computer may include a PC-104 single board computer or other embedded computer. The single board computer may have an I/O (**425**), a GPS (**427**), a CPU (**429**), a memory (**431**), and a power supply (**433**). The control computer system may include an RS-485 transducer interface (**435**) for communication.

[0009] The control and communication computer may have a control algorithm for controlling the motor drive system, and/or pump system. The control algorithm may control the motor drive system and/or pump as a function of sensory data. The sensory data may be data from the pump system, the motor drive system, the power distribution system, and/or the data server. The control algorithm may be capable of recognizing several dyna card operating regimes and/or may be configured to adjust control of the motor drive as a function of recognizing dyna card operating regimes. The dyna card operating regimes may include bent or sticking barrels, worn or sticking barrels, severe gas compression, gas compression, gas locked pump, severe traveling valve leak or plunger leak, severe standing valve leak, leaking traveling valve or plunger, severe standing valve leak, or a combination of leaking standing and traveling valve and gas compression. Dyna card operating regimes may further include tubing movement, fluid pound, pump hitting, upstroke pump wear, worn standing valve, worn or split barrel, fluid friction, and/or drag friction.

[0010] The power distribution system may include a three phase AC power input, and may provide an AC power output and a DC power output. The power distribution system may include one or more circuit breakers (**521**, **523**), a surge suppression unit (**522**), a transformer (**524**), a MOV suppression unit (**525**), and a fuse terminal distribution block (**526**). The power distribution system may further include a cooling thermostat (**537**), a cooling fan or air conditioner (**539**), a heat thermostat (**541**), a heater relay (**528**), and/or a heater (**529**). The power distribution unit may further include an auxiliary power outlet (**530**). The power distribution unit may be configured and arranged to automatically keep the environmental protection box at a temperature within a predetermined temperature range.

[0011] The GUI computer may contain a software application (**131**) for allowing a user (**101**) to view sensor data, and view and set control computer operating parameters and algorithms. The data server may contain a web application (**136**) for allowing a user (**102**) to link with a remote management computer (**138**) and allow user (**102**) to view sensor data, and view and set control computer operating parameters. The data server may contain a database for storing sensor data from the control computer. The sensory data may be periodically transferred from the control computer to the data server. The data server may also be configured to periodically transmit secondary operating parameters to the control computer. The secondary operating parameters may include the price of oil, and the price of electricity. The data server may be configured and arranged to operate a number of pump systems.

BRIEF DESCRIPTION OF THE DRAWINGS

[0012] FIG. **1** is a system block diagram of a first embodiment system.

[0013] FIG. **2** is a block diagram of the pump system shown in FIG. **1**.

[0014] FIG. **3** is a block diagram of the motor driver system shown in FIG. **1**.

[0015] FIG. **4**. is a block diagram of the control and communication computer shown in FIG. **1**.

[0016] FIG. **5** is a block diagram of the power distribution system shown in FIG. **1**.

[0017] FIG. **6**. is a model schematic of the containment box of the system shown in FIG. **1**.

[0018] FIG. **7** is a chart of dyna card pump operating regimes.

[0019] FIG. **8** is a second chart of dyna card pump operating regimes.

DETAILED DESCRIPTION OF THE PREFERRED EMBODIMENTS

[0020] At the outset, it should be clearly understood that like reference numerals are intended to identify the same structural elements, portions or surfaces consistently throughout the several drawing figures, as such elements, portions or surfaces may be further described or explained by the entire written specification, of which this detailed description is an integral part. Unless otherwise indicated, the drawings are intended to be read (e.g., cross-hatching, arrangement of parts, proportion, degree, etc.) together with the specification, and are to be considered a portion of the entire written description of this invention. As used in the following description, the terms "horizontal", "vertical", "left", "right", "up" and "down", as well as adjectival and adverbial derivatives thereof (e.g., "horizontally", "rightwardly", "upwardly", etc.), simply refer to the orientation of the illustrated structure as the particular drawing figure faces the reader. Similarly, the terms "inwardly" and "outwardly" generally refer to the orientation of a surface relative to its axis of elongation, or axis of rotation, as appropriate.

[0021] Referring now to the drawings, and more particularly to FIG. **1**, a system for operating a deep oil well pump with a linear motor is provided, a first embodiment of which is generally indicated at **110**. System **110** generally includes deep well pump system **122**, motor driver **124**, control and communication computer **126**, and power distribution system **128**. Also part of system **110** are GUI computer **130**, data server **134**, and remote management computer **138**. Pump system **122** is driven by motor driver & interface **124**. Control and communication computer **126** provides motor driver **124** with command signals to properly drive pump system **122**. Control and communication computer **126** also contains communication systems for interacting with data server **134** and GUI computer **130**. Control and communication computer **126** stores and relays sensory data from pump system **122** and driver **124** to data server **134** and/or GUI computer **130**. GUI computer **130** provides user **101** a user interface for reviewing sensory data and setting operational parameters of control and communication computer **126**. Data server **134** includes web application **134** which provides an interface to remote management computer **138**. Through interaction via web application **136**, remote management computer **138** provides user **102** with a user interface for reviewing sensory data and setting operational parameters of control and communication computer **126**. Data server **134** also acts as a data storage for sensory data received from control and communication computer **126**. Motor driver and interface system **124**, control and communicating computer system **126**, and power distribution system **128** may all be contained in a common box or cabinet **125** designed to provide protection from the surrounding environment.

[0022] System **110** provides high level and detailed remote control of deep oil well pump system **122** with numerous features for highly efficient and safe operation. Pump system **122** is arranged near the bottom of a deep oil well and has the primary purpose of pumping oil up to the surface of the oil well. Pump system **122** includes a linear electromagnetic pump motor. Pump system **122** contains several sensors for monitoring pump operation and deep oil well conditions. Pump system **122** is connected to motor driver and interface **124**.

[0023] Motor driver **124** provides pump system **122** with the high powered power lines for driving the linear electromagnetic motor. Motor driver and interface **124** also contains data lines for relaying sensory data from pump system **122** and motor driver and interface **124** to control and communication computer **126**.

[0024] Control and communication computer **126** contains a real time controller/CPU for providing motor driver **124** with the proper gate drive signals for operating pump system **122** with a desired movement profile. Computer **126** is arranged at the surface of the deep oil well. Control and communication computer **126** includes data sampling and storage mechanisms for receiving and storing sensory data from both pump system **122** and motor driver **124**. Additionally, control and communication computer **126** includes communications transceivers including wifi modem **141**, satellite modem **143**, and cellular data modem **145**. The communications transceivers provide a network link to data server **134**. Control and communication computer may also optionally have a wired network connection to a network for connection to data server **134**. Control and communication computer **126** includes data storage for storing operational parameters as well as sensory data logs. Control and communication computer **126** provides a local area network (LAN) for interfacing with GUI computer **130**.

[0025] Power for computer **126**, and motor driver **124** is provided by power distribution system **128**. Power distribution system converts a high voltage AC voltage from a supply line into lower regulated voltage for computer **126** and motor driver **124**. Power distribution system **128** includes transformers, filters, and monitoring sensors and protection devices. Sensory data is provided from power distribution system **128** to control and communication computer **126**. Power distribution system **128** also receives control signals from control and communication computer **126**.

[0026] GUI computer **130** may be a portable computer brought by a service user **101** in order to provide on-site maintenance and/or monitoring. Alternatively, GUI computer may be a desktop computer arranged and kept at the deep oil well surface in proximity to control and communication computer **126**. GUI computer **130** interfaces to control and communication computer **130** through a LAN provided by computer **126**. GUI computer **130** generally includes a display for providing user **101** a graphical user interface for viewing system operational data. Operational data includes sensory data from pump system **122**, motor driver **124**, power distribution system **128**, and control and communication computer **126**. GUI computer **130** also provides user **101** with a mechanism for changing operational parameters of control and communication computer **126**.

[0027] Data server **134** is a server computer arranged at a location remote from the oil well. Data server **134** is connected to network **132** which is linked to control and communication computer **126** through one of a variety of communication link types, including hardwire connection, or internet connection via wire, wifi, satellite modem, and/or cellular data connections. Data server receives sensory data logs from control and communication computer **126**. Data server **134** contains web server/web application **136** for providing a client interface for viewing the sensory data logs on remote management computer **138**. Web application **136** also provides a mechanism for setting the control parameters on control and communication server **126**.

[0028] While certain types of computers are described herein, processing and analysis may be practiced with different computer configurations, including internet appliances, hand-held devices, wearable computers, multi-processor systems, programmable consumer electronics, network PCs, mainframe computers, a system on a chip, or a programmable logic device such as a FPGA (field programmable gate array) or a PLD (programmable logic device). Various alternative memory devices may be included with the computer, such as flash memory, a hard disk drive, or other solid state memory device. The programming can be embodied in any form of computer-readable medium or a special purpose computer or data processor that is programmed, configured or constructed to perform the subject instructions. The term computer or processor as used herein refers to any of the above devices as well as any other data processor. Some examples of processors are microprocessors, microcontrollers, CPUs, PICs, PLCs, PCs or microcomputers. A computer-readable medium comprises a medium configured to store or transport computer readable code, or in which computer readable code may be embedded. Some examples of computer-readable medium are CD-ROM disks, ROM cards, floppy disks, flash ROMS, RAM, nonvolatile ROM, magnetic tapes, computer hard drives, conventional hard disks, and servers on a network. The computer systems described above are for purposes of example only. An embodiment of the invention may be implemented in any type of computer system or programming or processing environment. In addition, it is meant to encompass processing that is performed in a distributed computing environment, were tasks or modules are performed by more than one processing device or by remote processing devices that are run through a communications network, such as a local area network, a wide area network or the internet. Thus, the term computer is to be interpreted expansively.

[0029] FIG. **2** is a block diagram of pump system **122**. Pump system **122** includes motor **222** arranged near the bottom of an oil well and down-hole pump **228**. Motor **222** is a three phase permanent magnet linear electric motor having a stationary stator and a sliding shaft. Motor **222** receives power from three phase power line **234** from motor driver **124**. Coupled to motor **222** is motor sensor package **224**. Motor sensor package **224** includes a synchronous serial interface (SSI) encoder for sensing the position of the linear motor shaft, a temperature sensor for monitoring the motor temperature, an inclinometer for measuring the angle that the linear motor is mounted, and a circuit fault detector. Motor **222** is coupled to down-hole pump **228**. Down-hole pump **228** includes a standing valve, a traveling valve, a piston or plunger, inlet **227**, and outlet **231**. Pump **228**'s piston is coupled to motor **222**'s shaft. As pump **228**'s piston is forced up and down by motor **222**, oil is drawn into inlet **227**, and pushed up out of outlet **231**. Outlet **231** is coupled to production tubing leading to the surface of the oil well.

[0030] Inlet **227** has temperature sensor **225** for providing the temperature at the inlet and pressure sensor **226** for providing oil or fluid pressure at the inlet. The inlet pressure can be used to determine the depth of oil remaining in the oil well. Outlet **231** includes pressure sensor **229**. The sensor output from inlet **227** and outlet **231** are combined into a single conductor transducer interface **239**. Sensory data from motor sensor package **224** is similarly combined into a **3** twisted pair interface. The data interface may be implemented using alternative protocols for either analog or digital signal transfer.

[0031] FIG. **3** is a block diagram of motor driver system and interface **124**. Motor driver system **124** includes motor drive unit **318** and SINE filter **321**. In this embodiment, motor drive unit **318** is a DS2110 servo drive from Moog Inc., East Aurora, N.Y., USA. However, other similar electromagnetic motor drive units may be used. Motor drive unit **318** receives sensory data lines **237** and **239**. Motor drive unit **318** interfaces with control and communication computer **126** over digital interface bus **326**. Sensory data from lines **237** and **239** is relayed to computer **126** over bus **326**. Bus **326** is also used by computer **126** to relay drive commands to motor drive unit **318**. Bus **326** has multiple protocols implemented including DeviceNet, RS485, F-NET, Modbus, FireWire, CANopen, Ethernet IP, ProfiNet, and SERCOS. However, other similar protocols may also be used as alternatives.

[0032] Motor drive unit receives high power and 24 volt DC line **329** from power distribution system **128**. The 24 volt line **329** may or may not be relayed through the control and communication computer **126**.

[0033] FIG. **4** is a block diagram of control and communication computer system **126**. Computer system **126** includes single board computer **410**, which is implemented with a PC 104 computer. However, other similar computers may be used for computer **410**. Computer system **126** includes router **419**, switch **421**, data transceivers for wifi **141**, and GSM cellular modem **145**. A satcom port **143** is provided for connection to a satellite modem/antenna. Switch **421** connects router **419**, wifi transceiver **141**, GSM modem **145**, sitcom port **143**, and single board computer **410** over an Ethernet **423**. Router **419**, wifi transceiver **141**, GSM modem **145**, and satcom port **143** all provide external network connections for single board computer **410**. This external network connection is primarily used for communication between single board computer **410** and data server **134**.

[0034] Single board computer **410** includes I/O **425**, GPS **427**, CPU **429**, Memory **431**, and power supply **433**. The Ethernet **423** connects to single board computer I/O **425**. I/O **425** also interfaces with bus **326** and RS-485/RS232 transducer interface **435**.

[0035] Application programs are stored in memory **431** and configured to run on CPU **429**. More specifically, programs on single board computer **410** provide driver control signals to motor driver system **124**, receive and record sensory data from pump **122**, motor driver **124**, and power distribution system **128**, upload data logs to data server **134** and/or GUI computer **130**, and receive configuration commands from data server **134** and/or GUI computer **130**.

[0036] Additionally, programs on single board computer **410** may monitor the received sensory data and alter the motor drive commands sent to motor driver system **124** as a function of the received sensory data. More specifically, programs on computer **410** may recognize one of several types of

operating regimes, as specified in FIGS. **7** and **8**. FIGS. **7** and **8** provide motor load vs. pump displacement curves for several known operating regimes. For example, as shown in FIG. **8**, the "Ideal Card" curve is a rectangular load vs displacement curve for a single upwards and downwards stroke cycle of the pump. Also, on FIG. **8**, the "Pump Hitting" curve shows how the motor load spikes at the top of an upwards stroke, and/or the bottom of a downwards stroke. These curves may also be called dynamometer cards. Computer **410** is programmed to recognize each of these operating regimes, and to trigger a warning and/or adjust pump operation based upon these cards. For example, if a "Pump Hitting" curve is recognized in the sensory data, computer **410** will attempt to send a warning to data server **134**, all GUI computers **130**, and all remote management computers **138**. Computer **410** will then adjust the drive command sent to motor driver **124** such that pump **122** is driven with a shorter stroke.

[0037] Programs on single board computer **410** further implement communication protocols for use in interacting on RS-485 transducer interface **435**, the bus interface **326**, or Ethernet **423**. Programs on single board computer also include encryption and compression which are applied to transmissions between control and communication computer system **126** and data server **134** and/or GUI computer **130**. Programs on computer **410** may also implement an FTP and telnet server. The FTP server may be used to receive and transmit files to computer **410**. The telnet server may be used to provide a command terminal for viewing data stored on computer **410** or live from sensory data feeds. The telnet server command terminal may also allow control and communication computer **126**'s control parameters to be set.

[0038] FIG. **5** is a block diagram of power distribution system **128**. Power distribution system **128** receives power from AC mains **129**, and provides power to system **110** via 240/120VAC line **519** and 24VDC line **329**.

[0039] AC mains **129** is a 480 V three phase AC line in this embodiment. Power distribution system **128** includes circuit breaker **521** connected to the three phases of AC mains **129**. In this embodiment, circuit breaker **521** is a 30 amp three phase disconnect circuit breaker. Circuit breaker **521** passes the three phase power through surge suppression unit **522**, which then makes the 480VAC signal available to the rest of pump operation system **110**. Two of the phases from AC mains **129** is provided to two pole circuit breaker **523**. Circuit breaker **523** is a 10 amp breaker. Circuit breaker **523** provides two phase AC power to transformer **524**. Transformer **524** is a 480/240/120 VAC transformer. The outputs of transformer **524** is passed through MOV suppression unit **525** before reaching fuse terminal distribution block **526**. Terminal distribution block **526** provides the connection terminal for several electrical power output circuits, including 240/120 VAC output line **519**, and 24VDC power supply line **329**. The 120VAC line is provided to power converter **531** which converts 120VAC to 24VDC. 24VDC may come directly from 3 ph 480 VAC. The 120VAC line is further used to provide power to lighting **533**, door switch **535**, cooling thermostat **537**, cooling fan **539**, and heat thermostat **541**. The 480 volt surge suppressed line is used to provide power to heat relay **528** and heaters **529**.

[0040] Cooling and heating thermostats **537**, **541**, fan or AC unit **539**, and heaters **529** are used to keep the environment in box **125** within a desired temperature range.

[0041] GUI computer **130** is a computer with a display, keyboard, and a network modem (NIC). The network modem is used to connect GUI computer **130** to the LAN provided by control and communication computer **126**. GUI computer **130** includes software application **131**. Software application **131** provides user **101** an interface for connecting to control and communication computer **126** for the purpose of viewing live and stored sensor data, and for viewing and setting control parameters of control and communication computer **126**. Software application **131** will further provide a graphical geographic view of known pumps, as well as provide basic operation statistics for each of the known pumps. Software application **131** may be a web browser, a telnet client, or, as in this embodiment, a custom software application.

[0042] After user **101** connects GUI computer **130** to control and communication computer **126**'s LAN, user **101** then starts application **131**. Application **131** queries user **101** for a username and password, which are then provided to control and communication computer **126** for authentication. After authentication, application **131** provides user **101** several options. User **101** may select an option to view the current sensory data of pump control system **110**. This causes application **131** to request a data stream from control and communication computer **126**. Each of the raw sensor signals collected by control and communication computer **126** are forwarded to application **131** including motor output force, motor position, motor temperature, pump inlet and outlet pressure, inlet temperature, pump inclination, motor driver state, motor driver output current, power distribution system state and temperature, and power distribution system output voltage and current. This data is constantly streamed from control computer **126** to application **131**, and is ideally updated on the GUI computer display in realtime. Application **131** may process the received data and may place the data into a graphical display. For example, the pump displacement and motor force output may be plotted in y vs x fashion in order to display data in the same format as the dyna card plots in FIG. **7** and FIG. **8**.

[0043] User **101** may also select to view historical sensory data saved by control computer **126**. For example, application **131** may request from control computer **126** the sensory data from the last **1000** pump cycles. Upon receiving this data, application **131** may display this data in the form a plots with a time axis. For example, pump displacement vs motor force output could be plot as a 3D plot with a third axis for time (or pump cycle number). A color code can be applied to show a transition in the wear of the system, such as green for a "new" motor/pump to "red" which would indicate high wear and actual damage resulting in failure, thus requiring replacement. Further, the data viewed may be time averaged data based upon some time period. For example, each data point may be the average for a given data. More specifically, if user **101** is viewing the inlet temperature, application **131** may calculate and plot the average temperature for each day, such that the average temperature over a given day produces a single data point, and all the datapoints over a given time period are plotted with the day as the x axis variable and temperature as the y axis variable. Further, software application **131** may be used to display a warning to user **101** which is generated by a program running on control computer **126**. For example, if a program on control computer **126** recognizes that the motor force vs. pump displacement data produces a curve similar to one of the error conditions shown in FIG. **7** or **8**, a descriptive warning may be flashed on GUI computer **130**'s display.

[0044] Software application **131** may also be used to adjust the operating parameters of control computer **126**. For example, after viewing sensory data, user **101** may decide that the pump should be operating at a decreased frequency. Application **131** provides user **101** with a command interface in order to set a new operating frequency. More specifically, application **131** allows user **101** to specify the exact movement profile that pump system **122** is to be driven at. The movement profile may be a distance vs time curve, or a force vs time curve for a given operation cycle of the pump.

[0045] Application **131** may further allow user **101** to program the operating function that control computer **126** is to follow based upon sensory data. For example, user **101** may program control computer **126** to set the pump frequency to be equal to the inlet pressure times a constant. Other, more complex functions may be used to define the movement profile that control computer **126** is to command motor driver **124** based upon a whole range of sensory input conditions. For example, control computer **126** may be programmed to automatically adjust the movement profile based upon predefined conditions, such as the operating regimes defined in FIGS. **7** and **8**. The movement profile may be different for a downstroke and upstroke, and may vary the frequency in realtime. User **101** may further set thresholds for defining when warnings should be generated by control computer **126**.

[0046] Data server **134** provides the functionality of GUI computer **130** to many potential remote users **102**, as well as acts as a data storage and backup facility. Data server **134** also acts as a mechanism to provide periodic data to control and communication computer **126** which may affect the operating function of control computer **126**.

[0047] All of the functionality provided by application **131** is also available through web application **136** running on data server **134**. However, due to the higher latency expected between data server **134** and control computer **126**, some of the real-time functionality may not be available. Web application is designed to act as a server core a client remote management computer **138**. A user **102** may connect to web application **136** by using a standard web browser on remote management computer **138**. In addition to be able to view the data stored on control computer **126**, web application **136** provides the ability to view data stored on data server **134**.

[0048] It may be advantageous to back up sensory data logs from control computer **126** to data server **134**. For example, control computer **126** may send daily data logs to data server **134**. This allows redundant data to be deleted from control and communication computer **126**, such that a smaller data storage may be implemented on control computer **126**. Also, by having the sensory data stored on data server **134**, historical data may be provided to multiple remote users over a faster and cheaper network link then would be possible if each remote user had to connect to the control and communication computer **126** themselves (i.e. satcom is typically slower and more costly than generic internet access). Also, by having data server **134** provide data to remote users **102**, the processing demand on control computer **126** is reduced.

[0049] Data server **134** may also be used to provide periodic data to control computer **126** which is relevant to the method of pump operation. For example, the international oil price may be obtained by data server **134** and provided to control computer **126**. Control computer **126** may use the oil price as a variable in determining the operating parameters. For example, if the oil price is low, it may be more appropriate to operate the pump at a lower frequency to provide higher efficiency and less wear. However, if the oil prices has significantly increased, it may be advantageous to increase pump frequency in order to capitalize on selling more oil at the high price even at the cost of having increased pump wear. Many other variables may be periodically provided by data server **134** to control computer **126** such as electricity cost, weather conditions, predicted demand, shipping delays, maintenance schedules, and/or pipeline downtime schedules. Each of these variables would be appropriately incorporated into the operating algorithm on control computer **126**.

[0050] The disclosed system and methods resulted in a number os surprising results and advantages. The disclosed system and methods allow for a health and usage monitoring system that is predictive and proactive instead of reactive in nature. Advanced warning can be given to technicians such that they can proactively take measures to correct the motor or pump performance before the motor or pump fails. This can save millions of dollars in maintenance costs and support.

[0051] This system can also measure and track trends such as rate of pump wear or variance in current vs. pressure to determine health and life of the system and predict maintenance intervals. The color coded scheme of displaying dyna card data, combined with the 3D representation of the data allows operators and technicians to quickly and easily see where/when a particular system entered into a failure state, or whether the system is in a high wear or low wear state. Further, this system allows greater accuracy in determining down-hole conditions and provides a greater degree of automated control than is available in prior art systems.

[0052] The disclosed system provides for remote monitoring and control via various redundant communications channels including internet, wifi, cellular data and/or satcom. Further, a GPS system embedded in the control system will automatically locate and map the well for a remote management system.

[0053] Therefore, while the presently-preferred form of the down-hole pump control system has been shown and described, and several modifications discussed, persons skilled in this art will readily appreciate that various additional changes may be made without departing from the scope of the invention.

1. A downhole linear motor pump system comprising:

a downhole linear electric motor having a stator and a shaft configured to move linearly relative to said stator;

a downhole pump having an inlet, an outlet, and a piston coupled to said downhole linear motor shaft;

a motor driver system connected with said downhole linear motor and configured to provide drive commands to said downhole linear motor;

a surface control computer connected with said motor drive system and configured to control said downhole linear motor;

a sensor system communicating with said control computer and configured to sense operating parameters of said downhole linear motor; and

said sensor system comprising a downhole synchronous serial interface encoder configured to sense position of said motor shaft and a downhole temperature sensor configured to sense the temperature of said motor.

2. The system set forth in claim **1**, wherein said sensor system further comprises a pump inlet pressure sensor and a pump inlet temperature sensor.

3. The system set forth in claim **1**, wherein said sensor system further comprises a current sensor configured to sense

motor driver output current and said control computer is programmed to determine motor output force from said motor driver output current.

4. The system set forth in claim **3**, wherein said control computer is programmed to provide an output command as a function of one or more of said operating parameters from said sensor system.

5. The system set forth in claim **4**, wherein said output command is a function of motor shaft position and motor output force.

6. The system set forth in claim **1**, wherein said sensor system further comprises a downhole inclinometer configured and arranged to sense the inclination of said motor shaft

7. The system set forth in claim **1**, and further comprising a surface power distribution system configured and arranged to provide power to said control computer and said downhole linear motor, and wherein said power distribution system and said surface control computer are contained in an environmentally protected cabinet.

8. The system set forth in claim **7**, wherein said sensor system provides power distribution system input voltage and power distribution system input current.

9. The system set forth in claim **8**, wherein said control computer is programmed to determine pump efficiency from said power distribution system input voltage and power distribution system input current.

10. A downhole linear motor pump system comprising:

a downhole linear electric motor having a stator and a shaft configured to move linearly relative to said stator;

a downhole pump having an inlet, an outlet, and a piston coupled to said downhole linear motor shaft;

a motor driver system connected with said downhole linear motor and configured to provide drive commands to said downhole linear motor;

a surface control computer connected with said motor drive system and configured to control said downhole linear motor;

a sensor system communicating with said control computer and configured to sense operating parameters of said downhole linear motor;

said sensor system comprising a downhole position sensor configured to sense position of said motor shaft, a downhole pump inlet pressure sensor, and a current sensor configured to sense motor driver output current; and

said control computer programmed to determine motor output force from said motor driver output current.

11. The system set forth in claim **10**, wherein said control computer is programmed to provide an output command as a function of one or more of said operating parameters from said sensor system.

12. The system set forth in claim **11**, wherein said output command is a motor drive command.

13. The system set forth in claim **12**, wherein said motor drive command is a function of a change in pressure sensed by said pump inlet pressure sensor.

14. The system set forth in claim **11**, wherein said output command is a diagnostic indication of system wear or malfunction.

15. The system set forth in claim **14**, wherein said control computer is programmed to generate one or more pump displacement versus motor output force operating profiles based on said motor shaft position and said motor driver output current.

16. The system set forth in claim **15**, wherein said control computer is programmed to recognize one or more pump displacement versus motor output force reference standard operating profiles.

17. The system set forth in claim **16**, wherein said one or more reference standard operating profiles are selected from a group consisting of bent or sticking barrel, worn or sticking barrel, gas compression, severe gas compression or interference, gas locked pump, traveling valve leak or upstroke pump wear, standing valve leak or worn standing valve, combination of leaking standing and traveling valve and gas compression, tubing movement, inoperative pump, pump hitting, fluid friction and drag friction.

18. The system set forth in claim **11**, wherein said output command comprises a motor shaft movement operating profile.

19. The system set forth in claim **18**, wherein said motor shaft movement operating profile comprises position versus time or motor output force versus time.

20. The system set forth in claim **10**, wherein said control computer is programmed to provide a user signal as a function of one or more operating parameters from said sensor system.

21. The system set forth in claim **20**, wherein said user signal is a warning signal or a graphical display.

22. The system set forth in claim **21**, wherein said graphical display comprises a three-dimensional plot.

23. The system set forth in claim **22**, wherein said three-dimensional plot comprises pump displacement versus motor output force versus time or pump cycle.

24. The system set forth in claim **20**, wherein said graphical display comprises a pump displacement versus motor output force operating profile.

25. The system set forth in claim **20**, wherein said sensor system further comprises a pump outlet pressure sensor and said graphical display comprises motor driver output current versus pump outlet pressure.

26. The system set forth in claim **11**, wherein said sensor system further comprises a pump outlet pressure sensor and said output command is a function of pressure sensed by said pump outlet pressure sensor and said motor driver output current.

27. The system set forth in claim **10**, and further comprising a remote computer system in communication with said control computer via the internet.

28. The system set forth in claim **27**, wherein said remote computer system comprises a graphic user interface configured and arranged to allow a user to view data derived from said sensor system and to view and set operating parameters for said control computer.

29. The system set forth in claim **27**, wherein said remote computer system comprises a data server and said data server comprises a database for storing data from said control computer.

30. The system set forth in claim **10**, wherein said control computer comprises a memory unit.

* * * * *