US007263270B1

(12) United States Patent
Lapstun et al.

(10) Patent No.: US 7,263,270 B1
(45) Date of Patent: Aug. 28, 2007

(54) **VIDEO PLAYER WITH CODE SENSOR**

(75) Inventors: **Paul Lapstun**, Rodd Point (AU); **Kia Silverbrook**, Balmain (AU)

(73) Assignee: **Silverbrook Research Pty Ltd**, Balmain, New South Wales (AU)

(*) Notice: Subject to any disclaimer, the term of this patent is extended or adjusted under 35 U.S.C. 154(b) by 1156 days.

(21) Appl. No.: **09/722,141**

(22) Filed: **Nov. 25, 2000**

(30) **Foreign Application Priority Data**

Dec. 1, 1999 (AU) PQ4392

(51) **Int. Cl.**
H04N 5/91 (2006.01)

(52) **U.S. Cl.** **386/46**; 386/83; 386/125

(58) **Field of Classification Search** 386/45, 386/69–70, 125, 126, 83; 725/86–104; *H04N 5/783, H04N 5/781, 1/173*
See application file for complete search history.

(56) **References Cited**

U.S. PATENT DOCUMENTS

4,864,618	A	9/1989	Wright et al.	
5,051,736	A	9/1991	Bennett et al.	
5,418,622	A *	5/1995	Takeuchi	386/96
5,452,097	A *	9/1995	Koga et al.	386/106
5,477,012	A	12/1995	Sekendur	
5,541,738	A *	7/1996	Mankovitz	386/83
5,652,412	A	7/1997	Lazzouni et al.	
5,661,506	A	8/1997	Lazzouni et al.	
5,692,073	A	11/1997	Cass	
5,852,434	A	12/1998	Sekendur	
6,076,734	A	6/2000	Dougherty et al.	
6,097,441	A *	8/2000	Allport	348/552
6,104,334	A *	8/2000	Allport	341/175
6,137,950	A *	10/2000	Yuen	386/83
6,407,779	B1 *	6/2002	Herz	348/734
6,437,836	B1 *	8/2002	Huang et al.	348/734
6,759,967	B1 *	7/2004	Staller	340/825.72
6,781,635	B1 *	8/2004	Takeda	348/552
6,964,374	B1	11/2005	Djuknic et al.	
2004/0093352	A1 *	5/2004	Matsumoto	707/104.1
2004/0168187	A1 *	8/2004	Chang	725/40
2004/0226042	A1 *	11/2004	Ellis	725/43

FOREIGN PATENT DOCUMENTS

EP	0697793 A	2/1996
EP	0856812 A	8/1998
EP	969390	1/2000
GB	2 306 669	5/1997

(Continued)

OTHER PUBLICATIONS

Dymetman, M., and Copperman, M., Intelligent Paper; in Electronic Publishing, Artistic Imaging, and Digital Typography, Proceedings of EP '98, Mar./Apr. 1998, Springer Verlag LNCS 1375, pp. 392-406.

Primary Examiner—Robert Chevalier

(57) **ABSTRACT**

A video player (**100**) including at least one sensor (**112**) for sensing coded data (**202**) on or in a substrate and for generating first data, a transmitter (**188**) for transmitting said first data or second data at least partially based on the first data to a computer system and a receiver (**188**) for receiving video data associated with an identity derived from the first data from the computer system and at least one display device (**102**) for outputting a visual display based at least partially on the video data.

18 Claims, 12 Drawing Sheets

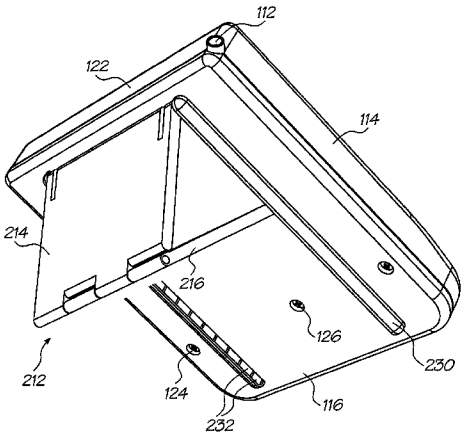

FOREIGN PATENT DOCUMENTS

JP	40252154 A	*	10/1990
WO	WO95/17794		6/1995
WO	WO99/18487		4/1999
WO	WO99/45521 A		9/1999
WO	WO99/50787		10/1999

* cited by examiner

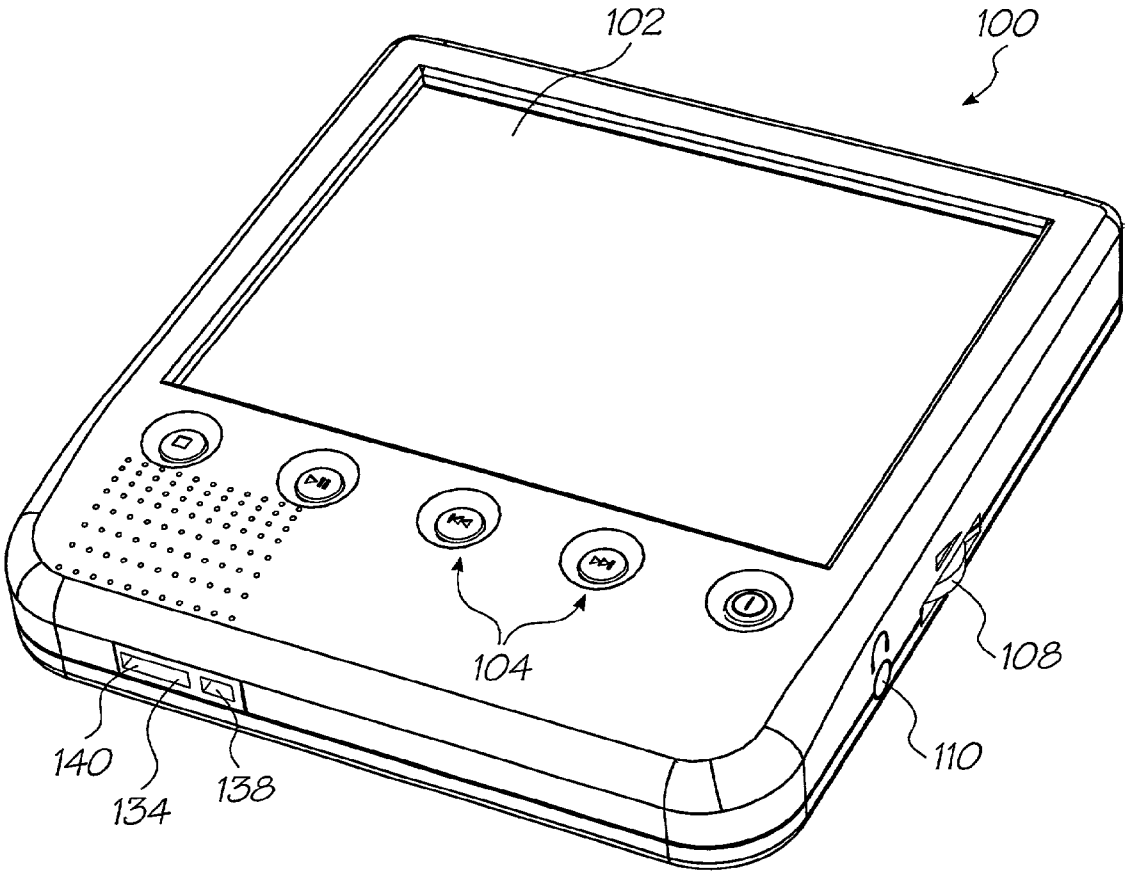

FIG. 1

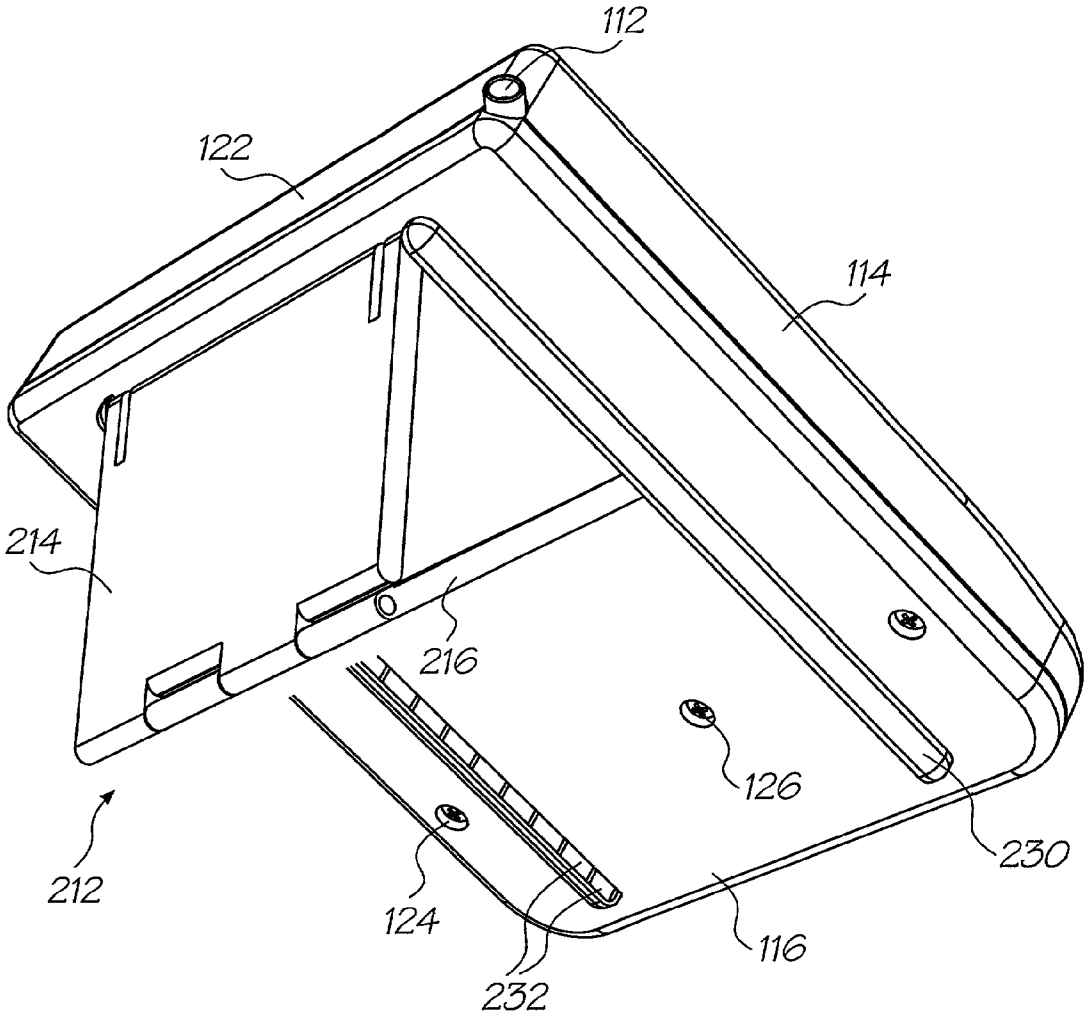

FIG. 2

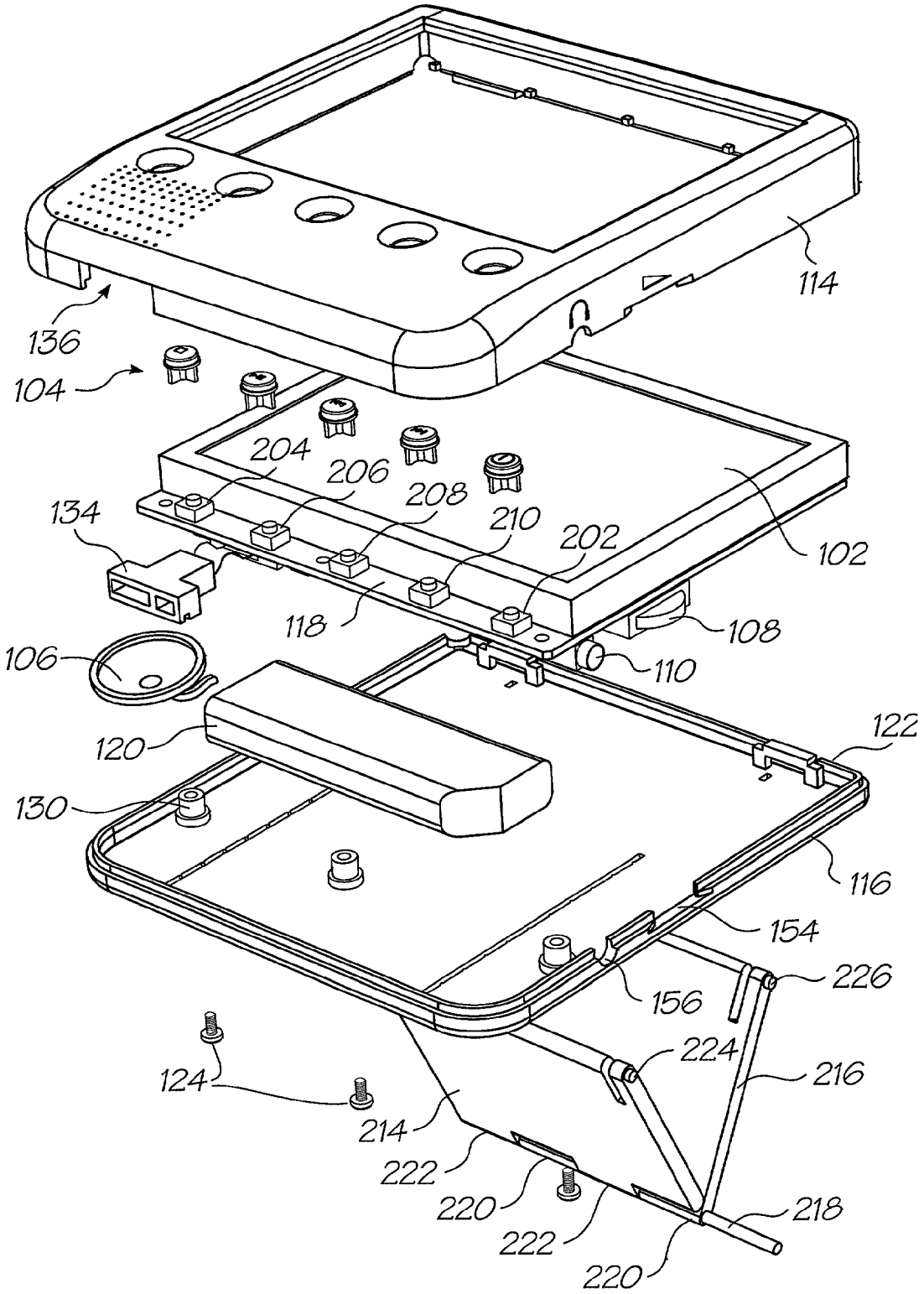
114
136
104
204
206
208
210
202
102
134
118
108
106
110
120
122
130
116
154
226
156
224
216
124
214
222
220
218
222
220

FIG. 3

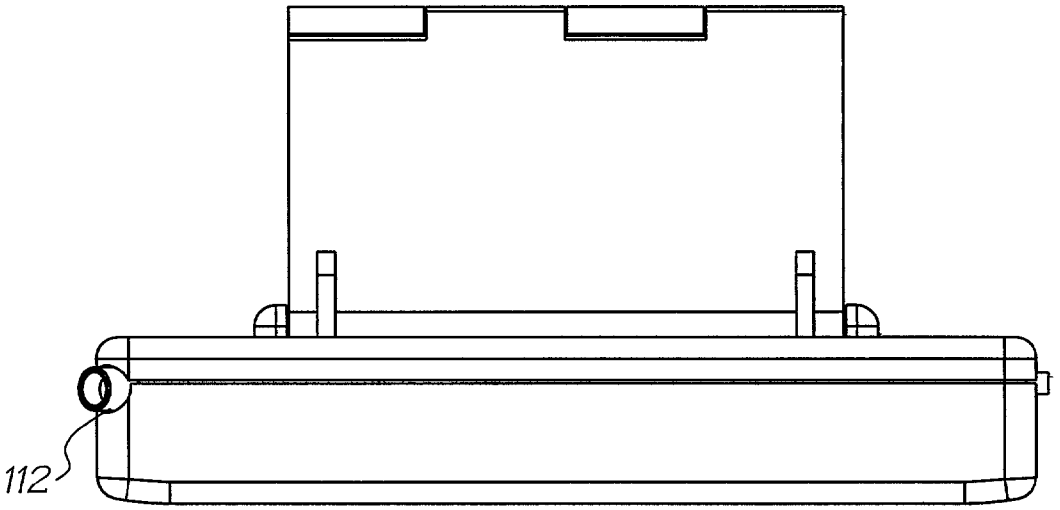

FIG. 4

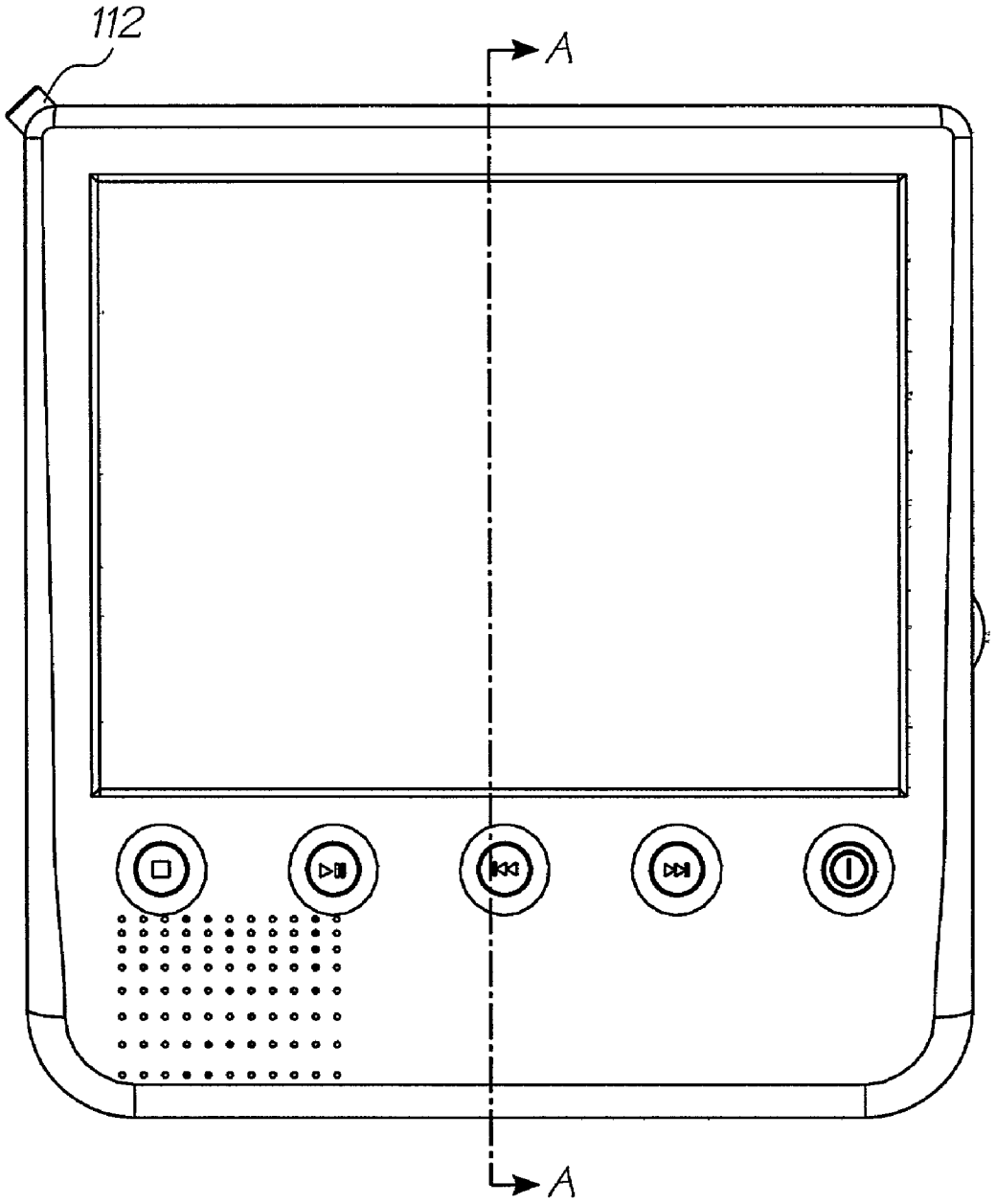

FIG. 5

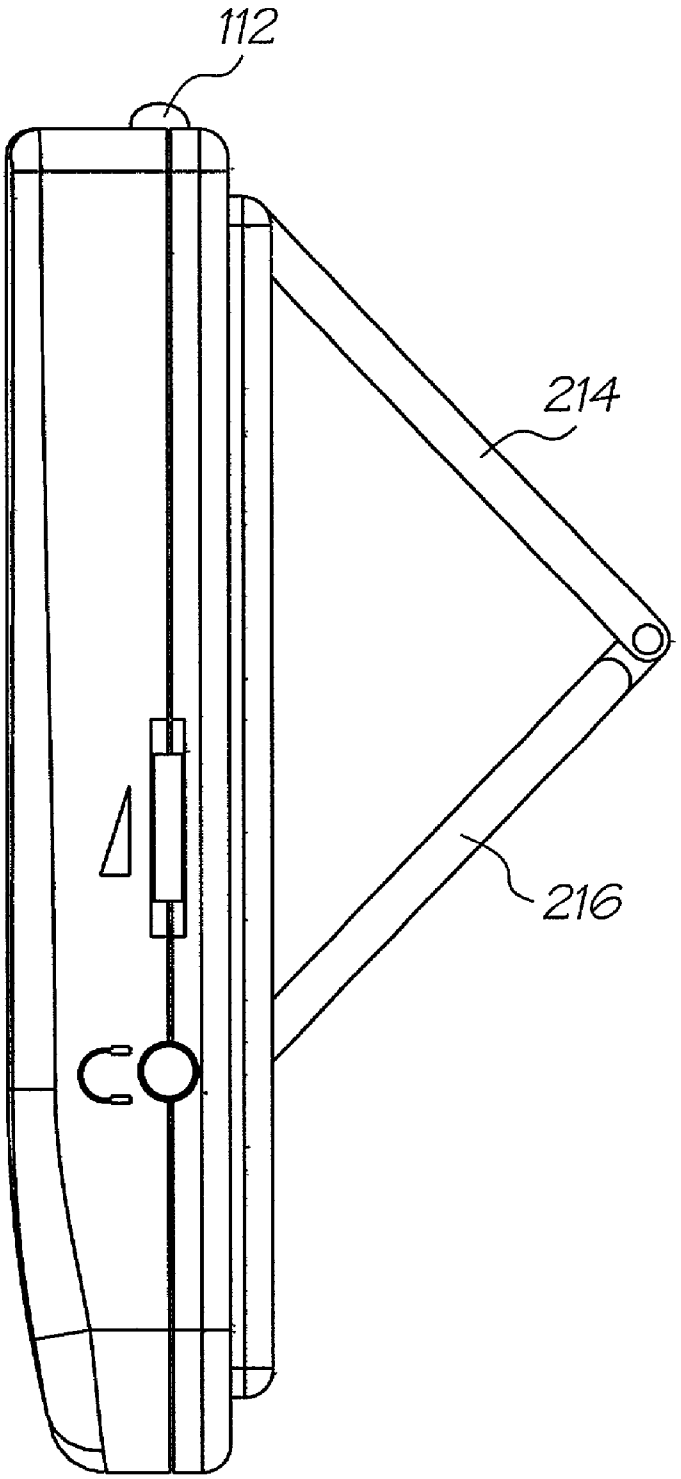

FIG. 6

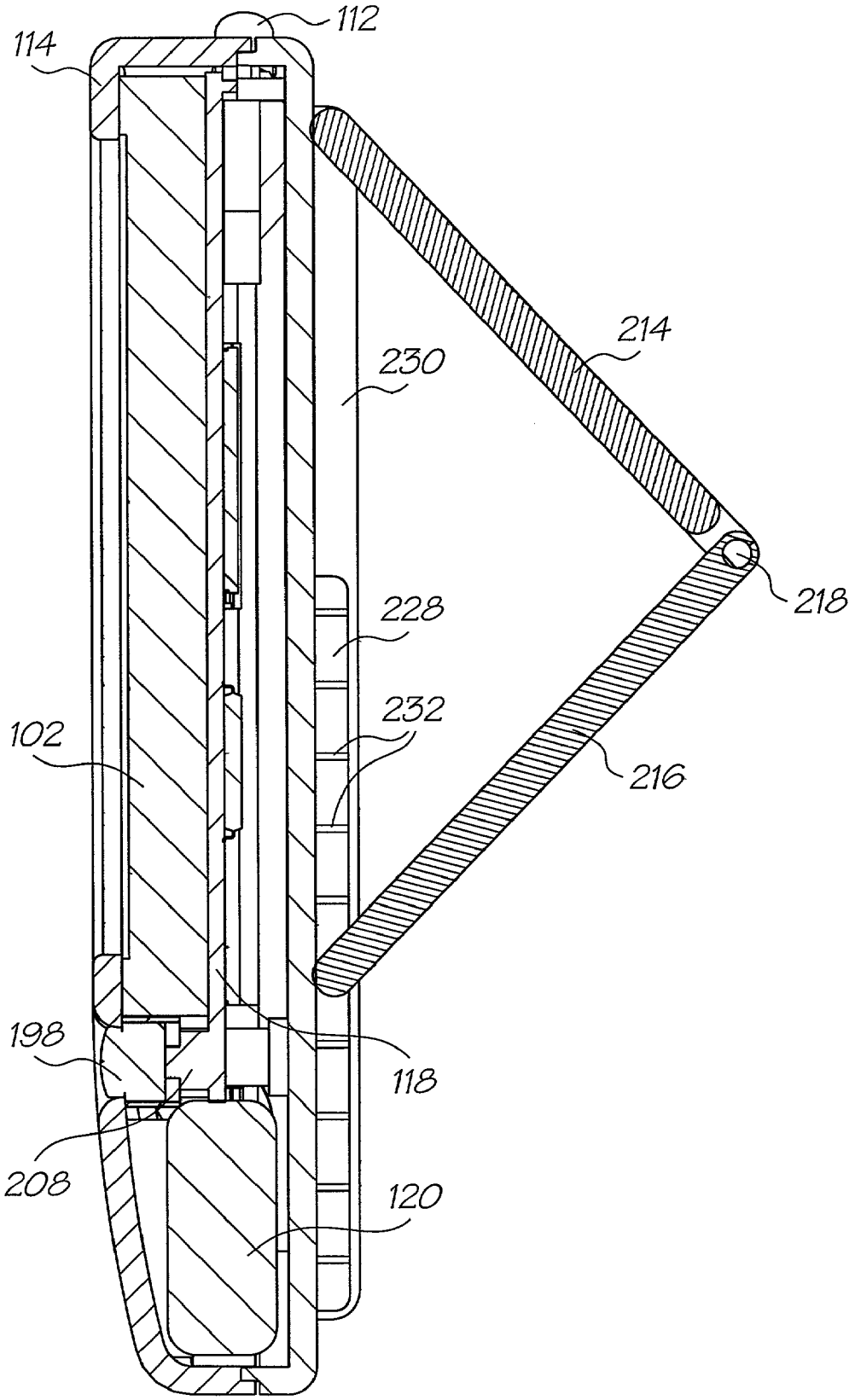

FIG. 7

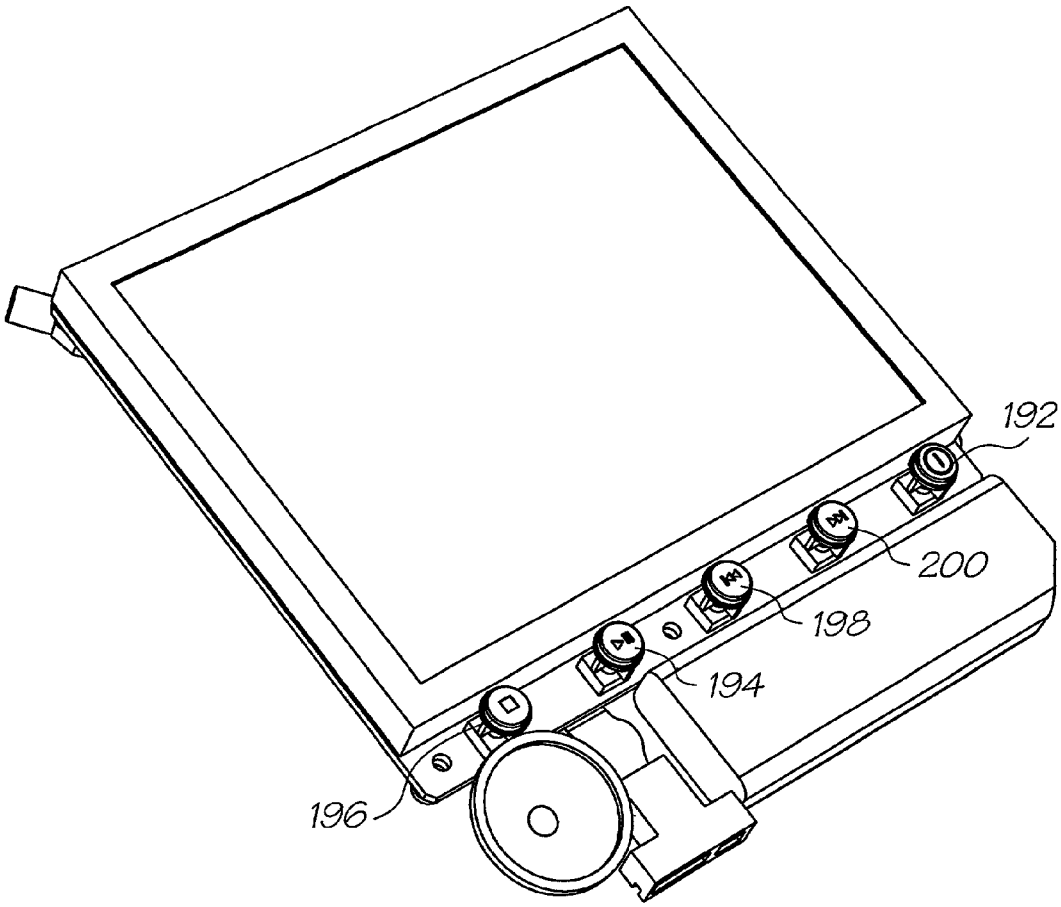

FIG. 8

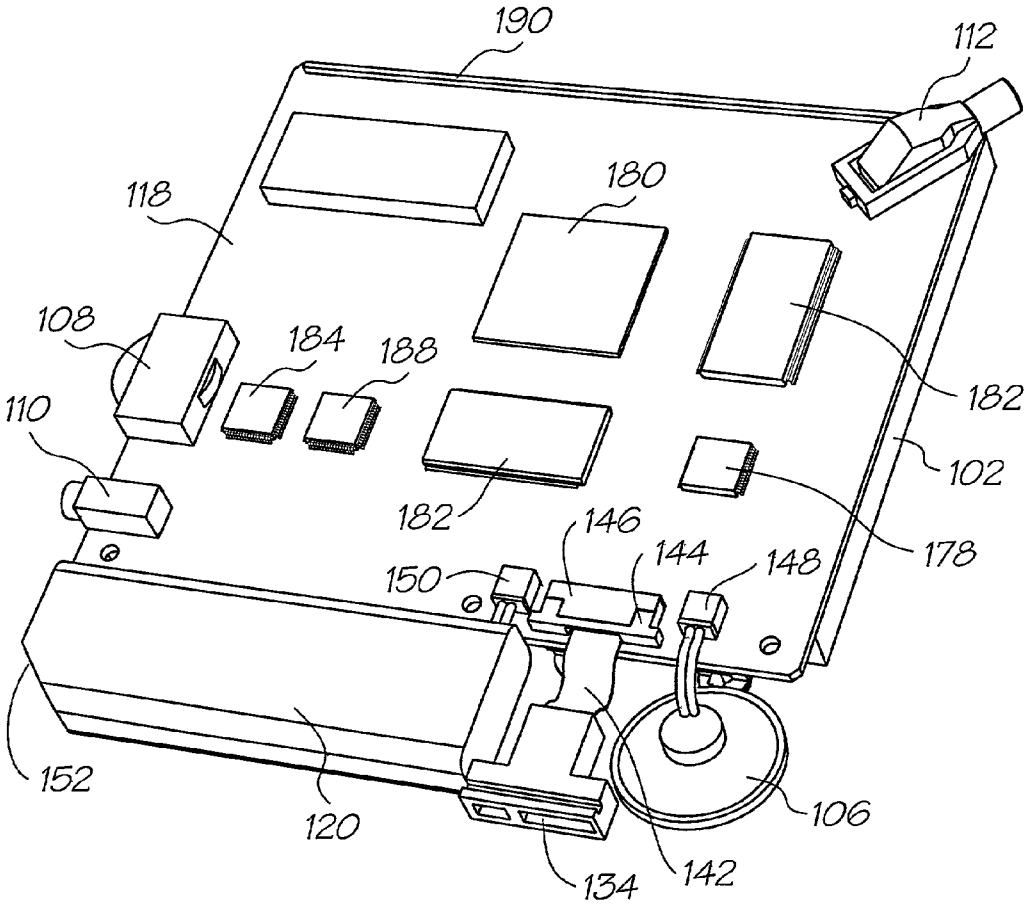
190
112
118
180
108
184
188
182
110
102
182
146
144
148
178
150
152
120
106
134
142

FIG. 9

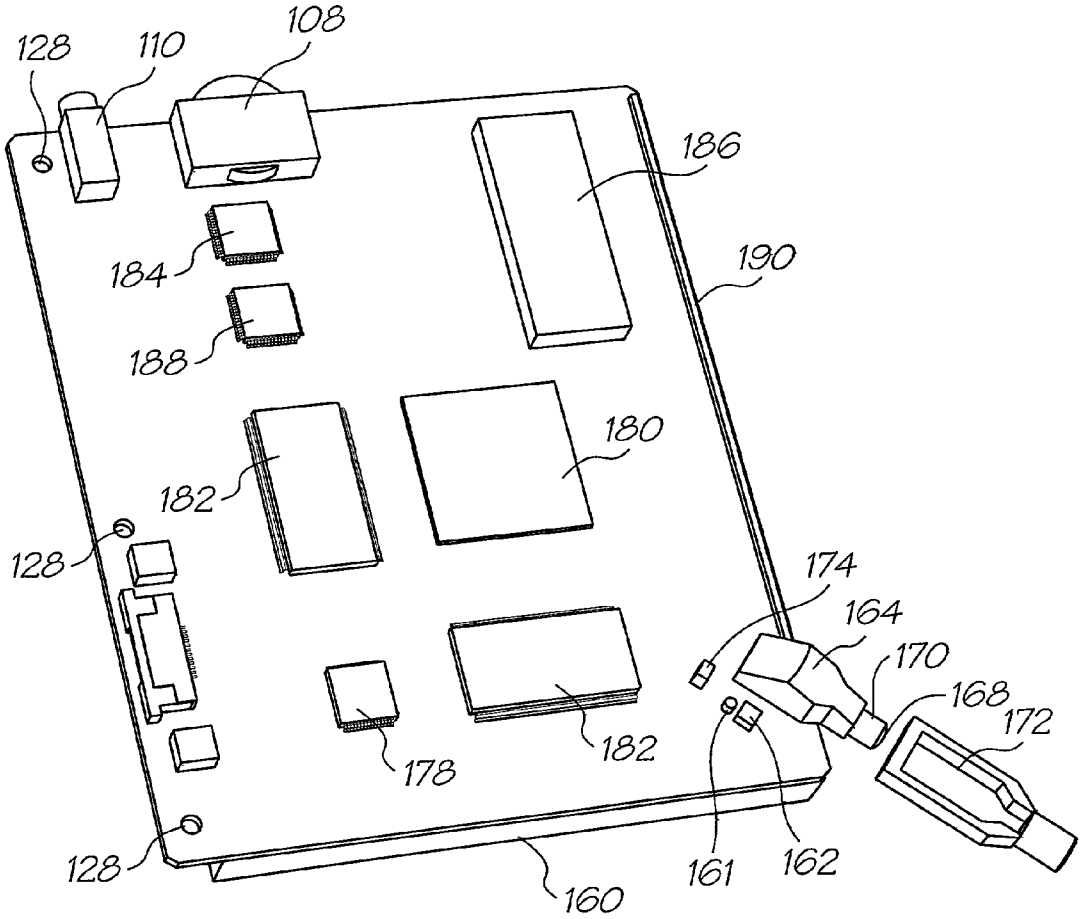
128
110
108
186
184
190
188
180
182
128
174
164
170
168
172
178
182
128
161
162
160

FIG. 10

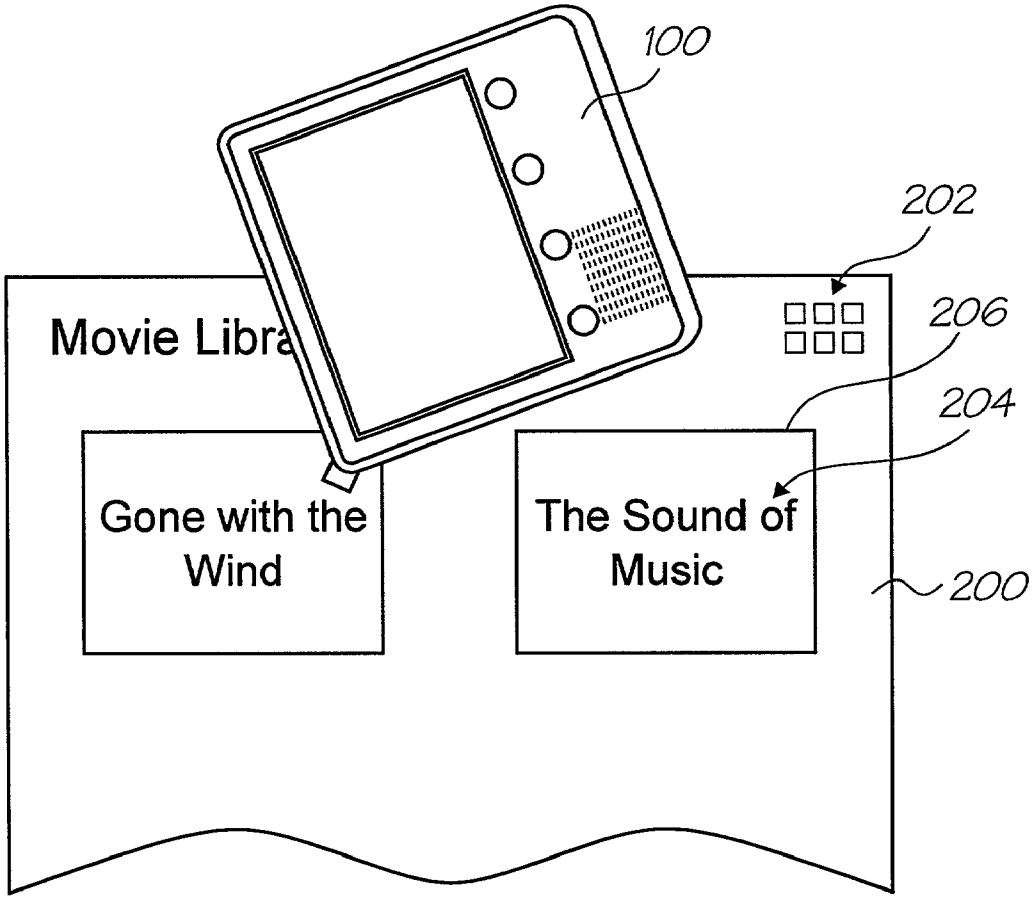
100
202
206
204
Movie Libra
Gone with the Wind
The Sound of Music
200

FIG. 11

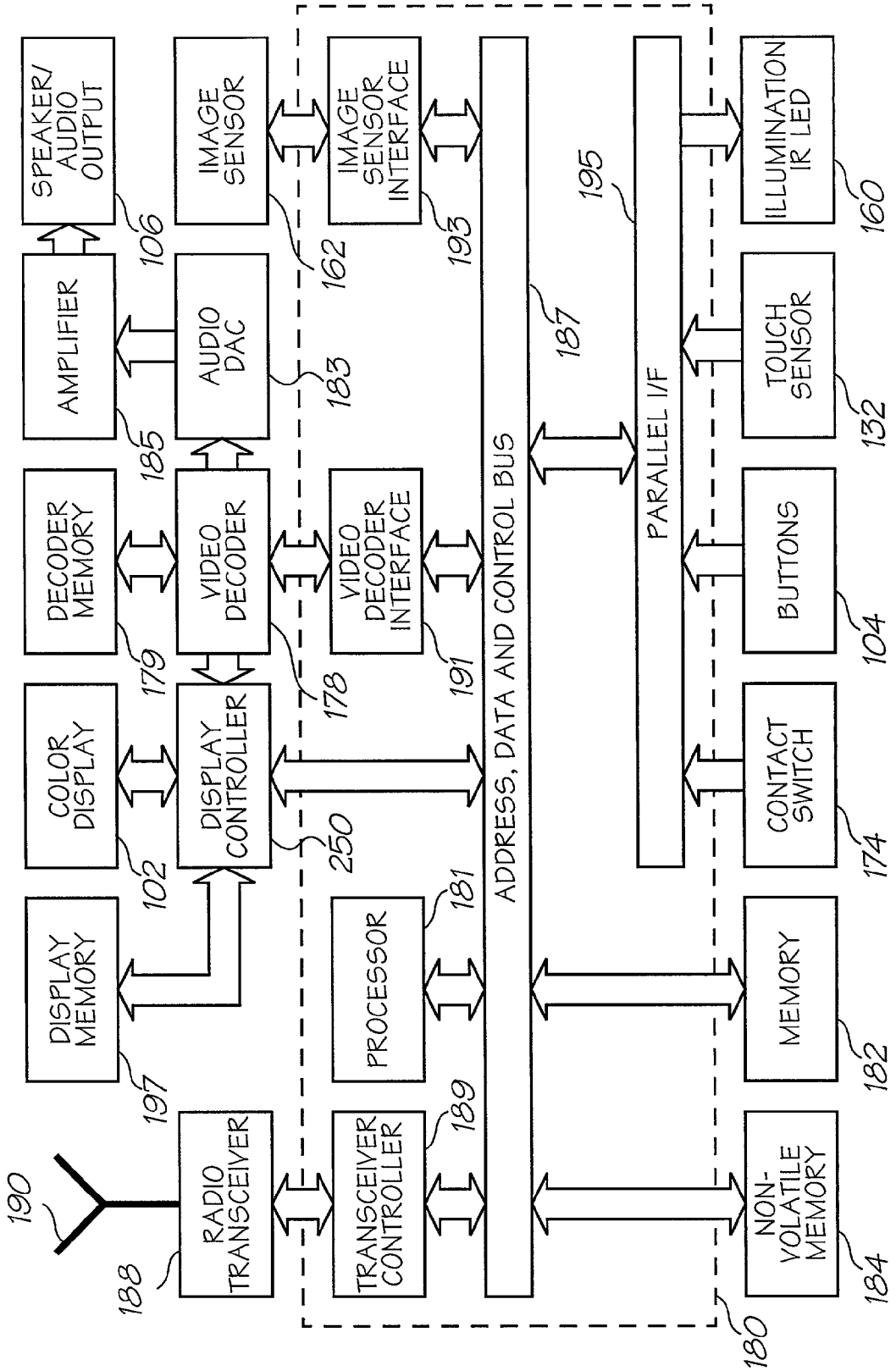
SPEAKER/ AUDIO OUTPUT
106
AMPLIFIER
185
DECODER MEMORY
179
COLOR DISPLAY
102
DISPLAY MEMORY
197
190
188
RADIO TRANSCEIVER
IMAGE SENSOR
162
AUDIO DAC
183
VIDEO DECODER
178
DISPLAY CONTROLLER
250
PROCESSOR
181
TRANSCEIVER CONTROLLER
189
IMAGE SENSOR INTERFACE
193
VIDEO DECODER INTERFACE
191
ADDRESS, DATA AND CONTROL BUS
187
PARALLEL I/F
195
ILLUMINATION IR LED
160
TOUCH SENSOR
132
BUTTONS
104
CONTACT SWITCH
174
MEMORY
182
NON-VOLATILE MEMORY
184
180

FIG. 12

VIDEO PLAYER WITH CODE SENSOR

FIELD OF INVENTION

The present invention relates to devices for receiving machine-readable input and for outputting a human discernable output, usually in the form of audio or visual information. More particularly the invention relates to an video player which may be used to scan or sense machine-readable coded data on a surface and to output a still image, a video clip or audio material, or both audio and visual material.

COPENDING APPLICATIONS

Various methods, systems and apparatus relating to the present invention are disclosed in the following co-pending applications/granted patents filed by the applicant or assignee of the present invention with the present invention:

U.S. Pat. Nos. 6,530,339, 6,631,897, Ser. Nos. 09/722,174, 09/722,174, 09/721,896, U.S. Pat. Nos. 7,064,851, 6,826,547, 6,741,871, 6,927,871, 6,980,306, 6,965,439, 6,788,982, Ser. No. 09/722,141, U.S. Pat. Nos. 6,788,293, 6,946,672, 7,091,960, 6,792,165, 7,105,753, Ser. No. 09/721,862.

The disclosures of these co-pending applications are incorporated herein by cross-reference.

Various methods, systems and apparatus relating to the present invention are disclosed in the following co-pending applications fled by the applicant or assignee of the present invention on 20 Oct. 2000:

Ser. No. 09/693,415, U.S. Pat. Nos. 7,110,126, 6,813,558, 6,965,454, 6,847,883, 7,131,058, Ser. No. 09/693,690, U.S. Pat. Nos. 6,982,798, 6,474,888, 6,627,870, 6,724,374, Ser. No. 09/693,514, U.S. Pat. Nos 6,454,482, 6,808,330, 6,527,365, 6,474,773, 6,550,997.

The disclosures of these co-pending applications are incorporated herein by cross-reference.

Various methods, systems and apparatus relating to the present invention are disclosed in the following co-pending applications filed by the applicant or assignee of the present invention on 15 Sep. 2000:

U.S. Pat. Nos. 6,679,420, 6,963,845, 6,995,859, 6,720,985.

The disclosure of these co-pending applications are incorporated herein by cross-reference.

Various methods, systems and apparatus relating to the present invention are disclosed in the following co-pending applications filed by the applicant or assignee of the present invention on 30 Jun. 2000:

U.S. Pat. Nos. 6,824,044, 6,678,499, 6,976,220, 6,976,035, 6,766,942, Ser. No. 09/609,303, U.S. Pat. Nos. 6,922,779, 6,978,019, Ser. No. 09/607,843, U.S. Pat. No. 6,959,298, 6,973,450, Ser. No. 09/609,553, U.S. Pat. No. 6,965,882, Ser. No. 09/608,022, U.S. Pat. Nos. 7,007,851, 6,957,921, 6,457,883, 6,831,682, 6,977,751, 6,398,332, 6,394,573, 6,662,923.

The disclosures of these co-pending applications are incorporated herein by cross-reface.

Various methods, systems and apparatus relating to the present invention are disclosed in the following co-pending applications filed by the applicant or assignee of the present invention on 23 May 2000: U.S. Pat. Nos. 6,428,133, 6,526,658, 6,315,399, 6,338,548, 6,540,319, 6,328,431, 6,328,425, 6,991,320, 6,383,833, 6,464,332, 6,390,591, 7,018,016, 6,328,417, Ser. No. 09/575,197, U.S. Pat. No. 7,079,712, Ser. No. 09/575,123, U.S. Pat. No. 6,825,945, Ser. No. 09/575,165, U.S. Pat. Nos. 6,813,039, 6,987,506, 7,038,797, 6,980,318, 6,816,274, 7,102,772, Ser. No. 09/575,186, U.S. Pat. Nos. 6,681,045, 6,728,000, Ser. No. 09/575,145, U.S. Pat. No. 7,088,459, Ser. No. 09/575,181, U.S. Pat. Nos. 7,068,382, 7,062,651, 6,789,194, 6,789,191, 6,644,642, 6,502,614, 6,622,999, 6,669,385, 6,549,935, 6,987,573, 6,727,996, 6,591,884, 6,429,706, 6,760,119, Ser. No. 09/575,198, U.S. Pat. No. 6,290,349, 6,428,155, 6,785,016, 6,870,966, 6,822,639, 6,737,591, 7,055,729, Ser. No. 09/575,129, U.S. Pat. Nos. 6,830,196, 6,832,717, 6,957,768, Ser. Nos. 09/575,162, 09/575,172, 09/575,170, U.S. Pat. Nos. 7,123,239, 6,409,323, 6,281,912, 6,604,810, 6,318,920, 6,488,422, 6,795,215, Ser. No. 09/575,109, U.S. Pat. No. 6,859,289.

The disclosures of these co-pending applications are incorporated here by cross-reference.

BACKGROUND

Purpose-specific devices such as televisions, video cassette player/recorders and camcorders, as well as more general-purpose devices such as personal computers, can be used to play back video material such as movies. Many of these devices can also be used to record video material, such as home movies.

In general, these devices don't provide access to situated video, e.g. to a video clip associated with a concert poster encountered at a train station, or a demonstration video associated with a page in a workshop manual. Each device must be used to seek out the desired video material through a virtual space accessible through the device, or the video material must be brought to the device in a device-compatible physical format.

The present invention utilizes methods, systems and devices related to a system referred to as "netpage", described in our co-pending applications listed above, wherein invisible coded data is disposed on various surfaces to render the surfaces interactive in the manner of graphical user interfaces to computer systems.

SUMMARY OF INVENTION

In one broad form the invention provides a hand-held video player with one or more sensors capable of sensing images including coded data. Images including coded data are sensed by the viewer and decoded. The decoded information is transmitted to a computer system which associates the decoded data with video data stored on the system, using previously stored association data. The data is transmitted to the viewer and to the user on a display screen.

Accordingly, in one broad form, the invention provides a video player including:

at least one sensor for sensing coded data on or in a substrate and for generating first data;

a transmitter for transmitting said first data or second data at least partially based on the first data to a computer system;

a receiver for receiving video data associated with an identity derived from the first data from the computer system;

at least one display device for outputting an visual display based at least partially on the video data.

The player preferably includes a touch screen and the visual output includes interactive elements by which the user may modify the visual output by interaction with the touch screen.

The player may also include memory into which a file or files are downloaded for subsequent viewing.

A video player according to one embodiment of the present invention is a compact device which, when used to click a video clip object or hyperlink on a page including machine readable code, plays back the associated video clip. It contains a sensor for reading the machine readable code, a transceiver for communicating with a base station, a compressed video and audio decoder, a color display, a display controller, an audio digital-to-analog converter, a small audio amplifier, a speaker, a stereo headphone socket, a volume control potentiometer, and a controlling processor. It also typically contains playback controls such as stop, play/pause, skip back, skip forward, although these may alternatively be provided in printed form on a coded substrate. Video clip information, such as title, chapter number, playing time, and pause status, is shown transiently on the color display, superimposed on the video.

When the user touches the video player to a video clip object or hyperlink on a coded page, the player senses the page via its page sensor, and decodes the link in the usual way via the base station. It then streams the video from the page network via the base station, subject to the user's interaction with the playback controls.

Audio is routed to the speaker, or, if a plug is present in the stereo headphone socket, to the attached headphones or other external audio device. Audio may also be routed to wireless headphones via the transceiver, either directly from the base station or via the player.

The video player may operate out-of-range of a netpage base station if it is configured to utilize an embedded mobile telephone transceiver, or if it is itself embedded in a mobile telephone which it is configured to interoperate with.

BRIEF DESCRIPTION OF DRAWINGS

FIG. **1** is a perspective view from above of video player according to an embodiment of the invention;

FIG. **2** is a perspective view from below of the FIG. **1** player;

FIG. **3** is an exploded perspective view from above of the FIG. **1** player;

FIG. **4** is a side view from the rear of the player of FIG. **1**;

FIG. **5** is a plan view from above of the FIG. **1** player;

FIG. **6** is a side view from the right of the FIG. **1** player;

FIG. **7** is a cross-sectional view taken along line AA of FIG. **5**;

FIG. **8** is a perspective view from above of the internal components of the FIG. **1** player;

FIG. **9** is a perspective view from below of the internal components of the FIG. **1** player;

FIG. **10** is an exploded perspective view of the underside of the PCB of the FIG. **1** player;

FIG. **11** is a perspective view showing the FIG. **1** player in use on a coded substrate; and

FIG. **12** is a block diagram of the electronics of the player.

DETAILED DESCRIPTION OF PREFERRED AND OTHER EMBODIMENTS

Referring to the drawings, there is shown a display unit **100**. The display unit has a color LCD screen **102**, five control buttons **104**, a speaker **106**, volume control **108**, an audio out jack **110** and a infrared sensor device **112**.

The body of the player is formed of upper and lower moldings **114** and **116** respectively which encapsulate a PCB **118** and all of the electronic components are mounted on or connected to this PCB. Power for the player is supplied by a rechargeable 3 volt lithium ion battery **120**. The battery is not user replaceable and is located within the body. The two moldings **114** and **116** clip together at the upper edge **122** and are held together by three screws **124** extending through apertures **126** in the lower molding to engage in threaded studs (not shown) in the upper molding **114**. The screws pass through holes **128** in the PCB and sandwich the PBC between lower bosses **130** formed in the lower molding **116** and the studs in the upper molding **114**.

The LCD screen **102** is mounted on the top of the PCB and is preferably a full color thin film transistor type display, or a display having similar or better contrast and switching speeds; such displays allow video to be played at acceptable qualities. The video player may include a touch screen overlay **132**.

A combined data and power connector **134** is connected to the PCB and is accessible via opening **136** in the body. The connector **134** includes a power input socket **138** for recharging of the battery **120** and a data socket **140** for input/output of data to and from the player. The connector **134** is connected to the PCB via a flexible PCB **142** and connectors **144** and **146**.

The speaker **106** is also connected to the PCB at its lower edge via connector **148** and is positioned between the PCB and the lower edge of the body. The speaker may be hard wired to the PCB rather than being provided with a removable connector. The audio output is used to play audio associated with the video, and optionally to provide operating feedback to the user.

The battery **120** is also positioned between the PCB and the lower edge of the body. A removable connector **150** is provided to connect the battery to the PCB. However, since the battery is not intended to be user replaceable, a permanent connection may be used. The battery is preferably shaped to fit the body and accordingly has a beveled corner **152**.

The volume control **108** and audio out jack **110** are mounted directly on the right hand side of the PCB and are accessible via openings **154** and **156** respectively in the right hand side of the body.

The PCB also includes a compressed audio visual decoder **178**, processor chip **180**, dynamic RAM (DRAM) **182**, flash or ROM **184**, display controller **250** for controlling the LCD, a transceiver chip **188** and an aerial **190**.

Mounted on the lower surface of the PCB, at the top left hand corner, is the sensor device **112** which is capable of detecting infrared markings on a substrate. The sensor device **112** comprises a LED **160** and an image sensor **162**. The image sensor **162** is sensitive to infrared light, either inherently or by use of filters and the LED **160** emits infrared light, again inherently or by use of filters. In use infrared light is emitted from the LED **160** and passed through an light guide **164** and then through an aperture **166** in the body formed by the two casings **114** & **116**. Light passes through the aperture **166**, the optical molding **164** in the lower molding. Light passes through the aperture **166**, the optical molding **164** and is focused onto the image sensor **162**. The optical molding preferably includes a lens **168** and may include a beam splitter/combiner to allow light from and to the LED and the image sensor to follow the same path.

The infrared LED **160** may be strobed in synchrony with image capture to prevent motion-blurring of captured tag images. The image sensor typically consists of a 200×200 pixel CMOS or CCD image sensor with a near-infrared bandpass filter.

The free end portion **170** of the light guide **164** is cylindrical and a force sensor collar **172** is slideably mounted on the cylindrical portion. The collar extends beyond the free end of portion **170** so that when the player is pushed against the surface the collar rather than the lens **168** contacts the surface. The collar has a limited amount of movement so that when pressed against a surface there will be a small gap between the surface and the lens **168**. The lens **168** is designed to have the surface in focus at most orientations of the player to the surface; it will be appreciated that with different contact angles the distance will change and so the depth of field of focus needs to encompass this range.

The collar **172** extends around and behind the sensor device **112** and engages a micro switch **174**. The micro switch is biased to an open position; pushing on the collar against the micro switch **174** overcomes the biasing means in the switch **174** and closes it. When the force is removed the biasing means urges the collar outward and opens the switch again. A separate biasing means may be provided external of the switch **174** in addition to the micro switch's own biasing means. The sensor device is capable of detecting infrared absorptive tags, such as net page tags. For a full description of the electronic processes involved, reference is made to our co-pending application U.S. Ser. No. 09/721,893, now issued U.S. Pat. No. 6,792,165, referred to earlier. The CCD **162**, the LED **160** and processing functions incorporated in the processor chip **180** are similar to those disclosed in the co-pending application.

The player is thus capable of sensing and decoding netpage tags on a substrate. Image data captured by the CCD **162** is sent to the processor chip **180** and decoded to a region ID (or page ID) and a tag ID. The region ID and tag ID, together with other necessary information, is transmitted to the netpage system via the transceiver chip **188** and aerial **190**. The netpage system resolves the region ID and tag ID to corresponding document data which it transmits back to the player. This is received by the processor **180** via the transceiver. The renders the data for display on the LCD **102** via the display controller **250**.

Component digital video for standard-definition television (SDTV) is sampled at **720** active luminance samples and **360** active chrominance (red and blue color difference) samples per line, with about 488 active lines per frame in 525/59.94 systems and **576** active lines per frame in 625/50 systems. 525/59.94 systems have a frame rate of 29.97 Hz, corresponding to an interlaced field rate of 59.94 Hz, while 625/50 systems have a frame rate of 25 Hz, corresponding to an interlaced field rate of 50 Hz. With 8-bit sampling per component, i.e. 16 bits per pixel at the luminance sampling rate, both systems have a data rate of about 21 Mbytes/s. This is somewhat lower than the data rate implied by the 13.5 MHz luminance sample rate, since each line contains inactive samples and each frame contains inactive lines. Component digital video for SDTV is known as 4:2:2, in reference to the ratios of its luminance and chrominance sampling rates to a base frequency of 3.375 MHz.

In 4:2:0 video, chrominance is also subsampled by a factor of two with respect to luminance in the vertical dimension, giving 12 bits per pixel at the luminance sampling rate, and a data rate of about 16 Mbytes/s. 4:2:0 is commonly used in JPEG and MPEG compression, discussed below.

Video is also commonly sampled at, or subsampled to, **360** (**352**) luminance samples per line and 240 lines per frame (in 525/59.94) or 288 lines per frame (in 625/50), particularly in low-rate versions of MPEG and related video compression standards, giving a data rate of about 4.8 Mbytes/s. The MPEG variant is referred to as SIF (Standard Interchange Format), while the International Telecommunications Union's videoconferencing variant is referred to as CIF (Common Intermediate Format). The square-pixel equivalent is normally taken to be 320×240.

For both storage and communications purposes, there is a strong imperative to compress a digital video stream. In the JPEG still image compression standard, blocks of an image are transformed into the frequency domain via a discrete cosine transform (DCT). This has the effect of concentrating image energy in relatively lower-frequency coefficients, allowing higher-frequency coefficients to be more crudely quantized, the principal source of compression in JPEG. At compression ratios at 10:1 and below, JPEG introduces negligible image degradation. In the MPEG video compression standard, periodic reference frames are coded using a scheme similar to JPEG, to support random access. Remaining frames are coded using local block-based motion vectors, with reference to an earlier frame or to an earlier frame and a future frame.

The MPEG-1 compression standard, targeted at the 1.5 Mbit/s data rate of compact discs, is generally credited with achieving the same quality as VHS tapes at a bit rate of 1.2 Mbit/s, when operating at SIF resolution at 30 Hz non-interlaced.

Digital audio is usually sampled at 44.1 kHz, i.e. at twice the 22.05 kHz upper cutoff frequency of the 25th critical band of human hearing. Slightly higher sampling frequencies, such as 48 kHz, are sometimes used because in reality it is impractical to lowpass filter the audio with a sharp cutoff at 22.05 kHz prior to sampling. With typical quantization of 16 bits per channel, a stereo signal therefore generates 1.41 Mbit/s, and this is consequently the data rate of many common digital audio applications, including, for example, the audio compact disc (if error correction overhead is ignored).

Because the typical 1.41 Mbit/s digital audio data rate is non-trivial, there is a strong incentive to also compress the digital audio signal. The most successful digital audio compression schemes have a perceptual basis, i.e. they exploit the frequency-dependence of the threshold of human hearing, and signal-dependent masking, whereby a relatively louder tone can locally raise the threshold curve and thus mask relatively softer adjacent tones. Audio compression also typically relies on traditional compression techniques such as entropy-coding. In multi-channel audio, inter-channel redundancy is also commonly exploited.

The MPEG Audio Layer 3 (MP3) standard uses perceptual coding to achieve 'near-CD' and 'CD' quality reproduction at compression ratios of between 16:1 and 12: 1, i.e. reducing the data rate from 1.41 Mbit/s to between 88 Kbit/s and 118 Kbit/s.

The player includes a dedicated compressed video and audio decoder **178** which produces square-pixel progressive-scan digital video and digital audio output. For example, to handle MPEG-1 encoded video and audio, a video and audio decoder similar to a C-Cube CL**680** decoder may be used. To handle MPEG-2 encoded video and audio, a video and audio decoder similar to C-Cube's ZiVA-3 decoder may be used. An MPEG-1 decoder typically uses a 4 Mbit DRAM during decoding, while an MPEG-2 decoder typically uses a 16 Mbit SRAM during decoding. The decoder memory **179** may be dedicated to the decoder, or may be part of a memory **182** shared with the processor.

Any of a number of other video and audio encoding standards may be supported via suitable video and audio decoders, including RealNetworks' RealVideo.

Digital video decompressed by the decoder is displayed on the color display **102** via a display controller **250**.

Digital audio decompressed by the decoder is converted to analog via a digital-to-analog converter (DAC) **183**, is amplified by an amplifier **185** subject to the volume control, and is output to a speaker **106** or to an external audio device via an audio jack **110**. The speaker **106** is disabled when the audio jack is in use.

The processor chip contains a processor unit **181** which controls and coordinates the various electronic components of the player. The processor unit **181** executes software which monitors, via the tag sensor **162**, the identity of the underlying page and the position of the player relative to the page; communicates the identity and position data to the netpage base station via a wireless transceiver **188**; receives video clip information and streaming audio data from the base station via the transceiver **188**; displays clip information to the status display **102**; decompresses streaming audio data to the audio output via the audio decoder **183**; and interprets user input captured via the user interface buttons **104**. The embedded software executed by the processor is stored in the non-volatile memory **184**, typically in the form of ROM and/or flash memory. Identity information unique to the player, as well as communications encryption keys, are also stored in non-volatile memory. During execution the processor utilizes faster volatile memory, typically in the form of a 64 Mbit (8 Mbyte) dynamic RAM (DRAM).

Assuming a compressed video data rate of 1.2 Mbit/s (e.g. MPEG-1 SIF at 30 Hz), the player's memory **182** can hold about one minute of compressed video (including stereo audio). With higher compression ratios or more memory, correspondingly longer clips can be held. If streaming playback is used by the player, then only a small video buffer is required to eliminate transmission jitter, and a significantly smaller memory may be used.

The processor unit **181** communicates with the other components via a shared bus **187**. The processor unit **181**, the bus **187**, and any number of other components may be integrated into a single chip. As indicated in the block diagram, the integrated components may include the digital transceiver controller **189**, the video decoder interface **191**, and the tag image sensor interface **193**. A parallel interface **195** is interposed between the bus **187** and the buttons **104**, LED **160**, touch sensor **132** and contact switch **174** In a more highly integrated chip, they may also include the video decoder **178**, the audio DAC **183**, the tag image sensor **162**, and the memory **182**. The analog radio transceiver **188** is unlikely to be integrated in the same chip, but may be integrated in the same package.

Since the player incorporates a dedicated video/audio decoder **178**, the processor unit **181** only needs to be powerful enough to control and coordinate the other components. Alternatively, the video/audio decoder may be omitted, and a more powerful processor can used to decode the compressed video and audio in software.

The transceiver **188** is typically a short-range radio transceiver. It may support any of a number of wireless transmission standards, including Bluetooth/IEEE 802.15, IEEE 802.11, HomeRF/SWAP, HIPERLAN, and OpenAir. Bluetooth/IEEE 802.15, IEEE 802.11-1997, HIPERLAN, OpenAir, and HomeRF/SWAP all support transmission rates in the range of 1 to 2 Mbit/s. IEEE 802.11b supports transmission rates of 5.5 Mbit/s and 11 Mbit/s. HIPERLAN also supports a transmission rate of 24 Mbit/s in an alternative mode. Beyond these currently-supported wireless LAN (WLAN) standards, next-generation WLAN standards promise to support transmission rates of 100 Mbit/s and beyond.

The player may alternatively be connected to the base station by cable, or may utilize a non-radio-frequency wireless transport, such as infrared. IEEE 802.11, for example, optionally utilizes an infrared transport. IrDA also utilizes an infrared transport.

The player may alternatively or additionally contain a mobile telephone transceiver for longer-range communication with a netpage server via a mobile telephone network. If the transceiver supports a third-generation 'always-on' packet-switched connection, then the player may download or stream audio content at will. If the transceiver only supports a circuit-switched connection, then the player may choose to connect (and potentially stream audio content) only when it encounters a hyperlink.

If the player incorporates a longer-range transceiver, then it may act as a netpage base station for wireless netpage pens and other netpage sensing devices.

Assuming a compressed video data rate of 1.2 Mbit/s (e.g. MPEG-1 SIF at 30 Hz), the receiver must support a data rate of at least 1.2 Mbit/s. This is within the capabilities of some of the wireless transmission standards described above. Lower (or higher) data rates can be readily achieved by decreasing (or increasing) frame resolution, frame rate and/or image quality. The netpage network can dynamically recode a compressed video stream to match a particular player's capabilities, if necessary, either at a server or at a base station.

The player is controlled by five buttons, generally indicated by **104**. The five buttons are a power button **192**, a play button **194**, a stop button **196**, a rewind button **198** and a fast forward button **200**. The buttons are sandwiched between the upper molding **114** and the PCB **118** and act on switches **202**, **204**, **206**, **208** & **210** respectively.

The player is provided with a stand **212** comprising two legs **214** & **216** hinged together at adjacent ends by a pin **218** engaging in alternating sets of cylindrical apertures **220** & **222** in the two wings. The wing **214** is mounted at its other end for rotation on the lower molding **116** by integral pins **224**. The wing **216** is mounted at its other end for rotation and sliding on the lower molding **116** by integral pins **226**. The pins **226** engage in slots **228** in downward extending rails **230**. The slots are long enough to allow the two legs to be laid flat between the two rails. The rails extend from the general plane of the lower molding more than the thickness of the legs so that when folded flat the player rests on the rails not the wings. The slots are not smooth but have a number of protrusions **232** which limit movement of the pins, so that the legs may be placed in one of a number of positions to tilt the player relative to the surface on which it rests.

Referring to FIG. **11**, in use the user has one or more substrates **200** having netpage tags **202** tiled over its surface. For clarity only some of the tags are shown. The substrate **200** may be paper, electronic paper such as used by E-ink Corporation, a plastics sheet or any other suitable substrate. The substrate carries one or more entries of human readable text **204**, usually titles of one or more videos available for viewing by the user. The human readable text may optionally include a summary or a small logo or picture **224**. The entries themselves may be "active" in that the user may select the entry by selecting the summary or a separate selection "button" may be provided to select the video. The entire page may be tiled with netpage tags or tags may only

be provided in "active" areas. To select a video the user merely clicks the sensor device **112** on the relevant "active" area.

The sensor device **112** senses one or more of the tags **202**, decodes the coded information and transmits this decoded information to the netpage system. As discussed in our co-pending application U.S. Ser. No. 09/722,142, now issued U.S. Pat. No. 6,965,439, each tag incorporates data which identifies the page it is on and its location within the page. The netpage system is thus capable of determining what video file(s) are associated with the sensed tags and so can extract video file(s) and transmit them to the player for display on the LCD.

Data is preferably compressed in MPEG format and streamed to the player **100**. The data is received via the aerial **190** and transceiver **188** and passed to the dedicated MPEG decoder **178** for decoding. The decoded data is then transferred to the display controller **250** for display on the color display **102**. Streaming video is buffered in the player's DRAM **182** to eliminate transmission jitter. The size of the required buffer depends on wireless bandwidth contention and contention for the server supplying the streaming data.

Control of the video playback is via the control buttons **104**. When the user presses one of the buttons, the processor **180** determines the function of the button and sends an appropriate instruction to the netpage system. According to the instruction, the system modifies or stops transmission of data to the player.

After a video clip has been selected but before playback has commenced the display may change to display the title and optionally the playing time of the video. Optionally controls such as play, fast forward, rewind stop and pause may be displayed, such that the user may control the player via the screen rather than the dedicated control buttons.

The video player optionally includes a microphone, video camera and a record button. It can then be used to record audio and/or video input , thus providing another kind of netpage input. Recorded input may, for example, be associated with a location on a netpage, in the form of an annotation, by clicking at the location with the video player. Subsequent clicks at the same location using a video player then cause the audio and/or video annotation to be played back. If the surfaces of physical objects are universally netpage-enabled, i.e. tagged with unique netpage tags, then audio and/or video annotations can be placed almost anywhere. Such audio and video annotations may be private or public. When they are private they may only be played back by their author. When they are public they may be played back by anyone.

When incorporating a microphone and video camera, the video player can be configured to act as a wireless telephone or video telephone under the control of a telephony application. Since the player lacks a user interface for dialing numbers, numbers can be selected from a netpage in the manner described in our co-pending application U.S. Ser. No. 09/721 895.

A video clip may be associated with a netpage in the form of a hyperlink, in which case activation of the hyperlink by the video player is ultimately handled by an application whose responsibility it becomes to provide the video clip to the player. A video clip may also be logically embedded as a video clip object in a page description, in which case clip activation is ultimately handled by the page server which holds the page description. Any click in the zone of the video clip object is interpreted by the page server as video clip activation. In either case the actual video clip may be stored on a separate remote server, which may become involved in the streaming playback or download of the video clip.

The video player can download a video clip activated by the user into its internal memory before making it available for playback, or it can stream the video clip on demand from the remote server in response to the user interacting with the player's playback controls. The player may also include non-volatile storage, such as flash memory, magnetic disk, CD writer or CD rewriter for storage of downloaded video data. The schemes outlined in our co-pending application U.S. Ser. No. 09/722,087, now issued U.S. Pat. No. 6,788,982, regarding storage of downloaded data and device identity may be used for storage of video data.

The player typically incorporates power management. After a period of inactivity the player may inactivate the status display. After a longer period of inactivity the processor may enter a power-conserving quiescent state. Power management may be coupled with the tag sensor micro switch, allowing wake-up on page interaction. The player may also incorporate an accelerometer for this purpose.

Whilst the invention has been described with reference to the netpage system which uses invisible tags, the invention is not limited to the netpage system or the use of invisible tags. If desired, the invention may utilize tags or codes which are visible to the average unaided human eye, such as bar codes. The tags need not merely encode an identity which is then used to look up the relevant files. The tags may encode instructions at a higher level. For example a tag may encode an instruction of "play chapter 99". If invisible tags are used they need not be limited to the tags disclosed in relation to the netpage system. Other tagging systems are available and any suitable tagging system may be used. The invention is not limited to the use of inks which absorb certain wavelengths or fluoresce certain wavelengths. Magnetic inks, surface modification, including apertures, modification of the structure of the substrate itself all fall within the scope of the invention. The systems and methods to link the audio player of the present invention and the source of the audio files are not limited to netpage systems. A video player may be linked by a cable to a single computer, rather than a network of computers.

The present invention has been described with reference to a preferred embodiment and number of specific alternative embodiments. However, it will be appreciated by those skilled in the relevant fields that a number of other embodiments, differing from those specifically described, will also fall within the spirit and scope of the present invention. Accordingly, it will be understood that the invention is not intended to be limited to the specific embodiments described in the present specification, including documents incorporated by cross-reference as appropriate. The scope of the invention is only limited by the attached claims.

The invention claimed is:

1. A video player including:

a body;

at least one sensor positioned in the body so that coded data printed on a substrate is sensed by positioning the video player body relative to the substrate, the sensor generating first data from the sensed coded data;

a transmitter positioned in the body for transmitting, to a computer system, said first data or second data at least partially based on the first data;

a receiver positioned in the body for receiving, from the computer system, video data associated with an identity derived from the first data; and

at least one display device positioned in the body for outputting a visual display based at least partially on the video data.

2. The video player of claim **1** further including a memory for storing received video data.

3. The video player of claim **2** wherein at least part of the memory is user replaceable.

4. The video player of claim **2** wherein the video player has an identity and further includes processor means to store the identity or data indicative of the identity with or in any file stored in memory.

5. The video player of claim **1** further including a means to display information relating to received video data.

6. The video player of claim **1** including an actuator to enable a user to activate the at least one sensor.

7. The video player of claim **6**, wherein the actuator is a force sensor.

8. The video player of claim **1** including a motion sensor to enable a user to actuate the video device.

9. A method of obtaining video data, the method including:

providing a plurality of separately identifiable video data;

associating each of the plurality of separately identifiable video data with one or more identities;

providing at least one paper-like substrate having at least one selection data printed thereon, the at least one selection data associated with or encoding at least one identity;

selecting at least one of the at least one selection data of the at least one paper-like substrate with a selection device locate in a video player body, the selection device being located in the video player body so as to perform said selecting by positioning the video player body relative to the paper-like substrate;

determining the identity or identities associated with the selected selection data and identifying the file or files associated with the identity or identities determined from the selection data; and

downloading the video data identified to the selection device to the video player.

10. The method of claim **9** wherein the selection data includes machine readable codes.

11. The method of claim **9** further including playing the video data.

12. The method of claim **9** further including storing the video data in a memory of the selection device.

13. The method of claim **9** wherein the selection device has a unique identity.

14. The method of claim **9** wherein the selection device has a unique identity and further including storing the video data in memory of the selection device together with association data indicative of an association between the identity of the selection device and the video data.

15. The method of claim **9** further including:

selecting video data stored in memory of the selection device; extracting from the memory the identity of the selection device associated with the selected video data;

comparing the extracted identity with the identity of the selection device; and

if the extracted identity and the identity of the selection device are the same, playing the file.

16. The method of claim **9** further including:

selecting video data stored in memory of the selection device;

extracting from the memory the identity of the selection device associated with the selected video data;

comparing the extracted identity with the identity of the selection device; and

if the extracted identity and the identity of the selection device are not the same, not playing the file.

17. The method of claim **9** wherein the selection data is invisible or substantially invisible to the average unaided human eye.

18. The method of claim **9** wherein the substrate has visible data associated with at least one selection data.

* * * * *