UNITED STATES PATENT AND TRADEMARK OFFICE

UNITED STATES DEPARTMENT OF COMMERCE
United States Patent and Trademark Office
Address: COMMISSIONER FOR PATENTS
P.O. Box 1450
Alexandria, Virginia 22313-1450
www.uspto.gov

APPLICATION NO.	FILING DATE	FIRST NAMED INVENTOR	ATTORNEY DOCKET NO.	CONFIRMATION NO.
12/508,529	07/23/2009	Daniel Rogers Burnett	EMKNNZ00301	8186

40518 7590 01/31/2013
LEVINE BAGADE HAN LLP
2400 GENG ROAD, SUITE 120
PALO ALTO, CA 94303

EXAMINER
BURK, CATHERINE E

ART UNIT	PAPER NUMBER
3735	

MAIL DATE	DELIVERY MODE
01/31/2013	PAPER

Please find below and/or attached an Office communication concerning this application or proceeding.

The time period for reply, if any, is set in the attached communication.

Cala Health Ex. 1014 (Part 2 of 2)
Cala v. EMKinetics
USP 10,786,669

Office Action Summary	Application No.	Applicant(s)	
	12/508,529	BURNETT ET AL.	
	Examiner	Art Unit	
	CATHERINE E. BURK	3735	

-- The MAILING DATE of this communication appears on the cover sheet with the correspondence address --

Period for Reply

A SHORTENED STATUTORY PERIOD FOR REPLY IS SET TO EXPIRE 3 MONTH(S) OR THIRTY (30) DAYS, WHICHEVER IS LONGER, FROM THE MAILING DATE OF THIS COMMUNICATION.

- Extensions of time may be available under the provisions of 37 CFR 1.136(a). In no event, however, may a reply be timely filed after SIX (6) MONTHS from the mailing date of this communication.
- If NO period for reply is specified above, the maximum statutory period will apply and will expire SIX (6) MONTHS from the mailing date of this communication.
- Failure to reply within the set or extended period for reply will, by statute, cause the application to become ABANDONED (35 U.S.C. § 133). Any reply received by the Office later than three months after the mailing date of this communication, even if timely filed, may reduce any earned patent term adjustment. See 37 CFR 1.704(b).

Status

1)☒ Responsive to communication(s) filed on *02 January 2013*.

2a)☐ This action is **FINAL**. 2b)☒ This action is non-final.

3)☐ An election was made by the applicant in response to a restriction requirement set forth during the interview on _____; the restriction requirement and election have been incorporated into this action.

4)☐ Since this application is in condition for allowance except for formal matters, prosecution as to the merits is closed in accordance with the practice under *Ex parte Quayle*, 1935 C.D. 11, 453 O.G. 213.

Disposition of Claims

5)☒ Claim(s) *1-54* is/are pending in the application.

5a) Of the above claim(s) *1-18 and 35-54* is/are withdrawn from consideration.

6)☐ Claim(s) _____ is/are allowed.

7)☒ Claim(s) *19-34* is/are rejected.

8)☐ Claim(s) _____ is/are objected to.

9)☐ Claim(s) _____ are subject to restriction and/or election requirement.

* If any claims have been determined allowable, you may be eligible to benefit from the **Patent Prosecution Highway** program at a participating intellectual property office for the corresponding application. For more information, please see http://www.uspto.gov/patents/init_events/pph/index.jsp or send an inquiry to PPHfeedback@uspto.gov.

Application Papers

10)☐ The specification is objected to by the Examiner.

11)☒ The drawing(s) filed on *12 March 2010* is/are: a)☒ accepted or b)☐ objected to by the Examiner.

Applicant may not request that any objection to the drawing(s) be held in abeyance. See 37 CFR 1.85(a).

Replacement drawing sheet(s) including the correction is required if the drawing(s) is objected to. See 37 CFR 1.121(d).

Priority under 35 U.S.C. § 119

12)☐ Acknowledgment is made of a claim for foreign priority under 35 U.S.C. § 119(a)-(d) or (f).

a)☐ All b)☐ Some * c)☐ None of:

1.☐ Certified copies of the priority documents have been received.

2.☐ Certified copies of the priority documents have been received in Application No. _____.

3.☐ Copies of the certified copies of the priority documents have been received in this National Stage application from the International Bureau (PCT Rule 17.2(a)).

* See the attached detailed Office action for a list of the certified copies not received.

Attachment(s)

1) ☒ Notice of References Cited (PTO-892)

2) ☒ Information Disclosure Statement(s) (PTO/SB/08) Paper No(s)/Mail Date *See Continuation Sheet*.

3) ☐ Interview Summary (PTO-413) Paper No(s)/Mail Date. _____ .

4) ☐ Other: _____.

Continuation of Attachment(s) 2). Information Disclosure Statement(s) (PTO/SB/08), Paper No(s)/Mail Date :17 February 2011, 8 March 2011, 2 January 2013.

DETAILED ACTION

Election/Restrictions

1. Applicant's election without traverse of Group II, claims 19-34 in the reply filed on January 2nd, 2013 is acknowledged.

Information Disclosure Statement

2. Documents 256, 260, 270, 273, and 295 of the IDS submitted February 17th, 2011 were not considered because they are undated.

Claim Rejections - 35 USC § 112

3. The following is a quotation of 35 U.S.C. 112(b):

> (B) CONCLUSION.—The specification shall conclude with one or more claims particularly pointing out and distinctly claiming the subject matter which the inventor or a joint inventor regards as the invention.

The following is a quotation of 35 U.S.C. 112 (pre-AIA), second paragraph:

> The specification shall conclude with one or more claims particularly pointing out and distinctly claiming the subject matter which the applicant regards as his invention.

4. Claim 24 is rejected under 35 U.S.C. 112(b) or 35 U.S.C. 112 (pre-AIA), second paragraph, as being indefinite for failing to particularly point out and distinctly claim the subject matter which the inventor or a joint inventor, or for pre-AIA the applicant regards as the invention.

5. Claim 24 recites the limitation "said sensor" in line 1. There is insufficient antecedent basis for this limitation in the claim.

Claim Rejections - 35 USC § 103

6. The following is a quotation of 35 U.S.C. 103(a) which forms the basis for all obviousness rejections set forth in this Office action:

> (a) A patent may not be obtained though the invention is not identically disclosed or described as set forth in section 102 of this title, if the differences between the subject matter sought to be patented and the prior art are such that the subject matter as a whole would have been obvious at the time the invention was made to a person having ordinary skill in the art to which said subject matter pertains. Patentability shall not be negatived by the manner in which the invention was made.

7. Claims 19, 22-24, and 27-32 are rejected under 35 U.S.C. 103(a) as being unpatentable over Malaney (US 2002/0183804 A1) in view of Byers (US 4837049).

8. Claim 19; Malaney discloses an energy emitting system comprising an electrode patch -14- configured to generate an electrical stimulus focused on a target nerve in proximity to the patch [0031]. Malaney further discloses a controller -10- coupled to the patch via lead -16- [0030 and 37]. Malaney is silent as to the patch comprising a microneedle array deposited on the surface of an electrode. However, Byers discloses an electrode patch that can be used for applying electrical stimulus to nerve tissue (col. 2, lines 58-68) comprising an array of microneedles deposited on a surface of at least one electrode (or conducting layer) (col. 10, lines 18-29). It would have been obvious to one of ordinary skill in the art at the time of the invention to use the microneedle array patch electrode disclosed by Byers as the transcutaneous electrode in Malaney's system because Byers discloses this type of electrode provides better electrical contact with subcutaneous conductive tissue (col. 5, lines 45-51).

9. Claim 22; the microneedle array disclosed by Byers may be etched from a surface of the electrode (col. 10, lines 6-9, 18-22, and 55-62).

10. Claim 23; each microneedle disclosed by Byers comprises an electrically conductive material (col. 10, lines 32-38) which can transmit an electrical signal to an overlying electrode (electrical conductor material col. 10, lines 18-22).

11. Claim 24; Byers discloses the needles comprise metal (col. 10, lines 32-35).

12. Claims 27-30; Byers discloses an exemplary needle diameter of 5-10 microns and a length of 100 microns (col. 7, lines 37-42).

13. Claims 31 and 32; Malaney further discloses an electrode needle -12- coupled to the controller -10- with an end insert able into the body in proximity to a stimulation site -15-. The needle is inductively coupled to the patch electrode and the patch is positioned distal to the stimulation site such that upon activation of the controller, a current traverses the stimulation site by passing from the patch to the electrode needle [0031].

14. Claims 20, 21, and 25 are rejected under 35 U.S.C. 103(a) as being unpatentable over Malaney in view of Byers as applied to claim 19 above, and further in view of Loeb (US 6735474 B1).

15. Claim 20; Malaney in view of Byers is silent as to a sensor for detecting muscle stimulation. However, Loeb discloses using an implanted electrical stimulator/sensor -10- to detect muscle contraction(s) resulting from electrical stimulation of a target nerve in order to allow a controller to automatically adjust stimulation parameters (col. 11, lines 15-26). It would have been obvious to one of ordinary skill in the art at the time of the invention to include a sensor to detect muscle contraction(s) resulting from nerve stimulation in the system disclosed by Malaney in view of Byers because it would ensure the controller can tailor stimulation to an individual (col. 11, lines 24-26). Loeb's sensor is implanted, however Byers discloses the microneedle electrodes (attached to the skin) can also be used to sense electrical signals in underlying tissue (such as nerves or muscle) (col. 1, lines 40-43 and col. 2, lines 12-15). It would have been obvious to one of ordinary skill in the art at the time of the invention to use a

skin-mounted microneedle sensor in the combination taught by Malaney in view of Byers in view of Loeb because they are less invasive than implanted sensors.

16. Claim 21; Loeb discloses the muscle stimulation detected is used to alter the electrical stimulation parameters to ensure adequate therapeutic stimulation (stimulation tailored to a person's response) (col. 11, lines 24-26).

17. Claim 25; the sensor in the combination described with respect to claim 23 is a microneedle array.

18. Claim 26 is rejected under 35 U.S.C. 103(a) as being unpatentable over Malaney in view of Byers as applied to claim 19 above, and further in view of Surgenor (US 2006/0049957 A1).

19. Malaney in view of Byers are silent as to a bulbous tip on the needles. However, Surgenor discloses microneedles of an electrode array can be provided with anchoring means such as bulbous tips [0062]. It would have been obvious to one of ordinary skill in the art at the time of the invention to include a bulbous tip on at least some of the microneedles in the system disclosed by Malaney in view of Byers because Surgenor discloses they help in anchoring the electrode substrate to the tissue [0062].

20. Claim 33 is rejected under 35 U.S.C. 103(a) as being unpatentable over Malaney in view of Byers as applied to claim 32 above, and further in view of Fairbanks (US 4233965).

21. Malaney in view of Byers is silent as to a conductive coil positioned distal to the stimulation side and coupled to the controller. However, Fairbanks discloses a modified electrical stimulation device comprising a conductive coil -14- over an electrode patch -12-

connected to a controller -32- (fig. 1a). It would have been obvious to one of ordinary skill in the art at the time of the invention to incorporate a conductive coil over the electrode patch in the system disclosed by Malaney in view of Byers because Fairbanks discloses the coil helps focus the electric current in to tissue (col. 2, lines 46-47 and col. 3, line 65 - col. 4, line 3). When a conductive coil is present over the electrode patch location, it will also be located distal to the stimulation site such that upon activation of said controller, a current traverses the stimulation site by passing from the patch and the coil to the electrode needle (Malaney [0031]).

22. Claim 34 is rejected under 35 U.S.C. 103(a) as being unpatentable over Malaney in view of Byers in view of Loeb in view of Surgenor.

23. Malaney discloses an energy emitting system comprising an electrode patch -14- configured to generate an electrical stimulus focused on a target nerve in proximity to the patch [0031]. Malaney further discloses a controller -10- coupled to the patch via lead -16- [0030 and 37]. Malaney is silent as to the patch comprising a microneedle array deposited on the surface of an electrode. However, Byers discloses an electrode patch that can be used for applying electrical stimulus to nerve tissue (col. 2, lines 58-68) comprising an array of microneedles on a surface of at least one electrode (or conducting layer) (col. 10, lines 18-29). The microneedle array comprises electrically conductive material (col. 10, lines 32-38) such that it can transmit an electrical signal to an overlying electrode (electrical conductor material col. 10, lines 18-22). It would have been obvious to one of ordinary skill in the art at the time of the invention to use the microneedle array patch electrode disclosed by Byers as the transcutaneous electrode in

Malaney's system because Byers discloses this type of electrode provides better electrical contact with subcutaneous conductive tissue (col. 5, lines 45-51).

Malaney in view of Byers is silent as to a sensor for detecting muscle stimulation. However, Loeb discloses using an implanted electrical stimulator/sensor -10- to detect muscle contraction(s) resulting from electrical stimulation of a target nerve in order to allow a system to automatically adjust stimulation parameters (col. 11, lines 15-26). It would have been obvious to one of ordinary skill in the art at the time of the invention to include a sensor to detect muscle contraction(s) resulting from nerve stimulation in the system disclosed by Malaney in view of Byers because it would ensure stimulation is tailored to the individual receiving treatment (col. 11, lines 24-26). Loeb's sensor is implanted, however Byers discloses the microneedle electrodes (attached to the skin) can also be used to sense electrical signals in underlying tissue (such as nerves or muscle) (col. 1, lines 40-43 and col. 2, lines 12-15). It would have been obvious to one of ordinary skill in the art at the time of the invention to use a skin-mounted microneedle sensor in the combination taught by Malaney in view of Byers in view of Loeb because they are less invasive than implanted sensors.

Malaney in view of Byers in view of Loeb is silent as to a bulbous tip on the needles. However, Surgenor discloses microneedles of an electrode array can be provided with anchoring means such as bulbous tips [0062]. It would have been obvious to one of ordinary skill in the art at the time of the invention to include a bulbous tip on at least some of the microneedles in the system disclosed by Malaney in view of Byers in view of Loeb because Surgenor discloses they help in anchoring the electrode substrate to the tissue [0062].

Conclusion

Any inquiry concerning this communication or earlier communications from the examiner should be directed to CATHERINE E. BURK whose telephone number is (571)270-7130. The examiner can normally be reached on Monday-Friday 9:00 am - 5:30 pm Eastern Time.

If attempts to reach the examiner by telephone are unsuccessful, the examiner's supervisor, Charles Marmor can be reached on (571) 272-4730. The fax phone number for the organization where this application or proceeding is assigned is 571-273-8300.

Information regarding the status of an application may be obtained from the Patent Application Information Retrieval (PAIR) system. Status information for published applications may be obtained from either Private PAIR or Public PAIR. Status information for unpublished applications is available through Private PAIR only. For more information about the PAIR system, see http://pair-direct.uspto.gov. Should you have questions on access to the Private PAIR system, contact the Electronic Business Center (EBC) at 866-217-9197 (toll-free). If you would like assistance from a USPTO Customer Service Representative or access to the automated information system, call 800-786-9199 (IN USA OR CANADA) or 571-272-1000.

/Charles A. Marmor, II/
Supervisory Patent Examiner
Art Unit 3735

/C. E. B./
Examiner, Art Unit 3735

Notice of References Cited	Application/Control No. 12/508,529	Applicant(s)/Patent Under Reexamination BURNETT ET AL.	
	Examiner CATHERINE E. BURK	Art Unit 3735	Page 1 of 1

U.S. PATENT DOCUMENTS

*		Document Number Country Code-Number-Kind Code	Date MM-YYYY	Name	Classification
*	A	US-4,233,965 A	11-1980	Fairbanks, Everitt E.	600/14
*	B	US-4,837,049 A	06-1989	Byers et al.	216/6
*	C	US-2002/0183804 A1	12-2002	Malaney et al.	607/48
*	D	US-6,735,474 B1	05-2004	Loeb et al.	607/41
*	E	US-2006/0049957 A1	03-2006	Surgenor et al.	340/825.19
	F	US-			
	G	US-			
	H	US-			
	I	US-			
	J	US-			
	K	US-			
	L	US-			
	M	US-			

FOREIGN PATENT DOCUMENTS

*		Document Number Country Code-Number-Kind Code	Date MM-YYYY	Country	Name	Classification
	N					
	O					
	P					
	Q					
	R					
	S					
	T					

NON-PATENT DOCUMENTS

*		Include as applicable: Author, Title Date, Publisher, Edition or Volume, Pertinent Pages)
	U	
	V	
	W	
	X	

*A copy of this reference is not being furnished with this Office action. (See MPEP § 707.05(a).)
Dates in MM-YYYY format are publication dates. Classifications may be US or foreign.

CUSTOMIZED PTO/SB/08a/b (07-05)

Substitute for form 1449/PTO

INFORMATION DISCLOSURE STATEMENT BY APPLICANT

(Use as many sheets as necessary)

Sheet	1	of	2

Complete if Known	
Application Number	12/508,529
Filing Date	July 23, 2009
First Named Inventor	Daniel R. BURNETT
Art Unit	3735
Examiner Name	Catherine E. Burk
Attorney Docket Number	EMKNNZ00301

U.S. PATENT DOCUMENTS

Examiner Initials*	Cite No.[1]	Document Number Number-Kind Code[2] *(if known)*	Publication Date MM-DD-YYYY	Name of Patentee or Applicant of Cited Document	Pages, Columns, Lines, Where Relevant Passages or Relevant Figures Appear
	1.	3,841,305	10-15-1974	Hallgren	
	2.	4,266,533	05-12-1981	Ryaby et al.	
	3.	4,926,878	05-22-1990	Snedeker	
	4.	5,309,909	05-10-1994	Gadsby et al	
	5.	5,562,707	10-08-1996	Prochazka et al.	
	6.	5,978,712	11-02-1999	Suda et al.	
	7.	6,366,795	04-02-2002	Bremer et al.	
	8.	7,032,302	04-25-2006	Schmidt et al.	
	9.	7,187,976	03-06-2007	Duncan et al.	
	10.	2003/0144625	07-31-2003	Sherman et al.	
	11.	2004/0010276	01-15-2004	Jacobs et al.	
	12.	2004/0122787	06-24-2004	Avanash et al.	
	13.	2004/0173220	09-09-2004	Harry et al.	
	14.	2005/0021104	01-27-2005	Dilorenzo	
	15.	2005/0143783	06-30-2005	Boveja et al.	
	16.	2005/0143789	06-30-2005	Whitehurst et al.	
	17.	2005/0203602	09-15-2005	Wallace et al.	
	18.	2005/0283202	12-22-2005	Gellman	
	19.	2006/0135844	06-22-2006	Alekseyenko	
	20.	2006/0276702	12-07-2006	Mcginnis	
	21.	2007/0250162	10-25-2007	Royalty	
	22.	2007/0265489	11-15-2007	Fowler et al.	
	23.	2008/0004484	01-03-2008	Wieraszko et al.	
	24.	2010/0022864	01-28-2010	Cordero et al.	
	25.	2011/0295100	12-01-2011	Hedge et al.	

FOREIGN PATENT DOCUMENTS

Examiner Initials*	Cite No.[1]	Foreign Patent Document Country Code[3]-Number[4]-Kind Code[5] *(if known)*	Publication Date MM-DD-YYYY	Name of Patentee or Applicant of Cited Document	Pages, Columns, Lines, Where Relevant Passages or Relevant Figures Appear	T[6]
	26.	JP 2000-254239	09-19-2000	APOLLO MEC:KK		
	27.	WO 2011/053607	05-05-2011	EMKINETICS, INC.		
	28.	WO 2011/053661	05-05-2011	EMKINETICS, INC.		
	29.	WO 2011/150332	12-01-2011	EMKINETICS, INC.		
	30.	WO 2012/040243	03-29-2012	EMKINETICS, INC.		

Examiner Signature	/Catherine Burk/	Date Considered	01/24/2013

ALL REFERENCES CONSIDERED EXCEPT WHERE LINED THROUGH. /C.B./

CUSTOMIZED PTO/SB/08a/b (07-05)

Substitute for form 1449/PTO

INFORMATION DISCLOSURE STATEMENT BY APPLICANT

(Use as many sheets as necessary)

Sheet	2	of	2

Complete if Known	
Application Number	12/508,529
Filing Date	July 23, 2009
First Named Inventor	Daniel R. BURNETT
Art Unit	3735
Examiner Name	Catherine E. Burk
Attorney Docket Number	EMKNNZ00301

*EXAMINER: Initial if information considered, whether or not citation is in conformance with MPEP 609. Draw line through citation if not in conformance and not considered. Include copy of this form with next communication to applicant. [1] Applicant's unique citation designation number (optional). [2] See Kinds Codes of USPTO Patent Documents at www.uspto.gov or MPEP 901.04. [3] Enter Office that issued the document, by the two-letter code (WIPO Standard ST.3). [4] For Japanese patent documents, the indication of the year of the reign of the Emperor must precede the serial number of the patent document. [5] Kind of document by the appropriate symbols as indicated on the document under WIPO Standard ST. 16 if possible. [6] Applicant is to place a check mark here if English language Translation is attached.

Examiner Signature	/Catherine Burk/	Date Considered	01/24/2013

ALL REFERENCES CONSIDERED EXCEPT WHERE LINED THROUGH. /C.B./

CUSTOMIZED PTO/SB/08a/b (07-05)

Substitute for form 1449/PTO

INFORMATION DISCLOSURE STATEMENT BY APPLICANT

(Use as many sheets as necessary)

Sheet	1	of	11

Complete If Known	
Application Number	12/508,529
Filing Date	July 23, 2009
First Named Inventor	Daniel Rogers BURNETT
Art Unit	3766
Examiner Name	Not Yet Assigned
Attorney Docket Number	EMKNNZ00301

U.S. PATENT DOCUMENTS

Examiner Initials*	Cite No.[1]	Document Number Number-Kind Code[2] *(if known)*	Publication Date MM-DD-YYYY	Name of Patentee or Applicant of Cited Document	Pages, Columns, Lines, Where Relevant Passages or Relevant Figures Appear
	1.	2,893,392	07-07-1959	Wagner et al.	
	2.	3,034,507	05-15-1962	McConnell et al.	
	3.	3,817,254	06-18-1974	Maurer	
	4.	4,428,366	01-31-1984	Findl et al.	
	5.	4,456,012	06-26-1984	Lattin	
	6.	4,548,208	10-22-1985	Niemi	
	7.	4,574,809	03-11-1986	Talish et al.	
	8.	4,784,737	11-15-1988	Ray et al.	
	9.	4,804,054	02-14-1989	Howson et al.	
	10.	4,915,110	04-10-1990	Kitov	
	11.	4,940,453	07-10-1990	Cadwell	
	12.	5,000,178	03-19-1991	Griffith	
	13.	5,014,699	05-14-1991	Pollack et al.	
	14.	5,092,835	03-03-1992	Schurig et al.	
	15.	5,181,902	01-26-1993	Erickson et al.	
	16.	5,314,401	05-24-1994	Tepper	
	17.	5,314,453	05-24-1994	Jeutter	
	18.	5,401,233	03-28-1995	Erickson et al.	
	19.	5,449,378	09-12-1995	Schouenborg	
	20.	5,518,495	05-21-1996	Kolt	
	21.	5,690,693	11-25-1997	Wang et al.	
	22.	5,715,837	02-10-1998	Chen	
	23.	5,725,471	03-10-1998	Davey et al.	
	24.	5,749,909	05-12-1998	Schroeppel et al.	
	25.	5,766,124	06-16-1998	Polson	
	26.	5,792,187	08-11-1998	Adams	
	27.	5,792,209	08-11-1998	Varner	
	28.	5,833,600	11-10-1998	Young	
	29.	5,857,957	01-12-1999	Lin	
	30.	5,984,854	11-16-1999	Ishikawa et al.	
	31.	6,009,878	01-04-2000	Weijand et al.	
	32.	6,024,691	02-15-2000	Tepper et al.	
	33.	6,029,090	02-22-2000	Herbst	
	34.	6,032,677	03-07-2000	Blechman et al.	
	35.	6,066,084	05-23-2000	Edrich et al.	
	36.	6,086,525	07-11-2000	Davey et al.	
	37.	6,088,619	07-11-2000	Hein et al.	
	38.	6,123,658	09-26-2000	Schweighofer et al.	

Examiner Signature	/Catherine Burk/	Date Considered	01/24/2013

ALL REFERENCES CONSIDERED EXCEPT WHERE LINED THROUGH. /C.B./

CUSTOMIZED PTO/SB/08a/b (07-05)

Substitute for form 1449/PTO

INFORMATION DISCLOSURE STATEMENT BY APPLICANT

(Use as many sheets as necessary)

Sheet	2	of	11

Complete If Known	
Application Number	12/508,529
Filing Date	July 23, 2009
First Named Inventor	Daniel Rogers BURNETT
Art Unit	3766
Examiner Name	Not Yet Assigned
Attorney Docket Number	EMKNNZ00301

	39.	6,143,035	11-07-2000	McDowell	
	40.	6,155,966	12-05-2000	Parker	
	41.	6,179,770	01-30-2001	Mould	
	42.	6,190,893	02-20-2001	Shastri et al.	
	43.	6,200,259	03-13-2001	March	
	44.	6,213,933	04-10-2001	Lin	
	45.	6,219,575	04-17-2001	Nemati	
	46.	6,256,533	07-03-2001	Yuzhakov et al.	
	47.	6,261,221	07-17-2001	Tepper et al.	
	48.	6,312,612	11-06-2001	Sherman et al.	
	49.	6,334,856	01-01-2002	Allen et al.	
	50.	6,349,233	02-19-2002	Adams	
	51.	6,379,324	04-30-2002	Gartstein et al.	
	52.	6,440,096	08-27-2002	Lastovich et al.	
	53.	6,443,883	09-03-2002	Ostrow et al.	
	54.	6,451,240	09-17-2002	Sherman et al.	
	55.	6,471,903	10-29-2002	Sherman et al.	
	56.	6,473,652	10-29-2002	Sarwal et al.	
	57.	6,491,620	12-10-2002	Davey	
	58.	6,493,588	12-10-2002	Malaney et al.	
	59.	6,500,110	12-31-2002	Davey et al.	
	60.	6,503,231	01-07-2003	Prausnitz et al.	
	61.	6,511,463	01-28-2003	Wood et al.	
	62.	6,527,694	03-04-2003	Ishikawa et al.	
	63.	6,533,949	03-18-2003	Yeshurun et al.	
	64.	6,537,242	03-25-2003	Palmer	
	65.	6,553,263	04-22-2003	Meadows et al.	
	66.	6,558,361	05-06-2003	Yeshurun	
	67.	6,565,532	05-20-2003	Yuzhakov et al.	
	68.	6,582,393	06-24-2003	Sage, Jr.	
	69.	6,591,124	07-08-2003	Sherman et al.	
	70.	6,595,947	07-22-2003	Mikszta et al.	
	71.	6,603,987	08-05-2003	Whitson	
	72.	6,611,707	08-26-2003	Prausnitz et al.	
	73.	6,623,457	09-23-2003	Rosenberg	
	74.	6,652,443	11-25-2003	Struppler et al.	
	75.	6,652,478	11-25-2003	Gartstein et al.	
	76.	6,654,636	11-25-2003	Dev et al.	
	77.	6,656,147	12-02-2003	Gertsek et al.	
	78.	6,663,556	12-16-2003	Barker	
	79.	6,663,820	12-16-2003	Arias et al.	
	80.	6,671,527	12-30-2003	Petersson et al.	

Examiner Signature	/Catherine Burk/	Date Considered	01/24/2013

ALL REFERENCES CONSIDERED EXCEPT WHERE LINED THROUGH. /C.B./

CUSTOMIZED PTO/SB/08a/b (07-05)

Substitute for form 1449/PTO

INFORMATION DISCLOSURE STATEMENT BY APPLICANT

(Use as many sheets as necessary)

Sheet	3	of	11

Complete If Known	
Application Number	12/508,529
Filing Date	July 23, 2009
First Named Inventor	Daniel Rogers BURNETT
Art Unit	3766
Examiner Name	Not Yet Assigned
Attorney Docket Number	EMKNNZ00301

	81.	6,678,556	01-13-2004	Nolan et al.	
	82.	6,684,106	01-27-2004	Herbst	
	83.	6,689,100	02-10-2004	Connelly et al.	
	84.	6,690,959	02-10-2004	Thompson	
	85.	6,697,669	02-24-2004	Dev et al.	
	86.	6,701,185	03-02-2004	Burnett et al.	
	87.	6,735,474	05-11-2004	Loeb et al.	
	88.	6,743,211	06-01-2004	Prausnitz et al.	
	89.	6,767,341	07-27-2004	Cho	
	90.	6,770,022	08-03-2004	Mechlenburg et al.	
	91.	6,770,480	08-03-2004	Canham	
	92.	6,790,372	09-14-2004	Roy et al.	
	93.	6,808,506	10-26-2004	Lastovich et al.	
	94.	6,835,184	12-28-2004	Sage et al.	
	95.	6,866,659	03-15-2005	Nemati	
	96.	6,881,203	04-19-2005	Delmore et al.	
	97.	6,899,838	05-31-2005	Lastovich	
	98.	6,908,453	06-21-2005	Fleming et al.	
	99.	6,926,660	08-09-2005	Miller	
	100.	6,931,277	08-16-2005	Yuzhakov et al.	
	101.	6,939,311	09-06-2005	Geiger	
	102.	6,941,171	09-06-2005	Mann et al.	
	103.	6,960,193	11-01-2005	Rosenberg	
	104.	6,962,772	11-08-2005	Liu et al.	
	105.	6,972,013	12-06-2005	Zhang et al.	
	106.	6,980,855	12-27-2005	Cho	
	107.	7,013,179	03-14-2006	Carter et al.	
	108.	7,027,478	04-11-2006	Ackley	
	109.	7,045,069	05-16-2006	Ozeryansky	
	110.	7,047,070	05-16-2006	Wilkinson et al.	
	111.	7,048,723	05-23-2006	Frazier et al.	
	112.	7,079,355	07-18-2006	Hsiao et al.	
	113.	7,083,592	08-01-2006	Lastovich et al.	
	114.	7,104,947	09-12-2006	Riehl	
	115.	7,115,108	10-03-2006	Wilkinson et al.	
	116.	7,117,034	10-03-2006	Kronberg	
	117.	7,130,696	10-31-2006	Carter et al.	
	118.	7,132,054	11-07-2006	Kravitz et al.	
	119.	7,153,256	12-26-2006	Riehl et al.	
	120.	7,226,439	06-05-2007	Prausnitz et al.	
	121.	7,262,068	08-28-2007	Roy et al.	
	122.	7,273,474	09-25-2007	Chang et al.	

Examiner Signature	/Catherine Burk/	Date Considered	01/24/2013

ALL REFERENCES CONSIDERED EXCEPT WHERE LINED THROUGH. /C.B./

CUSTOMIZED PTO/SB/08a/b (07-05)

Substitute for form 1449/PTO

INFORMATION DISCLOSURE STATEMENT BY APPLICANT

(Use as many sheets as necessary)

Sheet	4	of	11

Complete If Known	
Application Number	12/508,529
Filing Date	July 23, 2009
First Named Inventor	Daniel Rogers BURNETT
Art Unit	3766
Examiner Name	Not Yet Assigned
Attorney Docket Number	EMKNNZ00301

	123.	7,285,113	10-23-2007	Yeshurun	
	124.	7,315,758	01-01-2008	Kwiatkowski et al.	
	125.	7,316,665	01-08-2008	Laurent et al.	
	126.	7,320,664	01-22-2008	Riehl et al.	
	127.	7,332,197	02-19-2008	Wood et al.	
	128.	7,332,339	02-19-2008	Canham	
	129.	7,344,499	03-18-2008	Prausnitz et al.	
	130.	7,367,936	05-06-2008	Myers et al.	
	131.	7,396,326	07-08-2008	Ghiron et al.	
	132.	7,410,476	08-12-2008	Wilkinson et al.	
	133.	7,415,299	08-19-2008	Zimmermann et al.	
	134.	7,416,541	08-26-2008	Yuzhakov et al.	
	135.	7,429,333	09-30-2008	Chiou et al.	
	136.	7,473,244	01-06-2009	Frazier et al.	
	137.	7,481,337	01-27-2009	Luharuka et al.	
	138.	7,497,980	03-03-2009	Xu et al.	
	139.	7,500,911	03-10-2009	Johnson et al.	
	140.	7,520,848	04-21-2009	Schneider et al.	
	141.	7,530,968	05-12-2009	Gonnelli	
	142.	7,556,615	07-07-2009	Pettis et al.	
	143.	7,556,821	07-07-2009	Ameri et al.	
	144.	7,560,036	07-14-2009	Golubovic-Liakopoulos et al.	
	145.	7,570,992	08-04-2009	Nolan et al.	
	146.	7,572,405	08-11-2009	Sherman et al.	
	147.	7,574,256	08-11-2009	Carter	
	148.	7,578,954	08-25-2009	Gartstein et al.	
	149.	7,582,069	09-01-2009	Laurent et al.	
	150.	7,588,552	09-15-2009	Yeshurun et al.	
	151.	7,591,806	09-22-2009	Xu	
	152.	7,627,938	12-08-2009	Kim et al.	
	153.	7,647,112	01-12-2010	Tracey et al.	
	154.	7,648,484	01-19-2010	Yeshurun et al.	
	155.	7,651,946	01-26-2010	Wilke et al.	
	156.	7,658,728	02-09-2010	Yuzhakov	
	157.	2002/0082465	06-27-2002	Bashford et al.	
	158.	2002/0099323	07-25-2002	DEV et al.	
	159.	2002/0111777	08-15-2002	David	
	160.	2002/0133129	09-19-2002	Arias et al.	
	161.	2003/0028072	02-06-2003	Fischell et al.	
	162.	2003/0158583	08-21-2003	Burnett et al.	
	163.	2003/0158585	08-21-2003	Burnett	
	164.	2003/0216729	11-20-2003	Marchitto et al.	

Examiner Signature	/Catherine Burk/	Date Considered	01/24/2013

ALL REFERENCES CONSIDERED EXCEPT WHERE LINED THROUGH. /C.B./

CUSTOMIZED PTO/SB/08a/b (07-05)

Substitute for form 1449/PTO

INFORMATION DISCLOSURE STATEMENT BY APPLICANT

(Use as many sheets as necessary)

Sheet	5	of	11

Complete If Known	
Application Number	12/508,529
Filing Date	July 23, 2009
First Named Inventor	Daniel Rogers BURNETT
Art Unit	3766
Examiner Name	Not Yet Assigned
Attorney Docket Number	EMKNNZ00301

	165.	2004/0092860	05-13-2004	Dev et al.	
	166.	2004/0111139	06-10-2004	McCreery	
	167.	2004/0138517	07-15-2004	Osorio et al.	
	168.	2004/0146611	07-29-2004	Arias et al.	
	169.	2004/0147964	07-29-2004	Nolan et al.	
	170.	2004/0210254	10-21-2004	Burnett et al.	
	171.	2004/0210282	10-21-2004	Flock et al.	
	172.	2005/0029223	02-10-2005	Yeshurun	
	173.	2005/0099290	05-12-2005	Govari	
	174.	2005/0171576	08-04-2005	Williams et al.	
	175.	2005/0277998	12-15-2005	Tracey et al.	
	176.	2006/0004244	01-05-2006	Phillips et al.	
	177.	2006/0016452	01-26-2006	Goetz et al.	
	178.	2006/0052839	03-09-2006	Kim et al.	
	179.	2006/0084938	04-20-2006	Zhang et al.	
	180.	2006/0122454	06-08-2006	Riehl et al.	
	181.	2006/0122660	06-08-2006	Boveja et al.	
	182.	2006/0161039	07-20-2006	Juliana et al.	
	183.	2006/0199159	09-07-2006	Ghiron et al.	
	184.	2007/0021803	01-25-2007	Deem et al.	
	185.	2007/0027353	02-01-2007	Ghiron et al.	
	186.	2007/0027354	02-01-2007	Riehl et al.	
	187.	2007/0027355	02-01-2007	Riehl et al.	
	188.	2007/0142885	06-21-2007	Hantash et al.	
	189.	2007/0208212	09-06-2007	Dilorenzo	
	190.	2007/0276318	11-29-2007	Henley	
	191.	2007/0282246	12-06-2007	Henley	
	192.	2008/0063866	03-13-2008	Allen et al.	
	193.	2008/0114199	05-15-2008	Riehl et al.	
	194.	2008/0177128	07-24-2008	Riehl et al.	
	195.	2008/0183070	07-31-2008	Unal et al.	
	196.	2008/0200748	08-21-2008	Testani et al.	
	197.	2008/0224808	09-18-2008	Ghiron et al.	
	198.	2008/0262287	10-23-2008	Dussau	
	199.	2008/0306325	12-11-2008	Burnett et al.	
	200.	2008/0312725	12-18-2008	Penner	
	201.	2009/0073991	03-19-2009	Landrum et al.	
	202.	2009/0076336	03-19-2009	Mazar et al.	
	203.	2009/0076340	03-19-2009	Libbus et al.	
	204.	2009/0076344	03-19-2009	Libbus et al.	
	205.	2009/0076345	03-19-2009	Manicka et al.	
	206.	2009/0076363	03-19-2009	Bly et al.	

Examiner Signature	/Catherine Burk/	Date Considered	01/24/2013

ALL REFERENCES CONSIDERED EXCEPT WHERE LINED THROUGH. /C.B./

CUSTOMIZED PTO/SB/08a/b (07-05)

Substitute for form 1449/PTO				Complete If Known	
INFORMATION DISCLOSURE STATEMENT BY APPLICANT				Application Number	12/508,529
				Filing Date	July 23, 2009
				First Named Inventor	Daniel Rogers BURNETT
				Art Unit	3766
(Use as many sheets as necessary)				Examiner Name	Not Yet Assigned
Sheet	6	of	11	Attorney Docket Number	EMKNNZ00301

	207.	2009/0076364	03-19-2009	Libbus et al.	
	208.	2009/0076397	03-19-2009	Libbus et al.	
	209.	2009/0076410	03-19-2009	Libbus et al.	
	210.	2009/0076559	03-19-2009	Libbus et al.	
	211.	2009/0076565	03-19-2009	Surwit	
	212.	2009/0118777	05-07-2009	Iki et al.	
	213.	2009/0132018	05-21-2009	DiUbaldi et al.	
	214.	2009/0162570	06-25-2009	Swenberg et al.	
	215.	2009/0171236	07-02-2009	Davies	
	216.	2009/0227829	09-10-2009	Burnett et al.	
	217.	2009/0227831	09-10-2009	Burnett et al.	
	218.	2009/0234179	09-17-2009	Burnett et al.	
	219.	2009/0234410	09-17-2009	Libbus et al.	
	220.	2009/0264792	10-22-2009	Mazar	
	221.	2009/0292194	11-26-2009	Libbus et al.	
	222.	2010/0049021	02-25-2010	Jina et al.	
	223.	2010/0056881	03-04-2010	Libbus et al.	
	224.	2010/0160712	06-24-2010	Burnett et al.	
	225.	2010/0161005	06-24-2010	Wahlgren et al.	
	226.	2010/0204538	08-12-2010	Burnett et al.	
	227.	2010/0222629	09-02-2010	Burnett et al.	
	228.	2010/0222630	09-02-2010	Mangrum et al.	
	229.	2011/0021863	01-27-2011	Burnett et al.	
	230.	D571920	06-24-2008	Juliana et al.	

FOREIGN PATENT DOCUMENTS

Examiner Initials*	Cite No.[1]	Foreign Patent Document Country Code[3]-Number[4]-Kind Code[5] *(if known)*	Publication Date MM-DD-YYYY	Name of Patentee or Applicant of Cited Document	Pages, Columns, Lines, Where Relevant Passages or Relevant Figures Appear	T[6]
	231.	GB 0637560	05-24-1950	PANNELL		
	232.	GB 2298370	09-04-1996	THE MAGSTIM COMPANY LIMITED		
	233.	GB 2336544	10-27-1999	THE MAGSTIM COMPANY LIMITED		
	234.	WO 2003/070317	08-28-2003	THERA NOVA LLC		
	235.	WO 2008/032279	03-20-2008	KONINKLIJKE PHILIPS ELECTRONICS N.V.		
	236.	WO 2008/042902	04-10-2008	EMKINETICS, INC.		
	237.	WO 2008/115426	09-25-2008	BOSTON SCIENTIFIC NEUROMODULATION CORPORATION		
	238.	WO 2011/011748	01-27-2011	EMKINETICS, INC.		
	239.	WO 2011/011749	01-27-2011	EMKINETICS, INC.		

Examiner Signature	/Catherine Burk/	Date Considered	01/24/2013

ALL REFERENCES CONSIDERED EXCEPT WHERE LINED THROUGH. /C.B./

CUSTOMIZED PTO/SB/08a/b (07-05)

Substitute for form 1449/PTO				Complete If Known	
INFORMATION DISCLOSURE STATEMENT BY APPLICANT				Application Number	12/508,529
				Filing Date	July 23, 2009
				First Named Inventor	Daniel Rogers BURNETT
				Art Unit	3766
(Use as many sheets as necessary)				Examiner Name	Not Yet Assigned
Sheet	7	of	11	Attorney Docket Number	EMKNNZ00301

*EXAMINER: Initial if information considered, whether or not citation is in conformance with MPEP 609. Draw line through citation if not in conformance and not considered. Include copy of this form with next communication to applicant. [1] Applicant's unique citation designation number (optional). [2] See Kinds Codes of USPTO Patent Documents at www.uspto.gov or MPEP 901.04. [3] Enter Office that issued the document, by the two-letter code (WIPO Standard ST.3). [4] For Japanese patent documents, the indication of the year of the reign of the Emperor must precede the serial number of the patent document. [5] Kind of document by the appropriate symbols as indicated on the document under WIPO Standard ST. 16 if possible. [6] Applicant is to place a check mark here if English language Translation is attached.

NON PATENT LITERATURE DOCUMENTS			
Examiner Initials*	Cite No.[1]	Include name of the author (in CAPITAL LETTERS), title of the article (when appropriate), title of the item (book, magazine, journal, serial, symposium, catalog, etc.), date, page(s), volume-issue number(s), publisher, city and/or country where published.	T[2]
	240.	"Bioflex® RX754P, Single Coated Medical Pressure Sensitive Adhesive Tape," *Technical Data*, 2 pages, December 2005.	
	241.	3M Corporation, "3M™ XYZ/Isotropic Electrically Conductive Adhesive Transfer Tape 9707, *3M Electronics Markets Materials Division*, 60-5002-0350-4, 8 pages, 2004, 3M.	
	242.	AARON, Roy K. et al., "Therapeutic Effects of Electromagnetic Fields in the Stimulation of Connective Tissue Repair," *Journal of Cellular Biography*, 52(1):42-6, May 1993, Wiley-Liss, Inc.	
	243.	AmGel Technologies, "AG603 Sensing Gel, Sensing Gel Designed for ECG Applications," AG603-3/10, 1 page, 2010.	
	244.	AmGel Technologies, "AG702 Stimulating Gel, Stimulating Gel Designed for carbon film," AG702-02/06, 1 page, 2006.	
	245.	AmGel Technologies, "AG902-184/229 Grounding Gel, Grounding Gel Designed for Electrosurgical Pads," AG902 Series, 1 page, 2010.	
	246.	AmGel Technologies, "Release Films," 1 Page, July 25, 2006, Revision 1.	
	247.	Australian Patent Application No. 2007303223 filed October 2, 2007 in the name of EMKinetics, Inc., Office Action mailed September 7, 2010.	
	248.	BALMASEDA, Marion T. Jr., et al., "Burns in Functional Electric Stimulation: Two Case Reports," *Archives of Physical Medicine and Rehabilitation*, vol. 38., pp. 452-453, July 1987	
	249.	Biowave Corporation, "510(k) Summary for the Biowave Deepwave Neuromodulation Pain Therapy Device," 6 pages, Appendix B, December 13, 2005.	
	250.	Biowave Corporation, "510(k) Summary for the Biowave Deepwave Neuromodulation Pain Therapy Device," 7 pages, Appendix E, August 15, 2006.	
	251.	Biowave Corporation, "Percutaneous Neuromodulation Pain Therapy System," *deepwave*, RevB/080926, 2008.	
	252.	BlueCross BlueShield of Kansas City, "Percutaneous Electrical Nerve Stimulation (PENS) and Percutaneous Neuromodulation Therapy (PNT)," 7 pages, 1988.	
	253.	BODHALE, D.W. et al., "Design, fabrication and analysis of silicon microneedles for transdermal drug delivery applications," *Proceedings of the 3rd International Conference on the Development of BME in Vietnam*, pages 84-88, January 11-14 2010.	
	254.	BRUCE, C.J. et al., "Intracardiac Echocardiography," *European Journal*	

Examiner Signature	/Catherine Burk/	Date Considered	01/24/2013

ALL REFERENCES CONSIDERED EXCEPT WHERE LINED THROUGH. /C.B./

CUSTOMIZED PTO/SB/08a/b (07-05)

Substitute for form 1449/PTO

INFORMATION DISCLOSURE STATEMENT BY APPLICANT

(Use as many sheets as necessary)

Sheet	8	of	11

Complete If Known	
Application Number	12/508,529
Filing Date	July 23, 2009
First Named Inventor	Daniel Rogers BURNETT
Art Unit	3766
Examiner Name	Not Yet Assigned
Attorney Docket Number	EMKNNZ00301

		Echocardiography, Volume 2, pages 234-244, 2001, The European Society of Cardiology.	
	255.	CABODEVILA, G. et al., "An overview on drug delivery using microneedles", *Institute FEMTO-ST, Dept LPMO,* 24 pages, October 2005, Workshop Micro Dosing Systems.	
	256.	~~CERTIFIED PULSED SIGNAL THERAPY CENTERS, http://www.certifiedpst.com/, 10 pages.~~	
	257.	CHOI, S. et al., "Microneedle Electrode Array for Electroporation of Skin for Gene Therapy," 2 pages, 2005, Controlled Release Society 32nd Annual Meeting and Exposition TRANSACTIONS.	
	258.	CURLEY, S. et al., "Radiofrequency Ablation of Unresectable Primary and Metastatic Hepatic Malignancies," *Annals of Surgery*, Volume 230(1):1-8, 1999 Lippincott Williams & Wilkins, Inc.	
	259.	CystoMedix, Inc., "Percutaneous Tibial Nerve Stimulation via Urgent ® PC Neuromodulation System - An Emerging Technology for managing Overactive Bladder," *Business Briefing: Global Surgery*, 6 pages, 2004.	
	260.	~~EBI, L.P., EBI BONE HEALING SYSTEM, http://www.ebimedical.com/products/fracture/bonehealing.html, 5 pages.~~	
	261.	Fallon Community Health Plan, "Spinal Cord Stimulation," 4 pages, 2006.	
	262.	GRUNDFEST H. et al., "Stainless Steel Micro-Needle Electrodes Made by Electrolytic Pointing," *Review of Scientific Instruments*, Volume 21(4):2 pages, 1950, American Institute of Physics.	
	263.	HARVINDER S. Gill et al., "Effect of microneedle design on pain in human subjects," *NIH Public Access Author Manuscript*, 24(7): 585-594, September 2008, Clinical Journal of Pain.	
	264.	HUBER, D.E. et al., "Popliteal Vein Compression Under General Anaesthesia," *European Journal of Vascular and Endovascular Surgery*, Volume 37, pages 464-469, 2009, Elsevier Ltd.	
	265.	International Patent Application No. PCT/US2007/080196 in the name of EMKINETICS, INC. filed October 2, 2007, International Search Report and Written Opinion mailed April 24, 2008.	
	266.	International Patent Application No. PCT/US2010/043142 in the name of EMKINETICS, INC. filed July 23, 2010, International Search Report and Written Opinion mailed September 24, 2010.	
	267.	International Patent Application No. PCT/US2010/043143 in the name of EMKINETICS, INC. filed July 23, 2010, International Search Report and Written Opinion mailed September 15, 2010.	
	268.	International Patent Application No. PCT/US2010/054167 in the name of EMKINETICS, INC. filed October 26, 2010, International Search Report and Written Opinion mailed December 23, 2010.	
	269.	International Patent Application No. PCT/US2010/054353 in the name of EMKINETICS, INC. filed October 27, 2010, International Search Report and Written Opinion mailed December 28, 2010.	

Examiner Signature	/Catherine Burk/	Date Considered	01/24/2013

ALL REFERENCES CONSIDERED EXCEPT WHERE LINED THROUGH. /C.B./

CUSTOMIZED PTO/SB/08a/b (07-05)

Substitute for form 1449/PTO

INFORMATION DISCLOSURE STATEMENT BY APPLICANT

(Use as many sheets as necessary)

Sheet	9	of	11

Complete If Known	
Application Number	12/508,529
Filing Date	July 23, 2009
First Named Inventor	Daniel Rogers BURNETT
Art Unit	3766
Examiner Name	Not Yet Assigned
Attorney Docket Number	EMKNNZ00301

	270.	ISSEROFF, Roslyn R. et al., "Beta Adrenergic Receptor (βAR) Signaling as a novel target for optimizing skin wound healing", 5 pages.	
	271.	JACOBSON, Jerry I. et al., "Low-Amplitude, Extremely Low Frequency Magnetic Fields for the Treatment of Osteoarthritic Knees: A Double-Blind Clinical Study," *Electromagnetic Fields and Human Health. Fundamental and Applied Research*, pp. 363-364, September 17-24 2002, Proceedings of the Third International Conference.	
	272.	JASPER, H. et al., "Unipolar Electromyograms of Normal and Denervated Human Muscle," pages 231-244, October 12, 1948, Department of Neurology and Neurosurgery, McGill University, and Montreal Neurological Institute.	
	273.	KRAVITZ, S. et al., "Microneedles for *In-Situ/In-vivo* Electrochemical Sensor Applications, 1 page, Sandia National Laboratories.	
	274.	KURTZKE, John F., "Epidemiology of Spinal Cord Injury," *IV Panamerican Congress of Neurology*, 18(2-3): 157-90, 93, 1975.	
	275.	LIN et al., "Magnetic Stimulation of the Bladder in Dogs," AAEM Annual Meeting 1993, *Muscle & Nerve,* October 1993 (Abstract)	
	276.	LUTTGE, R. "Microneedle array electrode for human EEG recording," IFMBE Proceedings 22, pages 1246-1249, 2008, Springer-Verlag Berlin Heidelberg 2009.	
	277.	MAASS et al., "Contactless Nerve Stimulation and Signal Detection by Inductive Transducer," *Symposium on Application of Magnetism in Bioengineering*, 1969.	
	278.	MCFARLANE, J.P. et al., "Acute Suppression of Idiopathic Detrusor Instability with Magnetic Stimulation of the Sacral Nerve Roots," *British Journal of Urology*, 80(5): 734-41, November 1997.	
	279.	MORRISON, P.R. et al., "Radiofrequency Ablation of Thoracic Lesions: Part I, Experiments in the Normal Porcine Thorax," *American Journal of Roentgenology*, 2005;184:375–380, February 2005, American Roentgen Ray Society.	
	280.	NeuroStar TMS Therapy, "NeuroStar TMS Therapy® Recipient of Medical Design Excellence Award, *PRNewswire*, 3 pages, April 2009.	
	281.	Newmark, Inc., "Standard Products, Highest Quality Components, Designed & Produced Exclusively for Electrode Manufacturers," *Innovation by Design Newmark*, 2 pages, www.newmarkine.com/std_prods.htm, printed on May 3, 2010.	
	282.	NOBLE, J.H. et al., "Automatic segmentation of the facial nerve and chorda tympani in CT images using spatially dependent features values", Medical Phsysics, Volume 35(12), pages 5375-5384, December 2008, American Association Physical Medicine.	
	283.	PATEL, G. et al., "Microneedles: The option for painless delivery," www.pharmainfo.net/reviews/microneedles-option-painless-delivery, 6 pages, printed on September 9, 2008.	
	284.	*PubMed, U.S. National Library of Medicine National Institutes of Health*, microneedle array electrode - Pub Med results, www.ncbi.nlm.nig.gov/sites/entrez, 2 pages, Search performed on April 22, 2010.	
	285.	*PubMed, U.S. National Library of Medicine National Institutes of Health*, microneedle electrode - Pub Med results, www.ncbi.nlm.nig.gov/sites/entrez, 7 pages, Search performed on April 22, 2010.	
	286.	SCHAEFER, O. et al., "CT-guided radiofrequency ablation of a bronchogenic	

Examiner Signature	/Catherine Burk/	Date Considered	01/24/2013

ALL REFERENCES CONSIDERED EXCEPT WHERE LINED THROUGH. /C.B./

CUSTOMIZED PTO/SB/08a/b (07-05)

Substitute for form 1449/PTO **INFORMATION DISCLOSURE STATEMENT BY APPLICANT** *(Use as many sheets as necessary)*				*Complete If Known*	
				Application Number	12/508,529
				Filing Date	July 23, 2009
				First Named Inventor	Daniel Rogers BURNETT
				Art Unit	3766
				Examiner Name	Not Yet Assigned
Sheet	10	of	11	Attorney Docket Number	EMKNNZ00301

		carcinoma," *The British Journal of Radiology*, 76 (2003), pages 268-270, 2003, The British Institute of Radiology.	
	287.	SHAFIK, Ahmed, "Magnetic Stimulation: A Novel Method for Inducing Evacuation of the Neuropathic Rectum and Urinary Bladder in a Canine Model," *Urology* 54(2): 368-372, August 1999.	
	288.	SHERIDAN, MT. et al., "Pretreatment apoptosis in carcinoma of the cervix correlates with changes in tumour oxygenation during radiotherapy," *British Journal of Cancer*, 82(6):1177-1182, 2000 Cancer Research Campaign.	
	289.	SIVAGANGABALAN, G. et al., "Comparison of Electroanatomic Contact and Noncontact Mapping of Ventricular Scar in a Postinfarct Ovine Model With Intramural Needle Electrode Recording and Histological Validation," *Circulation: Arrhythmia and Electrophysiology, Journal of the American Heart Association*, Volume 1:363-369, 2008, American Heart Association.	
	290.	SOLBIATI, L. et al., "Percutaneous US-guided Radio-Frequency Tissue Ablation of Liver Metastases: Treatment and Follow-up in 16 Patients," *Radiology*, 202(1):195-203, 1997 L.S. RSNA.	
	291.	The Magstim Company Ltd, "Air Film Coil," *Magstim*, 4 pages, 2007.	
	292.	THON, W.F. et al., "Neuromodulation of voiding dysfunction and pelvic pain," *World Journal of Urology*, Volume 9: pages 138-141, 1991, Springer-Verlag.	
	293.	TROCK, David H., "Electromagnetic Fields and Magnets Investigational Treatment for Musculoskeletal Disorders," *Rheumatic Diseases Clinics of North America*, vol. 26, No. 1., February 2000.	
	294.	TROCK, David H., et al., "The Effect of Pulsed Electromagnetic Fields in the Treatment of Osteoarthritis of the Knee and Cervical Spine. Report of Randomized, Double Blind, Placebo Controlled Trials," *The Journal of Rheumatology*, 1903-1911, 1994.	
	~~295.~~	~~Tyco Adhesives, "2932 Designed Adhesives," *Specialty Tape Group*, 1 page.~~	
	296.	U.S. Patent Application No. 12/815,348 filed June 14, 2010 in the name of Reydel et al., non-final Office Action dated February 14, 2011.	
	297.	U.S. Patent Application No.10/077,434 filed February 19, 2002 in the name of Burnett et al., non-final Office Action mailed July 2, 2003.	
	298.	U.S. Patent Application No.10/077,434 filed February 19, 2002 in the name of Burnett et al., Notice of Allowance mailed October 17, 2003.	
	299.	U.S. Patent Application No.11/332,797 filed January 27, 2006 in the name of Mangrum et al., final Office Action mailed July 27, 2009.	
	300.	U.S. Patent Application No.11/866,329 filed October 2, 2007 in the name of Burnett et al., final Office Action mailed March 16, 2010.	
	301.	U.S. Patent Application No.11/866,329 filed October 2, 2007 in the name of Burnett et al., non-final Office Action mailed June 10, 2009.	
	302.	U.S. Patent Application No.12/469,365 filed May 20, 2009 in the name of Mangrum et al., non-final Office Action mailed August 27, 2010.	
	303.	U.S. Patent Application No.12/695,087 filed January 27, 2010 in the name of Mangrum et al., non-final Office Action mailed December 23, 2010.	

Examiner Signature	/Catherine Burk/	Date Considered	01/24/2013

ALL REFERENCES CONSIDERED EXCEPT WHERE LINED THROUGH. /C.B./

CUSTOMIZED PTO/SB/08a/b (07-05)

Substitute for form 1449/PTO				Complete If Known	
INFORMATION DISCLOSURE STATEMENT BY APPLICANT				Application Number	12/508,529
				Filing Date	July 23, 2009
				First Named Inventor	Daniel Rogers BURNETT
				Art Unit	3766
(Use as many sheets as necessary)				Examiner Name	Not Yet Assigned
Sheet	11	of	11	Attorney Docket Number	EMKNNZ00301

	304.	vanSonnenberg, E. et al., "Radiofrequency Ablation of Thoracic Lesions: Part 2, Initial Clinical Experience—Technical and Multidisciplinary Considerations in 30 Patients," *American Journal of Roentgenology*, 2005;184:381–390, February 2005, American Roentgen Ray Society.	
	305.	WANICH, T. et al, "A Randomized Placebo-Controlled Study To Determine Safety and Efficacy In Terms Of Pain Reduction, Increased Range Of Motion, And Reduced Pain Medications, For A Novel Percutaneous Neuromodulation Pain Therapy Device ("Deepwave®") Following Post-Operative Treatments For Total Knee Replacement Procedures,"American Academy of Orthopaedic Surgeons 2009 Annual Meeting", 6 pages, February 25-28, 2008, Biowave Corporation.	
	306.	WARWICK, K. et al., "The Application of Implant Technology for Cybernetic Systems," *Archives of Neurology*, Volume 60:1369-1373, October 2003, American Medical Association.	
	307.	WIJKSTRDA et al., "Selective Stimulation and Blocking of Sacral Nerves: Research Setup and Preliminary Results," *Annual International Conference of the IEEE Engineering in Medicine and Biology Society*, Vol. 13, No. 2, 1991.	
	308.	WILKE, N. et al., "Fabrication and Characterisation of Microneedle Electrode Arrays using Wet Etch Technologies," 5 pages, October 20-21 2004, EMN04, NMRC, University College.	
	309.	ZHAO, M., "Genetic Analysis of Electric Signal-directed Cell Movement," 33 pages, April 8, 2008, Modelling Complex Biological Systems in the Context of Genomics.	
	310.	Zoll Lifecor Corporation, "What is the LifeVest Wearable Defibrillator," http://www.lifecor.com/about_lifevest/about.asp#, 1 page, printed on January 7, 2011.	

*EXAMINER: Initial if reference considered, whether or not citation is in conformance with MPEP 609. Draw line through citation if not in conformance and not considered. Include copy of this form with next communication to applicant.

[1]Applicant's unique citation designation number (optional). [2]Applicant is to place a check mark here if English language Translation is attached.

Examiner Signature	/Catherine Burk/	Date Considered	01/24/2013

ALL REFERENCES CONSIDERED EXCEPT WHERE LINED THROUGH. /C.B./

Index of Claims	Application/Control No.	Applicant(s)/Patent Under Reexamination
	12508529	BURNETT ET AL.
	Examiner	**Art Unit**
	CATHERINE E BURK	3735

✓	Rejected	-	Cancelled	N	Non-Elected	A	Appeal
=	Allowed	÷	Restricted	I	Interference	O	Objected

☐ Claims renumbered in the same order as presented by applicant ☐ CPA ☐ T.D. ☐ R.1.47

CLAIM		DATE								
Final	Original	06/27/2012	01/24/2013							
	1	÷	N							
	2	÷	N							
	3	÷	N							
	4	÷	N							
	5	÷	N							
	6	÷	N							
	7	÷	N							
	8	÷	N							
	9	÷	N							
	10	÷	N							
	11	÷	N							
	12	÷	N							
	13	÷	N							
	14	÷	N							
	15	÷	N							
	16	÷	N							
	17	÷	N							
	18	÷	N							
	19	÷	✓							
	20	÷	✓							
	21	÷	✓							
	22	÷	✓							
	23	÷	✓							
	24	÷	✓							
	25	÷	✓							
	26	÷	✓							
	27	÷	✓							
	28	÷	✓							
	29	÷	✓							
	30	÷	✓							
	31	÷	✓							
	32	÷	✓							
	33	÷	✓							
	34	÷	✓							
	35	÷	N							
	36	÷	N							

Index of Claims	Application/Control No.	Applicant(s)/Patent Under Reexamination
	12508529	BURNETT ET AL.
	Examiner	**Art Unit**
	CATHERINE E BURK	3735

✓	Rejected	-	Cancelled	N	Non-Elected	A	Appeal
=	Allowed	÷	Restricted	I	Interference	O	Objected

☐ Claims renumbered in the same order as presented by applicant ☐ CPA ☐ T.D. ☐ R.1.47

CLAIM		DATE								
Final	Original	06/27/2012	01/24/2013							
	37	÷	N							
	38	÷	N							
	39	÷	N							
	40	÷	N							
	41	÷	N							
	42	÷	N							
	43	÷	N							
	44	÷	N							
	45	÷	N							
	46	÷	N							
	47	÷	N							
	48	÷	N							
	49	÷	N							
	50	÷	N							
	51	÷	N							
	52	÷	N							
	53	÷	N							
	54	÷	N							

Search Notes	Application/Control No.	Applicant(s)/Patent Under Reexamination
	12508529	BURNETT ET AL.
	Examiner	**Art Unit**
	CATHERINE E BURK	3735

CPC- SEARCHED

Symbol	Date	Examiner

CPC COMBINATION SETS - SEARCHED

Symbol	Date	Examiner

US CLASSIFICATION SEARCHED

Class	Subclass	Date	Examiner
600	9-15	1/24/2013	CEB

SEARCH NOTES

Search Notes	Date	Examiner
EAST Text	1/24/2013	CEB
IDS	1/24/2013	CEB
Inventor Names	1/24/2013	CEB
Class/Subclass	1/24/2013	CEB
Forward/Backward	1/24/2013	CEB

INTERFERENCE SEARCH

US Class/ CPC Symbol	US Subclass / CPC Group	Date	Examiner

/C.E.B./ Examiner.Art Unit 3735	

CUSTOMIZED PTO/SB/08a/b (07-05)

Substitute for form 1449/PTO

INFORMATION DISCLOSURE STATEMENT BY APPLICANT

(Use as many sheets as necessary)

Sheet	1	of	1

Complete If Known	
Application Number	12/508,529
Filing Date	July 23, 2009
First Named Inventor	Daniel Rogers BURNETT
Art Unit	3766
Examiner Name	Not Yet Assigned
Attorney Docket Number	EMKNNZ00301

U.S. PATENT DOCUMENTS

Examiner Initials*	Cite No.[1]	Document Number Number-Kind Code[2] *(if known)*	Publication Date MM-DD-YYYY	Name of Patentee or Applicant of Cited Document	Pages, Columns, Lines, Where Relevant Passages or Relevant Figures Appear

FOREIGN PATENT DOCUMENTS

Examiner Initials*	Cite No.[1]	Foreign Patent Document Country Code[3]-Number[4]-Kind Code[5] *(if known)*	Publication Date MM-DD-YYYY	Name of Patentee or Applicant of Cited Document	Pages, Columns, Lines, Where Relevant Passages or Relevant Figures Appear	T[6]

*EXAMINER: Initial if information considered, whether or not citation is in conformance with MPEP 609. Draw line through citation if not in conformance and not considered. Include copy of this form with next communication to applicant. [1] Applicant's unique citation designation number (optional). [2] See Kinds Codes of USPTO Patent Documents at www.uspto.gov or MPEP 901.04. [3] Enter Office that issued the document, by the two-letter code (WIPO Standard ST.3). [4] For Japanese patent documents, the indication of the year of the reign of the Emperor must precede the serial number of the patent document. [5] Kind of document by the appropriate symbols as indicated on the document under WIPO Standard ST. 16 if possible. [6] Applicant is to place a check mark here if English language Translation is attached.

NON PATENT LITERATURE DOCUMENTS

Examiner Initials*	Cite No.[1]	Include name of the author (in CAPITAL LETTERS), title of the article (when appropriate), title of the item (book, magazine, journal, serial, symposium, catalog, etc.), date, page(s), volume-issue number(s), publisher, city and/or country where published.	T[2]
	1.	U.S. Patent Application No. 12/509,304 filed July 24, 2009 in the name of Burnett et al., non-final Office Action mailed February 14, 2011.	

*EXAMINER: Initial if reference considered, whether or not citation is in conformance with MPEP 609. Draw line through citation if not in conformance and not considered. Include copy of this form with next communication to applicant.

[1]Applicant's unique citation designation number (optional). [2]Applicant is to place a check mark here if English language Translation is attached.

Examiner Signature	/Catherine Burk/	Date Considered	01/24/2013

ALL REFERENCES CONSIDERED EXCEPT WHERE LINED THROUGH. /C.B./

EAST Search History

EAST Search History (Prior Art)

Ref #	Hits	Search Query	DBs	Default Operator	Plurals	Time Stamp
L1	23913	(patch or electrode) with (needle or microneedle or nanoneedle or barb or spike)	US-PGPUB; USPAT; USOCR	OR	ON	2013/01/24 18:45
L2	22933	tip near5 (bulb or bulbous or sphere or spheric$ or ball)	US-PGPUB; USPAT; USOCR	OR	ON	2013/01/24 18:45
L3	542	L1 and L2	US-PGPUB; USPAT; USOCR	OR	ON	2013/01/24 18:45
L4	748	(needle or microneedle or nanoneedle or barb or spike) with tip near5 (bulb or bulbous or sphere or spheric$ or ball)	US-PGPUB; USPAT; USOCR	OR	ON	2013/01/24 18:46
L5	37933	1 adn 4	US-PGPUB; USPAT; USOCR	OR	ON	2013/01/24 18:46
L6	131	1 and 4	US-PGPUB; USPAT; USOCR	OR	ON	2013/01/24 18:46
L7	19	("3490439" | "3896790" | "4353372" | "4926879" | "4969468" | "5143079" | "5184620" | "5215088" | "5361760" | "5452718" | "5482038" | "5509822" | "5810742" | "5928159" | "5928458" | "6055448" | "6128521" | "6745062").PN. OR ("7103398").URPN.	US-PGPUB; USPAT; USOCR	OR	ON	2013/01/24 18:51
L8	173	("5215088").URPN.	USPAT	OR	ON	2013/01/24 18:53
L9	20587	(electrode) with (needle or microneedle or nanoneedle or spike)	US-PGPUB; USPAT; USOCR	OR	ON	2013/01/24 19:00
L10	19683	(needle or microneedle or nanoneedle or barb or spike) near10 (bulb or bulbous or sphere or spheric$ or ball)	US-PGPUB; USPAT; USOCR	OR	ON	2013/01/24 19:01
L11	14504	(needle or microneedle or nanoneedle or barb or spike) near5 (bulb or bulbous or sphere or spheric$ or ball)	US-PGPUB; USPAT; USOCR	OR	ON	2013/01/24 19:01
L12	582	9 and 11	US-PGPUB; USPAT; USOCR	OR	ON	2013/01/24 19:01

L13	476	12 not 6	US-PGPUB; USPAT; USOCR	OR	ON	2013/01/24 19:01
L14	152	13 and (skin or $cutaneous)	US-PGPUB; USPAT; USOCR	OR	ON	2013/01/24 19:02
S1	761	loeb.in.	US-PGPUB; USPAT; USOCR	OR	ON	2012/06/20 15:15
S2	73	S1 and stimulator	US-PGPUB; USPAT; USOCR	OR	ON	2012/06/20 15:15
S3	1	("7798954").PN.	US-PGPUB; USPAT; USOCR	OR	OFF	2012/06/20 16:51
S4	1	(12/508529).APP.	US-PGPUB; USPAT; USOCR	OR	OFF	2013/01/24 09:51
S5	1	(11/866329).APP.	US-PGPUB; USPAT; USOCR	OR	OFF	2013/01/24 10:32
S6	102	(daniel near2 burnett).in.	US-PGPUB; USPAT; USOCR	OR	ON	2013/01/24 10:36
S7	7	S6 and (microneedle near5 (patch or array))	US-PGPUB; USPAT; USOCR	OR	ON	2013/01/24 10:36
S8	1	("20070021803").PN.	US-PGPUB; USPAT; USOCR	OR	OFF	2013/01/24 10:40
S9	1	("6690959").PN.	US-PGPUB; USPAT; USOCR	OR	OFF	2013/01/24 10:41
S10	1	("20050143789").PN.	US-PGPUB; USPAT; USOCR	OR	OFF	2013/01/24 10:42
S11	1	("20060135844").PN.	US-PGPUB; USPAT; USOCR	OR	OFF	2013/01/24 10:46
S12	257	("20020099323" | "20050277998" | "20060122660" | "20080063866" | "20080114199" | "20090073991" | "20090076345" | "20090076559" | "20090227831" | "20100161005" | "5690693" | "6029090" | "6086525" | "6088619" | "6200259" | "6603987" |	US-PGPUB; USPAT; USOCR	OR	ON	2013/01/24 10:50

"6611707" | "6654636" | "6663820" |
"6808506" | "6931277" | "7117034" |
"7320664" | "7591806" | "7658728" |
"20050283202" | "7032302" |
"20020082465" | "20030028072" |
"20060122454" | "20070027353" |
"20070276318" | "20090076336" |
"20090234410" | "20110021863" |
"4915110" | "6349233" | "6471903" |
"6493588" | "6743211" | "6908453" |
"7130696" | "7226439" | "7497980" |
"7530968" | "D571920" | "20060199159" |
"20070282246" | "20080262287" |
"4456012" | "5314453" | "5449378" |
"5518495" | "5984854" | "6491620" |
"6511463" | "6533949" | "6582393" |
"6652478" | "6684106" | "6701185" |
"6866659" | "6941171" | "6972013" |
"7013179" | "7416541" | "7500911" |
"7556615" | "7572405" | "7578954" |
"7627938" | "20040010276" |
"20040122787" | "20050021104" |
"20060276702" | "20080004484" |
"20100022864" | "20040147964" |
"20060052839" | "20070027355" |
"20070208212" | "20080177128" |
"20080183070" | "20080306325" |
"20090118777" | "20090264792" |
"20090292194" | "20100056881" |
"20100160712" | "20100222630" |
"3817254" | "4428366" | "4940453" |
"5000178" | "5401233" | "5792209" |
"6179770" | "6451240" | "6503231" |
"6591124" | "6623457" | "6770480" |
"6899838" | "6926660" | "6939311" |
"6960193" | "7027478" | "7048723" |
"7115108" | "7285113" | "7396326" |
"7410476" | "7582069" | "20030144625" |
"20050143783" | "20110295100" |
"5978712" | "2893392" | "20040092860" |
"20040111139" | "20060016452" |
"20090076565" | "20090162570" |
"20100204538" | "4804054" | "5725471" |
"5766124" | "6024691" | "6066084" |
"6143035" | "6256533" | "6261221" |
"6334856" | "6500110" | "6527694" |
"6565532" | "6671527" | "6790372" |
"6881203" | "6962772" | "6980855" |
"7079355" | "7104947" | "7315758" |
"7415299" | "7473244" | "7647112" |
"7648484" | "20020111777" |
"20040138517" | "20040210282" |
"20050029223" | "20060004244" |
"20060161039" | "20070021803" |
"20070027354" | "20080200748" |
"20080312725" | "20090076340" |
"20090076410" | "20090171236" |
"20090234179" | "20100222629" |
"3034507" | "4784737" | "5092835" |
"6537242" | "6678556" | "6835184" |
"7344499" | "7367936" | "7429333" |
"7481337" | "7520848" | "7556821" |
"7570992" | "7651946" | "20040173220" |
"20050203602" | "20070265489" |

		"3841305" | "4926878" | "20030158583" | "20030158585" | "20040146611" | "20050099290" | "20050171576" | "20070142885" | "20090076363" | "20090076364" | "20090076397" | "20090132018" | "20100049021" | "5014699" | "5181902" | "5749909" | "5833600" | "5857957" | "6032677" | "6123658" | "6219575" | "6312612" | "6379324" | "6440096" | "6473652" | "6553263" | "6558361" | "6652443" | "6663556" | "6697669" | "6767341" | "6770022" | "7045069" | "7132054" | "7153256" | "7262068" | "7273474" | "7316665" | "7332197" | "7332339" | "7560036" | "20050143789" | "20070250162" | "7187976" | "20020133129" | "20030216729" | "20040210254" | "20060084938" | "20080224808" | "20090076344" | "20090227829" | "4548208" | "4574809" | "5314401" | "5715837" | "5792187" | "6009878" | "6155966" | "6190893" | "6213933" | "6443883" | "6595947" | "6656147" | "6689100" | "6690959" | "6735474" | "7047070" | "7083592" | "7574256" | "7588552" | "20060135844" | "4266533" | "5309909" | "5562707" | "6366795").PN.				
S13	1	("6161039").PN.	US-PGPUB; USPAT; USOCR	OR	OFF	2013/01/24 11:03
S14	1386	(whitehurst or loeb).in.	US-PGPUB; USPAT; USOCR	OR	ON	2013/01/24 13:04
S15	247	S14 and $stimulator	US-PGPUB; USPAT; USOCR	OR	ON	2013/01/24 13:04
S16	1939	(600/9-15).CCLS.	US-PGPUB; USPAT; USOCR	OR	OFF	2013/01/24 13:08
S17	43980	electric$5 near5 stimulat$	US-PGPUB; USPAT; USOCR	OR	ON	2013/01/24 13:09
S18	453	S16 and S17	US-PGPUB; USPAT; USOCR	OR	ON	2013/01/24 13:09
S19	45775	($cutaneous$ or skin) near5 (patch or electrode)	US-PGPUB; USPAT; USOCR	OR	ON	2013/01/24 13:11
S20	8434	S17 and S19	US-PGPUB; USPAT; USOCR	OR	ON	2013/01/24 13:13

S21	6044	S20 and (nerve or neuron or neural)	US-PGPUB; USPAT; USOCR	OR	ON	2013/01/24 13:14
S22	115	S18 and S19	US-PGPUB; USPAT; USOCR	OR	ON	2013/01/24 13:14
S23	12212	(electric$5 near5 stimulat$) with (nerve neuron neural neuro)	US-PGPUB; USPAT; USOCR	OR	ON	2013/01/24 13:45
S24	3722	S19 and S23	US-PGPUB; USPAT; USOCR	OR	ON	2013/01/24 13:45
S25	23913	(patch or electrode) with (needle or microneedle or nanoneedle or barb or spike)	US-PGPUB; USPAT; USOCR	OR	ON	2013/01/24 13:46
S26	1081	S24 and S25	US-PGPUB; USPAT; USOCR	OR	ON	2013/01/24 13:46
S27	20089	(patch or electrode) with (needle or microneedle or nanoneedle)	US-PGPUB; USPAT; USOCR	OR	ON	2013/01/24 13:46
S28	999	S24 and S27	US-PGPUB; USPAT; USOCR	OR	ON	2013/01/24 13:46
S29	113941	(sense sensor sensed sensing detect detecting detector detected) near5 (conduction conductiv$ stimulat$)	US-PGPUB; USPAT; USOCR	OR	ON	2013/01/24 13:48
S31	487	S28 and S29	US-PGPUB; USPAT; USOCR	OR	ON	2013/01/24 13:49
S32	167	("3755704" | "4016886" | "4350164" | "4513308" | "4551149" | "B453031").PN. OR ("4837049").URPN.	US-PGPUB; USPAT; USOCR	OR	ON	2013/01/24 13:53
S33	11	(james near2 malaney).in.	US-PGPUB; USPAT; USOCR	OR	ON	2013/01/24 15:48
S34	22933	tip near5 (bulb or bulbous or sphere or spheric$ or ball)	US-PGPUB; USPAT; USOCR	OR	ON	2013/01/24 15:49
S35	542	S25 and S34	US-PGPUB; USPAT; USOCR	OR	ON	2013/01/24 15:51
S36	76	S35 and S23	US-PGPUB; USPAT;	OR	ON	2013/01/24 15:51

			USOCR			
S37	36728	plurality with (needle or microneedle or nanoneedle or spike)	US-PGPUB; USPAT; USOCR	OR	ON	2013/01/24 16:03
S38	12318	plurality near (needle or microneedle or nanoneedle or spike)	US-PGPUB; USPAT; USOCR	OR	ON	2013/01/24 16:04
S39	1503	S25 and S38	US-PGPUB; USPAT; USOCR	OR	ON	2013/01/24 16:04
S40	122	S39 and S29	US-PGPUB; USPAT; USOCR	OR	ON	2013/01/24 16:04
S41	114	S40 not S36	US-PGPUB; USPAT; USOCR	OR	ON	2013/01/24 16:04
S42	1	("6735474").PN.	US-PGPUB; USPAT; USOCR	OR	OFF	2013/01/24 16:06

1/ 24/ 2013 7:54:20 PM
C:\ Users\ cburk\ Documents\ EAST\ Workspaces\ 12508529.wsp

UNITED STATES PATENT AND TRADEMARK OFFICE

UNITED STATES DEPARTMENT OF COMMERCE
United States Patent and Trademark Office
Address: COMMISSIONER FOR PATENTS
P.O. Box 1450
Alexandria, Virginia 22313-1450
www.uspto.gov

BIB DATA SHEET

CONFIRMATION NO. 8186

SERIAL NUMBER	FILING or 371(c) DATE	CLASS	GROUP ART UNIT	ATTORNEY DOCKET NO.
12/508,529	07/23/2009 **RULE**	600	3735	EMKNNZ00301

APPLICANTS

Daniel Rogers Burnett, San Francisco, CA;
Christopher Hermanson, Santa Cruz, CA;

**** CONTINUING DATA ***************************

This application is a CIP of 11/866,329 10/02/2007
which claims benefit of 60/848,720 10/02/2006

**** FOREIGN APPLICATIONS ***************************

**** IF REQUIRED, FOREIGN FILING LICENSE GRANTED **** ** SMALL ENTITY **
08/04/2009

Foreign Priority claimed ☐ Yes ☑ No 35 USC 119(a-d) conditions met ☐ Yes ☐ No Verified and Acknowledged /CATHERINE E BURK/ Examiner's Signature	☐ Met after Allowance Initials	STATE OR COUNTRY	SHEETS DRAWINGS	TOTAL CLAIMS	INDEPENDENT CLAIMS
		CA	24	54	7

ADDRESS

LEVINE BAGADE HAN LLP
2400 GENG ROAD, SUITE 120
PALO ALTO, CA 94303
UNITED STATES

TITLE

METHOD AND APPARATUS FOR MAGNETIC INDUCTION THERAPY

FILING FEE RECEIVED		
1851	FEES: Authority has been given in Paper No._____ to charge/credit DEPOSIT ACCOUNT No._____ for following:	☐ All Fees ☐ 1.16 Fees (Filing) ☐ 1.17 Fees (Processing Ext. of time) ☐ 1.18 Fees (Issue) ☐ Other _____ ☐ Credit

I hereby certify that this correspondence is being electronically transmitted to the USPTO on the date shown below.

Date: January 2, 2013 Signature: /Laura L. Gallagher/ (Laura L. Gallagher)

IN THE UNITED STATES PATENT AND TRADEMARK OFFICE

Application No.:	12/508,529
Confirmation No.:	8186
Filing Date:	July 23, 2009
Inventor(s):	Daniel R. BURNETT et al.
Title:	METHOD AND APPARATUS FOR MAGNETIC INDUCTION THERAPY
Examiner:	Catherine E. Burk
Group Art Unit:	3735

RESPONSE TO RESTRICTION REQUIREMENT

Mail Stop Amendment
Commissioner for Patents
P.O. Box 1450
Alexandria, VA 22313-1450

Sir:

This is in response to the restriction requirement set forth in the Office Action mailed July 2, 2012 for which a response was due on August 2, 2012. Filed herewith is a Petition and fee for a 5-month extension of time, thereby extending the deadline for response to January 2, 2013. Accordingly, this response is timely filed.

Amendments to the Claims are reflected in the listing of claims which begins on page 2 of this paper.

Remarks begin on page 10 of this paper.

AMENDMENTS TO THE CLAIMS

This listing of claims will replace all prior versions, and listings, of claims in the application:

In the claims

1. (Withdrawn): An energy emitting system for providing a medical therapy comprising:

at least one conductive coil disposed within or along a housing, where the at least one coil is configured to generate a magnetic field focused on a target nerve in proximity to the at least one coil;

at least one sensor configured to detect electrical conduction in the target nerve or muscle stimulation, wherein the sensor is comprised of a microneedle array attachable to a skin surface in proximity to a target nerve or muscle; and

a controller coupled to said at least one conductive coil and in communication with said at least one sensor.

2. (Withdrawn): The system of claim 1, wherein the magnetic field generated by said at least one conductive coil is varied based on the electrical conduction or muscle stimulation detected by said at least one sensor to ensure adequate therapeutic stimulation.

3. (Withdrawn): The system of claim 1, wherein the microneedle array is arrayed over a housing.

4. (Withdrawn): The system of claim 3, wherein the housing is comprised of a patch having at least one electrode and said microneedle array extends from a first surface of the electrode.

5. (Withdrawn): The system of claim 4, wherein the patch comprises a positive, negative and control electrode, each electrode comprising a microneedle array extending therefrom.

6. (Withdrawn): The system of claim 4, wherein the microneedle array is etched from a surface of the electrode.

7. (Withdrawn): The system of claim 1, wherein said microneedle array comprises at least one microneedle comprising an electrically conductive material such that it can transmit an electrical signal to an overlying electrode.

8. (Withdrawn): The system of claim 7, wherein said microneedle comprises metal, silicon, biocompatible polymers, titanium, silver, or suture material.

9. (Withdrawn): The system of claim 1, wherein said microneedle array comprises at least one microneedle coated with an electrically conductive material such that it can transmit an electrical signal to an overlying electrode.

10. (Withdrawn): The system of claim 1, wherein said microneedle array comprises at least one microneedle comprising a distal tip and a bulb extending from said distal tip to provide for anchoring of said microneedle into a subject's skin.

11. (Withdrawn): The system of claim 1, wherein said microneedle array comprises at least one microneedle having a diameter in the range of about 1 to 100 microns.

12. (Withdrawn): The system of claim 11, wherein a diameter of said microneedle is in the range of about 10 to 30 microns.

13. (Withdrawn): The system of claim 1, wherein said microneedle array comprises at least one microneedle having a length in the range of about 1 to 100 microns.

14. (Withdrawn): The system of claim 13, wherein a length of said microneedle is in the range of about 100 to 150 microns.

15. (Withdrawn): The system of claim 1, further comprising an electrode needle coupled to said controller and having an end insertable into a subject's body in proximity to a stimulation site, wherein said needle is inductively coupled to said at least one conductive coil.

16. (Withdrawn): The system of claim 15, wherein said at least one conductive coil is positioned distal to said stimulation site such that upon activation of said controller a current traverses the stimulation site by passing from said at least one conductive coil to said percutaneous electrode needle.

17. (Withdrawn): The system of claim 16, further comprising at least one conductive microneedle patch positioned distal to said stimulation site and coupled to the controller such that upon activation of said controller a current traverses the stimulation site by passing from said at least one conductive microneedle patch and said at least one conductive coil to said electrode needle.

18. (Withdrawn): An energy emitting system for providing a medical therapy comprising:

at least one conductive coil disposed within or along a housing, where the at least one coil is configured to generate a magnetic field focused on a target nerve in proximity to the at least one coil;

at least one sensor configured to detect electrical conduction in the target nerve or muscle stimulation, wherein the sensor is comprised of at least one microneedle comprising an electrically conductive material such that it can transmit an electrical signal to an overlying electrode and a distal tip having a bulb extending from said distal tip to provide for anchoring of said microneedle into a subject's skin; and

a controller coupled to said at least one conductive coil and in communication with said at least one sensor.

19. (Original): An energy emitting system for providing a medical therapy comprising:

at least one microneedle patch comprised of a microneedle array deposited on a surface of at least one electrode, where said at least one microneedle patch is configured to generate an electrical or magnetic stimulus focused on a target nerve in proximity to the at least one conductive microneedle patch; and

a controller coupled to said at least one microneedle patch.

20. (Original): The system of claim 19, further comprising at least one sensor configured to detect the electrical conduction in the target nerve or muscle stimulation and attachable to a skin surface in proximity to a target nerve or muscle.

21. (Original): The system of claim 20, wherein the electrical or magnetic stimulus generated by said at least one microneedle patch is varied according to the electrical

conduction or muscle stimulation detected by said at least one sensor to ensure adequate therapeutic stimulation.

22. (Original): The system of claim 19, wherein the microneedle array is etched from a surface of the electrode.

23. (Original): The system of claim 19, wherein said microneedle patch comprises at least one microneedle comprising an electrically conductive material such that it can transmit an electrical signal to an overlying electrode.

24. (Original): The system of claim 23, wherein said microneedle comprises metal, silicon, biocompatible polymers, titanium, silver, or suture material.

25. (Original): The system of claim 19, wherein said sensor is comprised of at least one microneedle array.

26. (Original): The system of claim 19, wherein said microneedle array comprises at least one microneedle comprising a distal tip and a bulb extending from said distal tip to provide for anchoring of said microneedle into a subject's skin.

27. (Original): The system of claim 19, wherein said microneedle array comprises at least one microneedle having a diameter in the range of about 1 to 100 microns.

28. (Original): The system of claim 27, wherein a diameter of said microneedle is in the range of about 10 to 30 microns.

29. (Original): The system of claim 19, wherein said microneedle array comprises at least one microneedle having a length in the range of about 1 to 150 microns.

30. (Original): The system of claim 29, wherein a length of said microneedle is in the range of about 100 to 150 microns.

31. (Original): The system of claim 19, further comprising an electrode needle coupled to said controller and having an end insertable into a subject's body in proximity to a stimulation site, wherein said needle is inductively coupled to said at least one conductive microneedle patch.

32. (Original): The system of claim 31, wherein said at least one microneedle patch is positioned distal to said stimulation site such that upon activation of said controller a

current traverses the stimulation site by passing from said at least one microneedle patch to said electrode needle.

33. (Original): The system of claim 32, further comprising at least one conductive coil positioned distal to said stimulation site and coupled to said controller such that upon activation of said controller a current traverses the stimulation site by passing from said at least one microneedle patch and said at least one conductive coil to said electrode needle.

34. (Original): An energy emitting system for providing a medical therapy comprising:

at least one conductive microneedle patch comprised of a microneedle array deposited on a surface of at least one electrode, wherein said microneedle array comprises an electrically conductive material such that it can transmit an electrical signal to an overlying electrode and a distal tip having a bulb extending from said distal tip to provide for anchoring of said microneedle into a subject's skin, said microneedle patch configured to deliver an electrical or magnetic stimulus to a target nerve in proximity to the at least one conductive microneedle patch;

at least one sensor configured to detect electrical conduction in the target nerve or muscle stimulation and attachable to a skin surface in proximity to a target nerve or muscle; and

a controller coupled to said at least one conductive microneedle patch and in communication with said at least one sensor.

35. (Withdrawn): An energy emitting system for providing a medical therapy comprising:

at least one conductive coil disposed within or along a housing, where the at least one coil is configured to generate a magnetic field focused on a target nerve in proximity to the at least one coil;

an electrode needle having an end insertable into a subject's body in proximity to a stimulation site, wherein said needle is inductively coupled to said at least one conductive coil; and

a controller coupled to said at least one conductive coil and said electrode needle.

36. (Withdrawn): The system of claim 35, wherein said at least one conductive coil is positioned distal to said stimulation site such that upon activation of said controller a current traverses the stimulation site by passing from said at least one conductive coil to said electrode needle.

37. (Withdrawn): The system of claim 35, further comprising at least one sensor in communication with said controller and configured to detect electrical conduction in the target nerve or muscle stimulation and attachable to a skin surface in proximity to a target nerve or muscle, wherein the magnetic field generated by said at least one conductive coil is varied based on the muscle stimulation or electrical conduction detected by said at least one sensor to ensure adequate therapeutic stimulation.

38. (Withdrawn): A method of treating a subject with urinary incontinence comprising:

positioning a first portion of a subject's body, the subject exhibiting symptoms associated with urinary incontinence, relative to an energy emitting device such that a tibial nerve within the first portion of the body is in proximity to at least one energy generator disposed within or along the energy emitting device;

passing a current through the at least one energy generator to produce a magnetic field or electrical stimulus focused on the tibial nerve;

stimulating a nerve that innervates the pelvic floor of the subject via stimulation of the tibial nerve with the magnetic field or electrical stimulus; and

reducing symptoms associated with urinary incontinence.

39. (Withdrawn): The method of claim 38, wherein the energy generator comprises a conductive coil for generating a magnetic field.

40. (Withdrawn): The method of claim 39, wherein positioning comprises placing a foot, ankle, or leg relative to at least one conductive coil disposed within or along a housing.

41. (Withdrawn): The method of claim 39, wherein positioning comprises placing a popliteal fossa relative to at least one conductive coil disposed within or along a housing.

42. (Withdrawn): The method of claim 38, wherein the energy generator comprises a microneedle patch for producing a magnetic field or electrical stimulus.

43. (Withdrawn): The method of claim 38, wherein a nerve that innervates the pelvic floor comprises the pudendal nerve or sacral plexus.

44. (Withdrawn): The method of claim 38, wherein symptoms associated with urinary incontinence comprise urinary leakage, loss of bladder control and the inability to control urinary function.

45. (Withdrawn): The method of claim 38, further comprising detecting electrical conduction through the tibial nerve or corresponding muscle stimulation via at least one sensor positioned along a second portion of the body.

46. (Withdrawn): The method of claim 45, wherein the sensor comprises a microneedle array.

47. (Withdrawn): The method of claim 45, wherein the sensor is positioned in proximity to the tibial nerve, over a muscle innervated by the tibial nerve, or over the popliteal fossa.

48. (Withdrawn): The method of claim 45, further comprising adjusting the current via a controller in communication with the energy generator according to a signal received from the sensor indicative of the nerve conduction.

49. (Withdrawn): The method of claim 48, wherein adjusting comprises adjusting amplitude, frequency, direction of a magnetic field, or firing sequence of the energy generator.

50. (Withdrawn): The method of claim 48, wherein adjusting comprises adjusting a position of the at least one coil relative to the first portion of the subject's body to re-focus the magnetic field on the tibial nerve.

51. (Withdrawn): The method of claim 48, wherein adjusting comprises adjusting a position of the microneedle patch relative to the first portion of the subject's body to re-focus the electrical or magnetic stimulus on the tibial nerve.

52. (Withdrawn): The method of claim 48, wherein adjusting comprises varying the current according to a muscular response in the patient.

53. (Withdrawn): The method of claim 39, wherein the conductive coil is operated at about 10 to 20 hertz to generate a magnetic field of about .25 to 1.5 tesla for a duration of about 30 minutes per day.

54. (Withdrawn): A method of treating a subject with urinary incontinence comprising:

positioning a first portion of a subject's body, the subject exhibiting symptoms associated with urinary incontinence, relative to a housing such that a posterior tibial nerve within the first portion of the body is in proximity to at least one conductive coil disposed within or along the housing;

passing a current through the at least one conductive coil to produce a magnetic field focused on the posterior tibial nerve;

detecting electrical conduction of the posterior tibial nerve via at least one microneedle array positioned along a second portion of the body;

receiving a signal from the microneedle array indicative of the electrical conduction;

adjusting the current via a controller in communication with the conductive coil according to the signal received from the microneedle array; and

reducing symptoms associated with urinary incontinence.

REMARKS

Claim 1-54 were presented for examination at filing. The requirement for restriction set out four groups of claims. In response, Applicants hereby elect Group II (claims 19-34), without traverse.

Accordingly, Applicants believe that, in light of the election presented herein, claims 19-34 are presently under consideration and claims 1-18 and 35-54 are withdrawn. Applicants expressly reserve their right under 35 U.S.C. § 121 to file one or more divisional applications directed to the non-elected subject matter during the pendency of this application, or an application claiming priority from this application. Applicants respectfully request examination of the elected subject matter on the merits.

In the event the appropriate fee and/or petition is not filed herewith and the U.S. Patent and Trademark Office determines that an extension and/or other relief is required, Applicant petitions for any required relief including extensions of time and authorize the Commissioner to charge the cost of such petitions and/or other fees due in connection with this filing to **Deposit Account No. 50-3973** referencing Attorney Docket No. **EMKNNZ00301**. However, the Commissioner is not authorized to charge the cost of the issue fee to the Deposit Account.

Respectfully submitted,

/Steven M. Giovannetti/

Steven M. Giovannetti
Registration No. 51,739

Customer No. 40518
Levine Bagade Han LLP
2400 Geng Road, Suite 120
Palo Alto, CA 94303
Direct: (650) 646-2570
Fax: (650) 284-2180

PTO/SB/22 (10-12)
Approved for use through 1/31/2013. OMB 0651-0031
U.S. Patent and Trademark Office; U.S. DEPARTMENT OF COMMERCE
Under the Paperwork Reduction Act of 1995, no persons are required to respond to a collection of information unless it displays a valid OMB control number.

PETITION FOR EXTENSION OF TIME UNDER 37 CFR 1.136(a)	Docket Number (Optional) EMKNNZ00301
Application Number 12/508,529	Filed July 23, 2009
For METHOD AND APPARATUS FOR MAGNETIC INDUCTION THERAPY	
Art Unit 3735	Examiner Catherine E. Burk

This is a request under the provisions of 37 CFR 1.136(a) to extend the period for filing a reply in the above-identified application.

The requested extension and fee are as follows (check time period desired and enter the appropriate fee below):

	Fee	Small Entity Fee	
☐ One month (37 CFR 1.17(a)(1))	$150	$75	$
☐ Two months (37 CFR 1.17(a)(2))	$570	$285	$
☐ Three months (37 CFR 1.17(a)(3))	$1,290	$645	$
☐ Four months (37 CFR 1.17(a)(4))	$2,010	$1,005	$
■ Five months (37 CFR 1.17(a)(5))	$2,730	$1,365	$ 1,365

■ Applicant claims small entity status. See 37 CFR 1.27.

☐ A check in the amount of the fee is enclosed.

☐ Payment by credit card. Form PTO-2038 is attached.

☐ The Director has already been authorized to charge fees in this application to a Deposit Account.

■ The Director is hereby authorized to charge any fees which may be required, or credit any overpayment, to Deposit Account Number 50-3973.

■ Payment made via EFS-Web.

WARNING: Information on this form may become public. Credit card information should not be included on this form. Provide credit card information and authorization on PTO-2038.

I am the

☐ applicant/inventor.

☐ assignee of record of the entire interest. See 37 CFR 3.71. 37 CFR 3.73(b) statement is enclosed (Form PTO/SB/96).

■ attorney or agent of record. Registration number 51,739.

☐ attorney or agent acting under 37 CFR 1.34. Registration number .....

/Steven M. Giovannetti/	January 2, 2013
Signature	Date
Steven M. Giovannetti	(650) 646-2570
Typed or printed name	Telephone Number

NOTE: This form must be signed in accordance with 37 CFR 1.33. See 37 CFR 1.4 for signature requirements and certifications. Submit multiple forms if more than one signature is required, see below*.

■ * Total of 1 forms are submitted.

This collection of information is required by 37 CFR 1.136(a). The information is required to obtain or retain a benefit by the public, which is to file (and by the USPTO to process) an application. Confidentiality is governed by 35 U.S.C. 122 and 37 CFR 1.11 and 1.14. This collection is estimated to take 6 minutes to complete, including gathering, preparing, and submitting the completed application form to the USPTO. Time will vary depending upon the individual case. Any comments on the amount of time you require to complete this form and/or suggestions for reducing this burden should be sent to the Chief Information Officer, U.S. Patent and Trademark Office, U.S. Department of Commerce, P.O. Box 1450, Alexandria, VA 22313-1450. DO NOT SEND FEES OR COMPLETED FORMS TO THIS ADDRESS. SEND TO: Mail Stop PCT, Commissioner for Patents, P.O. Box 1450, Alexandria, VA 22313-1450.

I hereby certify that this correspondence is being electronically transmitted to the USPTO on the date shown below.

Date: January 2, 2013 Signature: /Laura L. Gallagher/ (Laura L. Gallagher)

IN THE UNITED STATES PATENT AND TRADEMARK OFFICE

Application No.:	12/508,529
Confirmation No.:	8186
Filing Date:	July 23, 2009
Inventor(s):	Daniel R. BURNETT et al.
Title:	METHOD AND APPARATUS FOR MAGNETIC INDUCTION THERAPY
Examiner:	Catherine E. Burk
Group Art Unit:	3735

SUPPLEMENTAL INFORMATION DISCLOSURE STATEMENT

Mail Stop Amendment
Commissioner for Patents
P.O. Box 1450
Alexandria, VA 22313-1450

Sir:

Pursuant to 37 C.F.R. §1.97 and §1.98, Applicants submit for consideration in the above-captioned application the documents listed on the attached Form PTO/SB/08a/b. Copies of the documents were previously submitted in an Information Disclosure Statement and/or Office Action, directed to the related Application Number 11/866,329, filed October 2, 2007, and accordingly, copies are not included herewith. The Examiner is requested to make these documents of record in the application.

This Information Disclosure Statement is submitted within three months of the application filing date or before mailing of a first Office Action on the merits; accordingly, no fee or separate requirements are required.

Applicants would appreciate the Examiner initialing and returning the Form PTO/SB/08a/b, indicating that the information has been considered and made of record herein.

The information contained in this Information Disclosure Statement under 37 C.F.R. §1.97 and §1.98 is not to be construed as a representation that: (i) a complete search has been made; (ii) additional information material to the examination of this application does not exist; (iii) the information, protocols, results and the like reported by third parties are accurate or enabling; or (iv) the above information constitutes prior art to the subject invention.

In the event the appropriate fee and/or petition is not filed herewith and the U.S. Patent and Trademark Office determines that an extension and/or other relief is required, Applicants petition for any required relief including extensions of time and authorize the Commissioner to charge the cost of such petitions and/or other fees due in connection with this filing to **Deposit Account No. 50-3973** referencing Attorney Docket No. **EMKNNZ00301**. However, the Commissioner is not authorized to charge the cost of the issue fee to the Deposit Account.

Respectfully submitted,

/Steven M. Giovannetti/

Steven M. Giovannetti
Registration No. 51,739

Customer No. 40518
Levine Bagade Han LLP
2400 Geng Road, Suite 120
Palo Alto, CA 94303
Direct: (650) 646-2570
Fax: (650) 284-2180

Substitute for form 1449/PTO

INFORMATION DISCLOSURE STATEMENT BY APPLICANT

(Use as many sheets as necessary)

Sheet	1	of	2

Complete if Known	
Application Number	12/508,529
Filing Date	July 23, 2009
First Named Inventor	Daniel R. BURNETT
Art Unit	3735
Examiner Name	Catherine E. Burk
Attorney Docket Number	EMKNNZ00301

U.S. PATENT DOCUMENTS

Examiner Initials*	Cite No.[1]	Document Number Number-Kind Code[2] *(if known)*	Publication Date MM-DD-YYYY	Name of Patentee or Applicant of Cited Document	Pages, Columns, Lines, Where Relevant Passages or Relevant Figures Appear
	1.	3,841,305	10-15-1974	Hallgren	
	2.	4,266,533	05-12-1981	Ryaby et al.	
	3.	4,926,878	05-22-1990	Snedeker	
	4.	5,309,909	05-10-1994	Gadsby et al	
	5.	5,562,707	10-08-1996	Prochazka et al.	
	6.	5,978,712	11-02-1999	Suda et al.	
	7.	6,366,795	04-02-2002	Bremer et al.	
	8.	7,032,302	04-25-2006	Schmidt et al.	
	9.	7,187,976	03-06-2007	Duncan et al.	
	10.	2003/0144625	07-31-2003	Sherman et al.	
	11.	2004/0010276	01-15-2004	Jacobs et al.	
	12.	2004/0122787	06-24-2004	Avanash et al.	
	13.	2004/0173220	09-09-2004	Harry et al.	
	14.	2005/0021104	01-27-2005	Dilorenzo	
	15.	2005/0143783	06-30-2005	Boveja et al.	
	16.	2005/0143789	06-30-2005	Whitehurst et al.	
	17.	2005/0203602	09-15-2005	Wallace et al.	
	18.	2005/0283202	12-22-2005	Gellman	
	19.	2006/0135844	06-22-2006	Alekseyenko	
	20.	2006/0276702	12-07-2006	Mcginnis	
	21.	2007/0250162	10-25-2007	Royalty	
	22.	2007/0265489	11-15-2007	Fowler et al.	
	23.	2008/0004484	01-03-2008	Wieraszko et al.	
	24.	2010/0022864	01-28-2010	Cordero et al.	
	25.	2011/0295100	12-01-2011	Hedge et al.	

FOREIGN PATENT DOCUMENTS

Examiner Initials*	Cite No.[1]	Foreign Patent Document Country Code[3]-Number[4]-Kind Code[5] *(if known)*	Publication Date MM-DD-YYYY	Name of Patentee or Applicant of Cited Document	Pages, Columns, Lines, Where Relevant Passages or Relevant Figures Appear	T[6]
	26.	JP 2000-254239	09-19-2000	APOLLO MEC:KK		
	27.	WO 2011/053607	05-05-2011	EMKINETICS, INC.		
	28.	WO 2011/053661	05-05-2011	EMKINETICS, INC.		
	29.	WO 2011/150332	12-01-2011	EMKINETICS, INC.		
	30.	WO 2012/040243	03-29-2012	EMKINETICS, INC.		

Examiner Signature		Date Considered	

Substitute for form 1449/PTO

INFORMATION DISCLOSURE STATEMENT BY APPLICANT

(Use as many sheets as necessary)

Sheet	2	of	2

Complete if Known	
Application Number	12/508,529
Filing Date	July 23, 2009
First Named Inventor	Daniel R. BURNETT
Art Unit	3735
Examiner Name	Catherine E. Burk
Attorney Docket Number	EMKNNZ00301

*EXAMINER: Initial if information considered, whether or not citation is in conformance with MPEP 609. Draw line through citation if not in conformance and not considered. Include copy of this form with next communication to applicant. [1] Applicant's unique citation designation number (optional). [2] See Kinds Codes of USPTO Patent Documents at www.uspto.gov or MPEP 901.04. [3] Enter Office that issued the document, by the two-letter code (WIPO Standard ST.3). [4] For Japanese patent documents, the indication of the year of the reign of the Emperor must precede the serial number of the patent document. [5] Kind of document by the appropriate symbols as indicated on the document under WIPO Standard ST. 16 if possible. [6] Applicant is to place a check mark here if English language Translation is attached.

Examiner Signature		Date Considered	

Electronic Patent Application Fee Transmittal

Application Number:	12508529
Filing Date:	23-Jul-2009
Title of Invention:	METHOD AND APPARATUS FOR MAGNETIC INDUCTION THERAPY
First Named Inventor/Applicant Name:	Daniel Rogers Burnett
Filer:	Laura Lan Shires
Attorney Docket Number:	EMKNNZ00301

Filed as Small Entity

Utility under 35 USC 111(a) Filing Fees

Description	Fee Code	Quantity	Amount	Sub-Total in USD($)
Basic Filing:				
Pages:				
Claims:				
Miscellaneous-Filing:				
Petition:				
Patent-Appeals-and-Interference:				
Post-Allowance-and-Post-Issuance:				
Extension-of-Time:				
Extension - 5 months with $0 paid	2255	1	1365	1365

Description	Fee Code	Quantity	Amount	Sub-Total in USD($)
Miscellaneous:				
			Total in USD ($)	**1365**

Electronic Acknowledgement Receipt

EFS ID:	14596115
Application Number:	12508529
International Application Number:	
Confirmation Number:	8186
Title of Invention:	METHOD AND APPARATUS FOR MAGNETIC INDUCTION THERAPY
First Named Inventor/Applicant Name:	Daniel Rogers Burnett
Customer Number:	40518
Filer:	Laura Lan Shires
Filer Authorized By:	
Attorney Docket Number:	EMKNNZ00301
Receipt Date:	02-JAN-2013
Filing Date:	23-JUL-2009
Time Stamp:	14:22:58
Application Type:	Utility under 35 USC 111(a)

Payment information:

Submitted with Payment	yes
Payment Type	Credit Card
Payment was successfully received in RAM	$1365
RAM confirmation Number	667
Deposit Account	
Authorized User	

File Listing:

Document Number	Document Description	File Name	File Size(Bytes)/ Message Digest	Multi Part /.zip	Pages (if appl.)

1		01_EMKNNZ00301_20130102_response_to_restriction_requirement.pdf	1695663 5439574ecbb5be7beefbe577ac4a8a9fe8d4a715	yes	10
	Multipart Description/PDF files in .zip description				
	Document Description		**Start**	**End**	
	Response to Election / Restriction Filed		1	1	
	Claims		2	9	
	Applicant Arguments/Remarks Made in an Amendment		10	10	
Warnings:					
Information:					
2	Extension of Time	02_EMKNNZ00301_20130102_extension_of_time.pdf	241597 79371c8c132450caa04d15b6a582063c0ce181a9	no	1
Warnings:					
Information:					
3	Transmittal Letter	03_EMKNNZ00301_20130102_ids_cover_letter.pdf	294029 0de083eb91b4f2c03b175b86b9bde0d6ebcc7ffe	no	2
Warnings:					
Information:					
4	Information Disclosure Statement (IDS) Form (SB08)	04_EMKNNZ00301_20130102_ids_sb08.pdf	222636 19dd90273e25334db525a3086aa3f58e39ebe96d	no	2
Warnings:					
Information:					
This is not an USPTO supplied IDS fillable form					
5	Fee Worksheet (SB06)	fee-info.pdf	30487 39cf1e7a1405fa61d44808eef59ddb4d3a770376	no	2
Warnings:					
Information:					
		Total Files Size (in bytes):	2484412		

This Acknowledgement Receipt evidences receipt on the noted date by the USPTO of the indicated documents, characterized by the applicant, and including page counts, where applicable. It serves as evidence of receipt similar to a Post Card, as described in MPEP 503.

New Applications Under 35 U.S.C. 111
If a new application is being filed and the application includes the necessary components for a filing date (see 37 CFR 1.53(b)-(d) and MPEP 506), a Filing Receipt (37 CFR 1.54) will be issued in due course and the date shown on this Acknowledgement Receipt will establish the filing date of the application.

National Stage of an International Application under 35 U.S.C. 371
If a timely submission to enter the national stage of an international application is compliant with the conditions of 35 U.S.C. 371 and other applicable requirements a Form PCT/DO/EO/903 indicating acceptance of the application as a national stage submission under 35 U.S.C. 371 will be issued in addition to the Filing Receipt, in due course.

New International Application Filed with the USPTO as a Receiving Office
If a new international application is being filed and the international application includes the necessary components for an international filing date (see PCT Article 11 and MPEP 1810), a Notification of the International Application Number and of the International Filing Date (Form PCT/RO/105) will be issued in due course, subject to prescriptions concerning national security, and the date shown on this Acknowledgement Receipt will establish the international filing date of the application.

PTO/SB/06 (07-06)
Approved for use through 1/31/2007. OMB 0651-0032
U.S. Patent and Trademark Office; U.S. DEPARTMENT OF COMMERCE
Under the Paperwork Reduction Act of 1995, no persons are required to respond to a collection of information unless it displays a valid OMB control number.

PATENT APPLICATION FEE DETERMINATION RECORD

Substitute for Form PTO-875

Application or Docket Number	Filing Date	☐ To be Mailed
12/508,529	07/23/2009	

APPLICATION AS FILED – PART I

FOR	(Column 1) NUMBER FILED	(Column 2) NUMBER EXTRA	SMALL ENTITY ☒ RATE ($)	FEE ($)	OR	OTHER THAN SMALL ENTITY RATE ($)	FEE ($)
☐ BASIC FEE (37 CFR 1.16(a), (b), or (c))	N/A	N/A	N/A			N/A	
☐ SEARCH FEE (37 CFR 1.16(k), (i), or (m))	N/A	N/A	N/A			N/A	
☐ EXAMINATION FEE (37 CFR 1.16(o), (p), or (q))	N/A	N/A	N/A			N/A	
TOTAL CLAIMS (37 CFR 1.16(i))	minus 20 =	*	X $ =		OR	X $ =	
INDEPENDENT CLAIMS (37 CFR 1.16(h))	minus 3 =	*	X $ =			X $ =	
☐ APPLICATION SIZE FEE (37 CFR 1.16(s))	If the specification and drawings exceed 100 sheets of paper, the application size fee due is $250 ($125 for small entity) for each additional 50 sheets or fraction thereof. See 35 U.S.C. 41(a)(1)(G) and 37 CFR 1.16(s).						
☐ MULTIPLE DEPENDENT CLAIM PRESENT (37 CFR 1.16(j))							
* If the difference in column 1 is less than zero, enter "0" in column 2.			TOTAL			TOTAL	

APPLICATION AS AMENDED – PART II

AMENDMENT 01/02/2013	(Column 1) CLAIMS REMAINING AFTER AMENDMENT		(Column 2) HIGHEST NUMBER PREVIOUSLY PAID FOR	(Column 3) PRESENT EXTRA	SMALL ENTITY RATE ($)	ADDITIONAL FEE ($)	OR	OTHER THAN SMALL ENTITY RATE ($)	ADDITIONAL FEE ($)
Total (37 CFR 1.16(i))	* 54	Minus	** 54	= 0	X $31 =	0	OR	X $ =	
Independent (37 CFR 1.16(h))	* 7	Minus	***7	= 0	X $125 =	0	OR	X $ =	
☐ Application Size Fee (37 CFR 1.16(s))									
☐ FIRST PRESENTATION OF MULTIPLE DEPENDENT CLAIM (37 CFR 1.16(j))							OR		
					TOTAL ADD'L FEE	0	OR	TOTAL ADD'L FEE	

AMENDMENT	(Column 1) CLAIMS REMAINING AFTER AMENDMENT		(Column 2) HIGHEST NUMBER PREVIOUSLY PAID FOR	(Column 3) PRESENT EXTRA	RATE ($)	ADDITIONAL FEE ($)	OR	RATE ($)	ADDITIONAL FEE ($)
Total (37 CFR 1.16(i))	*	Minus	**	=	X $ =		OR	X $ =	
Independent (37 CFR 1.16(h))	*	Minus	***	=	X $ =		OR	X $ =	
☐ Application Size Fee (37 CFR 1.16(s))									
☐ FIRST PRESENTATION OF MULTIPLE DEPENDENT CLAIM (37 CFR 1.16(j))							OR		
					TOTAL ADD'L FEE		OR	TOTAL ADD'L FEE	

* If the entry in column 1 is less than the entry in column 2, write "0" in column 3.

** If the "Highest Number Previously Paid For" IN THIS SPACE is less than 20, enter "20".

*** If the "Highest Number Previously Paid For" IN THIS SPACE is less than 3, enter "3".

The "Highest Number Previously Paid For" (Total or Independent) is the highest number found in the appropriate box in column 1.

Legal Instrument Examiner:
/KATISCHA WANZER/

This collection of information is required by 37 CFR 1.16. The information is required to obtain or retain a benefit by the public which is to file (and by the USPTO to process) an application. Confidentiality is governed by 35 U.S.C. 122 and 37 CFR 1.14. This collection is estimated to take 12 minutes to complete, including gathering, preparing, and submitting the completed application form to the USPTO. Time will vary depending upon the individual case. Any comments on the amount of time you require to complete this form and/or suggestions for reducing this burden, should be sent to the Chief Information Officer, U.S. Patent and Trademark Office, U.S. Department of Commerce, P.O. Box 1450, Alexandria, VA 22313-1450. DO NOT SEND FEES OR COMPLETED FORMS TO THIS ADDRESS. **SEND TO: Commissioner for Patents, P.O. Box 1450, Alexandria, VA 22313-1450.**

If you need assistance in completing the form, call 1-800-PTO-9199 and select option 2.

UNITED STATES PATENT AND TRADEMARK OFFICE

UNITED STATES DEPARTMENT OF COMMERCE
United States Patent and Trademark Office
Address: COMMISSIONER FOR PATENTS
P.O. Box 1450
Alexandria, Virginia 22313-1450
www.uspto.gov

APPLICATION NO.	FILING DATE	FIRST NAMED INVENTOR	ATTORNEY DOCKET NO.	CONFIRMATION NO.
12/508,529	07/23/2009	Daniel Rogers Burnett	EMKNNZ00301	8186

40518 7590 07/02/2012
LEVINE BAGADE HAN LLP
2400 GENG ROAD, SUITE 120
PALO ALTO, CA 94303

EXAMINER
BURK, CATHERINE E

ART UNIT	PAPER NUMBER
3735	

MAIL DATE	DELIVERY MODE
07/02/2012	PAPER

Please find below and/or attached an Office communication concerning this application or proceeding.

The time period for reply, if any, is set in the attached communication.

Office Action Summary	Application No.	Applicant(s)	
	12/508,529	BURNETT ET AL.	
	Examiner	Art Unit	
	CATHERINE E. BURK	3735	

-- The MAILING DATE of this communication appears on the cover sheet with the correspondence address --

Period for Reply

A SHORTENED STATUTORY PERIOD FOR REPLY IS SET TO EXPIRE 1 MONTH(S) OR THIRTY (30) DAYS, WHICHEVER IS LONGER, FROM THE MAILING DATE OF THIS COMMUNICATION.

- Extensions of time may be available under the provisions of 37 CFR 1.136(a). In no event, however, may a reply be timely filed after SIX (6) MONTHS from the mailing date of this communication.
- If NO period for reply is specified above, the maximum statutory period will apply and will expire SIX (6) MONTHS from the mailing date of this communication.
- Failure to reply within the set or extended period for reply will, by statute, cause the application to become ABANDONED (35 U.S.C. § 133). Any reply received by the Office later than three months after the mailing date of this communication, even if timely filed, may reduce any earned patent term adjustment. See 37 CFR 1.704(b).

Status

1)☒ Responsive to communication(s) filed on *23 July 2009*.

2a)☐ This action is **FINAL**. 2b)☐ This action is non-final.

3)☐ An election was made by the applicant in response to a restriction requirement set forth during the interview on _____; the restriction requirement and election have been incorporated into this action.

4)☐ Since this application is in condition for allowance except for formal matters, prosecution as to the merits is closed in accordance with the practice under *Ex parte Quayle*, 1935 C.D. 11, 453 O.G. 213.

Disposition of Claims

5)☒ Claim(s) *1-54* is/are pending in the application.

5a) Of the above claim(s) _____ is/are withdrawn from consideration.

6)☐ Claim(s) _____ is/are allowed.

7)☐ Claim(s) _____ is/are rejected.

8)☐ Claim(s) _____ is/are objected to.

9)☒ Claim(s) *1-54* are subject to restriction and/or election requirement.

Application Papers

10)☐ The specification is objected to by the Examiner.

11)☐ The drawing(s) filed on _____ is/are: a)☐ accepted or b)☐ objected to by the Examiner.

Applicant may not request that any objection to the drawing(s) be held in abeyance. See 37 CFR 1.85(a).

Replacement drawing sheet(s) including the correction is required if the drawing(s) is objected to. See 37 CFR 1.121(d).

12)☐ The oath or declaration is objected to by the Examiner. Note the attached Office Action or form PTO-152.

Priority under 35 U.S.C. § 119

13)☐ Acknowledgment is made of a claim for foreign priority under 35 U.S.C. § 119(a)-(d) or (f).

a)☐ All b)☐ Some * c)☐ None of:

1.☐ Certified copies of the priority documents have been received.

2.☐ Certified copies of the priority documents have been received in Application No. _____.

3.☐ Copies of the certified copies of the priority documents have been received in this National Stage application from the International Bureau (PCT Rule 17.2(a)).

* See the attached detailed Office action for a list of the certified copies not received.

Attachment(s)

1) ☐ Notice of References Cited (PTO-892)
2) ☐ Notice of Draftsperson's Patent Drawing Review (PTO-948)
3) ☐ Information Disclosure Statement(s) (PTO/SB/08) Paper No(s)/Mail Date _____.
4) ☐ Interview Summary (PTO-413) Paper No(s)/Mail Date. _____ .
5) ☐ Notice of Informal Patent Application
6) ☐ Other: _____.

DETAILED ACTION

Election/Restrictions

1. Restriction to one of the following inventions is required under 35 U.S.C. 121:

   I. Claims 1-18, drawn to an energy emitting system comprising a coil and a sensor, classified in class 600, subclass 13.

   II. Claims 19-34, drawn to an energy emitting system comprising a microneedle patch, classified in class 607, subclass 41.

   III. Claims 35-37, drawn to an energy emitting system comprising a coil and an electrode needle, classified in class 600, subclass 13.

   IV. Claims 38-54, drawn to a method of treating a subject with urinary incontinence, classified in class 600, subclass 9.

The inventions are distinct, each from the other because of the following reasons:

2. Inventions I and II are directed to related products. The related inventions are distinct if: (1) the inventions as claimed are either not capable of use together or can have a materially different design, mode of operation, function, or effect; (2) the inventions do not overlap in scope, i.e., are mutually exclusive; and (3) the inventions as claimed are not obvious variants. See MPEP § 806.05(j). In the instant case, the inventions as claimed have a materially different design and mode of operation. Group I requires a conductive coil to provide a magnetic field to stimulate a target nerve. Group II requires a microneedle array to generate a magnetic or electrical stimulus with no coil requirement. Group I discloses a microneedle array however this is only for sensing

and need not be able to stimulate. Furthermore, the inventions as claimed do not encompass overlapping subject matter and there is nothing of record to show them to be obvious variants.

3. Inventions I and III are directed to related products. The related inventions are distinct if: (1) the inventions as claimed are either not capable of use together or can have a materially different design, mode of operation, function, or effect; (2) the inventions do not overlap in scope, i.e., are mutually exclusive; and (3) the inventions as claimed are not obvious variants. See MPEP § 806.05(j). In the instant case, the inventions as claimed have materially different designs and modes of operation. Group I uses a coil to provide a magnetic field which stimulates a nerve and senses the stimulation with a sensor. Group III uses a coil in combination with an electrode needle which is inserted into a subject's body to stimulate the nerve and does not include a sensor. Group I does not recite an electrode needle. Furthermore, the inventions as claimed do not encompass overlapping subject matter and there is nothing of record to show them to be obvious variants.

4. Inventions I and IV are related as process and apparatus for its practice. The inventions are distinct if it can be shown that either: (1) the process as claimed can be practiced by another and materially different apparatus or by hand, or (2) the apparatus as claimed can be used to practice another and materially different process. (MPEP § 806.05(e)). In this case the apparatus as claimed can be used to carry out materially different processes such as stimulating nerves other than the tibial nerve or for focusing

magnetic fields on other areas of the body for other purposes such as brain stimulation or pain therapy.

5. Inventions II and III are directed to related products. The related inventions are distinct if: (1) the inventions as claimed are either not capable of use together or can have a materially different design, mode of operation, function, or effect; (2) the inventions do not overlap in scope, i.e., are mutually exclusive; and (3) the inventions as claimed are not obvious variants. See MPEP § 806.05(j). In the instant case, the inventions as claimed have materially different designs and modes of operation. Group II uses a microneedle patch to magnetically or electrically stimulate a target nerve. Group III uses a conductive coil and an electrode needle to stimulate a target nerve. Since group II uses a microneedle patch and group III uses a conductive coil, they have different designs and modes of operation. Furthermore, the inventions as claimed do not encompass overlapping subject matter and there is nothing of record to show them to be obvious variants.

6. Inventions II and IV are related as process and apparatus for its practice. The inventions are distinct if it can be shown that either: (1) the process as claimed can be practiced by another and materially different apparatus or by hand, or (2) the apparatus as claimed can be used to practice another and materially different process. (MPEP § 806.05(e)). In this case the apparatus as claimed can be used to carry out materially different processes such as stimulating nerves other than the tibial nerve or for focusing electric fields on other areas of the body for other purposes such as brain stimulation or pain therapy.

7. Inventions III and IV are related as process and apparatus for its practice. The inventions are distinct if it can be shown that either: (1) the process as claimed can be practiced by another and materially different apparatus or by hand, or (2) the apparatus as claimed can be used to practice another and materially different process. (MPEP § 806.05(e)). In this case the apparatus as claimed can be used to carry out materially different processes such as stimulating nerves other than the tibial nerve or for focusing magnetic fields on other areas of the body for other purposes such as brain stimulation or pain therapy.

8. Restriction for examination purposes as indicated is proper because all these inventions listed in this action are independent or distinct for the reasons given above and there would be a serious search and/or examination burden if restriction were not required because at least the following reason(s) apply:

The claims have acquired a separate status in the art due in light of their divergent subject matter and classification. Each group would also require a different field of search and non-overlapping search strings and strategies.

Applicant is advised that the reply to this requirement to be complete <u>must</u> include (i) an election of a invention to be examined even though the requirement may be traversed (37 CFR 1.143) **and (ii) identification of the claims encompassing the elected invention**.

The election of an invention may be made with or without traverse. To reserve a right to petition, the election must be made with traverse. If the reply does not distinctly and specifically point out supposed errors in the restriction requirement, the election

shall be treated as an election without traverse. Traversal must be presented at the time of election in order to be considered timely. Failure to timely traverse the requirement will result in the loss of right to petition under 37 CFR 1.144. If claims are added after the election, applicant must indicate which of these claims are readable upon the elected invention.

Should applicant traverse on the ground that the inventions are not patentably distinct, applicant should submit evidence or identify such evidence now of record showing the inventions to be obvious variants or clearly admit on the record that this is the case. In either instance, if the examiner finds one of the inventions unpatentable over the prior art, the evidence or admission may be used in a rejection under 35 U.S.C. 103(a) of the other invention.

9. A telephone call was made to Steven Giovannetti on June 20th, 2012 to request an oral election to the above restriction requirement, but did not result in an election being made.

10. Applicant is reminded that upon the cancellation of claims to a non-elected invention, the inventorship must be amended in compliance with 37 CFR 1.48(b) if one or more of the currently named inventors is no longer an inventor of at least one claim remaining in the application. Any amendment of inventorship must be accompanied by a request under 37 CFR 1.48(b) and by the fee required under 37 CFR 1.17(i).

Any inquiry concerning this communication or earlier communications from the examiner should be directed to CATHERINE E. BURK whose telephone number is

(571)270-7130. The examiner can normally be reached on Monday-Friday 9:00 am - 5:30 pm Eastern Time.

If attempts to reach the examiner by telephone are unsuccessful, the examiner's supervisor, Charles Marmor can be reached on (571) 272-4730. The fax phone number for the organization where this application or proceeding is assigned is 571-273-8300.

Information regarding the status of an application may be obtained from the Patent Application Information Retrieval (PAIR) system. Status information for published applications may be obtained from either Private PAIR or Public PAIR. Status information for unpublished applications is available through Private PAIR only. For more information about the PAIR system, see http://pair-direct.uspto.gov. Should you have questions on access to the Private PAIR system, contact the Electronic Business Center (EBC) at 866-217-9197 (toll-free). If you would like assistance from a USPTO Customer Service Representative or access to the automated information system, call 800-786-9199 (IN USA OR CANADA) or 571-272-1000.

/Charles A. Marmor, II/
Supervisory Patent Examiner
Art Unit 3735

/C. E. B./
Examiner, Art Unit 3735

Index of Claims	Application/Control No.	Applicant(s)/Patent Under Reexamination
	12508529	BURNETT ET AL.
	Examiner	**Art Unit**
	CATHERINE E BURK	3735

✓	Rejected	-	Cancelled	N	Non-Elected	A	Appeal
=	Allowed	÷	Restricted	I	Interference	O	Objected

☐ Claims renumbered in the same order as presented by applicant ☐ CPA ☐ T.D. ☐ R.1.47

CLAIM		DATE								
Final	Original	06/27/2012								
	1	÷								
	2	÷								
	3	÷								
	4	÷								
	5	÷								
	6	÷								
	7	÷								
	8	÷								
	9	÷								
	10	÷								
	11	÷								
	12	÷								
	13	÷								
	14	÷								
	15	÷								
	16	÷								
	17	÷								
	18	÷								
	19	÷								
	20	÷								
	21	÷								
	22	÷								
	23	÷								
	24	÷								
	25	÷								
	26	÷								
	27	÷								
	28	÷								
	29	÷								
	30	÷								
	31	÷								
	32	÷								
	33	÷								
	34	÷								
	35	÷								
	36	÷								

Index of Claims	Application/Control No.	Applicant(s)/Patent Under Reexamination
	12508529	BURNETT ET AL.
	Examiner	**Art Unit**
	CATHERINE E BURK	3735

✓	Rejected	-	Cancelled	N	Non-Elected	A	Appeal
=	Allowed	÷	Restricted	I	Interference	O	Objected

☐ Claims renumbered in the same order as presented by applicant ☐ CPA ☐ T.D. ☐ R.1.47

CLAIM		DATE								
Final	Original	06/27/2012								
	37	÷								
	38	÷								
	39	÷								
	40	÷								
	41	÷								
	42	÷								
	43	÷								
	44	÷								
	45	÷								
	46	÷								
	47	÷								
	48	÷								
	49	÷								
	50	÷								
	51	÷								
	52	÷								
	53	÷								
	54	÷								

Substitute for form 1449/PTO

INFORMATION DISCLOSURE STATEMENT BY APPLICANT

(Use as many sheets as necessary)

Sheet	1	of	1

Complete If Known	
Application Number	12/508,529
Filing Date	July 23, 2009
First Named Inventor	Daniel Rogers BURNETT
Art Unit	3766
Examiner Name	Not Yet Assigned
Attorney Docket Number	EMKNNZ00301

U.S. PATENT DOCUMENTS

Examiner Initials*	Cite No.[1]	Document Number Number-Kind Code[2] *(if known)*	Publication Date MM-DD-YYYY	Name of Patentee or Applicant of Cited Document	Pages, Columns, Lines, Where Relevant Passages or Relevant Figures Appear

FOREIGN PATENT DOCUMENTS

Examiner Initials*	Cite No.[1]	Foreign Patent Document Country Code[3]-Number[4]-Kind Code[5] *(if known)*	Publication Date MM-DD-YYYY	Name of Patentee or Applicant of Cited Document	Pages, Columns, Lines, Where Relevant Passages or Relevant Figures Appear	T[6]

*EXAMINER: Initial if information considered, whether or not citation is in conformance with MPEP 609. Draw line through citation if not in conformance and not considered. Include copy of this form with next communication to applicant. [1] Applicant's unique citation designation number (optional). [2] See Kinds Codes of USPTO Patent Documents at www.uspto.gov or MPEP 901.04. [3] Enter Office that issued the document, by the two-letter code (WIPO Standard ST.3). [4] For Japanese patent documents, the indication of the year of the reign of the Emperor must precede the serial number of the patent document. [5] Kind of document by the appropriate symbols as indicated on the document under WIPO Standard ST. 16 if possible. [6] Applicant is to place a check mark here if English language Translation is attached.

NON PATENT LITERATURE DOCUMENTS

Examiner Initials*	Cite No.[1]	Include name of the author (in CAPITAL LETTERS), title of the article (when appropriate), title of the item (book, magazine, journal, serial, symposium, catalog, etc.), date, page(s), volume-issue number(s), publisher, city and/or country where published.	T[2]
	1.	U.S. Patent Application No. 12/509,304 filed July 24, 2009 in the name of Burnett et al., non-final Office Action mailed February 14, 2011.	

*EXAMINER: Initial if reference considered, whether or not citation is in conformance with MPEP 609. Draw line through citation if not in conformance and not considered. Include copy of this form with next communication to applicant.

[1]Applicant's unique citation designation number (optional). [2]Applicant is to place a check mark here if English language Translation is attached.

Examiner Signature		Date Considered	

Electronic Acknowledgement Receipt

EFS ID:	9615505
Application Number:	12508529
International Application Number:	
Confirmation Number:	8186
Title of Invention:	METHOD AND APPARATUS FOR MAGNETIC INDUCTION THERAPY
First Named Inventor/Applicant Name:	Daniel Rogers Burnett
Customer Number:	40518
Filer:	Laura Lan Shires
Filer Authorized By:	
Attorney Docket Number:	EMKNNZ00301
Receipt Date:	08-MAR-2011
Filing Date:	23-JUL-2009
Time Stamp:	19:12:19
Application Type:	Utility under 35 USC 111(a)

Payment information:

Submitted with Payment	no

File Listing:

Document Number	Document Description	File Name	File Size(Bytes)/ Message Digest	Multi Part /.zip	Pages (if appl.)
1	Transmittal Letter	EMKNNZ00301_20110308_ids_cover_letter.pdf	171646 ec336c78add6e7b74890b96e2786012949c92aac	no	2

Warnings:

Information:

2	Information Disclosure Statement (IDS) Filed (SB/08)	EMKNNZ00301_20110308_ids_sb08.pdf	107377 d329cfea1f081f9636dca39ad417ad78baa84fd2	no	1

Warnings:

Information:

This is not an USPTO supplied IDS fillable form

Total Files Size (in bytes):	279023

This Acknowledgement Receipt evidences receipt on the noted date by the USPTO of the indicated documents, characterized by the applicant, and including page counts, where applicable. It serves as evidence of receipt similar to a Post Card, as described in MPEP 503.

New Applications Under 35 U.S.C. 111
If a new application is being filed and the application includes the necessary components for a filing date (see 37 CFR 1.53(b)-(d) and MPEP 506), a Filing Receipt (37 CFR 1.54) will be issued in due course and the date shown on this Acknowledgement Receipt will establish the filing date of the application.

National Stage of an International Application under 35 U.S.C. 371
If a timely submission to enter the national stage of an international application is compliant with the conditions of 35 U.S.C. 371 and other applicable requirements a Form PCT/DO/EO/903 indicating acceptance of the application as a national stage submission under 35 U.S.C. 371 will be issued in addition to the Filing Receipt, in due course.

New International Application Filed with the USPTO as a Receiving Office
If a new international application is being filed and the international application includes the necessary components for an international filing date (see PCT Article 11 and MPEP 1810), a Notification of the International Application Number and of the International Filing Date (Form PCT/RO/105) will be issued in due course, subject to prescriptions concerning national security, and the date shown on this Acknowledgement Receipt will establish the international filing date of the application.

I hereby certify that this correspondence is being electronically transmitted to the USPTO on the date shown below.

Date: March 8, 2011 Signature: /Laura L. Gallagher/ (Laura L. Gallagher)

IN THE UNITED STATES PATENT AND TRADEMARK OFFICE

Application No.:	12/508,529
Confirmation No.:	8186
Filing Date:	July 23, 2009
Inventor(s):	Daniel Rogers BURNETT et al.
Title:	METHOD AND APPARATUS FOR MAGNETIC INDUCTION THERAPY
Examiner:	Not Yet Assigned
Group Art Unit:	3766

SUPPLEMENTAL INFORMATION DISCLOSURE STATEMENT

Commissioner for Patents
P.O. Box 1450
Alexandria, VA 22313-1450

Sir:

Pursuant to 37 C.F.R. §1.97 and §1.98, Applicants submit for consideration in the above-captioned application the document listed on the attached Form PTO/SB/08a/b. A copy of the document was previously submitted in an Information Disclosure Statement and/or Office Action, directed to the related Application Number 11/866,329 filed October 2, 2007, and accordingly, a copy is not included herewith. The Examiner is requested to make this document of record in the application.

This Information Disclosure Statement is submitted within three months of the application filing date or before mailing of a first Office Action on the merits; accordingly, no fee or separate requirements are required.

Applicants would appreciate the Examiner initialing and returning the Form PTO/SB/08a/b, indicating that the information has been considered and made of record herein.

The information contained in this Information Disclosure Statement under 37 C.F.R. §1.97 and §1.98 is not to be construed as a representation that: (i) a complete search has been made; (ii) additional information material to the examination of this application does not exist; (iii) the information, protocols, results and the like reported by third parties are accurate or enabling; or (iv) the above information constitutes prior art to the subject invention.

In the event the appropriate fee and/or petition is not filed herewith and the U.S. Patent and Trademark Office determines that an extension and/or other relief is required, Applicants petition for any required relief including extensions of time and authorize the Commissioner to charge the cost of such petitions and/or other fees due in connection with this filing to **Deposit Account No. 50-3973** referencing Attorney Docket No. **EMKNNZ00301**. However, the Commissioner is not authorized to charge the cost of the issue fee to the Deposit Account.

Respectfully submitted,

/Steven M. Giovannetti/

Steven M. Giovannetti
Registration No. 51,739

Customer No. 40518
Levine Bagade Han LLP
2400 Geng Road, Suite 120
Palo Alto, CA 94303
Direct: (650) 646-2570
Fax: (650) 284-2180

Substitute for form 1449/PTO

INFORMATION DISCLOSURE STATEMENT BY APPLICANT

(Use as many sheets as necessary)

Sheet	1	of	11

Complete If Known	
Application Number	12/508,529
Filing Date	July 23, 2009
First Named Inventor	Daniel Rogers BURNETT
Art Unit	3766
Examiner Name	Not Yet Assigned
Attorney Docket Number	EMKNNZ00301

U.S. PATENT DOCUMENTS

Examiner Initials*	Cite No.[1]	Document Number Number-Kind Code[2] *(if known)*	Publication Date MM-DD-YYYY	Name of Patentee or Applicant of Cited Document	Pages, Columns, Lines, Where Relevant Passages or Relevant Figures Appear
	1.	2,893,392	07-07-1959	Wagner et al.	
	2.	3,034,507	05-15-1962	McConnell et al.	
	3.	3,817,254	06-18-1974	Maurer	
	4.	4,428,366	01-31-1984	Findl et al.	
	5.	4,456,012	06-26-1984	Lattin	
	6.	4,548,208	10-22-1985	Niemi	
	7.	4,574,809	03-11-1986	Talish et al.	
	8.	4,784,737	11-15-1988	Ray et al.	
	9.	4,804,054	02-14-1989	Howson et al.	
	10.	4,915,110	04-10-1990	Kitov	
	11.	4,940,453	07-10-1990	Cadwell	
	12.	5,000,178	03-19-1991	Griffith	
	13.	5,014,699	05-14-1991	Pollack et al.	
	14.	5,092,835	03-03-1992	Schurig et al.	
	15.	5,181,902	01-26-1993	Erickson et al.	
	16.	5,314,401	05-24-1994	Tepper	
	17.	5,314,453	05-24-1994	Jeutter	
	18.	5,401,233	03-28-1995	Erickson et al.	
	19.	5,449,378	09-12-1995	Schouenborg	
	20.	5,518,495	05-21-1996	Kolt	
	21.	5,690,693	11-25-1997	Wang et al.	
	22.	5,715,837	02-10-1998	Chen	
	23.	5,725,471	03-10-1998	Davey et al.	
	24.	5,749,909	05-12-1998	Schroeppel et al.	
	25.	5,766,124	06-16-1998	Polson	
	26.	5,792,187	08-11-1998	Adams	
	27.	5,792,209	08-11-1998	Varner	
	28.	5,833,600	11-10-1998	Young	
	29.	5,857,957	01-12-1999	Lin	
	30.	5,984,854	11-16-1999	Ishikawa et al.	
	31.	6,009,878	01-04-2000	Weijand et al.	
	32.	6,024,691	02-15-2000	Tepper et al.	
	33.	6,029,090	02-22-2000	Herbst	
	34.	6,032,677	03-07-2000	Blechman et al.	
	35.	6,066,084	05-23-2000	Edrich et al.	
	36.	6,086,525	07-11-2000	Davey et al.	
	37.	6,088,619	07-11-2000	Hein et al.	
	38.	6,123,658	09-26-2000	Schweighofer et al.	

Examiner Signature		Date Considered	

Substitute for form 1449/PTO

INFORMATION DISCLOSURE STATEMENT BY APPLICANT

(Use as many sheets as necessary)

Sheet	2	of	11

Complete If Known	
Application Number	12/508,529
Filing Date	July 23, 2009
First Named Inventor	Daniel Rogers BURNETT
Art Unit	3766
Examiner Name	Not Yet Assigned
Attorney Docket Number	EMKNNZ00301

	39.	6,143,035	11-07-2000	McDowell	
	40.	6,155,966	12-05-2000	Parker	
	41.	6,179,770	01-30-2001	Mould	
	42.	6,190,893	02-20-2001	Shastri et al.	
	43.	6,200,259	03-13-2001	March	
	44.	6,213,933	04-10-2001	Lin	
	45.	6,219,575	04-17-2001	Nemati	
	46.	6,256,533	07-03-2001	Yuzhakov et al.	
	47.	6,261,221	07-17-2001	Tepper et al.	
	48.	6,312,612	11-06-2001	Sherman et al.	
	49.	6,334,856	01-01-2002	Allen et al.	
	50.	6,349,233	02-19-2002	Adams	
	51.	6,379,324	04-30-2002	Gartstein et al.	
	52.	6,440,096	08-27-2002	Lastovich et al.	
	53.	6,443,883	09-03-2002	Ostrow et al.	
	54.	6,451,240	09-17-2002	Sherman et al.	
	55.	6,471,903	10-29-2002	Sherman et al.	
	56.	6,473,652	10-29-2002	Sarwal et al.	
	57.	6,491,620	12-10-2002	Davey	
	58.	6,493,588	12-10-2002	Malaney et al.	
	59.	6,500,110	12-31-2002	Davey et al.	
	60.	6,503,231	01-07-2003	Prausnitz et al.	
	61.	6,511,463	01-28-2003	Wood et al.	
	62.	6,527,694	03-04-2003	Ishikawa et al.	
	63.	6,533,949	03-18-2003	Yeshurun et al.	
	64.	6,537,242	03-25-2003	Palmer	
	65.	6,553,263	04-22-2003	Meadows et al.	
	66.	6,558,361	05-06-2003	Yeshurun	
	67.	6,565,532	05-20-2003	Yuzhakov et al.	
	68.	6,582,393	06-24-2003	Sage, Jr.	
	69.	6,591,124	07-08-2003	Sherman et al.	
	70.	6,595,947	07-22-2003	Mikszta et al.	
	71.	6,603,987	08-05-2003	Whitson	
	72.	6,611,707	08-26-2003	Prausnitz et al.	
	73.	6,623,457	09-23-2003	Rosenberg	
	74.	6,652,443	11-25-2003	Struppler et al.	
	75.	6,652,478	11-25-2003	Gartstein et al.	
	76.	6,654,636	11-25-2003	Dev et al.	
	77.	6,656,147	12-02-2003	Gertsek et al.	
	78.	6,663,556	12-16-2003	Barker	
	79.	6,663,820	12-16-2003	Arias et al.	
	80.	6,671,527	12-30-2003	Petersson et al.	

Examiner Signature		Date Considered	

Substitute for form 1449/PTO

INFORMATION DISCLOSURE STATEMENT BY APPLICANT

(Use as many sheets as necessary)

Sheet	3	of	11

Complete If Known	
Application Number	12/508,529
Filing Date	July 23, 2009
First Named Inventor	Daniel Rogers BURNETT
Art Unit	3766
Examiner Name	Not Yet Assigned
Attorney Docket Number	EMKNNZ00301

	81.	6,678,556	01-13-2004	Nolan et al.	
	82.	6,684,106	01-27-2004	Herbst	
	83.	6,689,100	02-10-2004	Connelly et al.	
	84.	6,690,959	02-10-2004	Thompson	
	85.	6,697,669	02-24-2004	Dev et al.	
	86.	6,701,185	03-02-2004	Burnett et al.	
	87.	6,735,474	05-11-2004	Loeb et al.	
	88.	6,743,211	06-01-2004	Prausnitz et al.	
	89.	6,767,341	07-27-2004	Cho	
	90.	6,770,022	08-03-2004	Mechlenburg et al.	
	91.	6,770,480	08-03-2004	Canham	
	92.	6,790,372	09-14-2004	Roy et al.	
	93.	6,808,506	10-26-2004	Lastovich et al.	
	94.	6,835,184	12-28-2004	Sage et al.	
	95.	6,866,659	03-15-2005	Nemati	
	96.	6,881,203	04-19-2005	Delmore et al.	
	97.	6,899,838	05-31-2005	Lastovich	
	98.	6,908,453	06-21-2005	Fleming et al.	
	99.	6,926,660	08-09-2005	Miller	
	100.	6,931,277	08-16-2005	Yuzhakov et al.	
	101.	6,939,311	09-06-2005	Geiger	
	102.	6,941,171	09-06-2005	Mann et al.	
	103.	6,960,193	11-01-2005	Rosenberg	
	104.	6,962,772	11-08-2005	Liu et al.	
	105.	6,972,013	12-06-2005	Zhang et al.	
	106.	6,980,855	12-27-2005	Cho	
	107.	7,013,179	03-14-2006	Carter et al.	
	108.	7,027,478	04-11-2006	Ackley	
	109.	7,045,069	05-16-2006	Ozeryansky	
	110.	7,047,070	05-16-2006	Wilkinson et al.	
	111.	7,048,723	05-23-2006	Frazier et al.	
	112.	7,079,355	07-18-2006	Hsiao et al.	
	113.	7,083,592	08-01-2006	Lastovich et al.	
	114.	7,104,947	09-12-2006	Riehl	
	115.	7,115,108	10-03-2006	Wilkinson et al.	
	116.	7,117,034	10-03-2006	Kronberg	
	117.	7,130,696	10-31-2006	Carter et al.	
	118.	7,132,054	11-07-2006	Kravitz et al.	
	119.	7,153,256	12-26-2006	Riehl et al.	
	120.	7,226,439	06-05-2007	Prausnitz et al.	
	121.	7,262,068	08-28-2007	Roy et al.	
	122.	7,273,474	09-25-2007	Chang et al.	

Examiner Signature		Date Considered	

Substitute for form 1449/PTO

INFORMATION DISCLOSURE STATEMENT BY APPLICANT

(Use as many sheets as necessary)

Sheet	4	of	11

Complete If Known	
Application Number	12/508,529
Filing Date	July 23, 2009
First Named Inventor	Daniel Rogers BURNETT
Art Unit	3766
Examiner Name	Not Yet Assigned
Attorney Docket Number	EMKNNZ00301

	123.	7,285,113	10-23-2007	Yeshurun	
	124.	7,315,758	01-01-2008	Kwiatkowski et al.	
	125.	7,316,665	01-08-2008	Laurent et al.	
	126.	7,320,664	01-22-2008	Riehl et al.	
	127.	7,332,197	02-19-2008	Wood et al.	
	128.	7,332,339	02-19-2008	Canham	
	129.	7,344,499	03-18-2008	Prausnitz et al.	
	130.	7,367,936	05-06-2008	Myers et al.	
	131.	7,396,326	07-08-2008	Ghiron et al.	
	132.	7,410,476	08-12-2008	Wilkinson et al.	
	133.	7,415,299	08-19-2008	Zimmermann et al.	
	134.	7,416,541	08-26-2008	Yuzhakov et al.	
	135.	7,429,333	09-30-2008	Chiou et al.	
	136.	7,473,244	01-06-2009	Frazier et al.	
	137.	7,481,337	01-27-2009	Luharuka et al.	
	138.	7,497,980	03-03-2009	Xu et al.	
	139.	7,500,911	03-10-2009	Johnson et al.	
	140.	7,520,848	04-21-2009	Schneider et al.	
	141.	7,530,968	05-12-2009	Gonnelli	
	142.	7,556,615	07-07-2009	Pettis et al.	
	143.	7,556,821	07-07-2009	Ameri et al.	
	144.	7,560,036	07-14-2009	Golubovic-Liakopoulos et al.	
	145.	7,570,992	08-04-2009	Nolan et al.	
	146.	7,572,405	08-11-2009	Sherman et al.	
	147.	7,574,256	08-11-2009	Carter	
	148.	7,578,954	08-25-2009	Gartstein et al.	
	149.	7,582,069	09-01-2009	Laurent et al.	
	150.	7,588,552	09-15-2009	Yeshurun et al.	
	151.	7,591,806	09-22-2009	Xu	
	152.	7,627,938	12-08-2009	Kim et al.	
	153.	7,647,112	01-12-2010	Tracey et al.	
	154.	7,648,484	01-19-2010	Yeshurun et al.	
	155.	7,651,946	01-26-2010	Wilke et al.	
	156.	7,658,728	02-09-2010	Yuzhakov	
	157.	2002/0082465	06-27-2002	Bashford et al.	
	158.	2002/0099323	07-25-2002	DEV et al.	
	159.	2002/0111777	08-15-2002	David	
	160.	2002/0133129	09-19-2002	Arias et al.	
	161.	2003/0028072	02-06-2003	Fischell et al.	
	162.	2003/0158583	08-21-2003	Burnett et al.	
	163.	2003/0158585	08-21-2003	Burnett	
	164.	2003/0216729	11-20-2003	Marchitto et al.	

Examiner Signature		Date Considered	

Substitute for form 1449/PTO

INFORMATION DISCLOSURE STATEMENT BY APPLICANT

(Use as many sheets as necessary)

Sheet	5	of	11

Complete If Known	
Application Number	12/508,529
Filing Date	July 23, 2009
First Named Inventor	Daniel Rogers BURNETT
Art Unit	3766
Examiner Name	Not Yet Assigned
Attorney Docket Number	EMKNNZ00301

	165.	2004/0092860	05-13-2004	Dev et al.	
	166.	2004/0111139	06-10-2004	McCreery	
	167.	2004/0138517	07-15-2004	Osorio et al.	
	168.	2004/0146611	07-29-2004	Arias et al.	
	169.	2004/0147964	07-29-2004	Nolan et al.	
	170.	2004/0210254	10-21-2004	Burnett et al.	
	171.	2004/0210282	10-21-2004	Flock et al.	
	172.	2005/0029223	02-10-2005	Yeshurun	
	173.	2005/0099290	05-12-2005	Govari	
	174.	2005/0171576	08-04-2005	Williams et al.	
	175.	2005/0277998	12-15-2005	Tracey et al.	
	176.	2006/0004244	01-05-2006	Phillips et al.	
	177.	2006/0016452	01-26-2006	Goetz et al.	
	178.	2006/0052839	03-09-2006	Kim et al.	
	179.	2006/0084938	04-20-2006	Zhang et al.	
	180.	2006/0122454	06-08-2006	Riehl et al.	
	181.	2006/0122660	06-08-2006	Boveja et al.	
	182.	2006/0161039	07-20-2006	Juliana et al.	
	183.	2006/0199159	09-07-2006	Ghiron et al.	
	184.	2007/0021803	01-25-2007	Deem et al.	
	185.	2007/0027353	02-01-2007	Ghiron et al.	
	186.	2007/0027354	02-01-2007	Riehl et al.	
	187.	2007/0027355	02-01-2007	Riehl et al.	
	188.	2007/0142885	06-21-2007	Hantash et al.	
	189.	2007/0208212	09-06-2007	Dilorenzo	
	190.	2007/0276318	11-29-2007	Henley	
	191.	2007/0282246	12-06-2007	Henley	
	192.	2008/0063866	03-13-2008	Allen et al.	
	193.	2008/0114199	05-15-2008	Riehl et al.	
	194.	2008/0177128	07-24-2008	Riehl et al.	
	195.	2008/0183070	07-31-2008	Unal et al.	
	196.	2008/0200748	08-21-2008	Testani et al.	
	197.	2008/0224808	09-18-2008	Ghiron et al.	
	198.	2008/0262287	10-23-2008	Dussau	
	199.	2008/0306325	12-11-2008	Burnett et al.	
	200.	2008/0312725	12-18-2008	Penner	
	201.	2009/0073991	03-19-2009	Landrum et al.	
	202.	2009/0076336	03-19-2009	Mazar et al.	
	203.	2009/0076340	03-19-2009	Libbus et al.	
	204.	2009/0076344	03-19-2009	Libbus et al.	
	205.	2009/0076345	03-19-2009	Manicka et al.	
	206.	2009/0076363	03-19-2009	Bly et al.	

Examiner Signature		Date Considered	

Substitute for form 1449/PTO

INFORMATION DISCLOSURE STATEMENT BY APPLICANT

(Use as many sheets as necessary)

Sheet	6	of	11

Complete If Known	
Application Number	12/508,529
Filing Date	July 23, 2009
First Named Inventor	Daniel Rogers BURNETT
Art Unit	3766
Examiner Name	Not Yet Assigned
Attorney Docket Number	EMKNNZ00301

	207.	2009/0076364	03-19-2009	Libbus et al.	
	208.	2009/0076397	03-19-2009	Libbus et al.	
	209.	2009/0076410	03-19-2009	Libbus et al.	
	210.	2009/0076559	03-19-2009	Libbus et al.	
	211.	2009/0076565	03-19-2009	Surwit	
	212.	2009/0118777	05-07-2009	Iki et al.	
	213.	2009/0132018	05-21-2009	DiUbaldi et al.	
	214.	2009/0162570	06-25-2009	Swenberg et al.	
	215.	2009/0171236	07-02-2009	Davies	
	216.	2009/0227829	09-10-2009	Burnett et al.	
	217.	2009/0227831	09-10-2009	Burnett et al.	
	218.	2009/0234179	09-17-2009	Burnett et al.	
	219.	2009/0234410	09-17-2009	Libbus et al.	
	220.	2009/0264792	10-22-2009	Mazar	
	221.	2009/0292194	11-26-2009	Libbus et al.	
	222.	2010/0049021	02-25-2010	Jina et al.	
	223.	2010/0056881	03-04-2010	Libbus et al.	
	224.	2010/0160712	06-24-2010	Burnett et al.	
	225.	2010/0161005	06-24-2010	Wahlgren et al.	
	226.	2010/0204538	08-12-2010	Burnett et al.	
	227.	2010/0222629	09-02-2010	Burnett et al.	
	228.	2010/0222630	09-02-2010	Mangrum et al.	
	229.	2011/0021863	01-27-2011	Burnett et al.	
	230.	D571920	06-24-2008	Juliana et al.	

FOREIGN PATENT DOCUMENTS

Examiner Initials*	Cite No.[1]	Foreign Patent Document Country Code[3]-Number[4]-Kind Code[5] *(if known)*	Publication Date MM-DD-YYYY	Name of Patentee or Applicant of Cited Document	Pages, Columns, Lines, Where Relevant Passages or Relevant Figures Appear	T[6]
	231.	GB 0637560	05-24-1950	PANNELL		
	232.	GB 2298370	09-04-1996	THE MAGSTIM COMPANY LIMITED		
	233.	GB 2336544	10-27-1999	THE MAGSTIM COMPANY LIMITED		
	234.	WO 2003/070317	08-28-2003	THERA NOVA LLC		
	235.	WO 2008/032279	03-20-2008	KONINKLIJKE PHILIPS ELECTRONICS N.V.		
	236.	WO 2008/042902	04-10-2008	EMKINETICS, INC.		
	237.	WO 2008/115426	09-25-2008	BOSTON SCIENTIFIC NEUROMODULATION CORPORATION		
	238.	WO 2011/011748	01-27-2011	EMKINETICS, INC.		
	239.	WO 2011/011749	01-27-2011	EMKINETICS, INC.		

Examiner Signature		Date Considered	

Substitute for form 1449/PTO				Complete If Known	
INFORMATION DISCLOSURE STATEMENT BY APPLICANT				Application Number	12/508,529
				Filing Date	July 23, 2009
				First Named Inventor	Daniel Rogers BURNETT
				Art Unit	3766
(Use as many sheets as necessary)				Examiner Name	Not Yet Assigned
Sheet	7	of	11	Attorney Docket Number	EMKNNZ00301

*EXAMINER: Initial if information considered, whether or not citation is in conformance with MPEP 609. Draw line through citation if not in conformance and not considered. Include copy of this form with next communication to applicant. [1] Applicant's unique citation designation number (optional). [2] See Kinds Codes of USPTO Patent Documents at www.uspto.gov or MPEP 901.04. [3] Enter Office that issued the document, by the two-letter code (WIPO Standard ST.3). [4] For Japanese patent documents, the indication of the year of the reign of the Emperor must precede the serial number of the patent document. [5] Kind of document by the appropriate symbols as indicated on the document under WIPO Standard ST. 16 if possible. [6] Applicant is to place a check mark here if English language Translation is attached.

NON PATENT LITERATURE DOCUMENTS			
Examiner Initials*	Cite No.[1]	Include name of the author (in CAPITAL LETTERS), title of the article (when appropriate), title of the item (book, magazine, journal, serial, symposium, catalog, etc.), date, page(s), volume-issue number(s), publisher, city and/or country where published.	T[2]
	240.	"Bioflex® RX754P, Single Coated Medical Pressure Sensitive Adhesive Tape," *Technical Data*, 2 pages, December 2005.	
	241.	3M Corporation, "3M™ XYZ/Isotropic Electrically Conductive Adhesive Transfer Tape 9707, *3M Electronics Markets Materials Division*, 60-5002-0350-4, 8 pages, 2004, 3M.	
	242.	AARON, Roy K. et al., "Therapeutic Effects of Electromagnetic Fields in the Stimulation of Connective Tissue Repair," *Journal of Cellular Biography*, 52(1):42-6, May 1993, Wiley-Liss, Inc.	
	243.	AmGel Technologies, "AG603 Sensing Gel, Sensing Gel Designed for ECG Applications," AG603-3/10, 1 page, 2010.	
	244.	AmGel Technologies, "AG702 Stimulating Gel, Stimulating Gel Designed for carbon film," AG702-02/06, 1 page, 2006.	
	245.	AmGel Technologies, "AG902-184/229 Grounding Gel, Grounding Gel Designed for Electrosurgical Pads," AG902 Series, 1 page, 2010.	
	246.	AmGel Technologies, "Release Films," 1 Page, July 25, 2006, Revision 1.	
	247.	Australian Patent Application No. 2007303223 filed October 2, 2007 in the name of EMKinetics, Inc., Office Action mailed September 7, 2010.	
	248.	BALMASEDA, Marion T. Jr., et al., "Burns in Functional Electric Stimulation: Two Case Reports," *Archives of Physical Medicine and Rehabilitation*, vol. 38., pp. 452-453, July 1987	
	249.	Biowave Corporation, "510(k) Summary for the Biowave Deepwave Neuromodulation Pain Therapy Device," 6 pages, Appendix B, December 13, 2005.	
	250.	Biowave Corporation, "510(k) Summary for the Biowave Deepwave Neuromodulation Pain Therapy Device," 7 pages, Appendix E, August 15, 2006.	
	251.	Biowave Corporation, "Percutaneous Neuromodulation Pain Therapy System," *deepwave*, RevB/080926, 2008.	
	252.	BlueCross BlueShield of Kansas City, "Percutaneous Electrical Nerve Stimulation (PENS) and Percutaneous Neuromodulation Therapy (PNT)," 7 pages, 1988.	
	253.	BODHALE, D.W. et al., "Design, fabrication and analysis of silicon microneedles for transdermal drug delivery applications," *Proceedings of the 3rd International Conference on the Development of BME in Vietnam*, pages 84-88, January 11-14 2010.	
	254.	BRUCE, C.J. et al., "Intracardiac Echocardiography," *European Journal*	

Examiner Signature		Date Considered	

Substitute for form 1449/PTO				Complete If Known	
INFORMATION DISCLOSURE STATEMENT BY APPLICANT				Application Number	12/508,529
				Filing Date	July 23, 2009
				First Named Inventor	Daniel Rogers BURNETT
				Art Unit	3766
(Use as many sheets as necessary)				Examiner Name	Not Yet Assigned
Sheet	8	of	11	Attorney Docket Number	EMKNNZ00301

		Echocardiography, Volume 2, pages 234-244, 2001, The European Society of Cardiology.	
	255.	CABODEVILA, G. et al., "An overview on drug delivery using microneedles", *Institute FEMTO-ST, Dept LPMO,* 24 pages, October 2005, Workshop Micro Dosing Systems.	
	256.	CERTIFIED PULSED SIGNAL THERAPY CENTERS, http://www.certifiedpst.com, 10 pages.	
	257.	CHOI, S. et al., "Microneedle Electrode Array for Electroporation of Skin for Gene Therapy," 2 pages, 2005, Controlled Release Society 32nd Annual Meeting and Exposition TRANSACTIONS.	
	258.	CURLEY, S. et al., "Radiofrequency Ablation of Unresectable Primary and Metastatic Hepatic Malignancies," *Annals of Surgery*, Volume 230(1):1-8, 1999 Lippincott Williams & Wilkins, Inc.	
	259.	CystoMedix, Inc., "Percutaneous Tibial Nerve Stimulation via Urgent ® PC Neuromodulation System - An Emerging Technology for managing Overactive Bladder," *Business Briefing: Global Surgery*, 6 pages, 2004.	
	260.	EBI, L.P., EBI BONE HEALING SYSTEM, http://www.ebimedical.com/products/fracture/bonehealing.html, 5 pages.	
	261.	Fallon Community Health Plan, "Spinal Cord Stimulation," 4 pages, 2006.	
	262.	GRUNDFEST H. et al., "Stainless Steel Micro-Needle Electrodes Made by Electrolytic Pointing," *Review of Scientific Instruments*, Volume 21(4):2 pages, 1950, American Institute of Physics.	
	263.	HARVINDER S. Gill et al., "Effect of microneedle design on pain in human subjects," *NIH Public Access Author Manuscript*, 24(7): 585-594, September 2008, Clinical Journal of Pain.	
	264.	HUBER, D.E. et al., "Popliteal Vein Compression Under General Anaesthesia," *European Journal of Vascular and Endovascular Surgery*, Volume 37, pages 464-469, 2009, Elsevier Ltd.	
	265.	International Patent Application No. PCT/US2007/080196 in the name of EMKINETICS, INC. filed October 2, 2007, International Search Report and Written Opinion mailed April 24, 2008.	
	266.	International Patent Application No. PCT/US2010/043142 in the name of EMKINETICS, INC. filed July 23, 2010, International Search Report and Written Opinion mailed September 24, 2010.	
	267.	International Patent Application No. PCT/US2010/043143 in the name of EMKINETICS, INC. filed July 23, 2010, International Search Report and Written Opinion mailed September 15, 2010.	
	268.	International Patent Application No. PCT/US2010/054167 in the name of EMKINETICS, INC. filed October 26, 2010, International Search Report and Written Opinion mailed December 23, 2010.	
	269.	International Patent Application No. PCT/US2010/054353 in the name of EMKINETICS, INC. filed October 27, 2010, International Search Report and Written Opinion mailed December 28, 2010.	

Examiner Signature		Date Considered	

Substitute for form 1449/PTO

INFORMATION DISCLOSURE STATEMENT BY APPLICANT

(Use as many sheets as necessary)

Sheet	9	of	11

Complete If Known	
Application Number	12/508,529
Filing Date	July 23, 2009
First Named Inventor	Daniel Rogers BURNETT
Art Unit	3766
Examiner Name	Not Yet Assigned
Attorney Docket Number	EMKNNZ00301

	270.	ISSEROFF, Roslyn R. et al., "Beta Adrenergic Receptor (βAR) Signaling as a novel target for optimizing skin wound healing", 5 pages.	
	271.	JACOBSON, Jerry I. et al., "Low-Amplitude, Extremely Low Frequency Magnetic Fields for the Treatment of Osteoarthritic Knees: A Double-Blind Clinical Study," *Electromagnetic Fields and Human Health. Fundamental and Applied Research*, pp. 363-364, September 17-24 2002, Proceedings of the Third International Conference.	
	272.	JASPER, H. et al., "Unipolar Electromyograms of Normal and Denervated Human Muscle," pages 231-244, October 12, 1948, Department of Neurology and Neurosurgery, McGill University, and Montreal Neurological Institute.	
	273.	KRAVITZ, S. et al., "Microneedles for *In-Situ/In-vivo* Electrochemical Sensor Applications, 1 page, Sandia National Laboratories.	
	274.	KURTZKE, John F., "Epidemiology of Spinal Cord Injury," *IV Panamerican Congress of Neurology*, 18(2-3): 157-90, 93, 1975.	
	275.	LIN et al., "Magnetic Stimulation of the Bladder in Dogs," AAEM Annual Meeting 1993, *Muscle & Nerve,* October 1993 (Abstract)	
	276.	LUTTGE, R. "Microneedle array electrode for human EEG recording," IFMBE Proceedings 22, pages 1246-1249, 2008, Springer-Verlag Berlin Heidelberg 2009.	
	277.	MAASS et al., "Contactless Nerve Stimulation and Signal Detection by Inductive Transducer," *Symposium on Application of Magnetism in Bioengineering*, 1969.	
	278.	MCFARLANE, J.P. et al., "Acute Suppression of Idiopathic Detrusor Instability with Magnetic Stimulation of the Sacral Nerve Roots," *British Journal of Urology*, 80(5): 734-41, November 1997.	
	279.	MORRISON, P.R. et al., "Radiofrequency Ablation of Thoracic Lesions: Part I, Experiments in the Normal Porcine Thorax," *American Journal of Roentgenology*, 2005;184:375–380, February 2005, American Roentgen Ray Society.	
	280.	NeuroStar TMS Therapy, "NeuroStar TMS Therapy® Recipient of Medical Design Excellence Award, *PRNewswire*, 3 pages, April 2009.	
	281.	Newmark, Inc., "Standard Products, Highest Quality Components, Designed & Produced Exclusively for Electrode Manufacturers," *Innovation by Design Newmark*, 2 pages, www.newmarkine.com/std_prods.htm, printed on May 3, 2010.	
	282.	NOBLE, J.H. et al., "Automatic segmentation of the facial nerve and chorda tympani in CT images using spatially dependent features values", Medical Phsysics, Volume 35(12), pages 5375-5384, December 2008, American Association Physical Medicine.	
	283.	PATEL, G. et al., "Microneedles: The option for painless delivery," www.pharmainfo.net/reviews/microneedles-option-painless-delivery, 6 pages, printed on September 9, 2008.	
	284.	*PubMed, U.S. National Library of Medicine National Institutes of Health*, microneedle array electrode - Pub Med results, www.ncbi.nlm.nig.gov/sites/entrez, 2 pages, Search performed on April 22, 2010.	
	285.	*PubMed, U.S. National Library of Medicine National Institutes of Health*, microneedle electrode - Pub Med results, www.ncbi.nlm.nig.gov/sites/entrez, 7 pages, Search performed on April 22, 2010.	
	286.	SCHAEFER, O. et al., "CT-guided radiofrequency ablation of a bronchogenic	

Examiner Signature		Date Considered	

Substitute for form 1449/PTO

INFORMATION DISCLOSURE STATEMENT BY APPLICANT

(Use as many sheets as necessary)

Sheet	10	of	11

Complete If Known	
Application Number	12/508,529
Filing Date	July 23, 2009
First Named Inventor	Daniel Rogers BURNETT
Art Unit	3766
Examiner Name	Not Yet Assigned
Attorney Docket Number	EMKNNZ00301

		carcinoma," *The British Journal of Radiology*, 76 (2003), pages 268-270, 2003, The British Institute of Radiology.	
	287.	SHAFIK, Ahmed, "Magnetic Stimulation: A Novel Method for Inducing Evacuation of the Neuropathic Rectum and Urinary Bladder in a Canine Model," *Urology* 54(2): 368-372, August 1999.	
	288.	SHERIDAN, MT. et al., "Pretreatment apoptosis in carcinoma of the cervix correlates with changes in tumour oxygenation during radiotherapy," *British Journal of Cancer*, 82(6):1177-1182, 2000 Cancer Research Campaign.	
	289.	SIVAGANGABALAN, G. et al., "Comparison of Electroanatomic Contact and Noncontact Mapping of Ventricular Scar in a Postinfarct Ovine Model With Intramural Needle Electrode Recording and Histological Validation," *Circulation: Arrhythmia and Electrophysiology, Journal of the American Heart Association*, Volume 1:363-369, 2008, American Heart Association.	
	290.	SOLBIATI, L. et al., "Percutaneous US-guided Radio-Frequency Tissue Ablation of Liver Metastases: Treatment and Follow-up in 16 Patients," *Radiology*, 202(1):195-203, 1997 L.S. RSNA.	
	291.	The Magstim Company Ltd, "Air Film Coil," *Magstim*, 4 pages, 2007.	
	292.	THON, W.F. et al., "Neuromodulation of voiding dysfunction and pelvic pain," *World Journal of Urology*, Volume 9: pages 138-141, 1991, Springer-Verlag.	
	293.	TROCK, David H., "Electromagnetic Fields and Magnets Investigational Treatment for Musculoskeletal Disorders," *Rheumatic Diseases Clinics of North America*, vol. 26, No. 1., February 2000.	
	294.	TROCK, David H., et al., "The Effect of Pulsed Electromagnetic Fields in the Treatment of Osteoarthritis of the Knee and Cervical Spine. Report of Randomized, Double Blind, Placebo Controlled Trials," *The Journal of Rheumatology*, 1903-1911, 1994.	
	295.	Tyco Adhesives, "2932 Designed Adhesives," *Specialty Tape Group*, 1 page.	
	296.	U.S. Patent Application No. 12/815,348 filed June 14, 2010 in the name of Reydel et al., non-final Office Action dated February 14, 2011.	
	297.	U.S. Patent Application No.10/077,434 filed February 19, 2002 in the name of Burnett et al., non-final Office Action mailed July 2, 2003.	
	298.	U.S. Patent Application No.10/077,434 filed February 19, 2002 in the name of Burnett et al., Notice of Allowance mailed October 17, 2003.	
	299.	U.S. Patent Application No.11/332,797 filed January 27, 2006 in the name of Mangrum et al., final Office Action mailed July 27, 2009.	
	300.	U.S. Patent Application No.11/866,329 filed October 2, 2007 in the name of Burnett et al., final Office Action mailed March 16, 2010.	
	301.	U.S. Patent Application No.11/866,329 filed October 2, 2007 in the name of Burnett et al., non-final Office Action mailed June 10, 2009.	
	302.	U.S. Patent Application No.12/469,365 filed May 20, 2009 in the name of Mangrum et al., non-final Office Action mailed August 27, 2010.	
	303.	U.S. Patent Application No.12/695,087 filed January 27, 2010 in the name of Mangrum et al., non-final Office Action mailed December 23, 2010.	

Examiner Signature		Date Considered	

Substitute for form 1449/PTO **INFORMATION DISCLOSURE STATEMENT BY APPLICANT** *(Use as many sheets as necessary)*				*Complete If Known*	
				Application Number	12/508,529
				Filing Date	July 23, 2009
				First Named Inventor	Daniel Rogers BURNETT
				Art Unit	3766
				Examiner Name	Not Yet Assigned
Sheet	11	of	11	Attorney Docket Number	EMKNNZ00301

	304.	vanSonnenberg, E. et al., "Radiofrequency Ablation of Thoracic Lesions: Part 2, Initial Clinical Experience—Technical and Multidisciplinary Considerations in 30 Patients," *American Journal of Roentgenology*, 2005;184:381–390, February 2005, American Roentgen Ray Society.	
	305.	WANICH, T. et al, "A Randomized Placebo-Controlled Study To Determine Safety and Efficacy In Terms Of Pain Reduction, Increased Range Of Motion, And Reduced Pain Medications, For A Novel Percutaneous Neuromodulation Pain Therapy Device ("Deepwave®") Following Post-Operative Treatments For Total Knee Replacement Procedures,"American Academy of Orthopaedic Surgeons 2009 Annual Meeting", 6 pages, February 25-28, 2008, Biowave Corporation.	
	306.	WARWICK, K. et al., "The Application of Implant Technology for Cybernetic Systems," *Archives of Neurology*, Volume 60:1369-1373, October 2003, American Medical Association.	
	307.	WIJKSTRDA et al., "Selective Stimulation and Blocking of Sacral Nerves: Research Setup and Preliminary Results," *Annual International Conference of the IEEE Engineering in Medicine and Biology Society*, Vol. 13, No. 2, 1991.	
	308.	WILKE, N. et al., "Fabrication and Characterisation of Microneedle Electrode Arrays using Wet Etch Technologies," 5 pages, October 20-21 2004, EMN04, NMRC, University College.	
	309.	ZHAO, M., "Genetic Analysis of Electric Signal-directed Cell Movement," 33 pages, April 8, 2008, Modelling Complex Biological Systems in the Context of Genomics.	
	310.	Zoll Lifecor Corporation, "What is the LifeVest Wearable Defibrillator," http://www.lifecor.com/about_lifevest/about.asp#, 1 page, printed on January 7, 2011.	

*EXAMINER: Initial if reference considered, whether or not citation is in conformance with MPEP 609. Draw line through citation if not in conformance and not considered. Include copy of this form with next communication to applicant.

[1]Applicant's unique citation designation number (optional). [2]Applicant is to place a check mark here if English language Translation is attached.

Examiner Signature		Date Considered	

Electronic Acknowledgement Receipt

EFS ID:	9471316
Application Number:	12508529
International Application Number:	
Confirmation Number:	8186
Title of Invention:	METHOD AND APPARATUS FOR MAGNETIC INDUCTION THERAPY
First Named Inventor/Applicant Name:	Daniel Rogers Burnett
Customer Number:	40518
Filer:	Laura Lan Shires
Filer Authorized By:	
Attorney Docket Number:	EMKNNZ00301
Receipt Date:	17-FEB-2011
Filing Date:	23-JUL-2009
Time Stamp:	17:37:30
Application Type:	Utility under 35 USC 111(a)

Payment information:

Submitted with Payment	no

File Listing:

Document Number	Document Description	File Name	File Size(Bytes)/ Message Digest	Multi Part /.zip	Pages (if appl.)
1		EMKNNZ00301_20110217_IDS_.pdf	1736719 c35ef78a9676f12483559fc566ae6655e83b0c27	yes	14

	Multipart Description/PDF files in .zip description		
	Document Description	**Start**	**End**
	Transmittal Letter	1	3
	Information Disclosure Statement (IDS) Filed (SB/08)	4	14
Warnings:			
Information:			
	Total Files Size (in bytes):	1736719	

This Acknowledgement Receipt evidences receipt on the noted date by the USPTO of the indicated documents, characterized by the applicant, and including page counts, where applicable. It serves as evidence of receipt similar to a Post Card, as described in MPEP 503.

New Applications Under 35 U.S.C. 111
If a new application is being filed and the application includes the necessary components for a filing date (see 37 CFR 1.53(b)-(d) and MPEP 506), a Filing Receipt (37 CFR 1.54) will be issued in due course and the date shown on this Acknowledgement Receipt will establish the filing date of the application.

National Stage of an International Application under 35 U.S.C. 371
If a timely submission to enter the national stage of an international application is compliant with the conditions of 35 U.S.C. 371 and other applicable requirements a Form PCT/DO/EO/903 indicating acceptance of the application as a national stage submission under 35 U.S.C. 371 will be issued in addition to the Filing Receipt, in due course.

New International Application Filed with the USPTO as a Receiving Office
If a new international application is being filed and the international application includes the necessary components for an international filing date (see PCT Article 11 and MPEP 1810), a Notification of the International Application Number and of the International Filing Date (Form PCT/RO/105) will be issued in due course, subject to prescriptions concerning national security, and the date shown on this Acknowledgement Receipt will establish the international filing date of the application.

I hereby certify that this correspondence is being electronically transmitted to the USPTO on the date shown below.

Date: February 17, 2011 Signature: /Laura L. Gallagher/ (Laura L. Gallagher)

IN THE UNITED STATES PATENT AND TRADEMARK OFFICE

Application No.:	12/508,529
Confirmation No.:	8186
Filing Date:	July 23, 2009
Inventor(s):	Daniel Rogers BURNETT et al.
Title:	METHOD AND APPARATUS FOR MAGNETIC INDUCTION THERAPY
Examiner:	Not Yet Assigned
Group Art Unit:	3766

INFORMATION DISCLOSURE STATEMENT

Commissioner for Patents
P.O. Box 1450
Alexandria, VA 22313-1450

Sir:

Pursuant to 37 C.F.R. §1.97 and §1.98, Applicants submit for consideration in the above-captioned application the documents listed on the attached Form PTO/SB/08a/b. Copies of the documents were previously submitted in an Information Disclosure Statement and/or Office Action, directed to the related Application Number 11/866,329 filed October 2, 2007, and accordingly, copies are not included herewith. The Examiner is requested to make these documents of record in the application.

Related Applications

Applicants wish to bring to the Examiner's attention, related applications and patents commonly assigned to the assignee of the present invention:

U.S. Patent Application No. 10/077,434 filed February 19, 2002

U.S. Patent Application No. 11/332,797 filed January 17, 2006

U.S. Patent Application No. 11/866,329 filed October 2, 2007

U.S. Patent Application No. 12/469,358 filed May 20, 2009

U.S. Patent Application No. 12/469,365 filed May 20, 2009

U.S. Patent Application No. 12/469,625 filed May 20, 2009

U.S. Patent Application No. 12/509,304 filed July 24, 2009

U.S. Patent Application No. 12/509,345 filed July 24, 2009

U.S. Patent Application No. 12/509,362 filed July 24, 2009

U.S. Patent Application No. 12/606,941 filed October 27, 2009

U.S. Patent Application No. 12/695,087 filed January 27, 2010

U.S. Patent Application No. 12/790,619 filed May 28, 2010

This Information Disclosure Statement is submitted within three months of the application filing date or before mailing of a first Office Action on the merits; accordingly, no fee or separate requirements are required.

Applicants would appreciate the Examiner initialing and returning the Form PTO/SB/08a/b, indicating that the information has been considered and made of record herein.

The information contained in this Information Disclosure Statement under 37 C.F.R. §1.97 and §1.98 is not to be construed as a representation that: (i) a complete search has been made; (ii) additional information material to the examination of this application does not exist; (iii) the information, protocols, results and the like reported by third parties are accurate or enabling; or (iv) the above information constitutes prior art to the subject invention.

In the event the appropriate fee and/or petition is not filed herewith and the U.S. Patent and Trademark Office determines that an extension and/or other relief is required, Applicants petition for any required relief including extensions of time and authorize the

Commissioner to charge the cost of such petitions and/or other fees due in connection with this filing to **Deposit Account No. 50-3973** referencing Attorney Docket No. **EMKNNZ00301**. However, the Commissioner is not authorized to charge the cost of the issue fee to the Deposit Account.

Respectfully submitted,

/Steven M. Giovannetti/

Steven M. Giovannetti
Registration No. 51,739

Customer No. 40518
Levine Bagade Han LLP
2400 Geng Road, Suite 120
Palo Alto, CA 94303
Direct: (650) 646-2570
Fax: (650) 284-2180

UNITED STATES PATENT AND TRADEMARK OFFICE

UNITED STATES DEPARTMENT OF COMMERCE
United States Patent and Trademark Office
Address: COMMISSIONER FOR PATENTS
P.O. Box 1450
Alexandria, Virginia 22313-1450
www.uspto.gov

APPLICATION NUMBER	FILING OR 371(C) DATE	FIRST NAMED APPLICANT	ATTY. DOCKET NO./TITLE
12/508,529	07/23/2009	Daniel Rogers Burnett	EMKNNZ00301

CONFIRMATION NO. 8186

PUBLICATION NOTICE

40518
LEVINE BAGADE HAN LLP
2400 GENG ROAD, SUITE 120
PALO ALTO, CA 94303

OC000000042380369

Title:METHOD AND APPARATUS FOR MAGNETIC INDUCTION THERAPY

Publication No.US-2010-0168501-A1
Publication Date:07/01/2010

NOTICE OF PUBLICATION OF APPLICATION

The above-identified application will be electronically published as a patent application publication pursuant to 37 CFR 1.211, et seq. The patent application publication number and publication date are set forth above.

The publication may be accessed through the USPTO's publically available Searchable Databases via the Internet at www.uspto.gov. The direct link to access the publication is currently http://www.uspto.gov/patft/.

The publication process established by the Office does not provide for mailing a copy of the publication to applicant. A copy of the publication may be obtained from the Office upon payment of the appropriate fee set forth in 37 CFR 1.19(a)(1). Orders for copies of patent application publications are handled by the USPTO's Office of Public Records. The Office of Public Records can be reached by telephone at (703) 308-9726 or (800) 972-6382, by facsimile at (703) 305-8759, by mail addressed to the United States Patent and Trademark Office, Office of Public Records, Alexandria, VA 22313-1450 or via the Internet.

In addition, information on the status of the application, including the mailing date of Office actions and the dates of receipt of correspondence filed in the Office, may also be accessed via the Internet through the Patent Electronic Business Center at www.uspto.gov using the public side of the Patent Application Information and Retrieval (PAIR) system. The direct link to access this status information is currently http://pair.uspto.gov/. Prior to publication, such status information is confidential and may only be obtained by applicant using the private side of PAIR.

Further assistance in electronically accessing the publication, or about PAIR, is available by calling the Patent Electronic Business Center at 1-866-217-9197.

Office of Data Managment, Application Assistance Unit (571) 272-4000, or (571) 272-4200, or 1-888-786-0101

UNITED STATES PATENT AND TRADEMARK OFFICE

UNITED STATES DEPARTMENT OF COMMERCE
United States Patent and Trademark Office
Address: COMMISSIONER FOR PATENTS
P.O. Box 1450
Alexandria, Virginia 22313-1450
www.uspto.gov

APPLICATION NUMBER	FILING or 371(c) DATE	GRP ART UNIT	FIL FEE REC'D	ATTY.DOCKET.NO	TOT CLAIMS	IND CLAIMS
12/508,529	07/23/2009	3766	1851	EMKNNZ00301	54	7

CONFIRMATION NO. 8186

UPDATED FILING RECEIPT

40518
LEVINE BAGADE HAN LLP
2400 GENG ROAD, SUITE 120
PALO ALTO, CA 94303

OC000000040715348

Date Mailed: 03/24/2010

Receipt is acknowledged of this non-provisional patent application. The application will be taken up for examination in due course. Applicant will be notified as to the results of the examination. Any correspondence concerning the application must include the following identification information: the U.S. APPLICATION NUMBER, FILING DATE, NAME OF APPLICANT, and TITLE OF INVENTION. Fees transmitted by check or draft are subject to collection. Please verify the accuracy of the data presented on this receipt. **If an error is noted on this Filing Receipt, please submit a written request for a Filing Receipt Correction. Please provide a copy of this Filing Receipt with the changes noted thereon. If you received a "Notice to File Missing Parts" for this application, please submit any corrections to this Filing Receipt with your reply to the Notice. When the USPTO processes the reply to the Notice, the USPTO will generate another Filing Receipt incorporating the requested corrections**

Applicant(s)

Daniel Rogers Burnett, San Francisco, CA;
Christopher Hermanson, Santa Cruz, CA;

Power of Attorney: The patent practitioners associated with Customer Number 40518

Domestic Priority data as claimed by applicant

This application is a CIP of 11/866,329 10/02/2007
which claims benefit of 60/848,720 10/02/2006

Foreign Applications

If Required, Foreign Filing License Granted: 08/04/2009

The country code and number of your priority application, to be used for filing abroad under the Paris Convention, is **US 12/508,529**

Projected Publication Date: 07/01/2010

Non-Publication Request: No

Early Publication Request: No
**** SMALL ENTITY ****

Title

METHOD AND APPARATUS FOR MAGNETIC INDUCTION THERAPY

Preliminary Class

607

PROTECTING YOUR INVENTION OUTSIDE THE UNITED STATES

Since the rights granted by a U.S. patent extend only throughout the territory of the United States and have no effect in a foreign country, an inventor who wishes patent protection in another country must apply for a patent in a specific country or in regional patent offices. Applicants may wish to consider the filing of an international application under the Patent Cooperation Treaty (PCT). An international (PCT) application generally has the same effect as a regular national patent application in each PCT-member country. The PCT process **simplifies** the filing of patent applications on the same invention in member countries, but **does not result** in a grant of "an international patent" and does not eliminate the need of applicants to file additional documents and fees in countries where patent protection is desired.

Almost every country has its own patent law, and a person desiring a patent in a particular country must make an application for patent in that country in accordance with its particular laws. Since the laws of many countries differ in various respects from the patent law of the United States, applicants are advised to seek guidance from specific foreign countries to ensure that patent rights are not lost prematurely.

Applicants also are advised that in the case of inventions made in the United States, the Director of the USPTO must issue a license before applicants can apply for a patent in a foreign country. The filing of a U.S. patent application serves as a request for a foreign filing license. The application's filing receipt contains further information and guidance as to the status of applicant's license for foreign filing.

Applicants may wish to consult the USPTO booklet, "General Information Concerning Patents" (specifically, the section entitled "Treaties and Foreign Patents") for more information on timeframes and deadlines for filing foreign patent applications. The guide is available either by contacting the USPTO Contact Center at 800-786-9199, or it can be viewed on the USPTO website at http://www.uspto.gov/web/offices/pac/doc/general/index.html.

For information on preventing theft of your intellectual property (patents, trademarks and copyrights), you may wish to consult the U.S. Government website, http://www.stopfakes.gov. Part of a Department of Commerce initiative, this website includes self-help "toolkits" giving innovators guidance on how to protect intellectual property in specific countries such as China, Korea and Mexico. For questions regarding patent enforcement issues, applicants may call the U.S. Government hotline at 1-866-999-HALT (1-866-999-4158).

LICENSE FOR FOREIGN FILING UNDER

Title 35, United States Code, Section 184

Title 37, Code of Federal Regulations, 5.11 & 5.15

GRANTED

The applicant has been granted a license under 35 U.S.C. 184, if the phrase "IF REQUIRED, FOREIGN FILING LICENSE GRANTED" followed by a date appears on this form. Such licenses are issued in all applications where the conditions for issuance of a license have been met, regardless of whether or not a license may be required as

set forth in 37 CFR 5.15. The scope and limitations of this license are set forth in 37 CFR 5.15(a) unless an earlier license has been issued under 37 CFR 5.15(b). The license is subject to revocation upon written notification. The date indicated is the effective date of the license, unless an earlier license of similar scope has been granted under 37 CFR 5.13 or 5.14.

This license is to be retained by the licensee and may be used at any time on or after the effective date thereof unless it is revoked. This license is automatically transferred to any related applications(s) filed under 37 CFR 1.53(d). This license is not retroactive.

The grant of a license does not in any way lessen the responsibility of a licensee for the security of the subject matter as imposed by any Government contract or the provisions of existing laws relating to espionage and the national security or the export of technical data. Licensees should apprise themselves of current regulations especially with respect to certain countries, of other agencies, particularly the Office of Defense Trade Controls, Department of State (with respect to Arms, Munitions and Implements of War (22 CFR 121-128)); the Bureau of Industry and Security, Department of Commerce (15 CFR parts 730-774); the Office of Foreign AssetsControl, Department of Treasury (31 CFR Parts 500+) and the Department of Energy.

NOT GRANTED

No license under 35 U.S.C. 184 has been granted at this time, if the phrase "IF REQUIRED, FOREIGN FILING LICENSE GRANTED" DOES NOT appear on this form. Applicant may still petition for a license under 37 CFR 5.12, if a license is desired before the expiration of 6 months from the filing date of the application. If 6 months has lapsed from the filing date of this application and the licensee has not received any indication of a secrecy order under 35 U.S.C. 181, the licensee may foreign file the application pursuant to 37 CFR 5.15(b).

UNITED STATES PATENT AND TRADEMARK OFFICE

UNITED STATES DEPARTMENT OF COMMERCE
United States Patent and Trademark Office
Address: COMMISSIONER FOR PATENTS
P.O. Box 1450
Alexandria, Virginia 22313-1450
www.uspto.gov

APPLICATION NUMBER	FILING OR 371(C) DATE	FIRST NAMED APPLICANT	ATTY. DOCKET NO./TITLE
12/508,529	07/23/2009	Daniel Rogers Burnett	EMKNNZ00301

CONFIRMATION NO. 8186

POA ACCEPTANCE LETTER

40518
LEVINE BAGADE HAN LLP
2400 GENG ROAD, SUITE 120
PALO ALTO, CA 94303

OC000000040715283

Date Mailed: 03/24/2010

NOTICE OF ACCEPTANCE OF POWER OF ATTORNEY

This is in response to the Power of Attorney filed 03/12/2010.

The Power of Attorney in this application is accepted. Correspondence in this application will be mailed to the above address as provided by 37 CFR 1.33.

/mbayou/

Office of Data Management, Application Assistance Unit (571) 272-4000, or (571) 272-4200, or 1-888-786-0101

I hereby certify that this correspondence is being electronically transmitted to the USPTO on the date shown below.

Date: March 12, 2010 Signature: _____ (Kym Y. Moore)

IN THE UNITED STATES PATENT AND TRADEMARK OFFICE

Application No.:	12/508,529
Confirmation No.:	8186
Filing Date:	July 23, 2009
Inventor(s):	Daniel Rogers BURNETT et al.
Title:	METHOD AND APPARATUS FOR MAGNETIC INDUCTION THERAPY
Examiner:	Not Yet Assigned
Group Art Unit:	3766

RESPONSE TO NOTICE TO FILE MISSING PARTS

Mail Stop Missing Parts
Commissioner for Patent
P.O. Box 1450
Alexandria, VA 22313-1450

Sir:

This is in response to the Notice to File Missing Parts dated August 12, 2009 for which a response was due on October 12, 2009. Filed herewith is a Petition and fee for a five-month extension of time, thereby extending the deadline for response to March 12, 2010. Accordingly, this response is timely filed. Applicants respectfully submit:

1. Supplemental Application Data Sheet
2. Fully executed Declaration
3. Replacement Drawings
4. Power of Attorney with Statement under 37 CFR 3.73(b) and a copy of an executed Assignment
5. Petition for Extension of Time
6. Surcharge for a late declaration and or fees is being concurrently submitted via EFS-Web.

In the event the appropriate fee and/or petition is not filed herewith and the U.S. Patent and Trademark Office determines that an extension and/or other relief is required, Applicant petitions for any required relief including extensions of time and authorize the Commissioner to charge the cost of such petitions and/or other fees due in connection with this filing to **Deposit Account No. 50-3973** referencing Attorney Docket No. **EMKNNZ00301**. However, the Commissioner is not authorized to charge the cost of the issue fee to the Deposit Account.

Respectfully submitted,

Steven M. Giovannetti
Registration No. 51,739

Customer No. 40518
Levine Bagade Han LLP
2400 Geng Road, Suite 120
Palo Alto, CA 94303
Direct: (650) 646-2570
Fax: (650) 284-2180

Under the Paperwork Reduction Act of 1995, no persons are required to respond to a collection of information unless it contains a valid OMB control number.

Application Data Sheet 37 CFR 1.76	Attorney Docket Number	EMKNNZ00301
	Application Number	
Title of Invention	METHOD AND APPARATUS FOR MAGNETIC INDUCTION THERAPY	

The application data sheet is part of the provisional or nonprovisional application for which it is being submitted. The following form contains the bibliographic data arranged in a format specified by the United States Patent and Trademark Office as outlined in 37 CFR 1.76.
This document may be completed electronically and submitted to the Office in electronic format using the Electronic Filing System (EFS) or the document may be printed and included in a paper filed application.

Secrecy Order 37 CFR 5.2

☐ Portions or all of the application associated with this Application Data Sheet may fall under a Secrecy Order pursuant to 37 CFR 5.2 (Paper filers only. Applications that fall under Secrecy Order may not be filed electronically.)

Applicant Information:

Applicant 1 Remove

Applicant Authority ◉ Inventor ◯ Legal Representative under 35 U.S.C. 117 ◯ Party of Interest under 35 U.S.C. 118

Prefix	Given Name	Middle Name	Family Name	Suffix
	Daniel	Rogers	BURNETT	

Residence Information (Select One) ◉ US Residency ◯ Non US Residency ◯ Active US Military Service

City	San Francisco	State/Province	CA	Country of Residence i	US

Citizenship under 37 CFR 1.41(b) i US

Mailing Address of Applicant:

Address 1	588 Teresita Boulevard		
Address 2			
City	San Francisco	State/Province	CA
Postal Code	94127	Country i	US

Applicant 2 Remove

Applicant Authority ◉ Inventor ◯ Legal Representative under 35 U.S.C. 117 ◯ Party of Interest under 35 U.S.C. 118

Prefix	Given Name	Middle Name	Family Name	Suffix
	Christopher		HERMANSON	

Residence Information (Select One) ◉ US Residency ◯ Non US Residency ◯ Active US Military Service

City	Santa Cruz	State/Province	CA	Country of Residence i	US

Citizenship under 37 CFR 1.41(b) i US

Mailing Address of Applicant:

Address 1	85 Westdale Drive		
Address 2			
City	Santa Cruz	State/Province	CA
Postal Code	95060	Country i	US

All Inventors Must Be Listed - Additional Inventor Information blocks may be generated within this form by selecting the **Add** button. Add

Correspondence Information:

Enter either Customer Number or complete the Correspondence Information section below.
For further information see 37 CFR 1.33(a).

☐ **An Address is being provided for the correspondence Information of this application.**

Under the Paperwork Reduction Act of 1995, no persons are required to respond to a collection of information unless it contains a valid OMB control number.

Application Data Sheet 37 CFR 1.76	Attorney Docket Number	EMKNNZ00301
	Application Number	
Title of Invention	METHOD AND APPARATUS FOR MAGNETIC INDUCTION THERAPY	

Customer Number	40518		
Email Address	patent@lbhip.com	Add Email	Remove Email

Application Information:

Title of the Invention	METHOD AND APPARATUS FOR MAGNETIC INDUCTION THERAPY		
Attorney Docket Number	EMKNNZ00301	**Small Entity Status Claimed**	☒
Application Type	Nonprovisional		
Subject Matter	Utility		
Suggested Class (if any)		**Sub Class (if any)**	
Suggested Technology Center (if any)			
Total Number of Drawing Sheets (if any)	24	**Suggested Figure for Publication (if any)**	12

Publication Information:

☐ Request Early Publication (Fee required at time of Request 37 CFR 1.219)

☐ **Request Not to Publish.** I hereby request that the attached application not be published under 35 U.S. C. 122(b) and certify that the invention disclosed in the attached application **has not and will not** be the subject of an application filed in another country, or under a multilateral international agreement, that requires publication at eighteen months after filing.

Representative Information:

Representative information should be provided for all practitioners having a power of attorney in the application. Providing this information in the Application Data Sheet does not constitute a power of attorney in the application (see 37 CFR 1.32).
Enter either Customer Number or complete the Representative Name section below. If both sections are completed the Customer Number will be used for the Representative Information during processing.

Please Select One:	◉ Customer Number	◯ US Patent Practitioner	◯ Limited Recognition (37 CFR 11.9)
Customer Number	40518		

Domestic Benefit/National Stage Information:

This section allows for the applicant to either claim benefit under 35 U.S.C. 119(e), 120, 121, or 365(c) or indicate National Stage entry from a PCT application. Providing this information in the application data sheet constitutes the specific reference required by 35 U.S.C. 119(e) or 120, and 37 CFR 1.78(a)(2) or CFR 1.78(a)(4), and need not otherwise be made part of the specification.

Prior Application Status	Pending		Remove
Application Number	Continuity Type	Prior Application Number	Filing Date (YYYY-MM-DD)
	Continuation in part of	11866329	2007-10-02
Prior Application Status	Expired		Remove
Application Number	Continuity Type	Prior Application Number	Filing Date (YYYY-MM-DD)
11866329	non provisional of	60848720	2006-10-02

Under the Paperwork Reduction Act of 1995, no persons are required to respond to a collection of information unless it contains a valid OMB control number.

Application Data Sheet 37 CFR 1.76	Attorney Docket Number	EMKNNZ00301
	Application Number	
Title of Invention	METHOD AND APPARATUS FOR MAGNETIC INDUCTION THERAPY	

Additional Domestic Benefit/National Stage Data may be generated within this form by selecting the **Add** button. Add

Foreign Priority Information:

This section allows for the applicant to claim benefit of foreign priority and to identify any prior foreign application for which priority is not claimed. Providing this information in the application data sheet constitutes the claim for priority as required by 35 U.S.C. 119(b) and 37 CFR 1.55(a).

Remove

Application Number	Country [i]	Parent Filing Date (YYYY-MM-DD)	Priority Claimed
			◉ Yes ◯ No

Additional Foreign Priority Data may be generated within this form by selecting the **Add** button. Add

Assignee Information:

Providing this information in the application data sheet does not substitute for compliance with any requirement of part 3 of Title 37 of the CFR to have an assignment recorded in the Office.

Assignee 1 Remove

If the Assignee is an Organization check here. ☐

Prefix	**Given Name**	Middle Name	**Family Name**	Suffix

Mailing Address Information:

Address 1			
Address 2			
City		**State/Province**	
Country [i]		Postal Code	
Phone Number		Fax Number	
Email Address			

Additional Assignee Data may be generated within this form by selecting the **Add** button. Add

Signature:

A signature of the applicant or representative is required in accordance with 37 CFR 1.33 and 10.18. Please see 37 CFR 1.4(d) for the form of the signature.

Signature	/Steven M. Giovannetti/			Date (YYYY-MM-DD)	2010-03-12
First Name	Steven	Last Name	Giovannetti	Registration Number	51739

Under the Paperwork Reduction Act of 1995, no persons are required to respond to a collection of information unless it contains a valid OMB control number.

Application Data Sheet 37 CFR 1.76	Attorney Docket Number	EMKNNZ00301
	Application Number	
Title of Invention	METHOD AND APPARATUS FOR MAGNETIC INDUCTION THERAPY	

This collection of information is required by 37 CFR 1.76. The information is required to obtain or retain a benefit by the public which is to file (and by the USPTO to process) an application. Confidentiality is governed by 35 U.S.C. 122 and 37 CFR 1.14. This collection is estimated to take 23 minutes to complete, including gathering, preparing, and submitting the completed application data sheet form to the USPTO. Time will vary depending upon the individual case. Any comments on the amount of time you require to complete this form and/or suggestions for reducing this burden, should be sent to the Chief Information Officer, U.S. Patent and Trademark Office, U.S. Department of Commerce, P.O. Box 1450, Alexandria, VA 22313-1450. DO NOT SEND FEES OR COMPLETED FORMS TO THIS ADDRESS. **SEND TO: Commissioner for Patents, P.O. Box 1450, Alexandria, VA 22313-1450.**

Privacy Act Statement

The Privacy Act of 1974 (P.L. 93-579) requires that you be given certain information in connection with your submission of the attached form related to a patent application or patent. Accordingly, pursuant to the requirements of the Act, please be advised that: (1) the general authority for the collection of this information is 35 U.S.C. 2(b)(2); (2) furnishing of the information solicited is voluntary; and (3) the principal purpose for which the information is used by the U.S. Patent and Trademark Office is to process and/or examine your submission related to a patent application or patent. If you do not furnish the requested information, the U.S. Patent and Trademark Office may not be able to process and/or examine your submission, which may result in termination of proceedings or abandonment of the application or expiration of the patent.

The information provided by you in this form will be subject to the following routine uses:

1. The information on this form will be treated confidentially to the extent allowed under the Freedom of Information Act (5 U.S.C. 552) and the Privacy Act (5 U.S.C. 552a). Records from this system of records may be disclosed to the Department of Justice to determine whether the Freedom of Information Act requires disclosure of these records.

2. A record from this system of records may be disclosed, as a routine use, in the course of presenting evidence to a court, magistrate, or administrative tribunal, including disclosures to opposing counsel in the course of settlement negotiations.

3. A record in this system of records may be disclosed, as a routine use, to a Member of Congress submitting a request involving an individual, to whom the record pertains, when the individual has requested assistance from the Member with respect to the subject matter of the record.

4. A record in this system of records may be disclosed, as a routine use, to a contractor of the Agency having need for the information in order to perform a contract. Recipients of information shall be required to comply with the requirements of the Privacy Act of 1974, as amended, pursuant to 5 U.S.C. 552a(m).

5. A record related to an International Application filed under the Patent Cooperation Treaty in this system of records may be disclosed, as a routine use, to the International Bureau of the World Intellectual Property Organization, pursuant to the Patent Cooperation Treaty.

6. A record in this system of records may be disclosed, as a routine use, to another federal agency for purposes of National Security review (35 U.S.C. 181) and for review pursuant to the Atomic Energy Act (42 U.S.C. 218(c)).

7. A record from this system of records may be disclosed, as a routine use, to the Administrator, General Services, or his/her designee, during an inspection of records conducted by GSA as part of that agency's responsibility to recommend improvements in records management practices and programs, under authority of 44 U.S.C. 2904 and 2906. Such disclosure shall be made in accordance with the GSA regulations governing inspection of records for this purpose, and any other relevant (i.e., GSA or Commerce) directive. Such disclosure shall not be used to make determinations about individuals.

8. A record from this system of records may be disclosed, as a routine use, to the public after either publication of the application pursuant to 35 U.S.C. 122(b) or issuance of a patent pursuant to 35 U.S.C. 151. Further, a record may be disclosed, subject to the limitations of 37 CFR 1.14, as a routine use, to the public if the record was filed in an application which became abandoned or in which the proceedings were terminated and which application is referenced by either a published application, an application open to public inspections or an issued patent.

9. A record from this system of records may be disclosed, as a routine use, to a Federal, State, or local law enforcement agency, if the USPTO becomes aware of a violation or potential violation of law or regulation.

Docket No.: EMKNNZ00301

PTO/SB/01A (07-07)
Approved for use through 06/30/2010. OMB 0651-0032
U.S. Patent and Trademark Office; U.S. DEPARTMENT OF COMMERCE
Under the Paperwork Reduction Act of 1995, no persons are required to respond to a collection of information unless it displays a valid OMB control number.

DECLARATION (37 CFR 1.63) FOR UTILITY OR DESIGN APPLICATION USING AN APPLICATION DATA SHEET (37 CFR 1.76)

Title of Invention	METHOD AND APPARATUS FOR MAGNETIC INDUCTION THERAPY

As the below named inventor(s), I/we declare that:

This declaration is directed to:

☐ The attached application, or

☑ Application No. 12/508,529 filed on July 23, 2009

☐ As amended on _____ (if applicable);

I/we believe that I/we am/are the original and first inventor(s) of the subject matter which is claimed and for which a patent is sought;

I/we have reviewed and understand the contents of the above-identified application, including the claims, as amended by any amendment specifically referred to above;

I/we acknowledge the duty to disclose to the United States Patent and Trademark Office all information known to me/us to be material to patentability as defined in 37 CFR 1.56, including for continuation-in-part applications, material information which became available between the filing date of the prior application and the national or PCT International filing date of the continuation-in-part application.

WARNING:

Petitioner/applicant is cautioned to avoid submitting personal information in documents filed in a patent application that may contribute to identity theft. Personal information such as social security numbers, bank account numbers, or credit card numbers (other than a check or credit card authorization form PTO-2038 submitted for payment purposes) is never required by the USPTO to support a petition or an application. If this type of personal information is included in documents submitted to the USPTO, petitioners/applicants should consider redacting such personal information from the documents before submitting them to the USPTO. Petitioner/applicant is advised that the record of a patent application is available to the public after publication of the application (unless a non-publication request in compliance with 37 CFR 1.213(a) is made in the application) or issuance of a patent. Furthermore, the record from an abandoned application may also be available to the public if the application is referenced in a published application or an issued patent (see 37 CFR 1.14). Checks and credit card authorization forms PTO-2038 submitted for payment purposes are not retained in the application file and therefore are not publicly available.

All statements made herein of my/our own knowledge are true, all statements made herein on information and belief are believed to be true, and further that these statements were made with the knowledge that willful false statements and the like are punishable by fine or imprisonment, or both, under 18 U.S.C. 1001, and may jeopardize the validity of the application or any patent issuing thereon.

FULL NAME OF INVENTOR(S)

Inventor one: Daniel Rogers BURNETT Date: 11/17/09

Signature: _____ Citizen of: US

Inventor two: Christopher HERMANSON Date: 11/17/09

Signature: _____ Citizen of: US

☐ Additional inventors or a legal representative are being named on _____ additional form(s) attached hereto.

This collection of information is required by 35 U.S.C. 115 and 37 CFR 1.63. The information is required to obtain or retain a benefit by the public which is to file (and by the USPTO to process) an application. Confidentiality is governed by 35 U.S.C. 122 and 37 CFR 1.11 and 1.14. This collection is estimated to take 1 minute to complete, including gathering, preparing, and submitting the completed application form to the USPTO. Time will vary depending upon the individual case. Any comments on the amount of time you require to complete this form and/or suggestions for reducing this burden, should be sent to the Chief Information Officer, U.S. Patent and Trademark Office, U.S. Department of Commerce, P.O. Box 1450, Alexandria, VA 22313-1450. DO NOT SEND FEES OR COMPLETED FORMS TO THIS ADDRESS. **SEND TO: Commissioner for Patents, P.O. Box 1450, Alexandria, VA 22313-1450.**
If you need assistance in completing the form, call 1-800-PTO-9199 and select option 2.

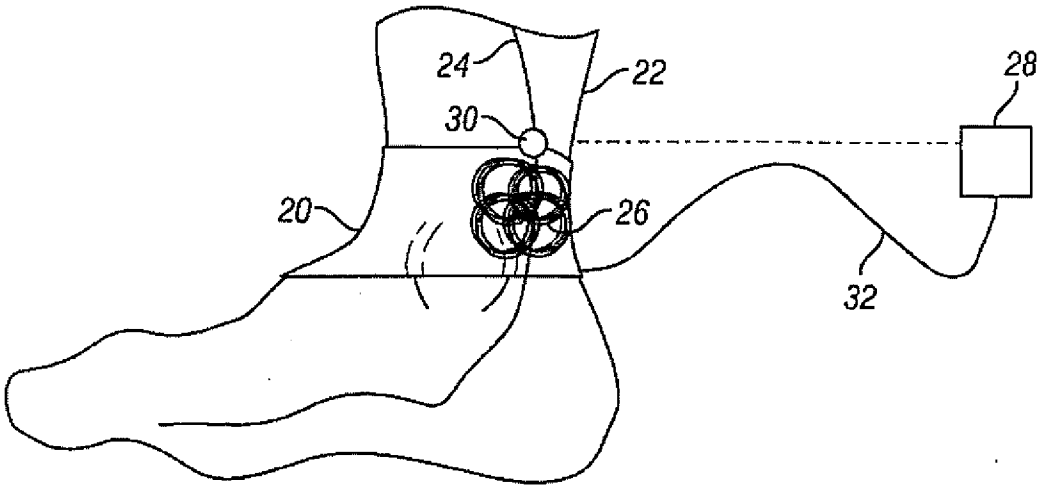

FIG. 1

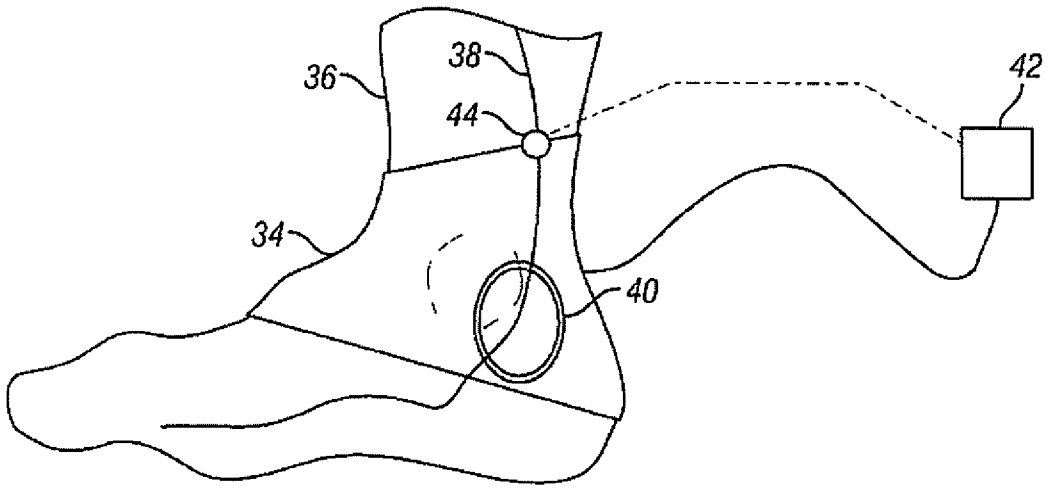

FIG. 2

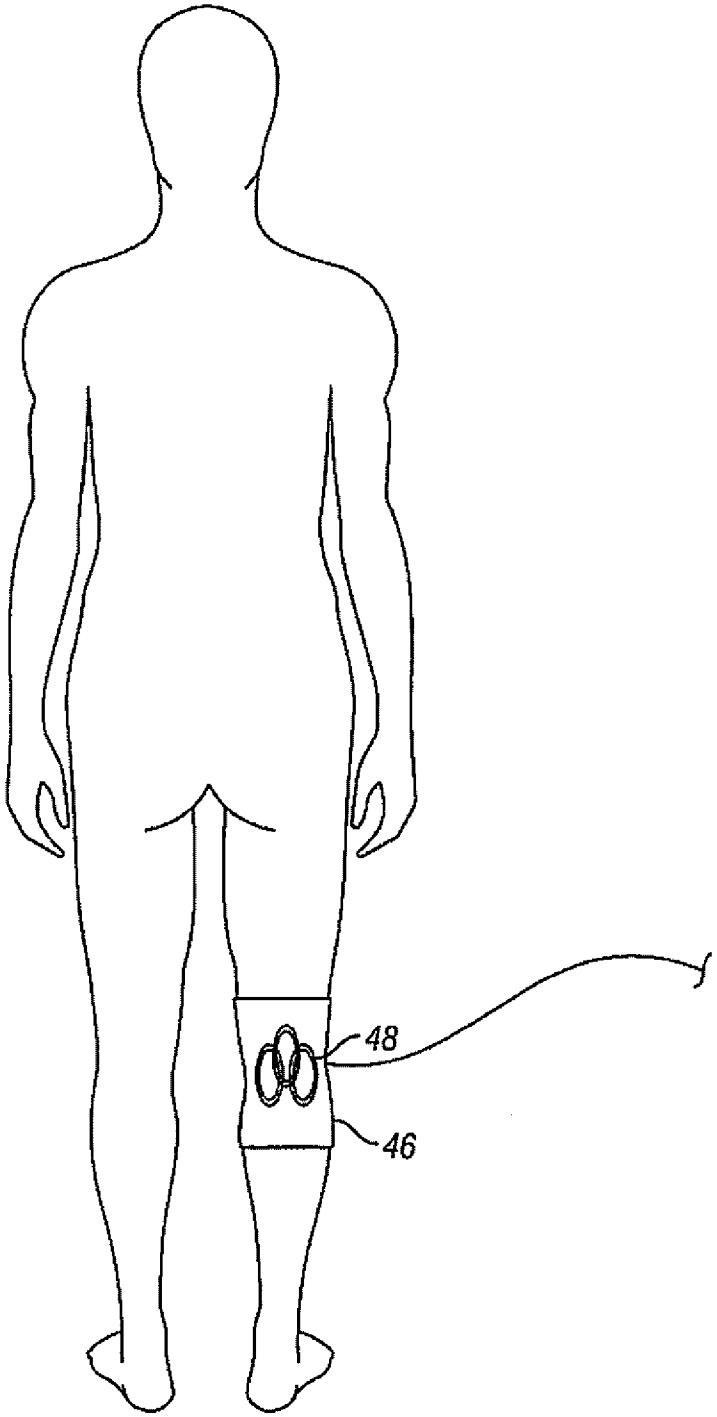

FIG. 3

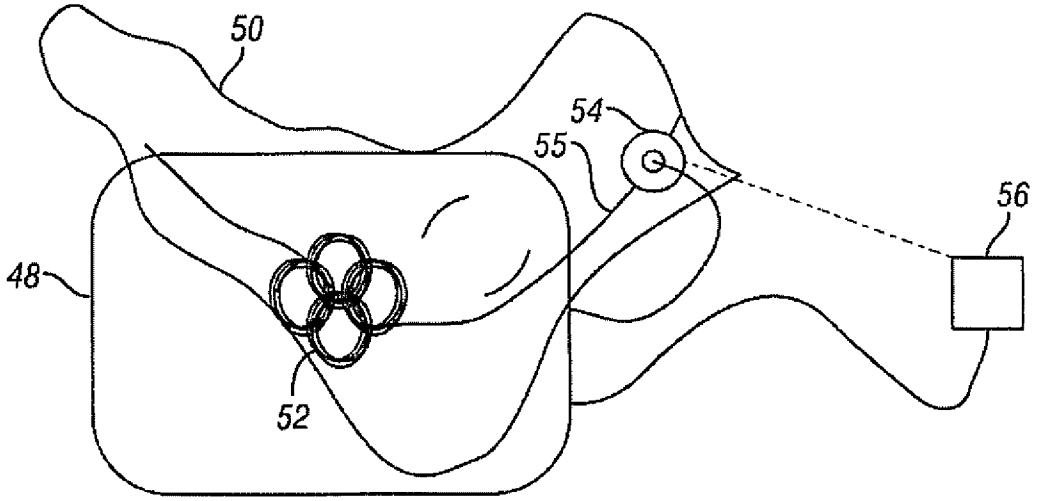

FIG. 4

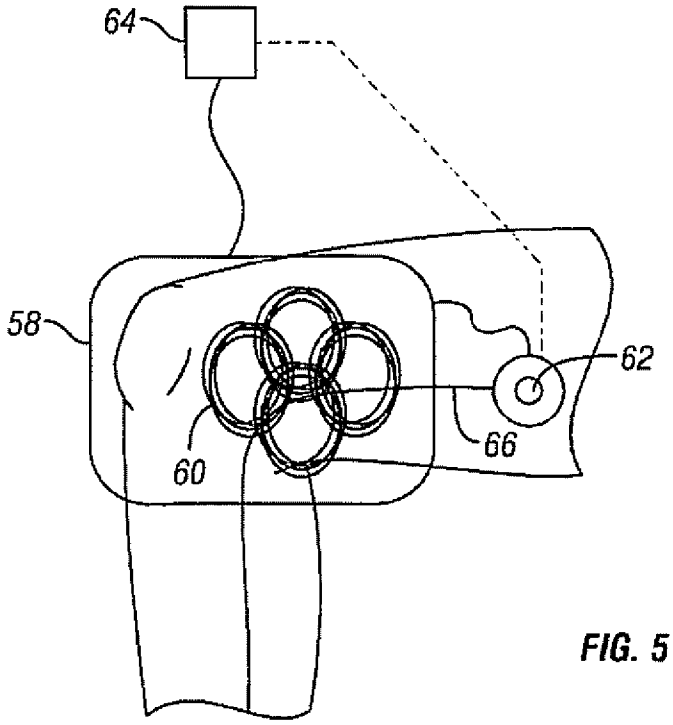

FIG. 5

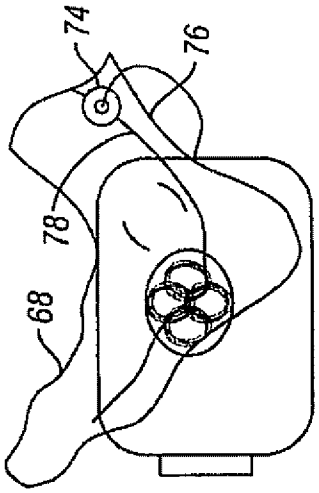

FIG. 6B

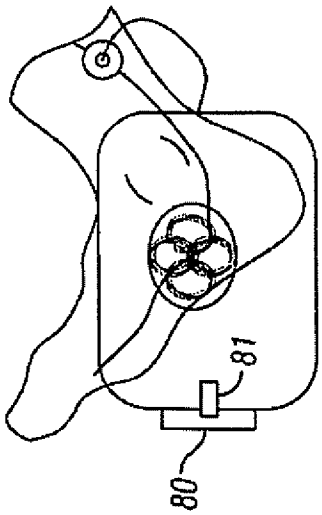

FIG. 6D

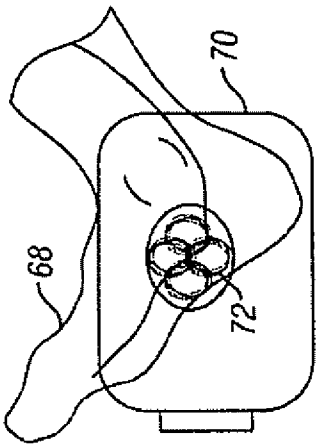

FIG. 6A

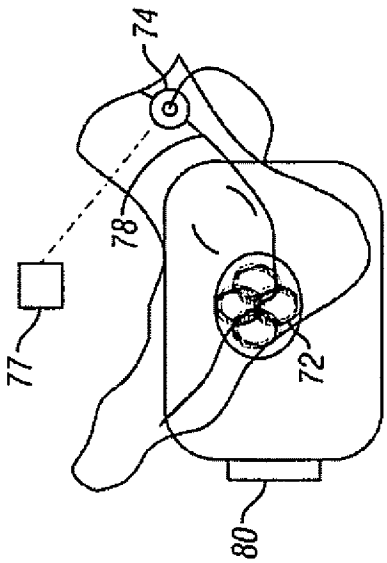

FIG. 6C

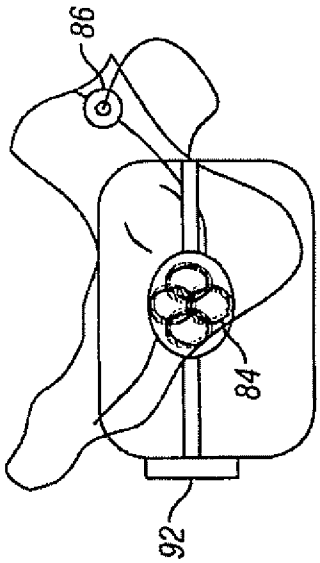

FIG. 7B

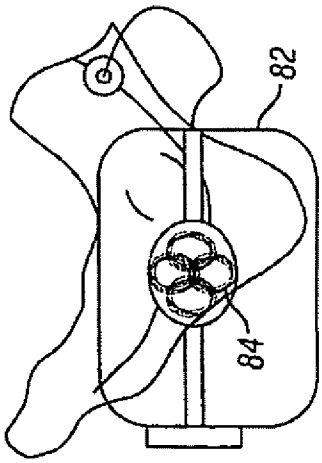

FIG. 7D

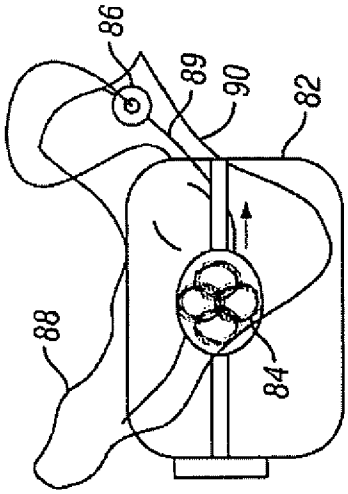

FIG. 7A

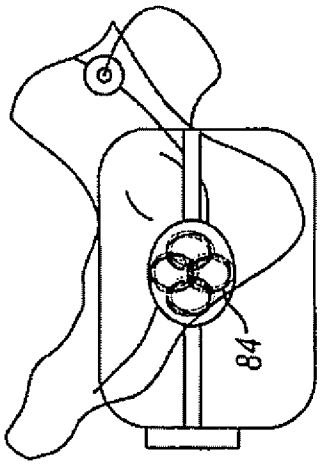

FIG. 7C

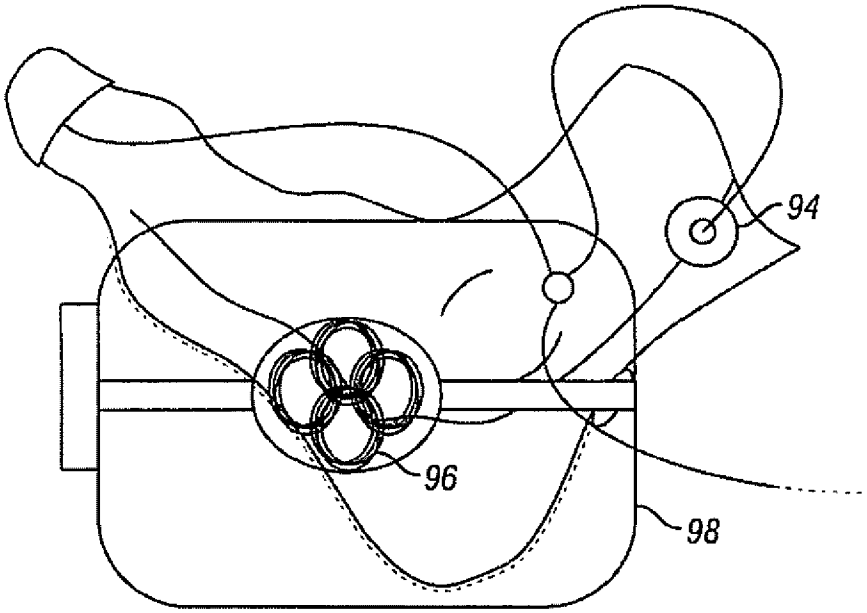

FIG. 8

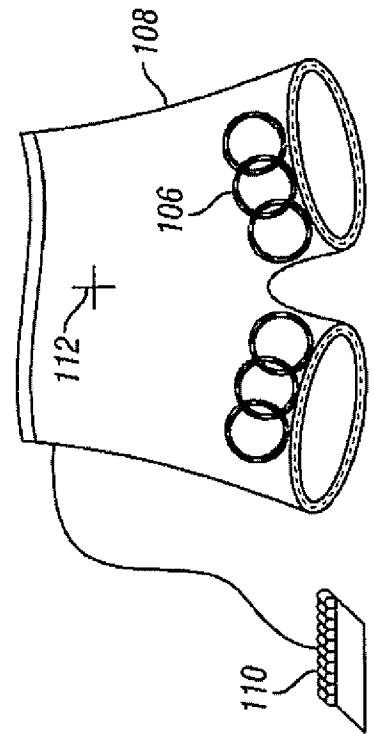

FIG. 9B

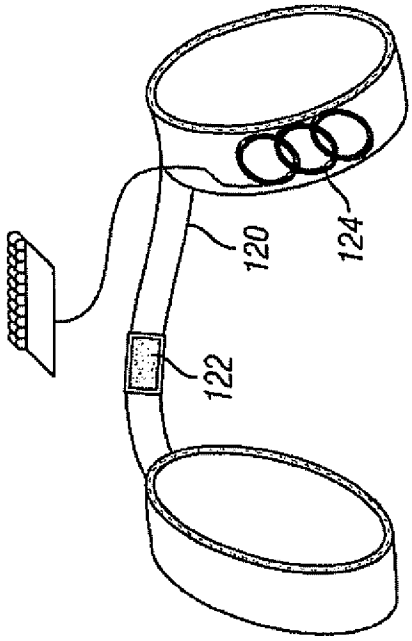

FIG. 9D

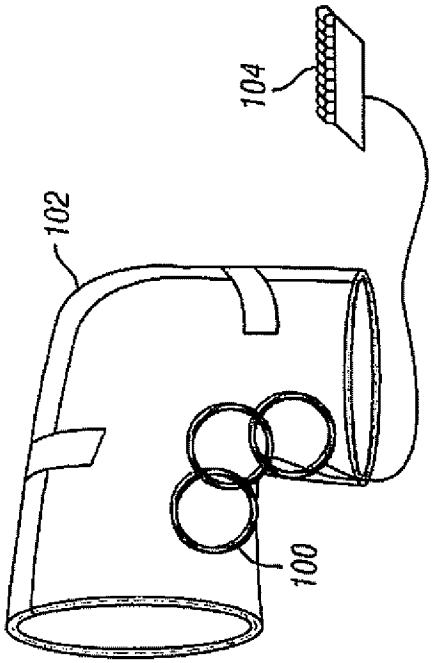

FIG. 9A

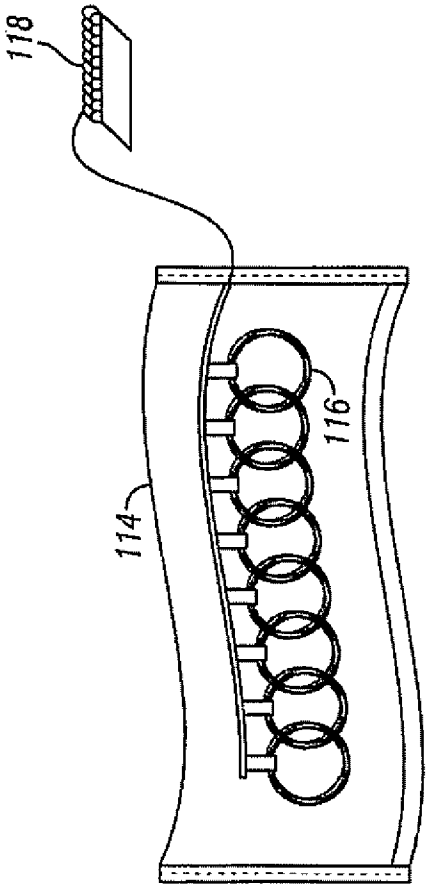

FIG. 9C

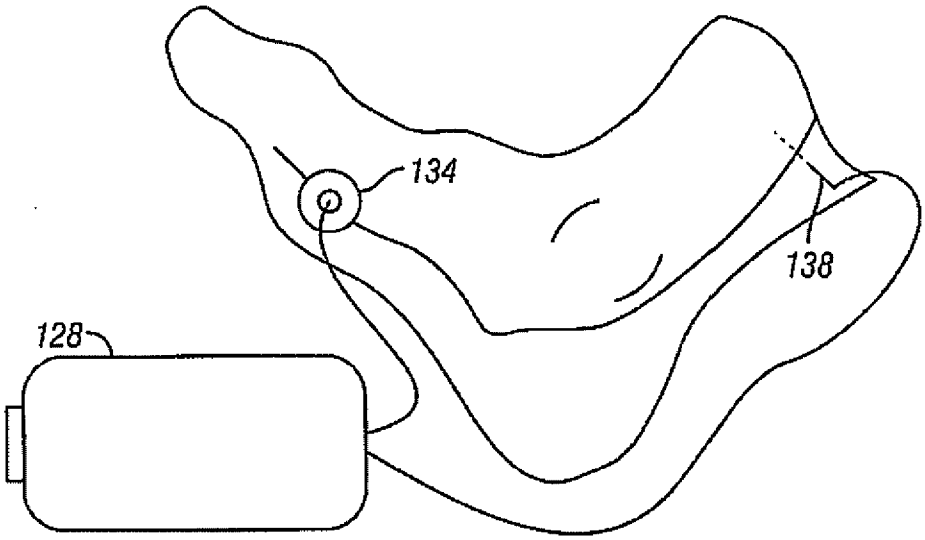

FIG. 10

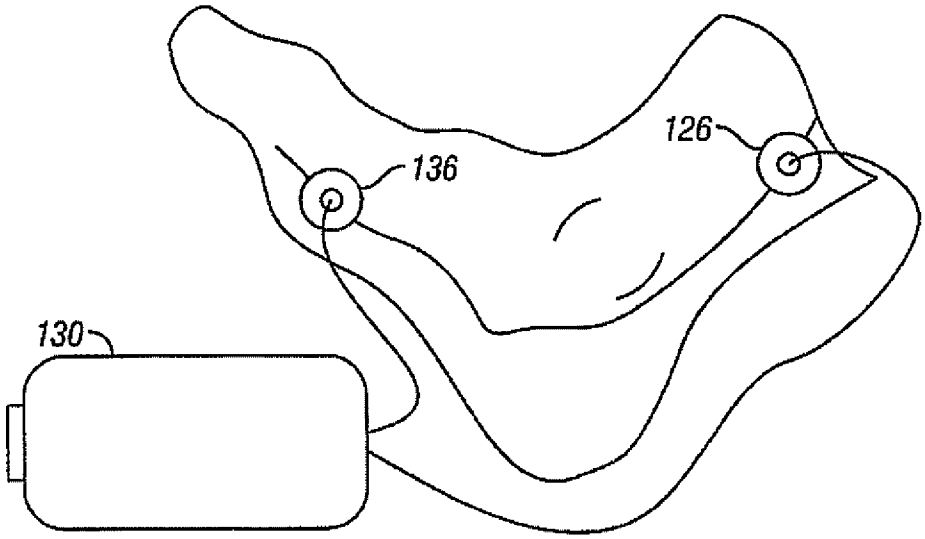

FIG. 11

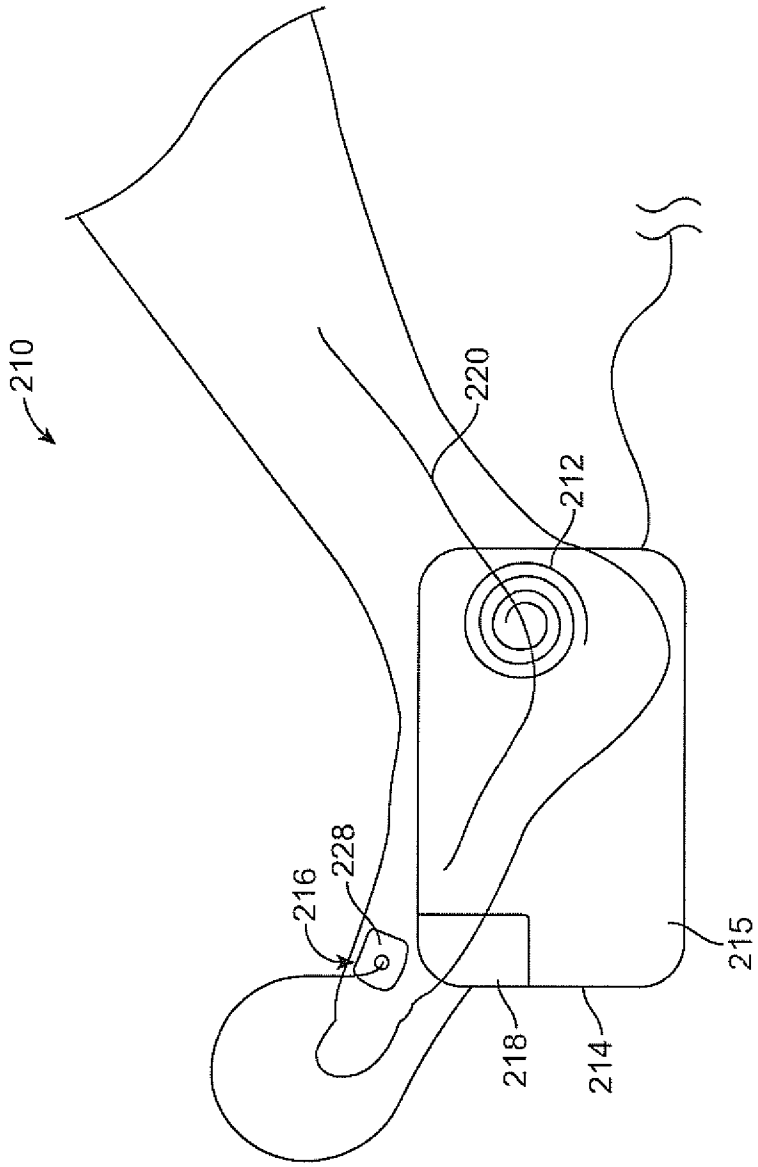

FIG. 12

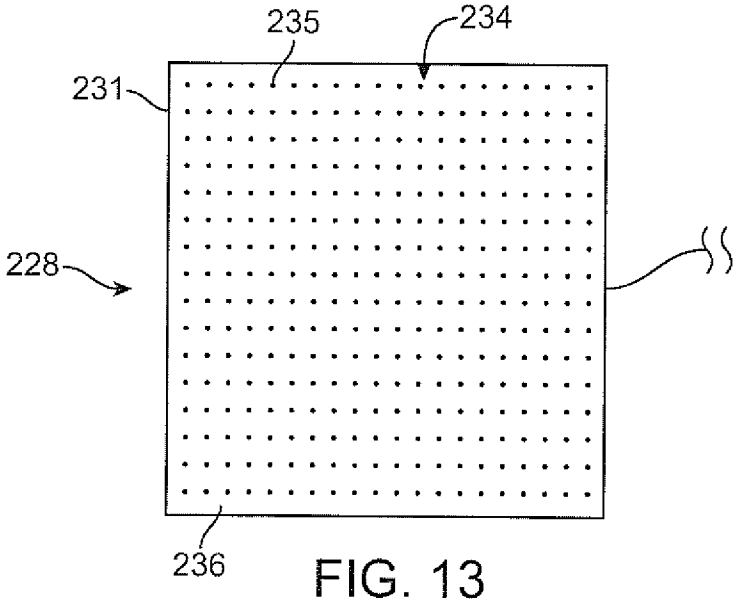

FIG. 13

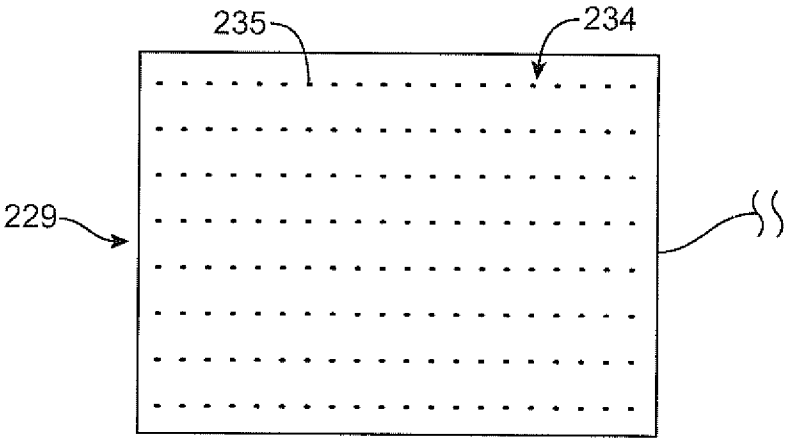

FIG. 14

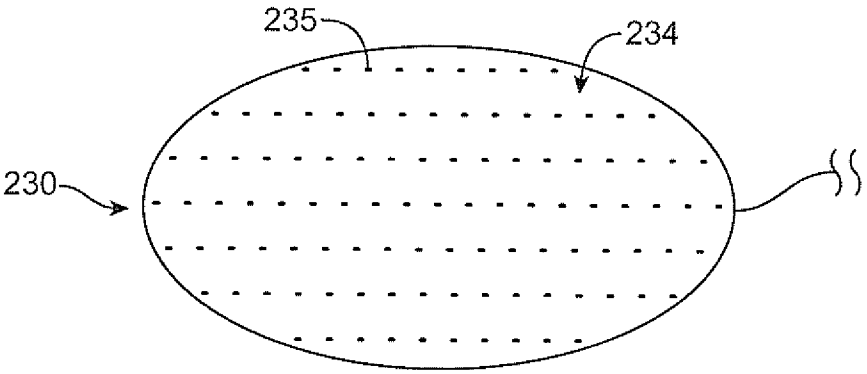

FIG. 15

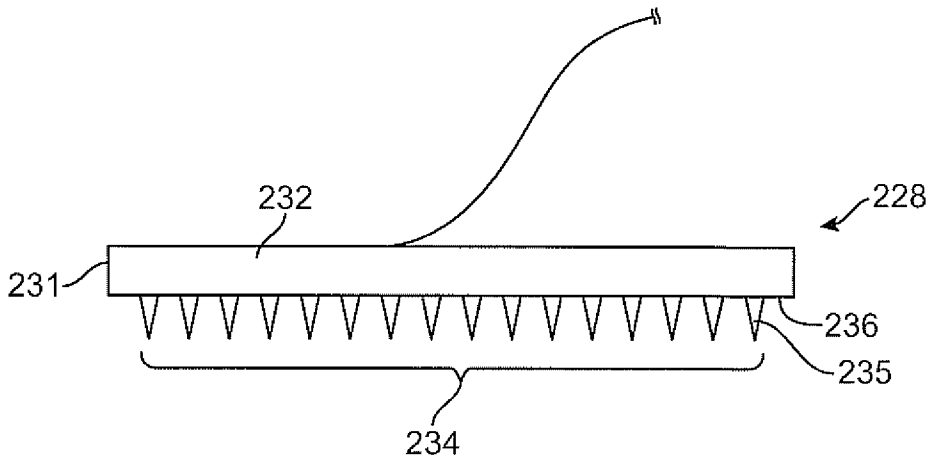

FIG. 16

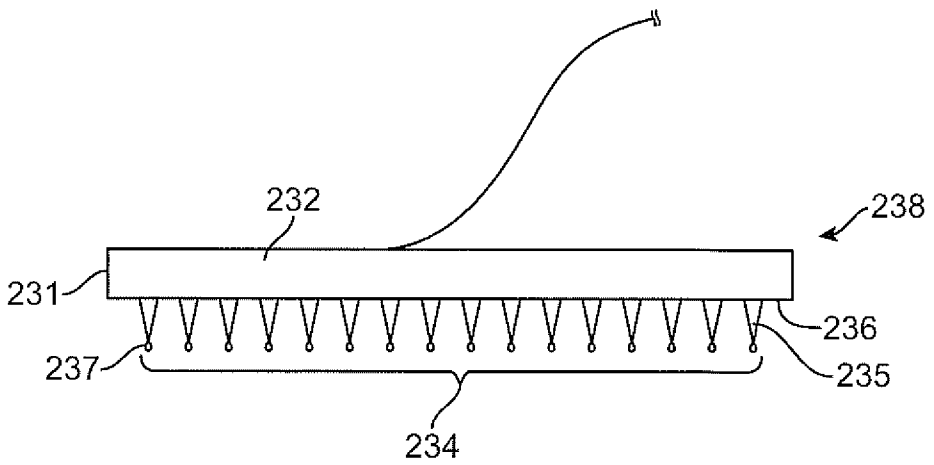

FIG. 17

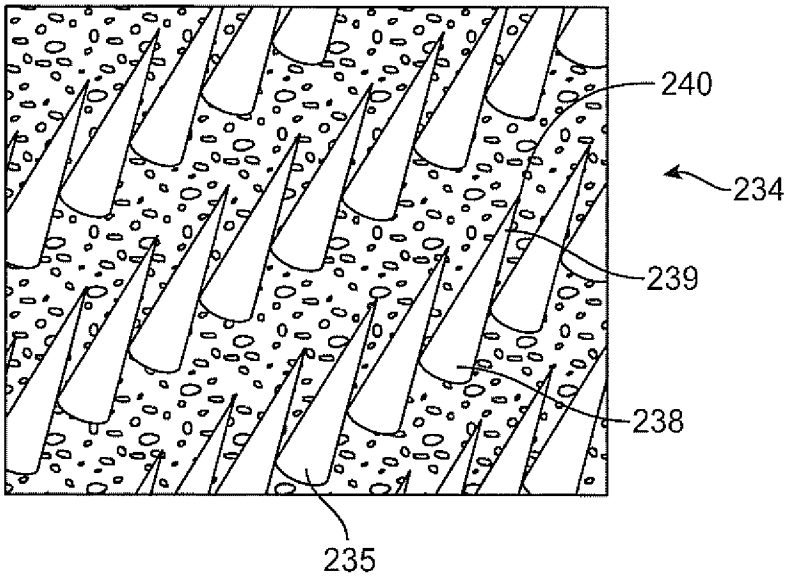

FIG. 18

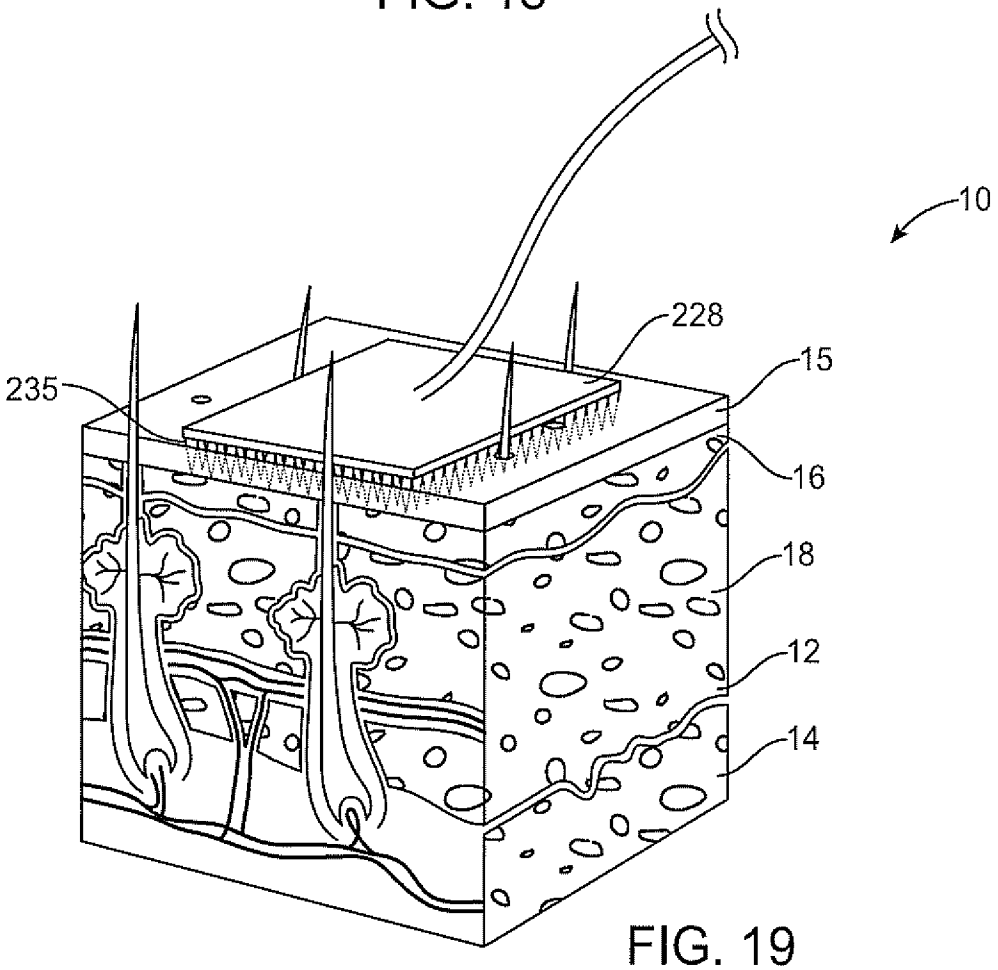

FIG. 19

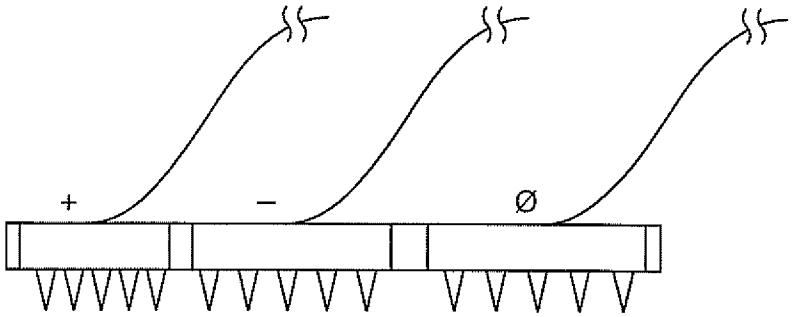

FIG. 20a

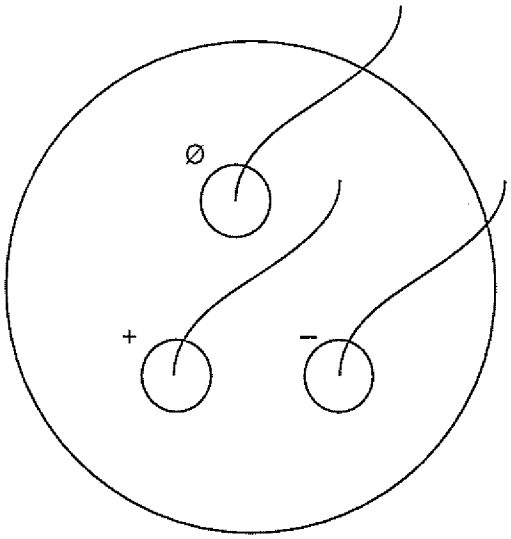

FIG. 20b

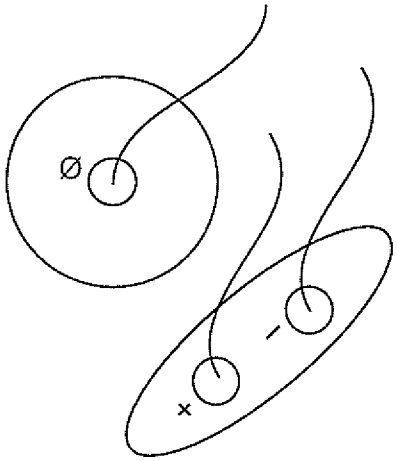

FIG. 20c

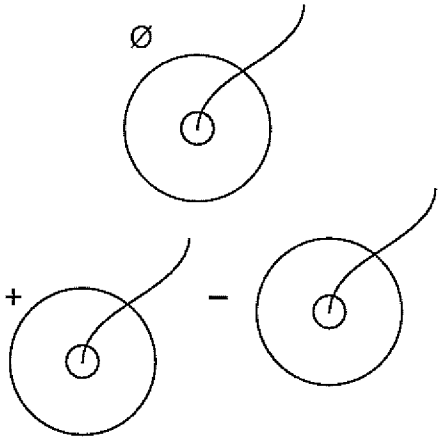

FIG. 20d

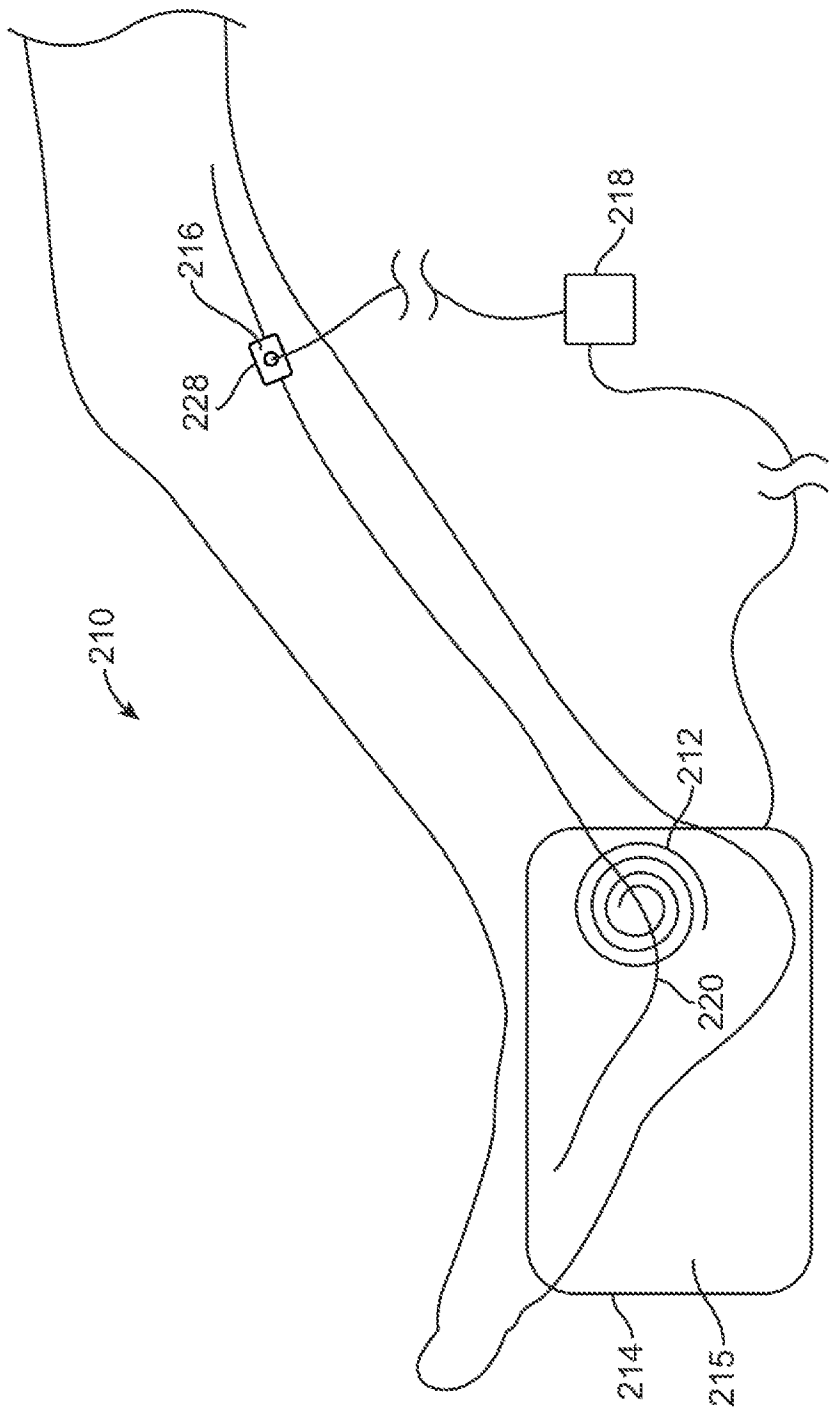

FIG. 21

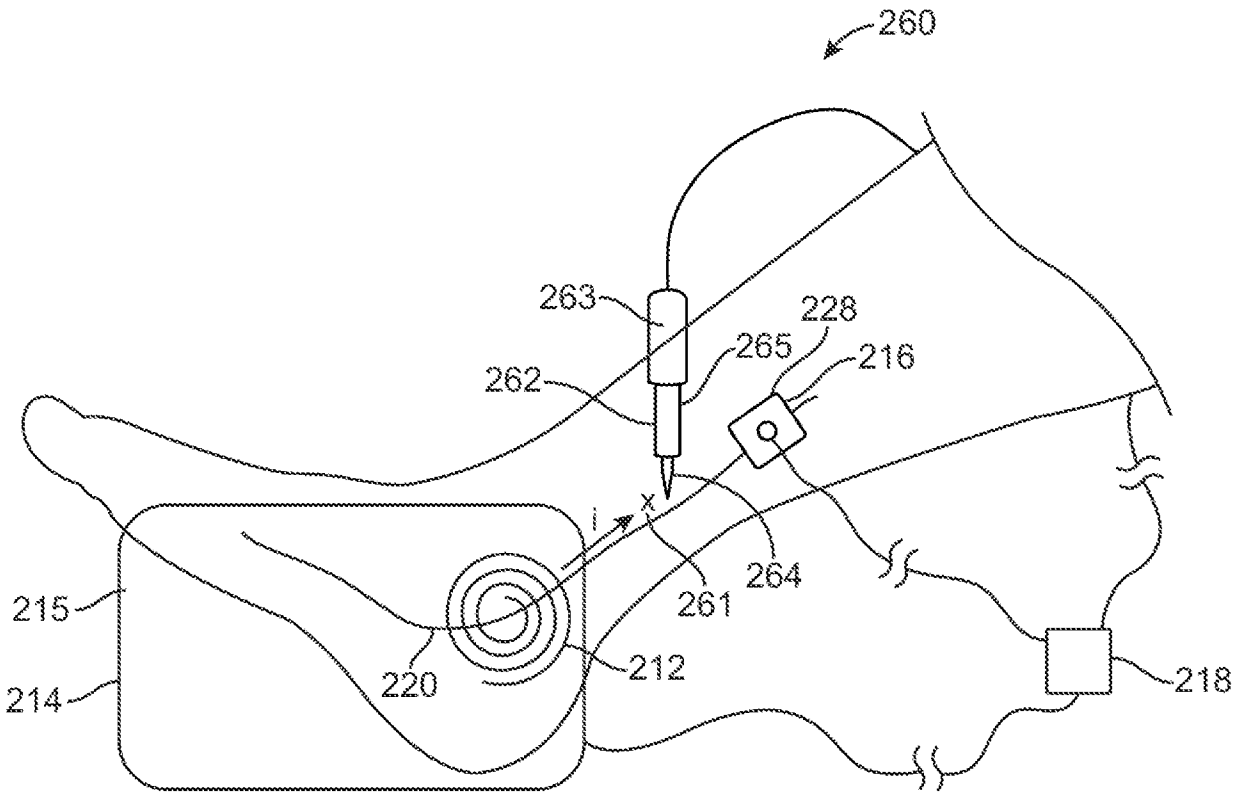

FIG. 22

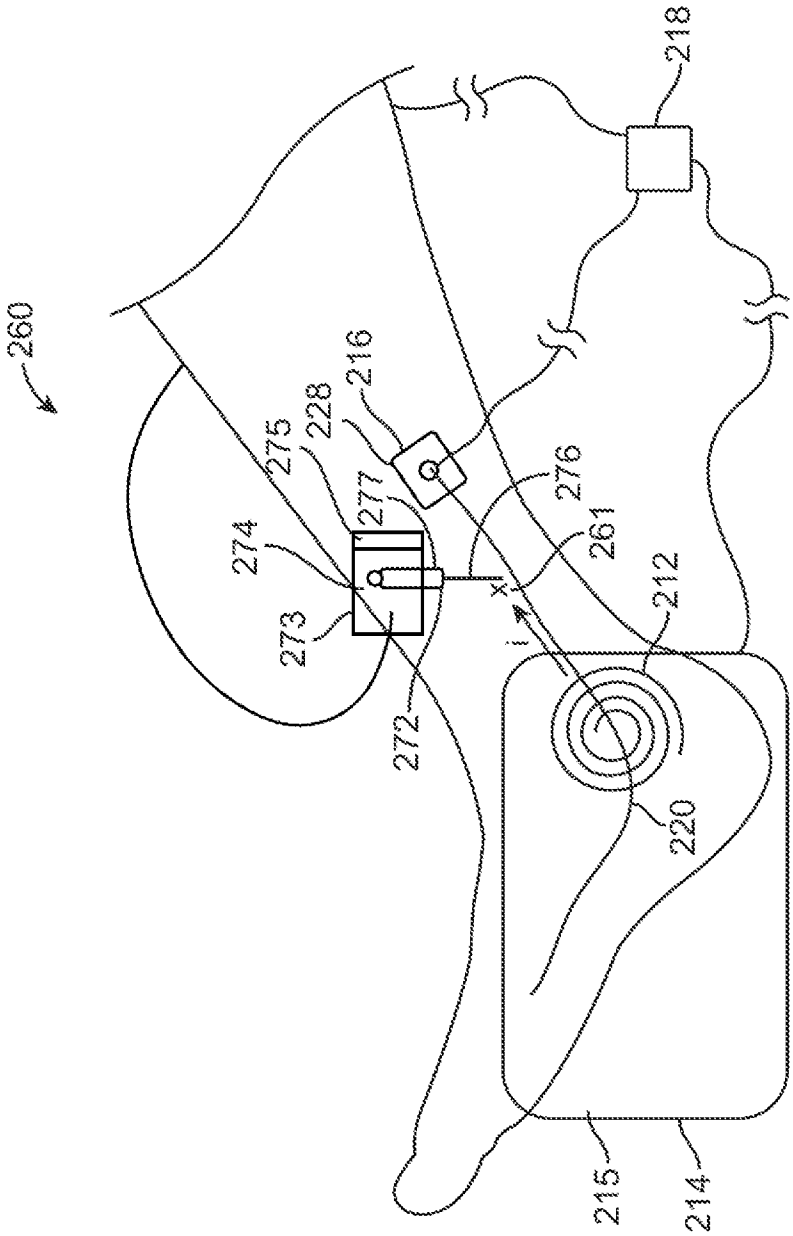

FIG. 23

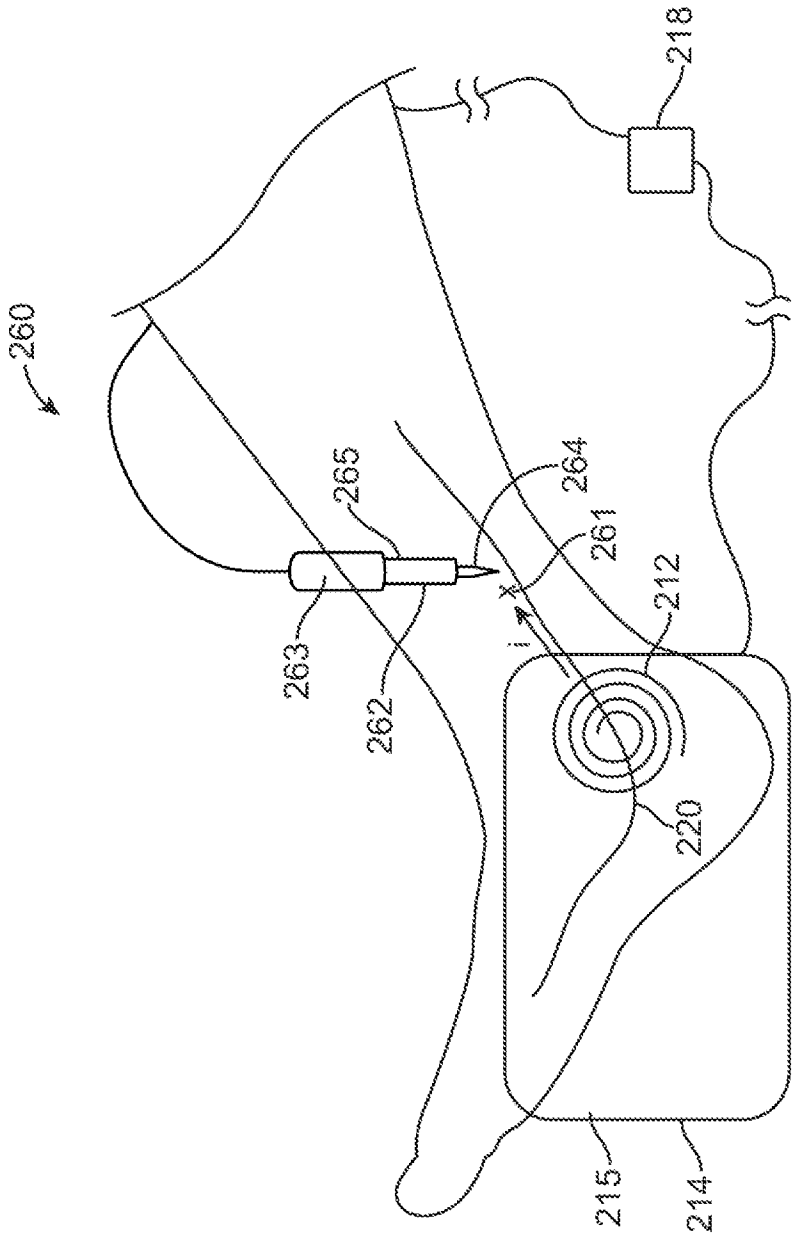

FIG. 24

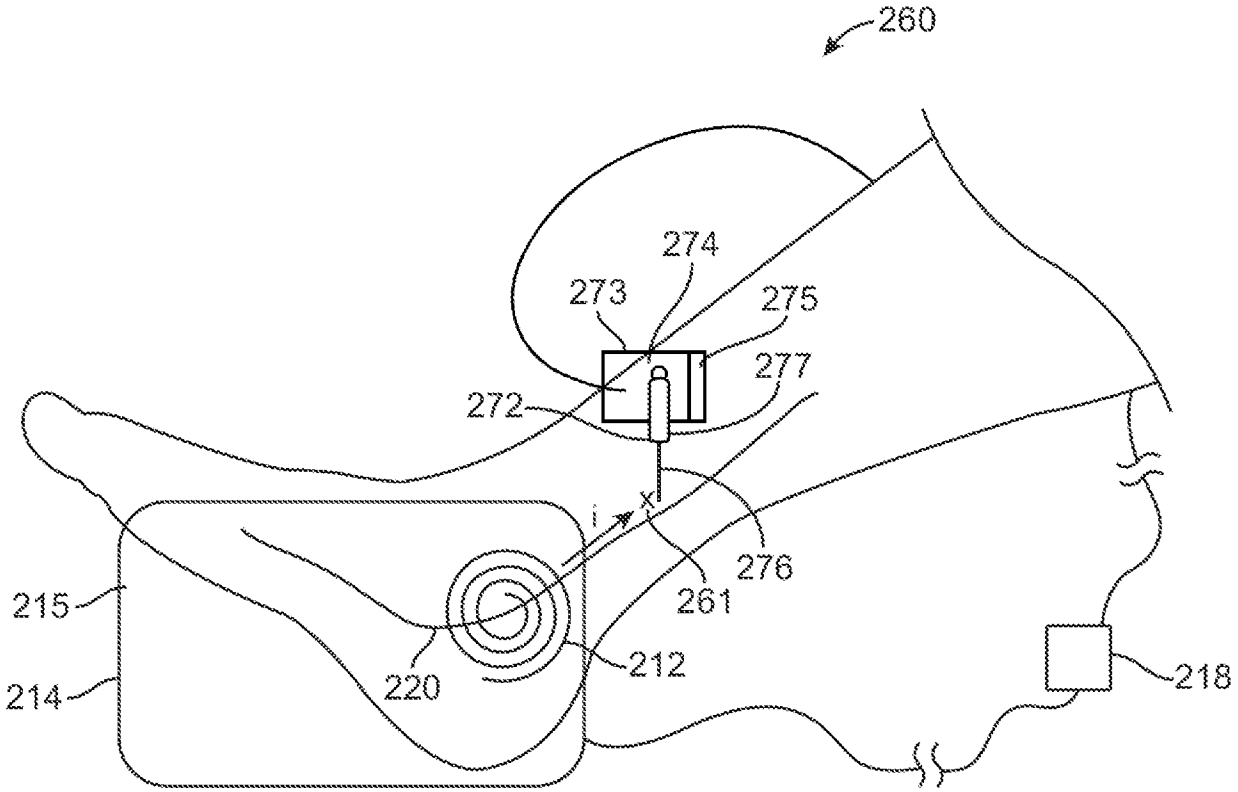

FIG. 25

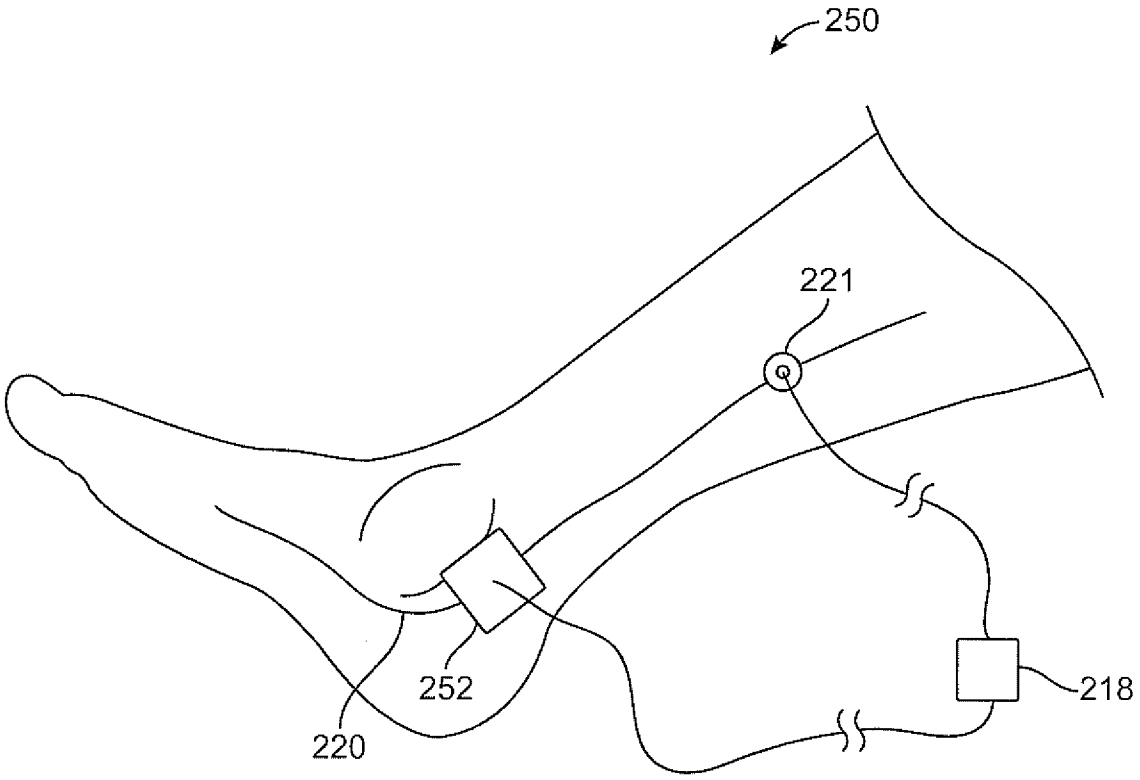

FIG. 26

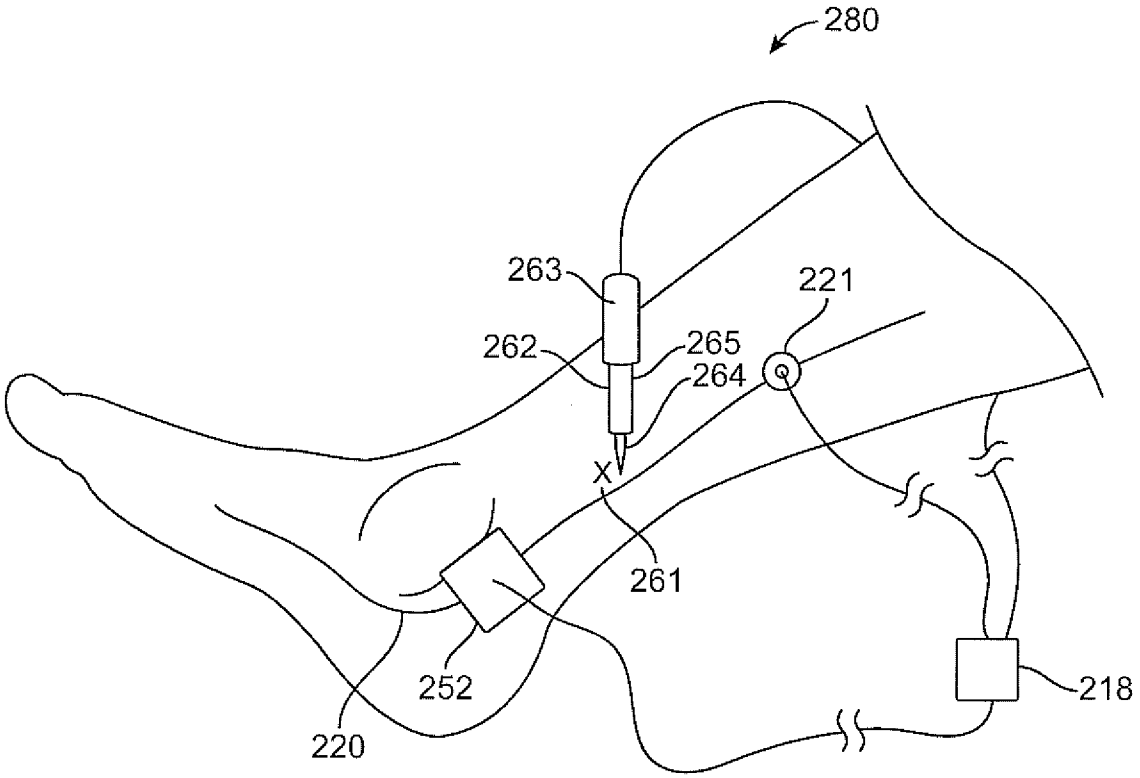

FIG. 27

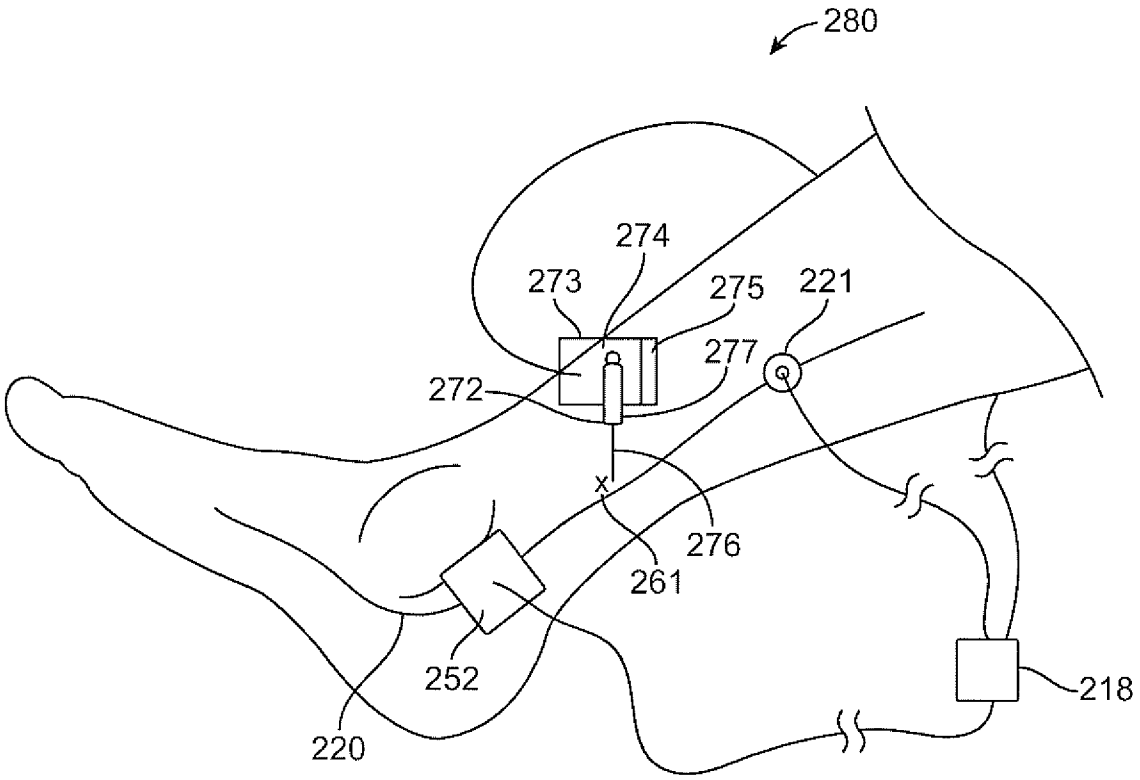

FIG. 28

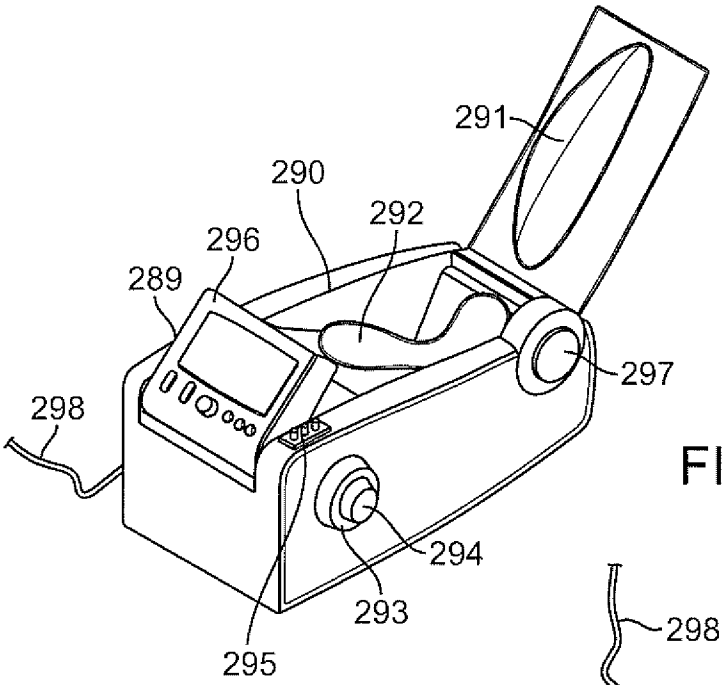

FIG. 29a

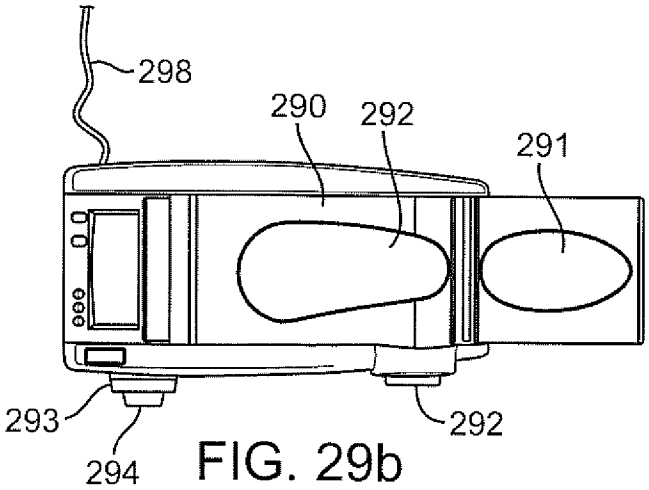

FIG. 29b

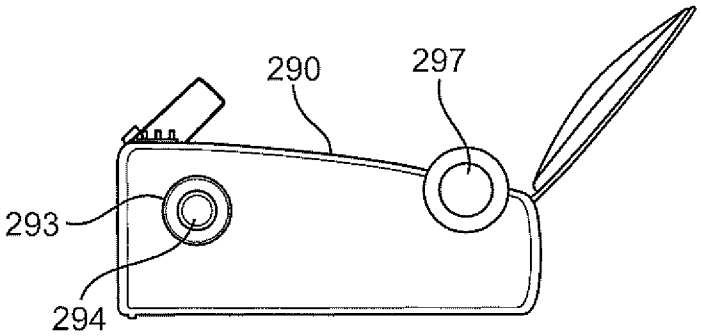

FIG. 29c

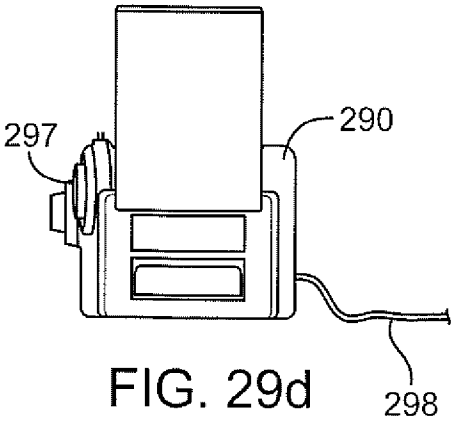

FIG. 29d

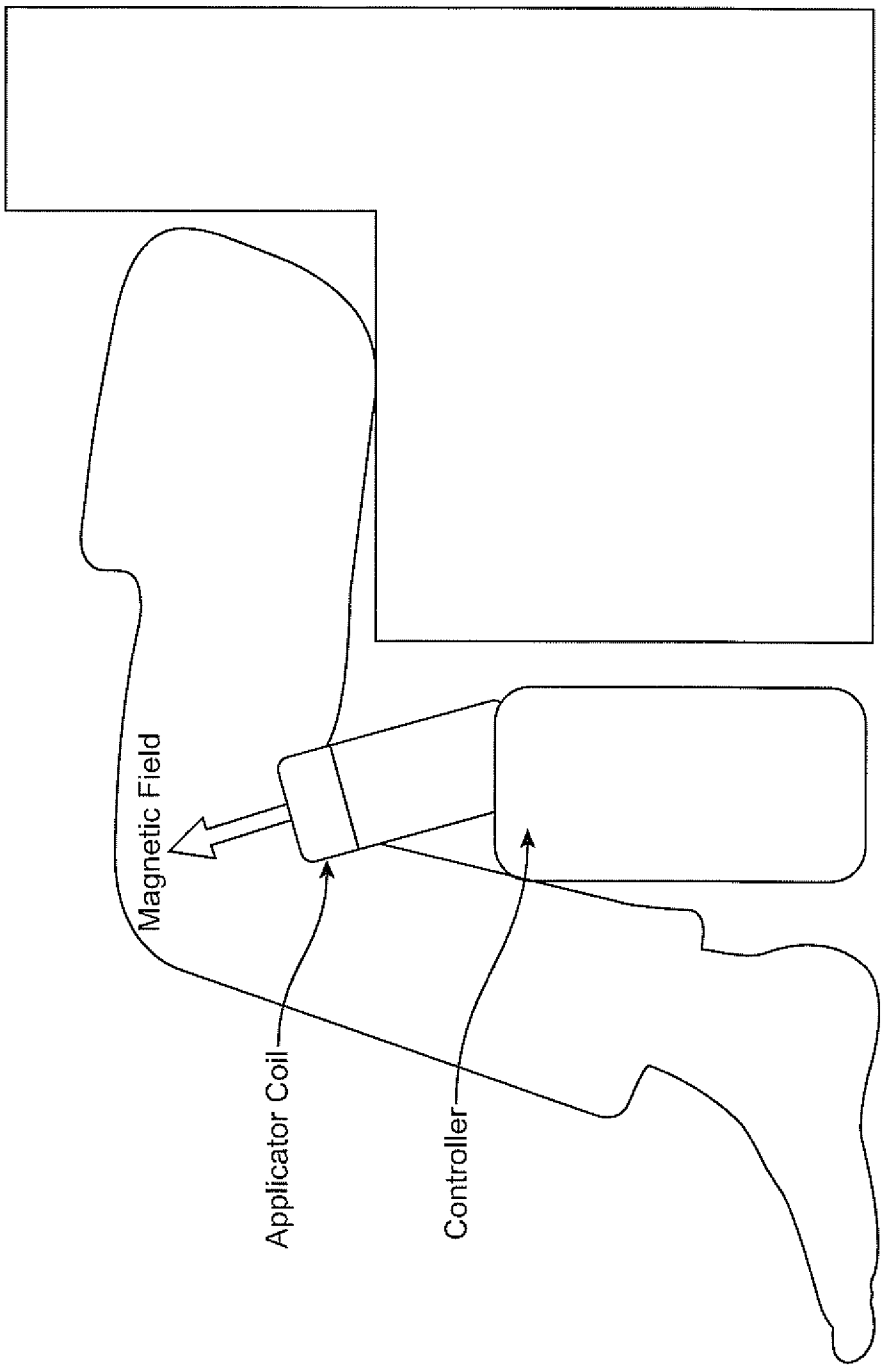

FIG. 30

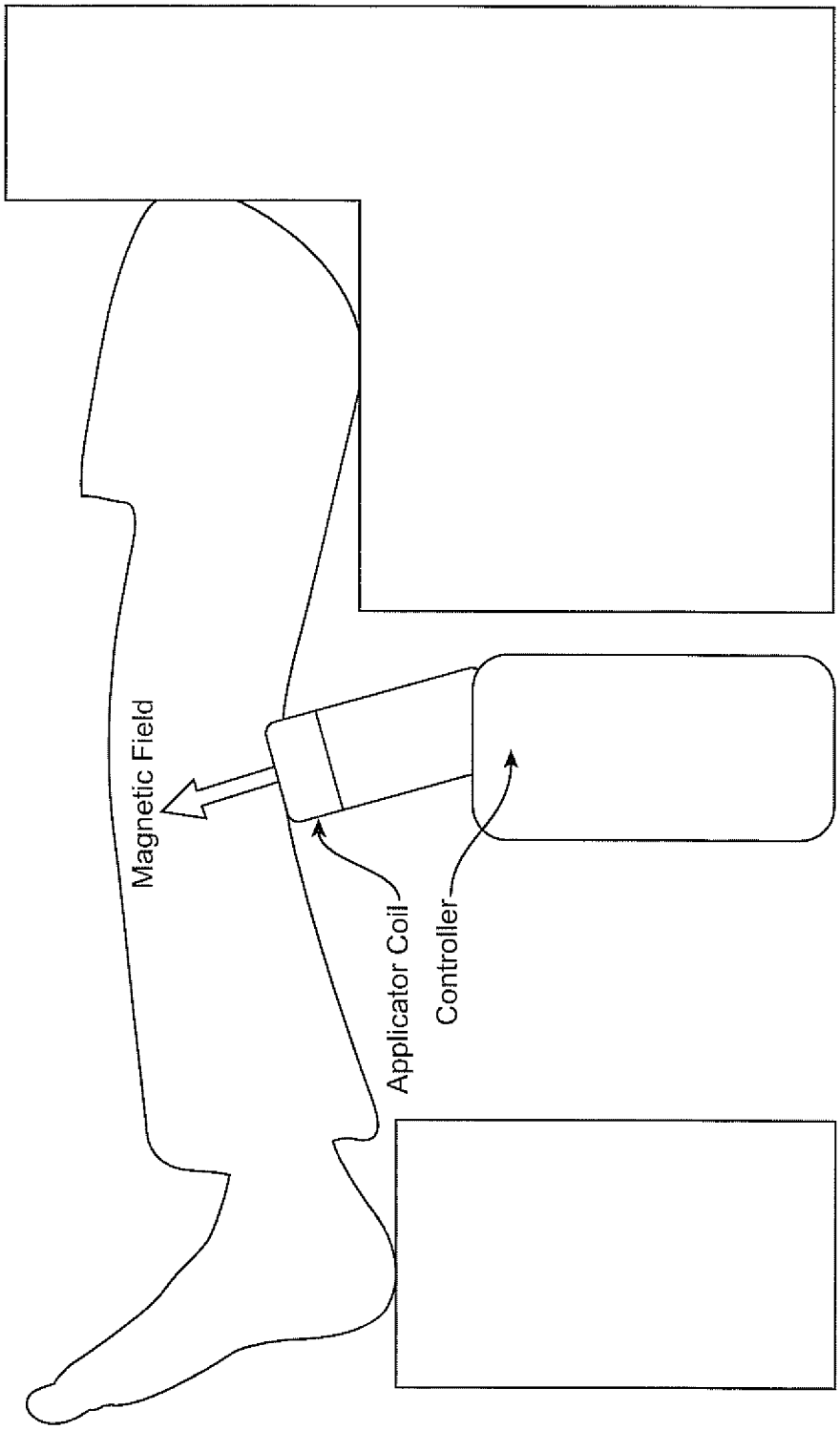

FIG. 31

PTO/SB/80 (01-06)
Approved for use through 12/31/2008. OMB 0651-0035
U.S. Patent and Trademark Office; U.S. DEPARTMENT OF COMMERCE
Under the Paperwork Reduction Act of 1995, no persons are required to respond to a collection of information unless it displays a valid OMB control number.

POWER OF ATTORNEY TO PROSECUTE APPLICATIONS BEFORE THE USPTO

I hereby revoke all previous powers of attorney given in the application identified in the attached statement under 37 CFR 3.73(b).

I hereby appoint:

☑ Practitioners associated with the Customer Number: 40518

OR

☐ Practitioner(s) named below (if more than ten patent practitioners are to be named, then a customer number must be used):

Name	Registration Number	Name	Registration Number

as attorney(s) or agent(s) to represent the undersigned before the United States Patent and Trademark Office (USPTO) in connection with any and all patent applications assigned only to the undersigned according to the USPTO assignment records or assignment documents attached to this form in accordance with 37 CFR 3.73(b).

Please change the correspondence address for the application identified in the attached statement under 37 CFR 3.73(b) to:

☑ The address associated with Customer Number: 40518

OR

☐ Firm or Individual Name			
Address			
City		State	Zip
Country			
Telephone		Email	

Assignee Name and Address:

EMKINETICS, INC.
49 Westdale Drive
Santa Cruz, CA 95060

A copy of this form, together with a statement under 37 CFR 3.73(b) (Form PTO/SB/96 or equivalent) is required to be filed in each application in which this form is used. The statement under 37 CFR 3.73(b) may be completed by one of the practitioners appointed in this form if the appointed practitioner is authorized to act on behalf of the assignee, and must identify the application in which this Power of Attorney is to be filed.

SIGNATURE of Assignee of Record

The individual whose signature and title is supplied below is authorized to act on behalf of the assignee

Signature		Date	11/6/8
Name	Christopher Hermanson	Telephone	415 690 7160
Title	CEO		

This collection of information is required by 37 CFR 1.31, 1.32 and 1.33. The information is required to obtain or retain a benefit by the public which is to file (and by the USPTO to process) an application. Confidentiality is governed by 35 U.S.C. 122 and 37 CFR 1.11 and 1.14. This collection is estimated to take 3 minutes to complete, including gathering, preparing, and submitting the completed application form to the USPTO. Time will vary depending upon the individual case. Any comments on the amount of time you require to complete this form and/or suggestions for reducing this burden, should be sent to the Chief Information Officer, U.S. Patent and Trademark Office, U.S. Department of Commerce, P.O. Box 1450, Alexandria, VA 22313-1450. DO NOT SEND FEES OR COMPLETED FORMS TO THIS ADDRESS. SEND TO: Commissioner for Patents, P.O. Box 1450, Alexandria, VA 22313-1450.

If you need assistance in completing the form, call 1-800-PTO-9199 and select option 2.

Docket No.: EMKNNZ00301

PTO/SB/96 (06-09)
Approved for use through 07/31/2009. OMB 0651-0031
U.S. Patent and Trademark Office; U.S. DEPARTMENT OF COMMERCE
Under the Paperwork Reduction Act of 1995, no persons are required to respond to a collection of information unless it displays a valid OMB control number.

STATEMENT UNDER 37 CFR 3.73(b)

Applicant/Patent Owner: Daniel Rogers BURNETT et al.

Application No./Patent No.: 12/508,529 Filed/Issue Date: July 12, 2009

Titled: METHOD AND APPARATUS FOR MAGNETIC INDUCTION THERAPY

EMKinetics, Inc., a corporation
(Name of Assignee) (Type of Assignee, e.g., corporation, partnership, university, government agency, etc.)

states that it is:

1. [X] the assignee of the entire right, title, and interest in;

2. [ ] an assignee of less than the entire right, title, and interest in
(The extent (by percentage) of its ownership interest is _____ %); or

3. [ ] the assignee of an undivided interest in the entirety of (a complete assignment from one of the joint inventors was made)

the patent application/patent identified above, by virtue of either:

A. [X] An assignment from the inventor(s) of the patent application/patent identified above. The assignment was recorded in the United States Patent and Trademark Office at Reel _____, Frame _____, or for which a copy therefore is attached.

OR

B. [ ] A chain of title from the inventor(s), of the patent application/patent identified above, to the current assignee as follows:

1. From: _____ To: _____
The document was recorded in the United States Patent and Trademark Office at
Reel _____, Frame _____, or for which a copy thereof is attached.

2. From: _____ To: _____
The document was recorded in the United States Patent and Trademark Office at
Reel _____, Frame _____, or for which a copy thereof is attached.

3. From: _____ To: _____
The document was recorded in the United States Patent and Trademark Office at
Reel _____, Frame _____, or for which a copy thereof is attached.

[ ] Additional documents in the chain of title are listed on a supplemental sheet(s).

[ ] As required by 37 CFR 3.73(b)(1)(i), the documentary evidence of the chain of title from the original owner to the assignee was, or concurrently is being, submitted for recordation pursuant to 37 CFR 3.11.

[NOTE: A separate copy (*i.e.*, a true copy of the original assignment document(s)) must be submitted to Assignment Division in accordance with 37 CFR Part 3, to record the assignment in the records of the USPTO. See MPEP 302.08]

The undersigned (whose title is supplied below) is authorized to act on behalf of the assignee.

Signature — March 12, 2010 (Date)

Steven M. Giovannetti (Printed or Typed Name) — Attorney of Record (Title)

This collection of information is required by 37 CFR 3.73(b). The information is required to obtain or retain a benefit by the public which is to file (and by the USPTO to process) an application. Confidentiality is governed by 35 U.S.C. 122 and 37 CFR 1.11 and 1.14. This collection is estimated to take 12 minutes to complete, including gathering, preparing, and submitting the completed application form to the USPTO. Time will vary depending upon the individual case. Any comments on the amount of time you require to complete this form and/or suggestions for reducing this burden, should be sent to the Chief Information Officer, U.S. Patent and Trademark Office, U.S. Department of Commerce, P.O. Box 1450, Alexandria, VA 22313-1450. DO NOT SEND FEES OR COMPLETED FORMS TO THIS ADDRESS. **SEND TO: Commissioner for Patents, P.O. Box 1450, Alexandria, VA 22313-1450.**

If you need assistance in completing the form, call 1-800-PTO-9199 and select option 2.

ASSIGNMENT
JOINT

THIS ASSIGNMENT, by Daniel Rogers BURNETT and Christopher HERMANSON (hereinafter referred to as the assignor), residing at 588 Teresita Boulevard, San Francisco, CA 94127, USA and 85 Westdale Drive, Santa Cruz, CA 95060, USA, respectively, witnesseth:

WHEREAS, said assignors have invented certain new and useful improvements set forth in an application for Letters Patent of the United States entitled METHOD AND APPARATUS FOR MAGNETIC INDUCTION THERAPY bearing Application No. 12/508,529, filed July 23, 2009; and

WHEREAS, EMKINETICS, INC., a corporation duly organized under and pursuant to the laws of Delaware and having its principal place of business at 49 Westdale Drive, Santa Cruz, CA 95060, USA, (hereinafter referred to as the assignee) is desirous of acquiring the entire right, title and interest in and to said inventions and said application for Letters Patent of the United States, and in and to any Letters Patent or Patents, United States or foreign, to be obtained therefore and thereon:

NOW, THEREFORE, for good and sufficient consideration, receipt of which is hereby acknowledged by assignors, said assignors have sold, assigned, transferred and set over, and by these presents do sell, assign, transfer and set over, unto said assignee, its successors, legal representatives and assigns, the entire right, title and interest in and to the above-mentioned inventions, application for Letters Patent, and any and all Letters Patent or Patents in the United States of America and all foreign countries which may be granted therefore and thereon, and in and to any and all divisions, continuations and continuations-in-part of said application, or reissues or extensions of said Letters Patent or Patents, and all rights under the International Convention for the Protection of Industrial Property, the same to be held and enjoyed by said assignee, for its own use and the use of its successors, legal representatives and assigns, to the full end of the term or terms for which Letters Patent or Patents may be granted, as fully and entirely as the same would have been held and enjoyed by the assignors, had this sale and assignment not been made.

AND for the same consideration, said assignors hereby covenant and agree to and with said assignee its successors, legal representatives and assigns, that, at the time of execution and delivery of these presents, said assignors are the sole and lawful owners of the entire right, title and interest in and to said inventions and the application for Letters Patent above-mentioned, and that the same are unencumbered and that said assignors have good and full right and lawful authority to sell and convey the same in the manner herein set forth.

AND for the same consideration, said assignors hereby covenant and agree to and with said assignee, its successors, legal representatives and assigns, that said assignors will, whenever counsel of said assignee, or the counsel of its successors, legal representatives and assigns, shall advise that any proceeding in connection with said inventions, or said application for Letters Patent, or any proceeding in connection with Letters Patent for said inventions in any country, including interference proceedings, is lawful and desirable, or that any division, continuation or continuation-in-part of any application for Letters Patent or any reissue or extension of any Letters Patent, to be obtained thereon, is lawful and desirable, sign all papers and documents,

take all lawful oaths, and do all acts necessary or required to be done for the procurement, maintenance, enforcement and defense of Letters Patent for said inventions, without charge to said assignee, its successors, legal representatives and assigns, but at the cost and expense of said assignee, its successors, legal representatives and assigns. Such cost and expense shall include, but is not limited to, lost normal compensation of the respective assignor.

AND said assignors hereby request the Commissioner of Patents to issue said Letters Patent of the United States to said assignee as the assignee of said inventions and the Letters Patent to be issued thereon for the sole use of said assignee, its successors, legal representatives and assigns.

11/17/09
Date

Daniel Rogers BURNETT

11/17/09
Date

Christopher HERMANSON

PTO/SB/22 (07-09)
Approved for use through 07/31/2012. OMB 0651-0031
U.S. Patent and Trademark Office; U.S. DEPARMENT OF COMMERCE
Under the paperwork Reduction Act of 1995, no persons are required to respond to a collection of information unless it displays a valid OMB control number.

PETITION FOR EXTENSION OF TIME UNDER 37 CFR 1.136(a) **FY 2009** *(Fees pursuant to the Consolidated Appropriations Act, 2005 (H.R. 4818).)*	Docket Number (Optional) EMKNZ00301
Application Number 12/508,529	Filed July 23, 2009
For METHOD AND APPARATUS FOR MAGNETIC INDUCTION THERAPY	
Art Unit 3766	Examiner Not Yet Assigned

This is a request under the provisions of 37 CFR 1.136(a) to extend the period for filing a reply in the above identified application.

The requested extension and fee are as follows (check time period desired and enter the appropriate fee below):

		Fee	Small Entity Fee	
☐	One month (37 CFR 1.17(a)(1))	$130	$65	$
☐	Two months (37 CFR 1.17(a)(2))	$490	$245	$
☐	Three months (37 CFR 1.17(a)(3))	$1110	$555	$
☐	Four months (37 CFR 1.17(a)(4))	$1730	$865	$
☑	Five months (37 CFR 1.17(a)(5))	$2350	$1175	$ 1175

☑ Applicant claims small entity status. See 37 CFR 1.27.

☐ A check in the amount of the fee is enclosed.

☑ Payment by credit card. ~~Form PTO-2038 is attached.~~

☐ The Director has already been authorized to charge fees in this application to a Deposit Account.

☑ The Director is hereby authorized to charge any fees which may be required, or credit any overpayment, to Deposit Account Number 50-3973.

WARNING: Information on this form may become public. Credit card information should not be included on this form. Provide credit card information and authorization on PTO-2038.

I am the

☐ applicant/inventor.

☐ assignee of record of the entire interest. See 37 CFR 3.71.
Statement under 37 CFR 3.73(b) is enclosed (Form PTO/SB/96).

☑ attorney or agent of record. Registration Number 51,739

☐ attorney or agent under 37 CFR 1.34.
Registration number if acting under 37 CFR 1.34 _____

Signature	March 12, 2010 Date
Steven M. Giovannetti Typed or printed name	(650) 646-2570 Telephone Number

NOTE: Signatures of all the inventors or assignees of record of the entire interest or their representative(s) are required. Submit multiple forms if more than one signature is required, see below.

☑ Total of 1 forms are submitted.

This collection of information is required by 37 CFR 1.136(a). The information is required to obtain or retain a benefit by the public which is to file (and by the USPTO to process) an application. Confidentiality is governed by 35 U.S.C. 122 and 37 CFR 1.11 and 1.14. This collection is estimated to take 6 minutes to complete, including gathering, preparing, and submitting the completed application form to the USPTO. Time will vary depending upon the individual case. Any comments on the amount of time you require to complete this form and/or suggestions for reducing this burden, should be sent to the Chief Information Officer, U.S. Patent and Trademark Office, U.S. Department of Commerce, P.O. Box 1450, Alexandria, VA 22313-1450. DO NOT SEND FEES OR COMPLETED FORMS TO THIS ADDRESS. **SEND TO: Commissioner for Patents, P.O. Box 1450, Alexandria, VA 22313-1450.**

If you need assistance in completing the form, call 1-800-PTO-9199 and select option 2.

Electronic Patent Application Fee Transmittal

Application Number:	12508529
Filing Date:	23-Jul-2009
Title of Invention:	METHOD AND APPARATUS FOR MAGNETIC INDUCTION THERAPY
First Named Inventor/Applicant Name:	Daniel Rogers Burnett
Filer:	Steven Michael Giovannetti/Kym Moore
Attorney Docket Number:	EMKNNZ00301

Filed as Small Entity

Utility under 35 USC 111(a) Filing Fees

Description	Fee Code	Quantity	Amount	Sub-Total in USD($)
Basic Filing:				
Pages:				
Claims:				
Miscellaneous-Filing:				
Late filing fee for oath or declaration	2051	1	65	65
Petition:				
Patent-Appeals-and-Interference:				
Post-Allowance-and-Post-Issuance:				
Extension-of-Time:				

Description	Fee Code	Quantity	Amount	Sub-Total in USD($)
Extension - 5 months with $0 paid	2255	1	1175	1175
Miscellaneous:				
			Total in USD ($)	**1240**

Electronic Acknowledgement Receipt

EFS ID:	7203372
Application Number:	12508529
International Application Number:	
Confirmation Number:	8186
Title of Invention:	METHOD AND APPARATUS FOR MAGNETIC INDUCTION THERAPY
First Named Inventor/Applicant Name:	Daniel Rogers Burnett
Customer Number:	40518
Filer:	Steven Michael Giovannetti/Kym Moore
Filer Authorized By:	Steven Michael Giovannetti
Attorney Docket Number:	EMKNNZ00301
Receipt Date:	12-MAR-2010
Filing Date:	23-JUL-2009
Time Stamp:	18:09:09
Application Type:	Utility under 35 USC 111(a)

Payment information:

Submitted with Payment	yes
Payment Type	Credit Card
Payment was successfully received in RAM	$1240
RAM confirmation Number	4909
Deposit Account	
Authorized User	

File Listing:

Document Number	Document Description	File Name	File Size(Bytes)/ Message Digest	Multi Part /.zip	Pages (if appl.)

1	Applicant Response to Pre-Exam Formalities Notice	EMKNNZ00301_20100312_response_to_missing_parts.pdf	125582 57fb9b4955bb6bbb330ea111d8139200d4cb80e4	no	2
Warnings:					
Information:					
2	Application Data Sheet	EMKNNZ00301_20100312_supplemental_ads_efs.pdf	967449 f7f8cbe9863e6baf9e33a82112bbf1d1e8571401	no	5
Warnings:					
Information:					
3	Oath or Declaration filed	EMKNNZ00301_20100312_declaration.pdf	153356 7144fa6a8c02b8d4ea2c2c37de8c77bb9711413a	no	1
Warnings:					
Information:					
4	Drawings-only black and white line drawings	EMKNNZ00301_20100312_replacement_drawings.pdf	819896 92ce7a7fc125eac34d8f7d9aa846930848666914	no	24
Warnings:					
Information:					
5		EMKNNZ00301_20100312_power_of_attorney.pdf	455333 3f79c271c62ba0baac2cd640ad62c98d42630cf1	yes	4
	Multipart Description/PDF files in .zip description				
	Document Description		**Start**	**End**	
	Power of Attorney		1	1	
	Assignee showing of ownership per 37 CFR 3.73(b).		2	4	
Warnings:					
Information:					
6	Extension of Time	EMKNNZ00301_20100312_extension_of_time.pdf	124145 7dba7ac0fa5f517e9f31758b001b8f54b968100b	no	1
Warnings:					
Information:					
7	Fee Worksheet (PTO-875)	fee-info.pdf	32526 8f1aeeddb6717ab51ce812613e91b35853b00366	no	2
Warnings:					
Information:					
		Total Files Size (in bytes):	2678287		

This Acknowledgement Receipt evidences receipt on the noted date by the USPTO of the indicated documents, characterized by the applicant, and including page counts, where applicable. It serves as evidence of receipt similar to a Post Card, as described in MPEP 503.

New Applications Under 35 U.S.C. 111
If a new application is being filed and the application includes the necessary components for a filing date (see 37 CFR 1.53(b)-(d) and MPEP 506), a Filing Receipt (37 CFR 1.54) will be issued in due course and the date shown on this Acknowledgement Receipt will establish the filing date of the application.

National Stage of an International Application under 35 U.S.C. 371
If a timely submission to enter the national stage of an international application is compliant with the conditions of 35 U.S.C. 371 and other applicable requirements a Form PCT/DO/EO/903 indicating acceptance of the application as a national stage submission under 35 U.S.C. 371 will be issued in addition to the Filing Receipt, in due course.

New International Application Filed with the USPTO as a Receiving Office
If a new international application is being filed and the international application includes the necessary components for an international filing date (see PCT Article 11 and MPEP 1810), a Notification of the International Application Number and of the International Filing Date (Form PCT/RO/105) will be issued in due course, subject to prescriptions concerning national security, and the date shown on this Acknowledgement Receipt will establish the international filing date of the application.

UNITED STATES PATENT AND TRADEMARK OFFICE

UNITED STATES DEPARTMENT OF COMMERCE
United States Patent and Trademark Office
Address: COMMISSIONER FOR PATENTS
P.O. Box 1450
Alexandria, Virginia 22313-1450
www.uspto.gov

APPLICATION NUMBER	FILING OR 371(C) DATE	FIRST NAMED APPLICANT	ATTY. DOCKET NO./TITLE
12/508,529	07/23/2009	Daniel Rogers Burnett	EMKNNZ00301

CONFIRMATION NO. 8186

FORMALITIES LETTER

40518
LEVINE BAGADE HAN LLP
2400 GENG ROAD, SUITE 120
PALO ALTO, CA 94303

OC000000037230354

Date Mailed: 08/12/2009

NOTICE TO FILE MISSING PARTS OF NONPROVISIONAL APPLICATION

FILED UNDER 37 CFR 1.53(b)

Filing Date Granted

Items Required To Avoid Abandonment:

An application number and filing date have been accorded to this application. The item(s) indicated below, however, are missing. Applicant is given **TWO MONTHS** from the date of this Notice within which to file all required items and pay any fees required below to avoid abandonment. Extensions of time may be obtained by filing a petition accompanied by the extension fee under the provisions of 37 CFR 1.136(a).

- The oath or declaration is missing.
  A properly signed oath or declaration in compliance with 37 CFR 1.63, identifying the application by the above Application Number and Filing Date, is required.
  Note: If a petition under 37 CFR 1.47 is being filed, an oath or declaration in compliance with 37 CFR 1.63 signed by all available joint inventors, or if no inventor is available by a party with sufficient proprietary interest, is required.

The application is informal since it does not comply with the regulations for the reason(s) indicated below.

The required item(s) identified below must be timely submitted to avoid abandonment:

- Replacement drawings in compliance with 37 CFR 1.84 and 37 CFR 1.121(d) are required. The drawings submitted are not acceptable because:
  - The drawings have a line quality that is too light to be reproduced (weight of all lines and letters must be heavy enough to permit adequate reproduction) or text that is illegible (reference characters, sheet numbers, and view numbers must be plain and legible) see 37 CFR 1.84(l) and (p)(1)); See Figure(s) 19.
  - The drawings submitted to the Office are not electronically reproducible because portions of figures 14, 17, 21-25, 29a - 29d are missing and/or blurry.

Applicant is cautioned that correction of the above items may cause the specification and drawings page count to exceed 100 pages. If the specification and drawings exceed 100 pages, applicant will need to submit the required application size fee.

The applicant needs to satisfy supplemental fees problems indicated below.

The required item(s) identified below must be timely submitted to avoid abandonment:

- To avoid abandonment, a surcharge (for late submission of filing fee, search fee, examination fee or oath or declaration) as set forth in 37 CFR 1.16(f) of $**65** for a small entity in compliance with 37 CFR 1.27, must be submitted with the missing items identified in this notice.

SUMMARY OF FEES DUE:

Total additional fee(s) required for this application is $**65** for a small entity
- $**65** Surcharge.

Replies should be mailed to:

Mail Stop Missing Parts
Commissioner for Patents
P.O. Box 1450
Alexandria VA 22313-1450

Registered users of EFS-Web may alternatively submit their reply to this notice via EFS-Web.
https://sportal.uspto.gov/authenticate/AuthenticateUserLocalEPF.html

For more information about EFS-Web please call the USPTO Electronic Business Center at **1-866-217-9197** or visit our website at http://www.uspto.gov/ebc.

If you are not using EFS-Web to submit your reply, you must include a copy of this notice.

/atesfaye/

Office of Data Management, Application Assistance Unit (571) 272-4000, or (571) 272-4200, or 1-888-786-0101

UNITED STATES PATENT AND TRADEMARK OFFICE

UNITED STATES DEPARTMENT OF COMMERCE
United States Patent and Trademark Office
Address: COMMISSIONER FOR PATENTS
P.O. Box 1450
Alexandria, Virginia 22313-1450
www.uspto.gov

APPLICATION NUMBER	FILING or 371(c) DATE	GRP ART UNIT	FIL FEE REC'D	ATTY.DOCKET.NO	TOT CLAIMS	IND CLAIMS
12/508,529	07/23/2009	3766	1786	EMKNNZ00301	54	7

CONFIRMATION NO. 8186

40518
LEVINE BAGADE HAN LLP
2400 GENG ROAD, SUITE 120
PALO ALTO, CA 94303

FILING RECEIPT

OC000000037230353

Date Mailed: 08/12/2009

Receipt is acknowledged of this non-provisional patent application. The application will be taken up for examination in due course. Applicant will be notified as to the results of the examination. Any correspondence concerning the application must include the following identification information: the U.S. APPLICATION NUMBER, FILING DATE, NAME OF APPLICANT, and TITLE OF INVENTION. Fees transmitted by check or draft are subject to collection. Please verify the accuracy of the data presented on this receipt. **If an error is noted on this Filing Receipt, please submit a written request for a Filing Receipt Correction. Please provide a copy of this Filing Receipt with the changes noted thereon. If you received a "Notice to File Missing Parts" for this application, please submit any corrections to this Filing Receipt with your reply to the Notice. When the USPTO processes the reply to the Notice, the USPTO will generate another Filing Receipt incorporating the requested corrections**

Applicant(s)

Daniel Rogers Burnett, San Francisco, CA;
Christopher Hermanson, Santa Cruz, CA;

Power of Attorney: None

Domestic Priority data as claimed by applicant

This application is a CIP of 11/866,329 10/02/2007
which claims benefit of 60/848,720 10/02/2006

Foreign Applications

If Required, Foreign Filing License Granted: 08/04/2009

The country code and number of your priority application, to be used for filing abroad under the Paris Convention, is **US 12/508,529**

Projected Publication Date: To Be Determined - pending completion of Missing Parts

Non-Publication Request: No

Early Publication Request: No
**** SMALL ENTITY ****

Title

METHOD AND APPARATUS FOR MAGNETIC INDUCTION THERAPY

Preliminary Class

607

PROTECTING YOUR INVENTION OUTSIDE THE UNITED STATES

Since the rights granted by a U.S. patent extend only throughout the territory of the United States and have no effect in a foreign country, an inventor who wishes patent protection in another country must apply for a patent in a specific country or in regional patent offices. Applicants may wish to consider the filing of an international application under the Patent Cooperation Treaty (PCT). An international (PCT) application generally has the same effect as a regular national patent application in each PCT-member country. The PCT process **simplifies** the filing of patent applications on the same invention in member countries, but **does not result** in a grant of "an international patent" and does not eliminate the need of applicants to file additional documents and fees in countries where patent protection is desired.

Almost every country has its own patent law, and a person desiring a patent in a particular country must make an application for patent in that country in accordance with its particular laws. Since the laws of many countries differ in various respects from the patent law of the United States, applicants are advised to seek guidance from specific foreign countries to ensure that patent rights are not lost prematurely.

Applicants also are advised that in the case of inventions made in the United States, the Director of the USPTO must issue a license before applicants can apply for a patent in a foreign country. The filing of a U.S. patent application serves as a request for a foreign filing license. The application's filing receipt contains further information and guidance as to the status of applicant's license for foreign filing.

Applicants may wish to consult the USPTO booklet, "General Information Concerning Patents" (specifically, the section entitled "Treaties and Foreign Patents") for more information on timeframes and deadlines for filing foreign patent applications. The guide is available either by contacting the USPTO Contact Center at 800-786-9199, or it can be viewed on the USPTO website at http://www.uspto.gov/web/offices/pac/doc/general/index.html.

For information on preventing theft of your intellectual property (patents, trademarks and copyrights), you may wish to consult the U.S. Government website, http://www.stopfakes.gov. Part of a Department of Commerce initiative, this website includes self-help "toolkits" giving innovators guidance on how to protect intellectual property in specific countries such as China, Korea and Mexico. For questions regarding patent enforcement issues, applicants may call the U.S. Government hotline at 1-866-999-HALT (1-866-999-4158).

LICENSE FOR FOREIGN FILING UNDER

Title 35, United States Code, Section 184

Title 37, Code of Federal Regulations, 5.11 & 5.15

GRANTED

The applicant has been granted a license under 35 U.S.C. 184, if the phrase "IF REQUIRED, FOREIGN FILING LICENSE GRANTED" followed by a date appears on this form. Such licenses are issued in all applications where the conditions for issuance of a license have been met, regardless of whether or not a license may be required as

set forth in 37 CFR 5.15. The scope and limitations of this license are set forth in 37 CFR 5.15(a) unless an earlier license has been issued under 37 CFR 5.15(b). The license is subject to revocation upon written notification. The date indicated is the effective date of the license, unless an earlier license of similar scope has been granted under 37 CFR 5.13 or 5.14.

This license is to be retained by the licensee and may be used at any time on or after the effective date thereof unless it is revoked. This license is automatically transferred to any related applications(s) filed under 37 CFR 1.53(d). This license is not retroactive.

The grant of a license does not in any way lessen the responsibility of a licensee for the security of the subject matter as imposed by any Government contract or the provisions of existing laws relating to espionage and the national security or the export of technical data. Licensees should apprise themselves of current regulations especially with respect to certain countries, of other agencies, particularly the Office of Defense Trade Controls, Department of State (with respect to Arms, Munitions and Implements of War (22 CFR 121-128)); the Bureau of Industry and Security, Department of Commerce (15 CFR parts 730-774); the Office of Foreign AssetsControl, Department of Treasury (31 CFR Parts 500+) and the Department of Energy.

NOT GRANTED

No license under 35 U.S.C. 184 has been granted at this time, if the phrase "IF REQUIRED, FOREIGN FILING LICENSE GRANTED" DOES NOT appear on this form. Applicant may still petition for a license under 37 CFR 5.12, if a license is desired before the expiration of 6 months from the filing date of the application. If 6 months has lapsed from the filing date of this application and the licensee has not received any indication of a secrecy order under 35 U.S.C. 181, the licensee may foreign file the application pursuant to 37 CFR 5.15(b).

Under the Paperwork Reduction Act of 1995, no persons are required to respond to a collection of information unless it contains a valid OMB control number.

Application Data Sheet 37 CFR 1.76	Attorney Docket Number	EMKNNZ00301
	Application Number	
Title of Invention	METHOD AND APPARATUS FOR MAGNETIC INDUCTION THERAPY	

The application data sheet is part of the provisional or nonprovisional application for which it is being submitted. The following form contains the bibliographic data arranged in a format specified by the United States Patent and Trademark Office as outlined in 37 CFR 1.76.
This document may be completed electronically and submitted to the Office in electronic format using the Electronic Filing System (EFS) or the document may be printed and included in a paper filed application.

Secrecy Order 37 CFR 5.2

☐ Portions or all of the application associated with this Application Data Sheet may fall under a Secrecy Order pursuant to 37 CFR 5.2 (Paper filers only. Applications that fall under Secrecy Order may not be filed electronically.)

Applicant Information:

Applicant 1 Remove

Applicant Authority ◉ Inventor ◯ Legal Representative under 35 U.S.C. 117 ◯ Party of Interest under 35 U.S.C. 118

Prefix	Given Name	Middle Name	Family Name	Suffix
	Daniel	Rogers	BURNETT	

Residence Information (Select One) ◉ US Residency ◯ Non US Residency ◯ Active US Military Service

City	San Francisco	State/Province	CA	Country of Residence i	US

Citizenship under 37 CFR 1.41(b) i US

Mailing Address of Applicant:

Address 1	588 Teresita Boulevard		
Address 2			
City	San Francisco	State/Province	CA
Postal Code	94127	Country i	US

Applicant 2 Remove

Applicant Authority ◉ Inventor ◯ Legal Representative under 35 U.S.C. 117 ◯ Party of Interest under 35 U.S.C. 118

Prefix	Given Name	Middle Name	Family Name	Suffix
	Christopher		HERMANSON	

Residence Information (Select One) ◉ US Residency ◯ Non US Residency ◯ Active US Military Service

City	Santa Cruz	State/Province	CA	Country of Residence i	US

Citizenship under 37 CFR 1.41(b) i US

Mailing Address of Applicant:

Address 1	85 Westdale Drive		
Address 2			
City	Santa Cruz	State/Province	CA
Postal Code	95060	Country i	US

All Inventors Must Be Listed - Additional Inventor Information blocks may be generated within this form by selecting the **Add** button. Add

Correspondence Information:

Enter either Customer Number or complete the Correspondence Information section below.
For further information see 37 CFR 1.33(a).

☐ **An Address is being provided for the correspondence Information of this application.**

Under the Paperwork Reduction Act of 1995, no persons are required to respond to a collection of information unless it contains a valid OMB control number.

Application Data Sheet 37 CFR 1.76	Attorney Docket Number	EMKNNZ00301
	Application Number	
Title of Invention	METHOD AND APPARATUS FOR MAGNETIC INDUCTION THERAPY	

Customer Number	40518		
Email Address	patent@lbhip.com	Add Email	Remove Email

Application Information:

Title of the Invention	METHOD AND APPARATUS FOR MAGNETIC INDUCTION THERAPY		
Attorney Docket Number	EMKNNZ00301	**Small Entity Status Claimed**	☒
Application Type	Nonprovisional		
Subject Matter	Utility		
Suggested Class (if any)		**Sub Class (if any)**	
Suggested Technology Center (if any)			
Total Number of Drawing Sheets (if any)	24	**Suggested Figure for Publication (if any)**	

Publication Information:

☐ Request Early Publication (Fee required at time of Request 37 CFR 1.219)

☐ **Request Not to Publish.** I hereby request that the attached application not be published under 35 U.S. C. 122(b) and certify that the invention disclosed in the attached application **has not and will not** be the subject of an application filed in another country, or under a multilateral international agreement, that requires publication at eighteen months after filing.

Representative Information:

Representative information should be provided for all practitioners having a power of attorney in the application. Providing this information in the Application Data Sheet does not constitute a power of attorney in the application (see 37 CFR 1.32).
Enter either Customer Number or complete the Representative Name section below. If both sections are completed the Customer Number will be used for the Representative Information during processing.

Please Select One:	◉ Customer Number	○ US Patent Practitioner	○ Limited Recognition (37 CFR 11.9)
Customer Number	40518		

Domestic Benefit/National Stage Information:

This section allows for the applicant to either claim benefit under 35 U.S.C. 119(e), 120, 121, or 365(c) or indicate National Stage entry from a PCT application. Providing this information in the application data sheet constitutes the specific reference required by 35 U.S.C. 119(e) or 120, and 37 CFR 1.78(a)(2) or CFR 1.78(a)(4), and need not otherwise be made part of the specification.

Prior Application Status	Pending		Remove
Application Number	Continuity Type	Prior Application Number	Filing Date (YYYY-MM-DD)
	Continuation in part of	11866329	2007-10-02
Prior Application Status	Expired		Remove
Application Number	Continuity Type	Prior Application Number	Filing Date (YYYY-MM-DD)
11866329	non provisional of	60848720	2006-10-02

Under the Paperwork Reduction Act of 1995, no persons are required to respond to a collection of information unless it contains a valid OMB control number.

Application Data Sheet 37 CFR 1.76	Attorney Docket Number	EMKNNZ00301
	Application Number	
Title of Invention	METHOD AND APPARATUS FOR MAGNETIC INDUCTION THERAPY	

Additional Domestic Benefit/National Stage Data may be generated within this form by selecting the **Add** button. Add

Foreign Priority Information:

This section allows for the applicant to claim benefit of foreign priority and to identify any prior foreign application for which priority is not claimed. Providing this information in the application data sheet constitutes the claim for priority as required by 35 U.S.C. 119(b) and 37 CFR 1.55(a).

Remove

Application Number	Country [i]	Parent Filing Date (YYYY-MM-DD)	Priority Claimed
			◉ Yes ◯ No

Additional Foreign Priority Data may be generated within this form by selecting the **Add** button. Add

Assignee Information:

Providing this information in the application data sheet does not substitute for compliance with any requirement of part 3 of Title 37 of the CFR to have an assignment recorded in the Office.

Assignee 1 Remove

If the Assignee is an Organization check here. ☐

Prefix	**Given Name**	Middle Name	**Family Name**	Suffix

Mailing Address Information:

Address 1			
Address 2			
City		**State/Province**	
Country [i]		Postal Code	
Phone Number		Fax Number	
Email Address			

Additional Assignee Data may be generated within this form by selecting the **Add** button. Add

Signature:

A signature of the applicant or representative is required in accordance with 37 CFR 1.33 and 10.18. Please see 37 CFR 1.4(d) for the form of the signature.

Signature				Date (YYYY-MM-DD)	
First Name		Last Name		Registration Number	

Under the Paperwork Reduction Act of 1995, no persons are required to respond to a collection of information unless it contains a valid OMB control number.

Application Data Sheet 37 CFR 1.76	Attorney Docket Number	EMKNNZ00301
	Application Number	
Title of Invention	METHOD AND APPARATUS FOR MAGNETIC INDUCTION THERAPY	

This collection of information is required by 37 CFR 1.76. The information is required to obtain or retain a benefit by the public which is to file (and by the USPTO to process) an application. Confidentiality is governed by 35 U.S.C. 122 and 37 CFR 1.14. This collection is estimated to take 23 minutes to complete, including gathering, preparing, and submitting the completed application data sheet form to the USPTO. Time will vary depending upon the individual case. Any comments on the amount of time you require to complete this form and/or suggestions for reducing this burden, should be sent to the Chief Information Officer, U.S. Patent and Trademark Office, U.S. Department of Commerce, P.O. Box 1450, Alexandria, VA 22313-1450. DO NOT SEND FEES OR COMPLETED FORMS TO THIS ADDRESS. **SEND TO: Commissioner for Patents, P.O. Box 1450, Alexandria, VA 22313-1450.**

Privacy Act Statement

The Privacy Act of 1974 (P.L. 93-579) requires that you be given certain information in connection with your submission of the attached form related to a patent application or patent. Accordingly, pursuant to the requirements of the Act, please be advised that: (1) the general authority for the collection of this information is 35 U.S.C. 2(b)(2); (2) furnishing of the information solicited is voluntary; and (3) the principal purpose for which the information is used by the U.S. Patent and Trademark Office is to process and/or examine your submission related to a patent application or patent. If you do not furnish the requested information, the U.S. Patent and Trademark Office may not be able to process and/or examine your submission, which may result in termination of proceedings or abandonment of the application or expiration of the patent.

The information provided by you in this form will be subject to the following routine uses:

1. The information on this form will be treated confidentially to the extent allowed under the Freedom of Information Act (5 U.S.C. 552) and the Privacy Act (5 U.S.C. 552a). Records from this system of records may be disclosed to the Department of Justice to determine whether the Freedom of Information Act requires disclosure of these records.

2. A record from this system of records may be disclosed, as a routine use, in the course of presenting evidence to a court, magistrate, or administrative tribunal, including disclosures to opposing counsel in the course of settlement negotiations.

3. A record in this system of records may be disclosed, as a routine use, to a Member of Congress submitting a request involving an individual, to whom the record pertains, when the individual has requested assistance from the Member with respect to the subject matter of the record.

4. A record in this system of records may be disclosed, as a routine use, to a contractor of the Agency having need for the information in order to perform a contract. Recipients of information shall be required to comply with the requirements of the Privacy Act of 1974, as amended, pursuant to 5 U.S.C. 552a(m).

5. A record related to an International Application filed under the Patent Cooperation Treaty in this system of records may be disclosed, as a routine use, to the International Bureau of the World Intellectual Property Organization, pursuant to the Patent Cooperation Treaty.

6. A record in this system of records may be disclosed, as a routine use, to another federal agency for purposes of National Security review (35 U.S.C. 181) and for review pursuant to the Atomic Energy Act (42 U.S.C. 218(c)).

7. A record from this system of records may be disclosed, as a routine use, to the Administrator, General Services, or his/her designee, during an inspection of records conducted by GSA as part of that agency's responsibility to recommend improvements in records management practices and programs, under authority of 44 U.S.C. 2904 and 2906. Such disclosure shall be made in accordance with the GSA regulations governing inspection of records for this purpose, and any other relevant (i.e., GSA or Commerce) directive. Such disclosure shall not be used to make determinations about individuals.

8. A record from this system of records may be disclosed, as a routine use, to the public after either publication of the application pursuant to 35 U.S.C. 122(b) or issuance of a patent pursuant to 35 U.S.C. 151. Further, a record may be disclosed, subject to the limitations of 37 CFR 1.14, as a routine use, to the public if the record was filed in an application which became abandoned or in which the proceedings were terminated and which application is referenced by either a published application, an application open to public inspections or an issued patent.

9. A record from this system of records may be disclosed, as a routine use, to a Federal, State, or local law enforcement agency, if the USPTO becomes aware of a violation or potential violation of law or regulation.

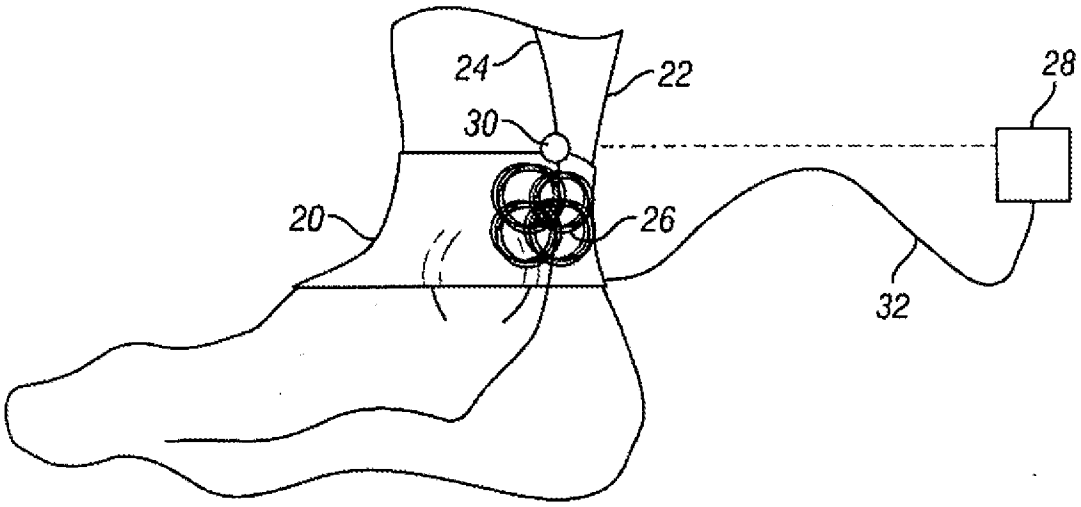

FIG. 1

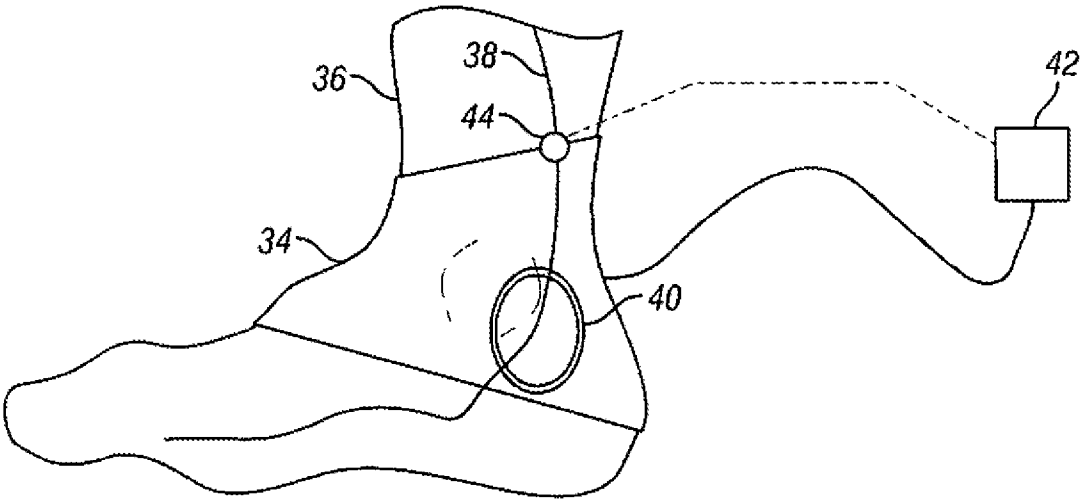

FIG. 2

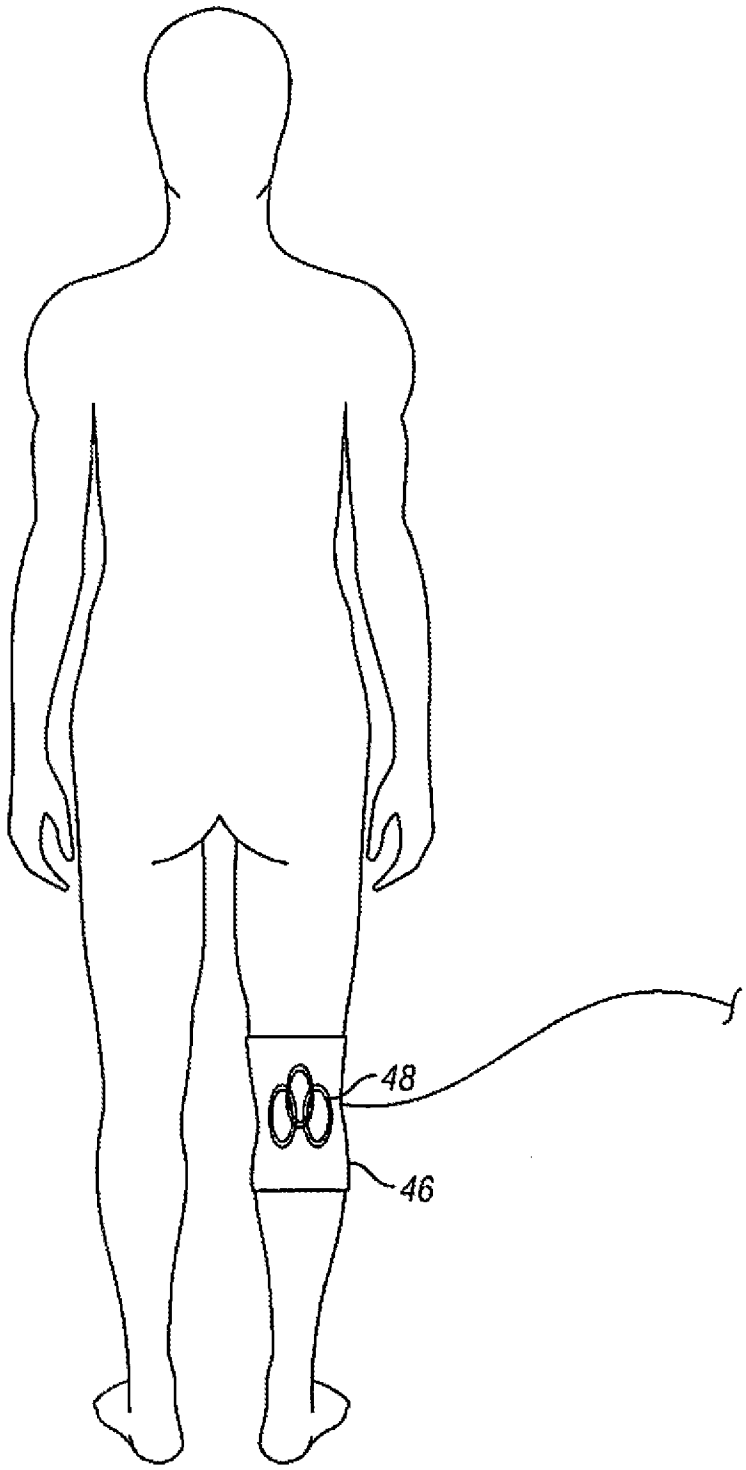

FIG. 3

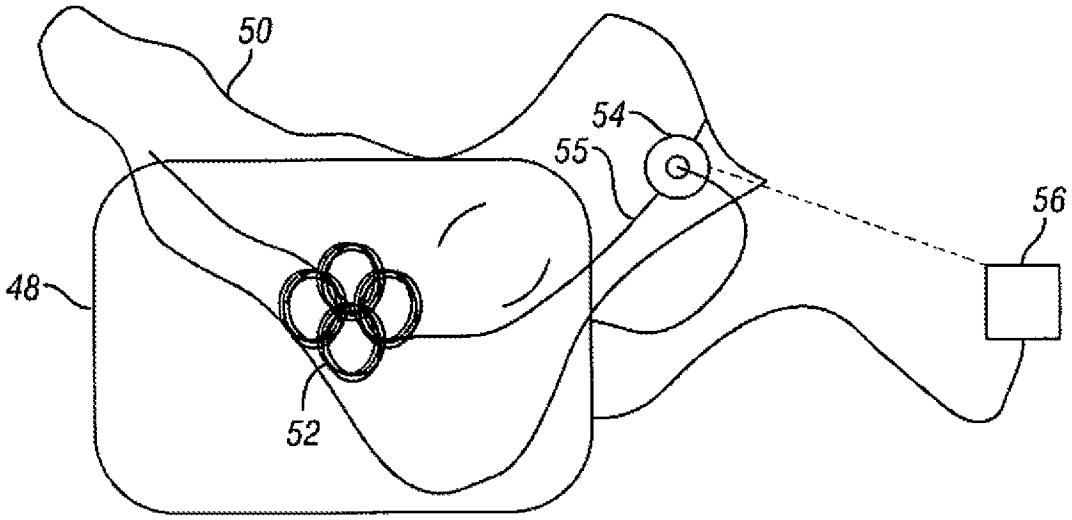

FIG. 4

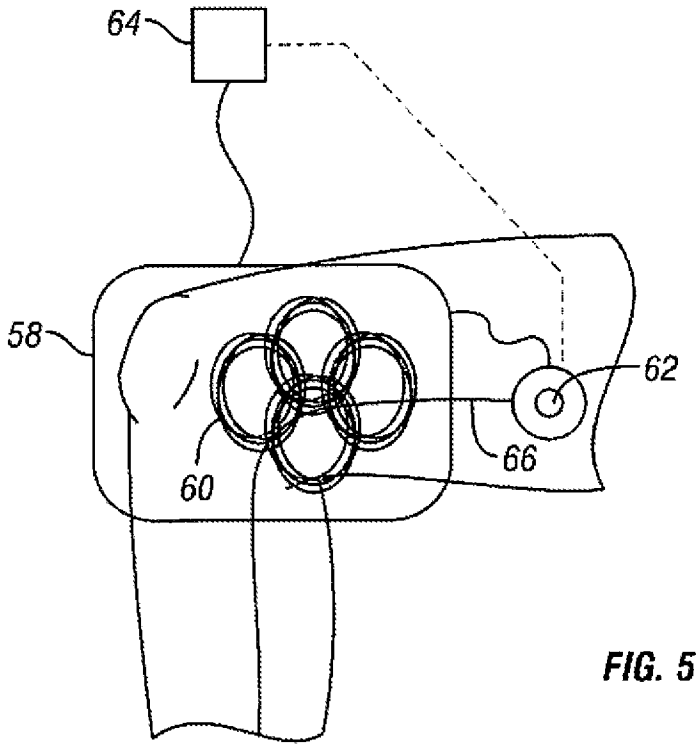

FIG. 5

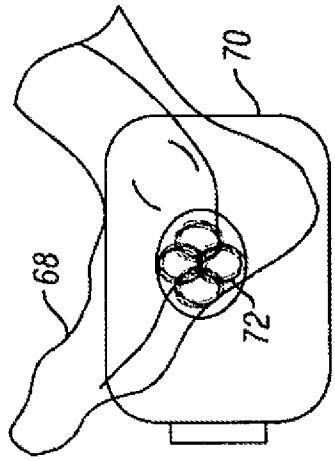

FIG. 6A

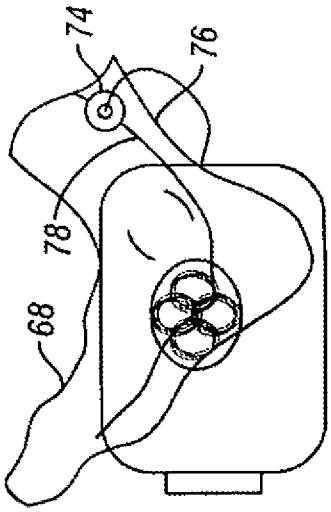

FIG. 6B

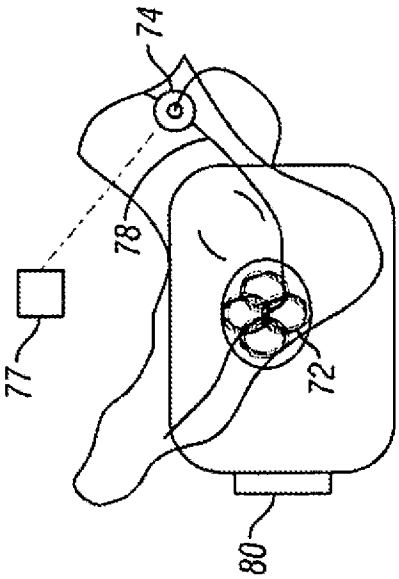

FIG. 6C

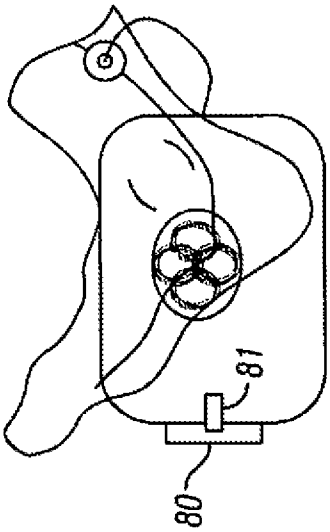

FIG. 6D

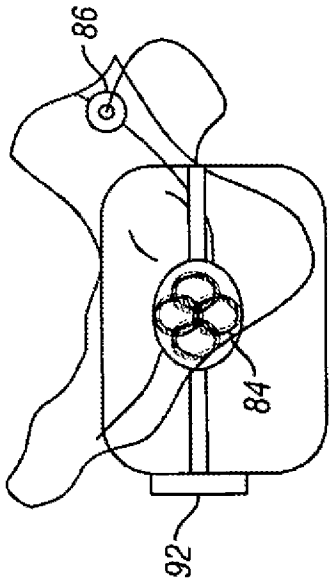

FIG. 7B

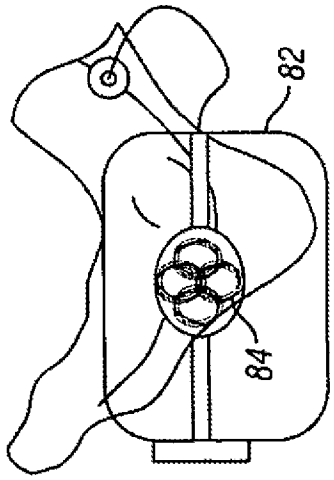

FIG. 7D

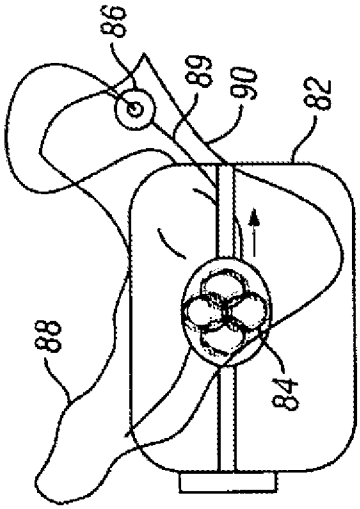

FIG. 7A

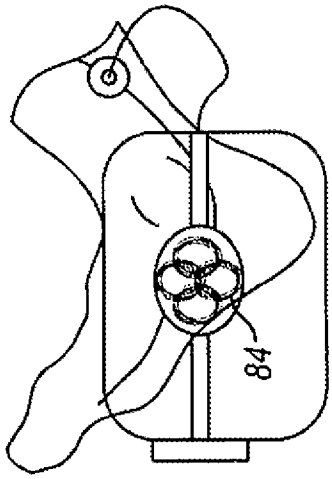

FIG. 7C

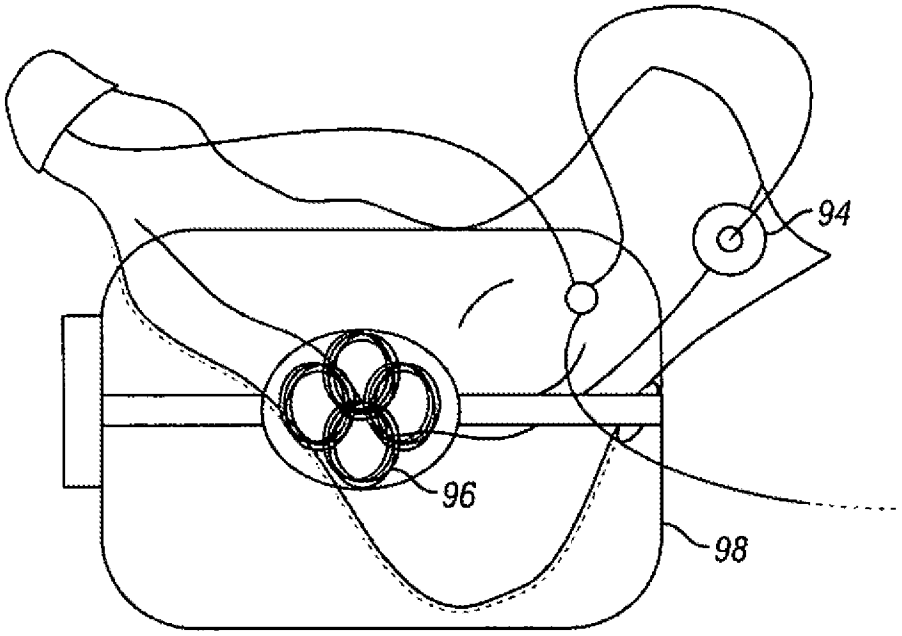

FIG. 8

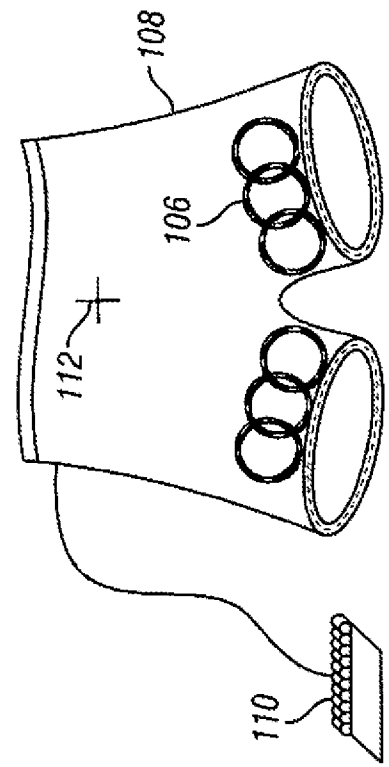

FIG. 9B

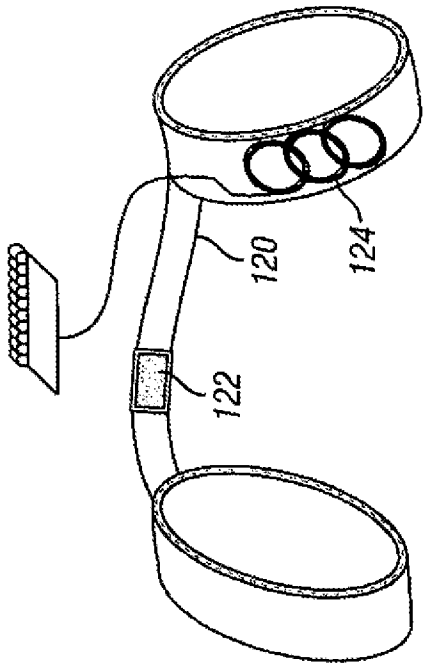

FIG. 9D

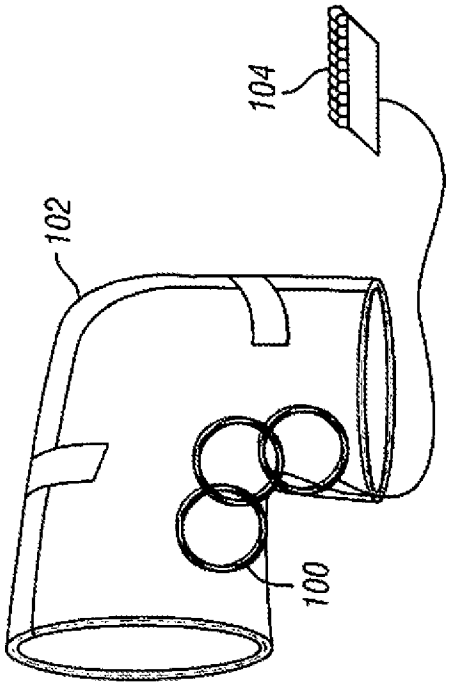

FIG. 9A

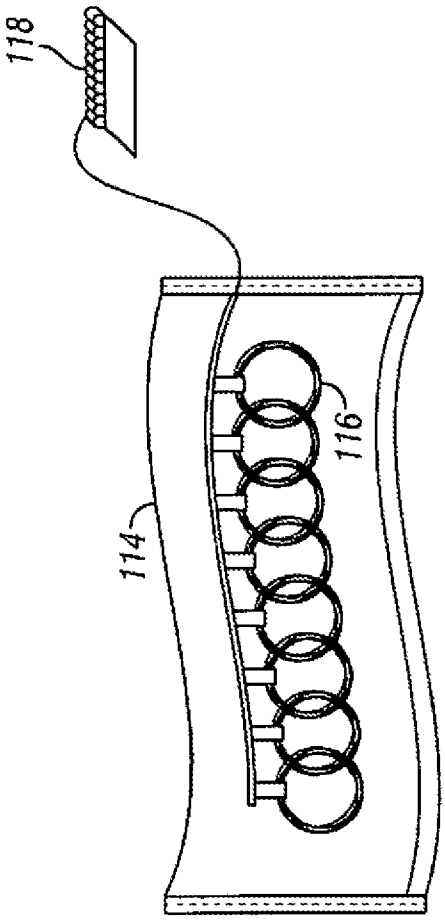

FIG. 9C

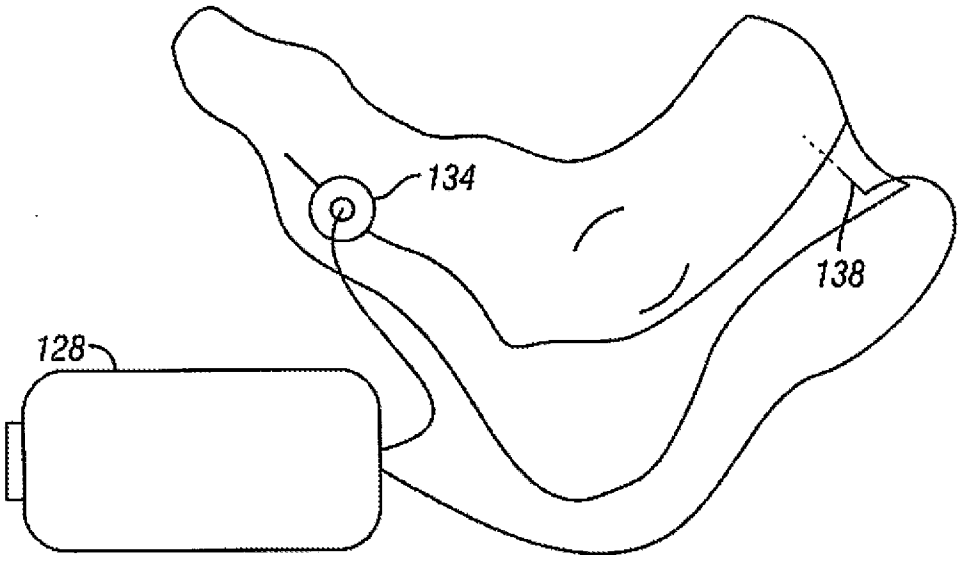

FIG. 10

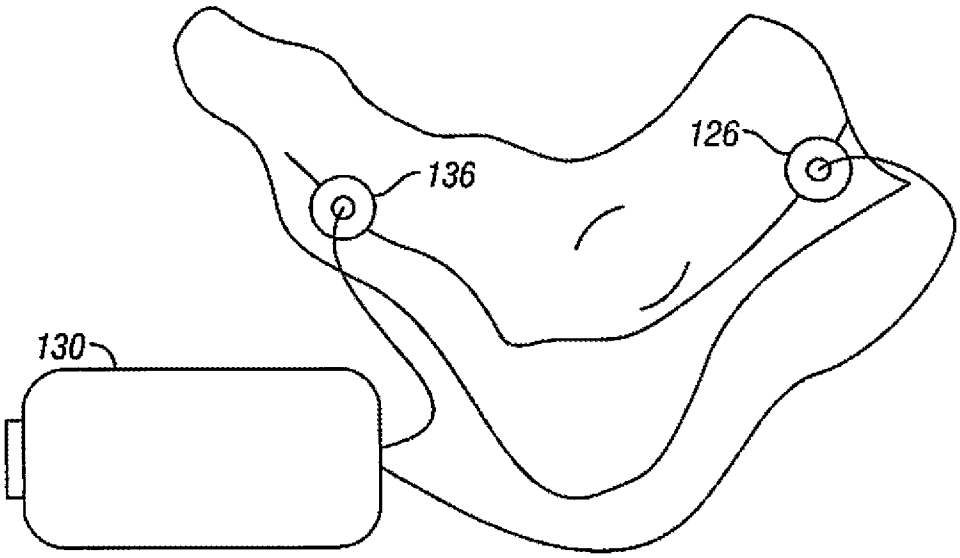

FIG. 11

FIG 12

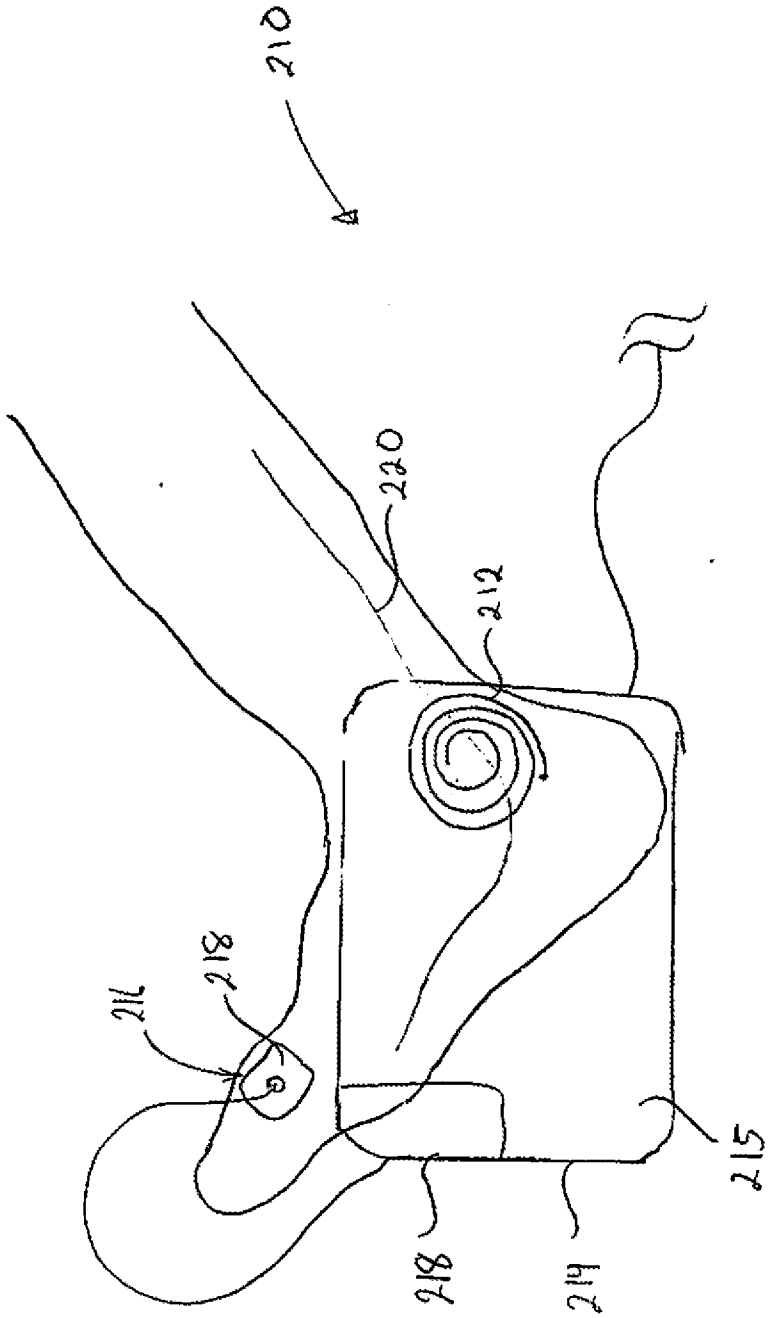

FIG 13

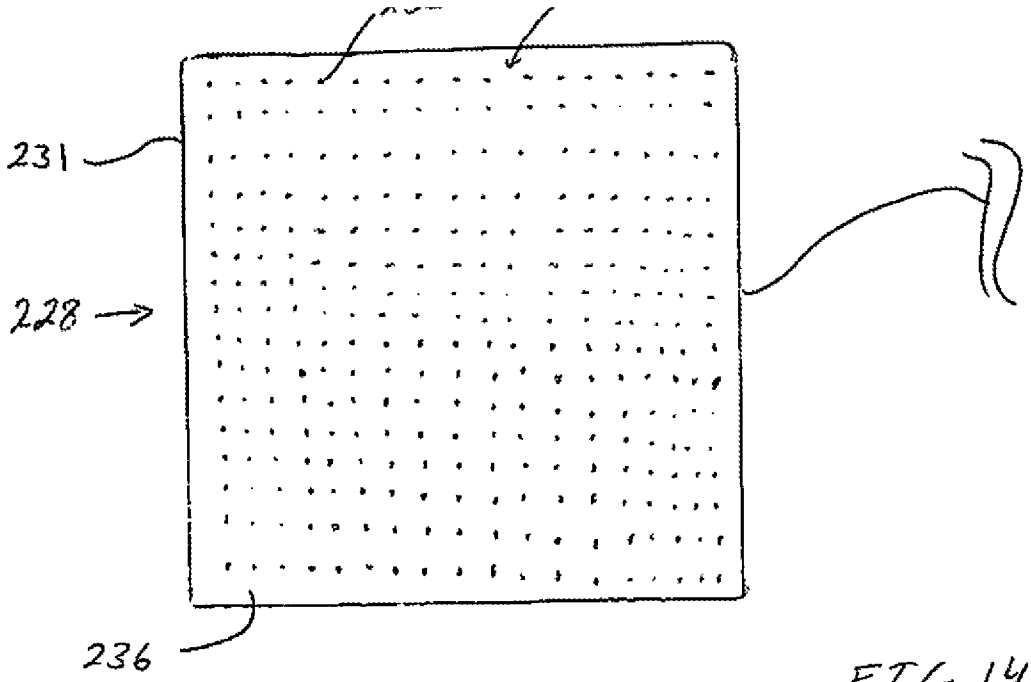

FIG 14

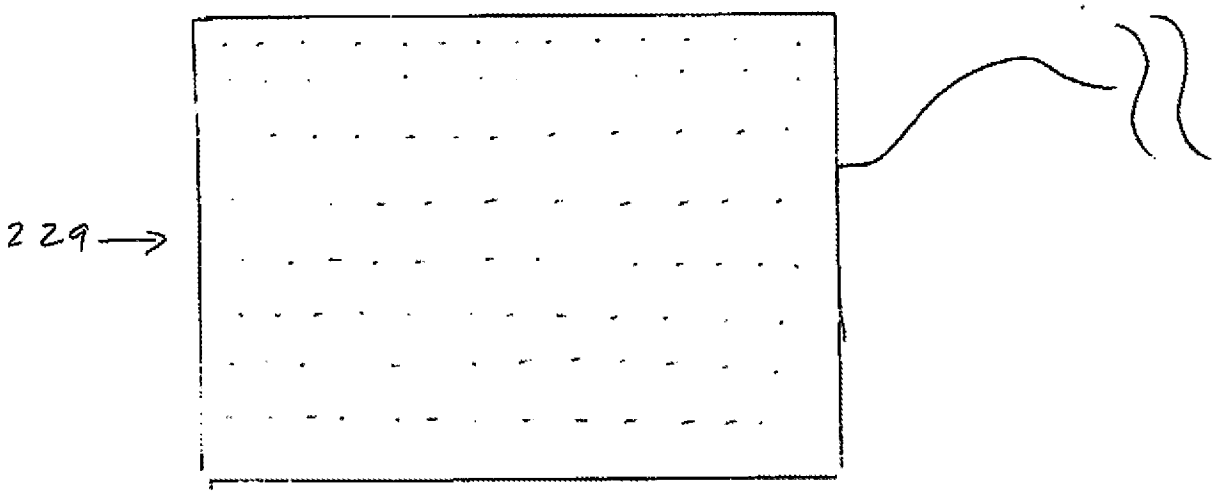

FIG 15

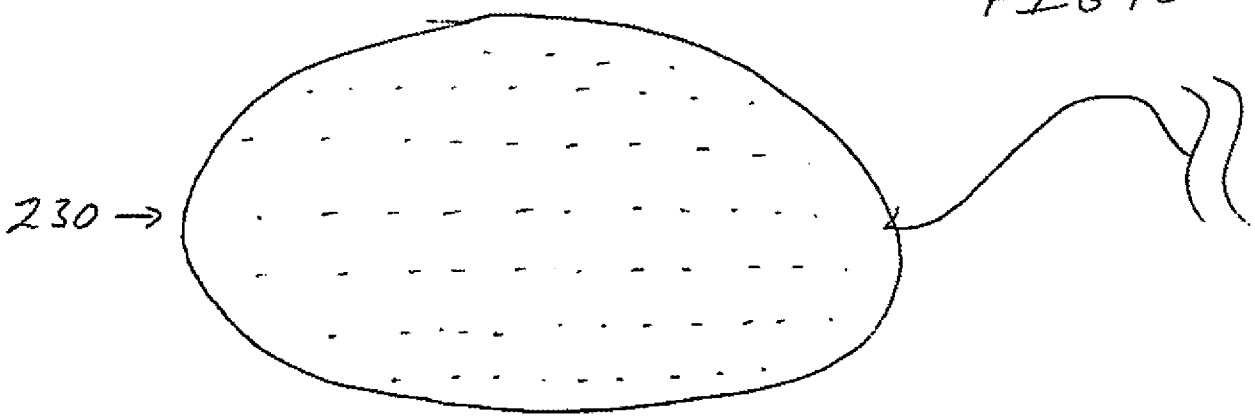

FIG 16

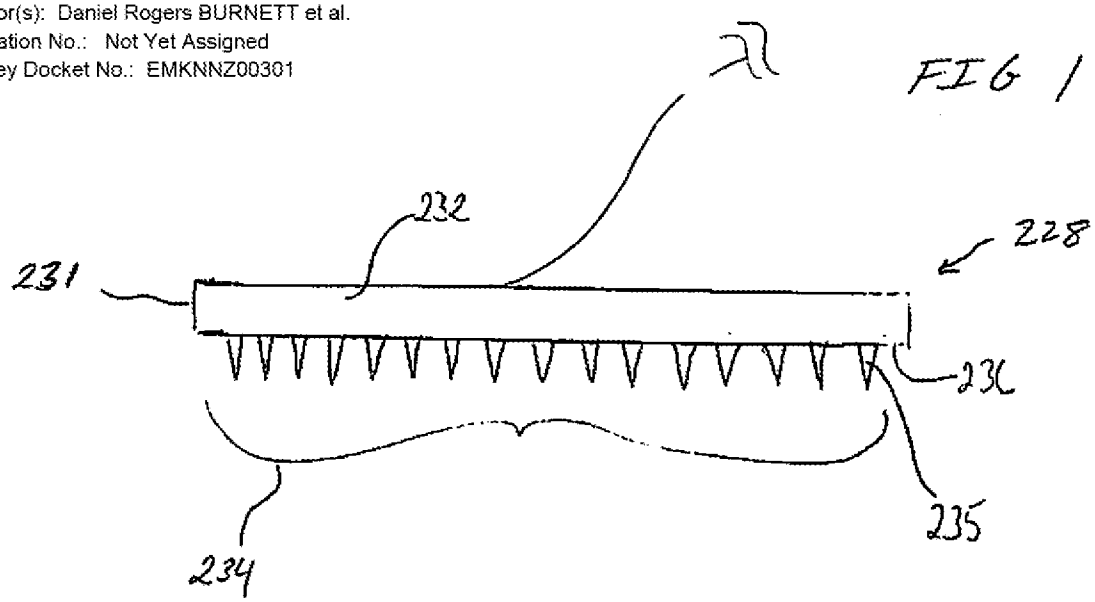

FIG 17

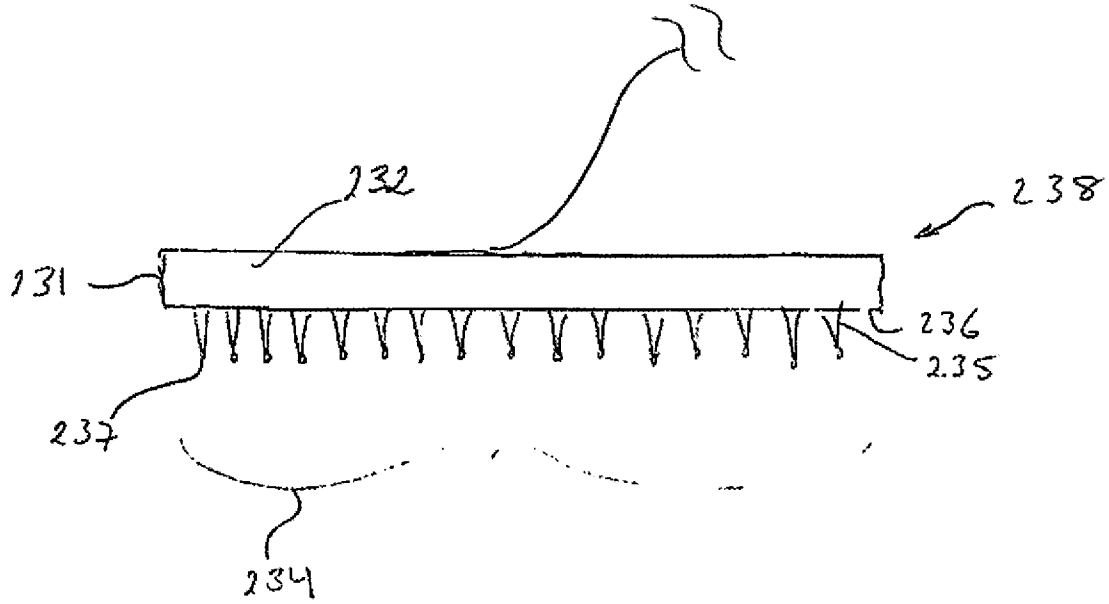

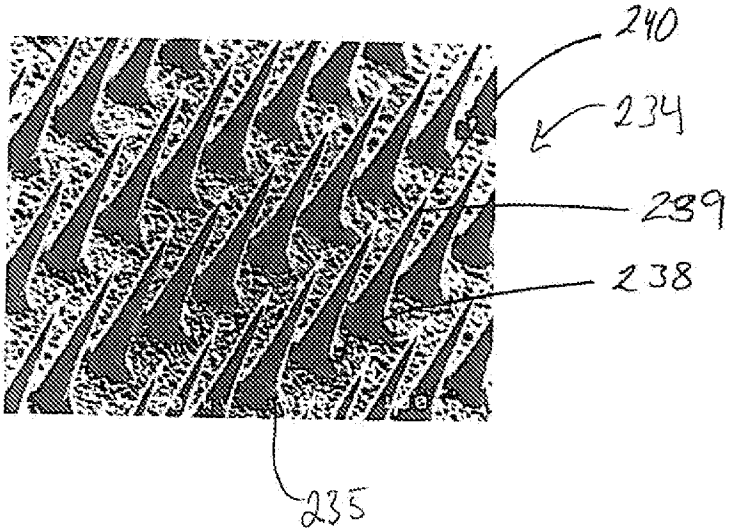

FIG 18

FIG 19

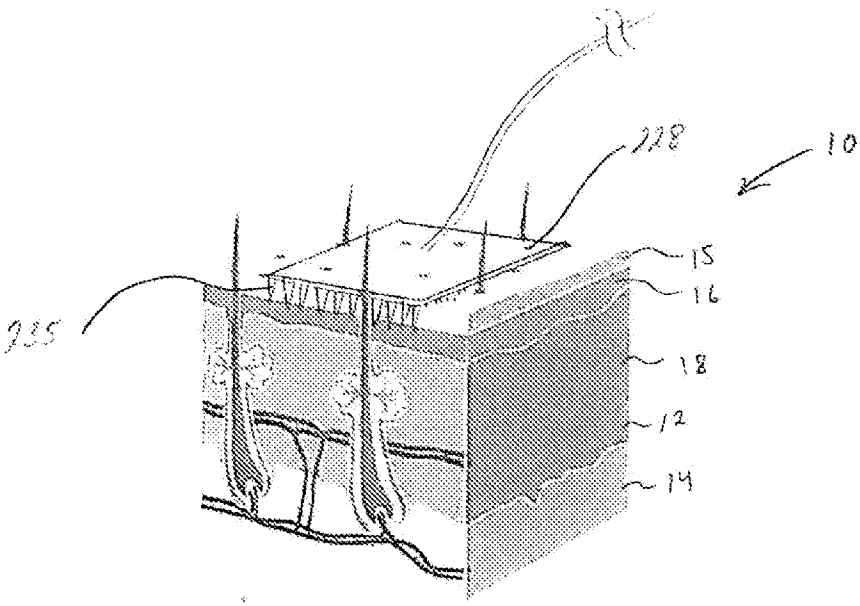

FIG 20a

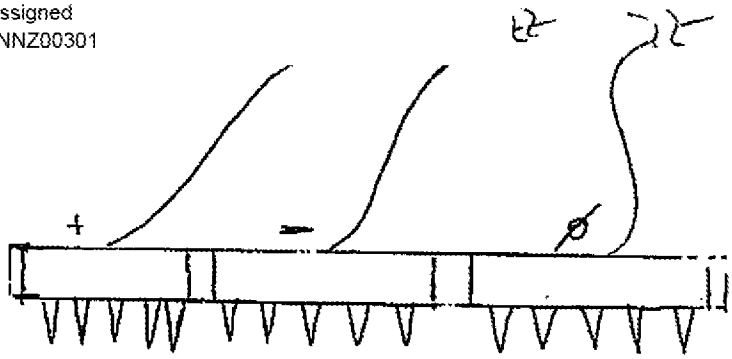

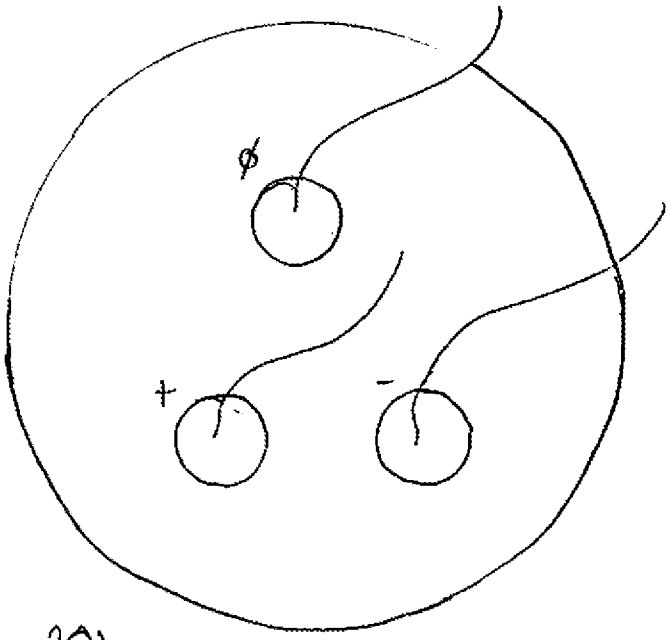

Fig 20b

Fig 20c

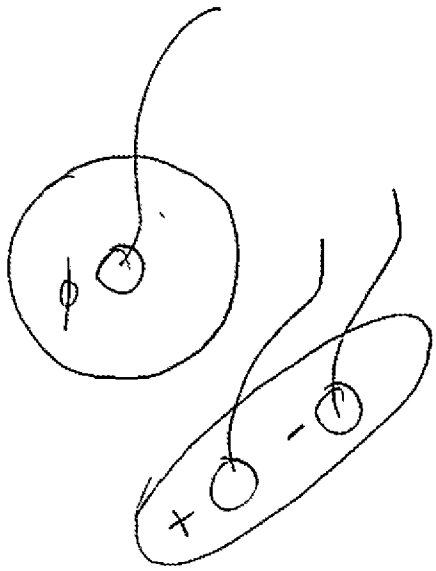

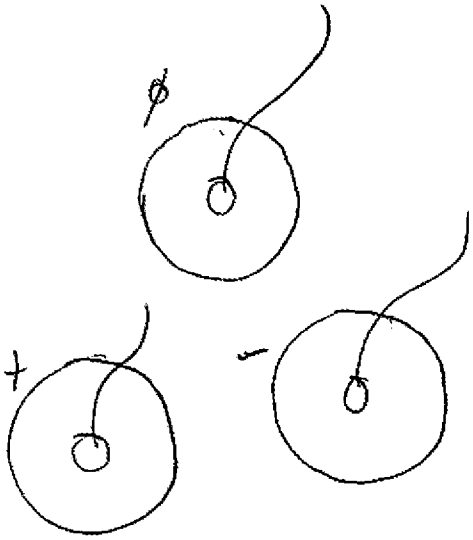

Fig 20d

FIG 21

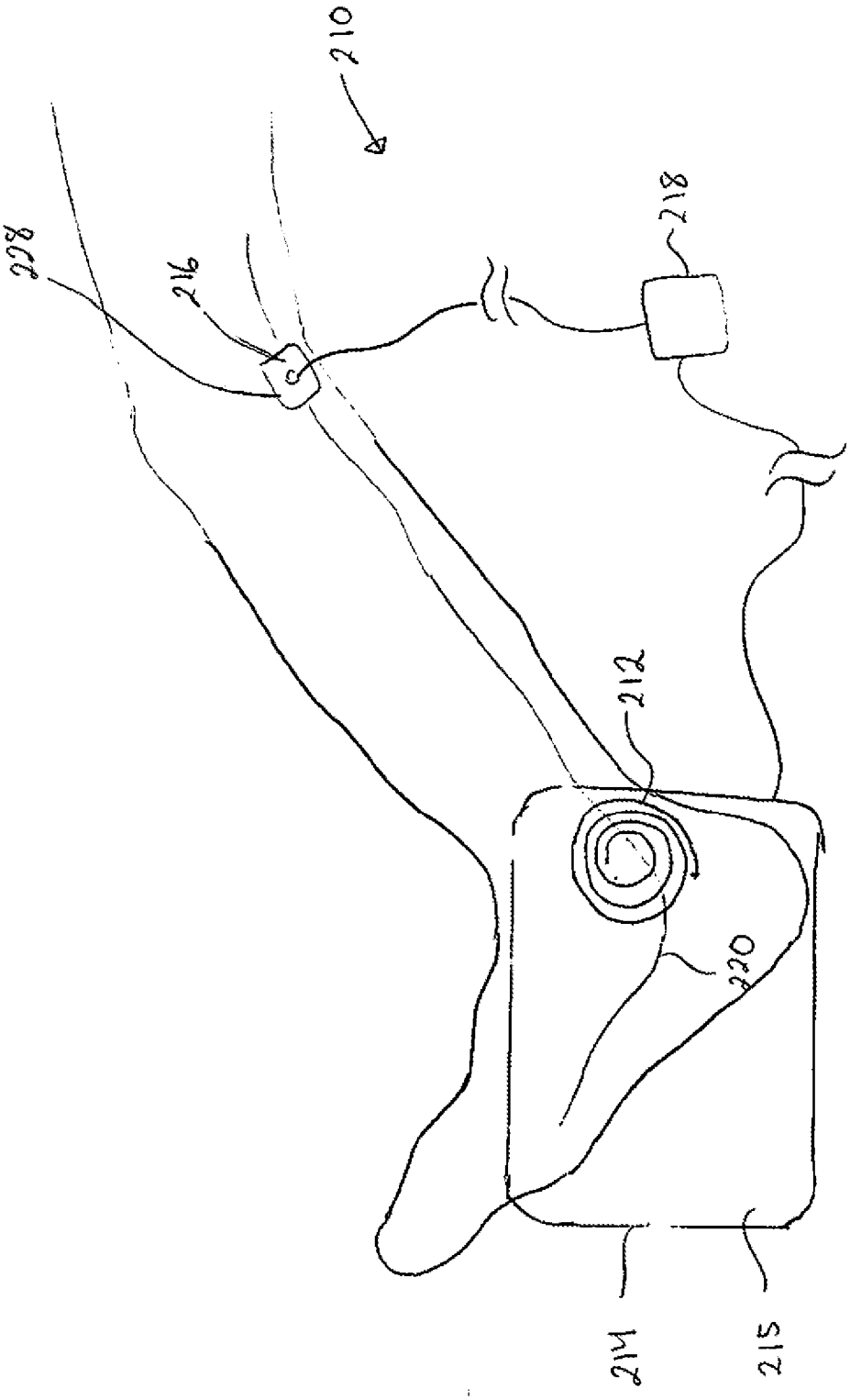

FIG 22

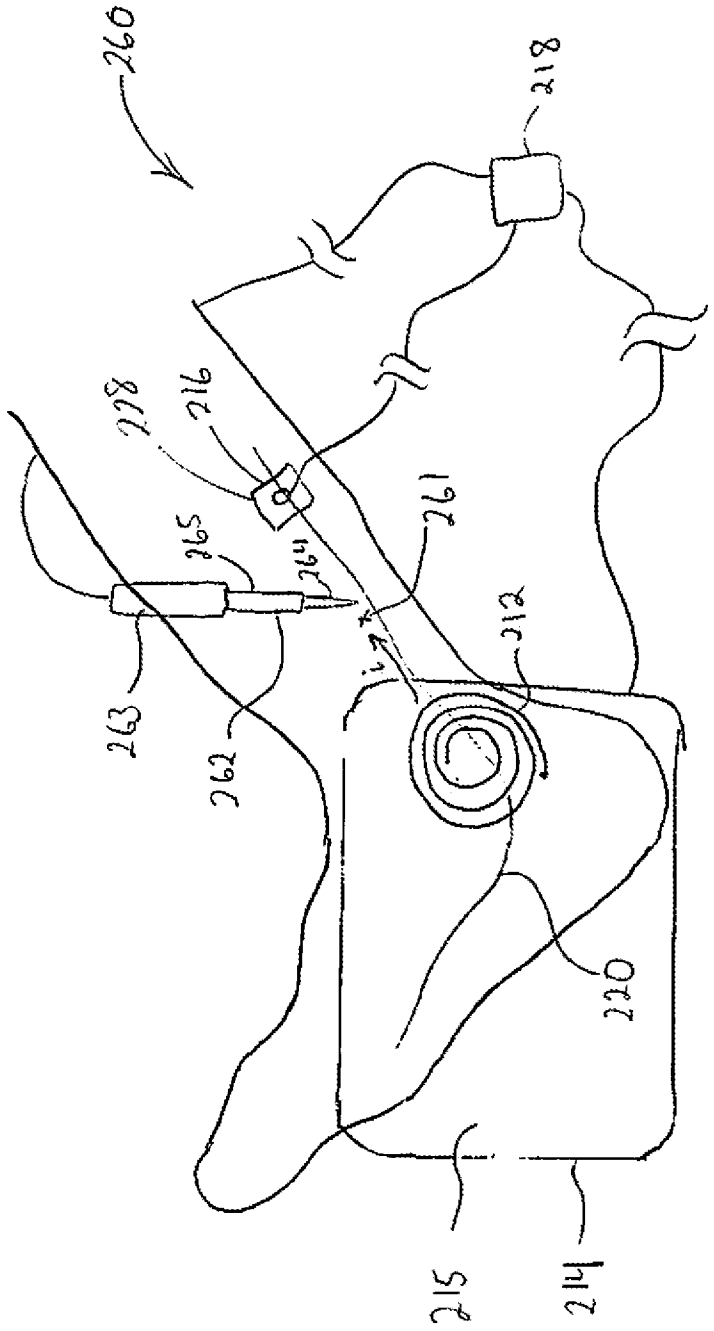

FIG 23

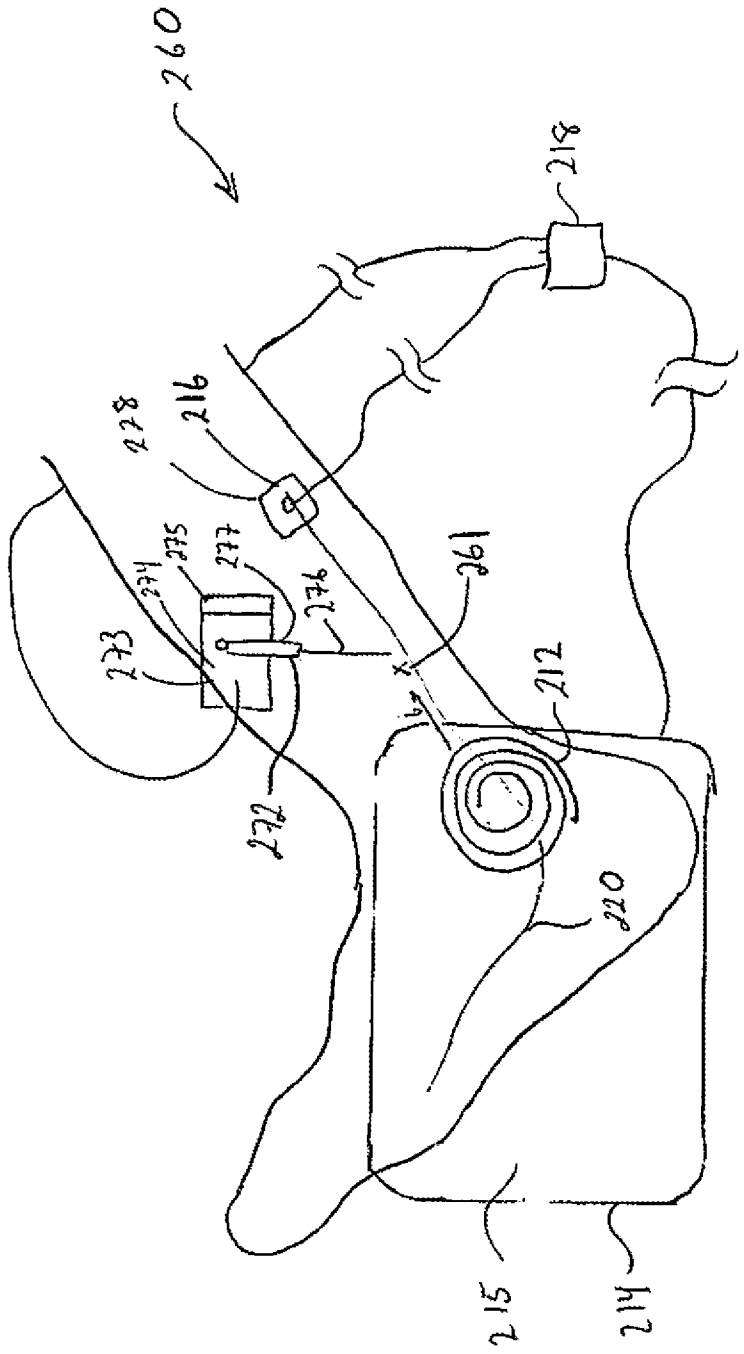

FIG 24

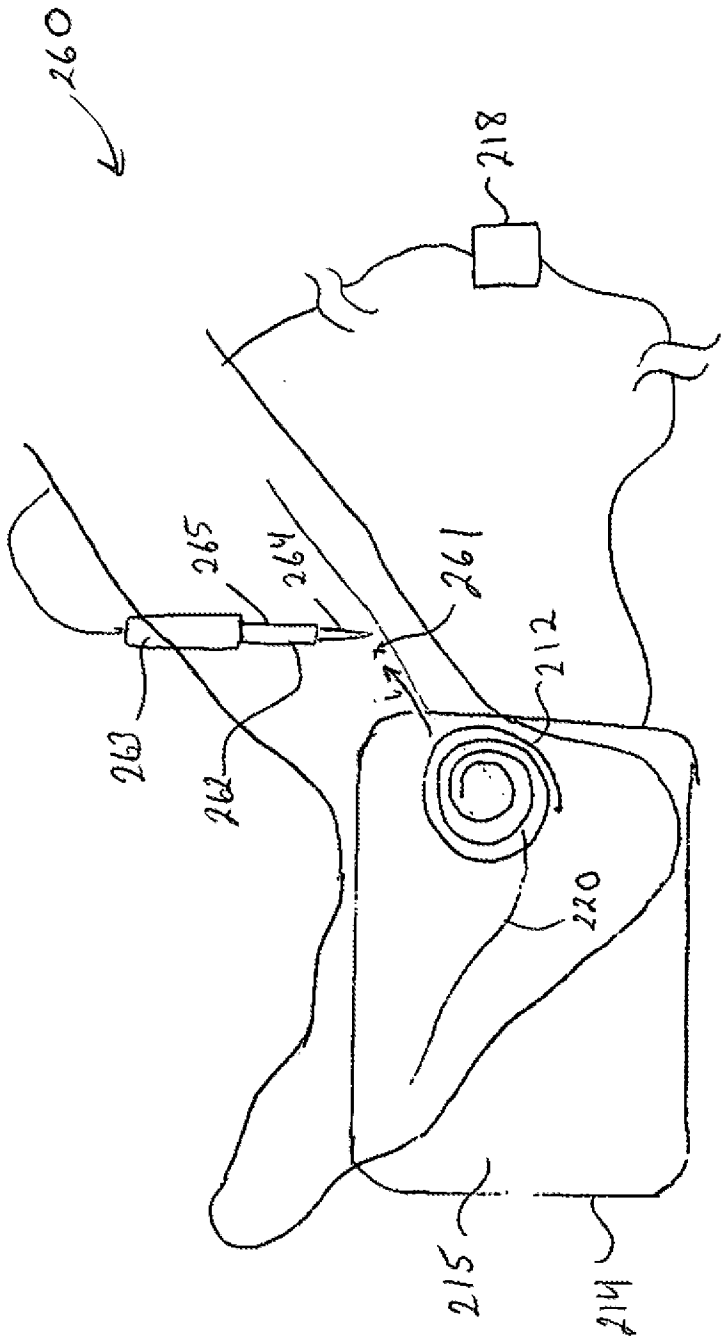

FIG 25

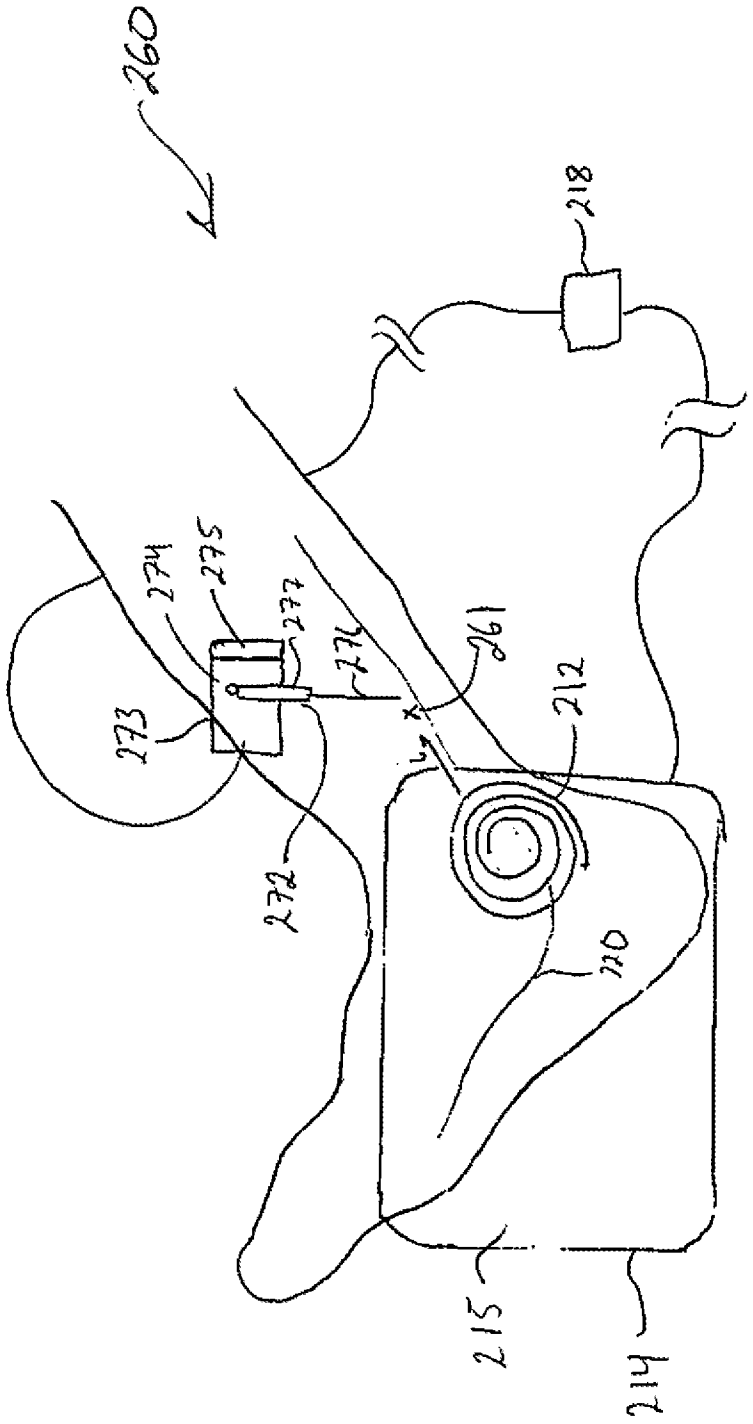

FIG 26

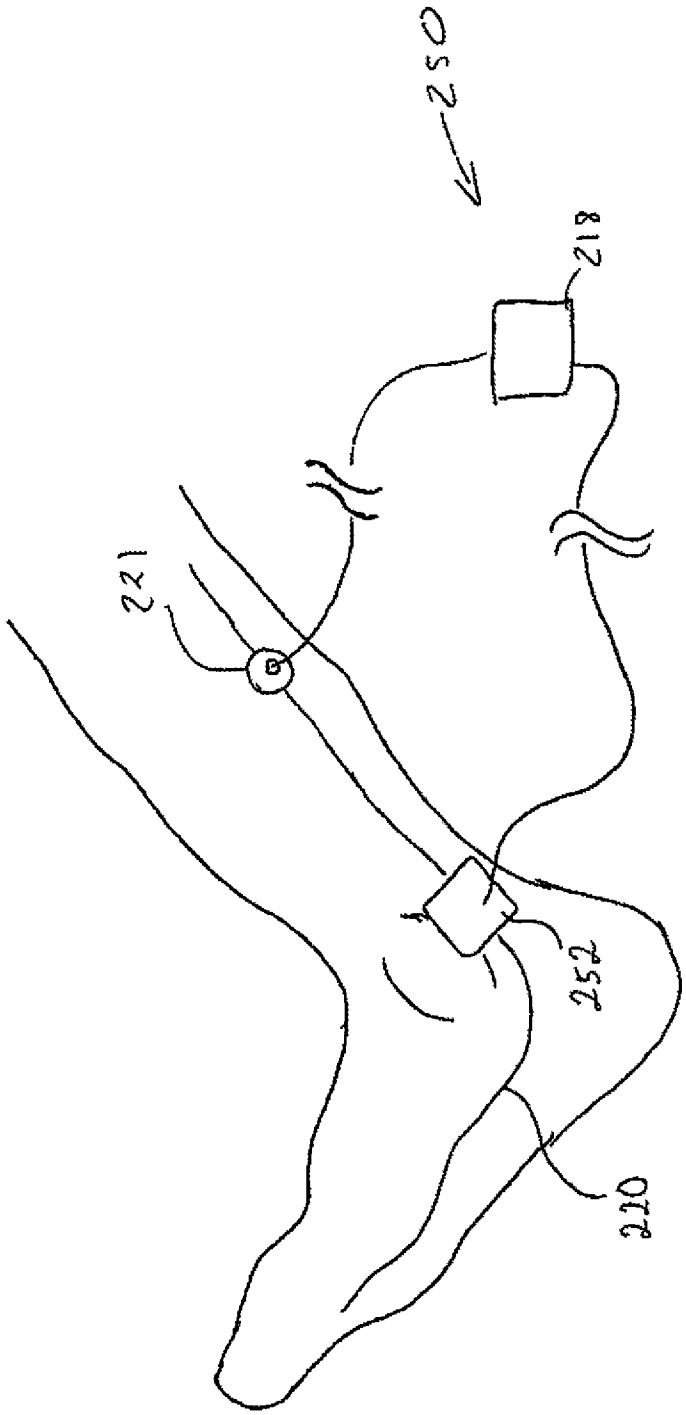

FIG 27

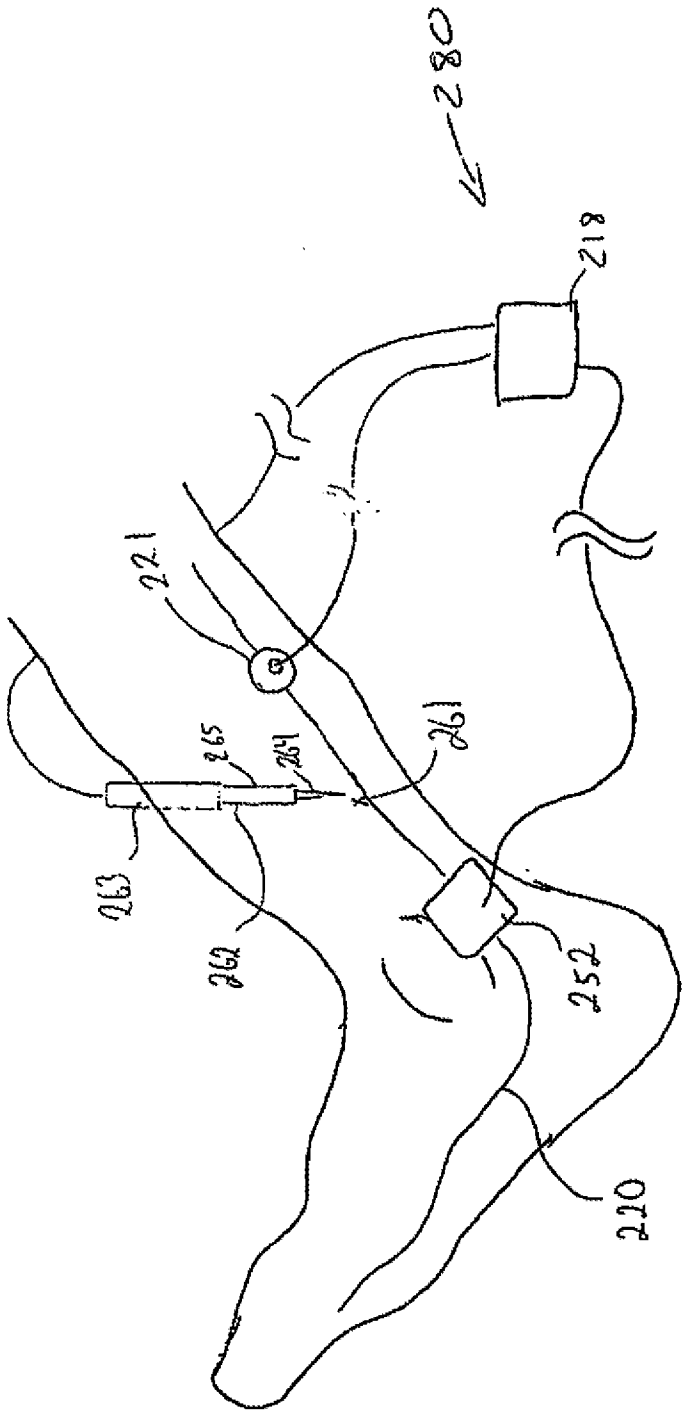

FIG 28

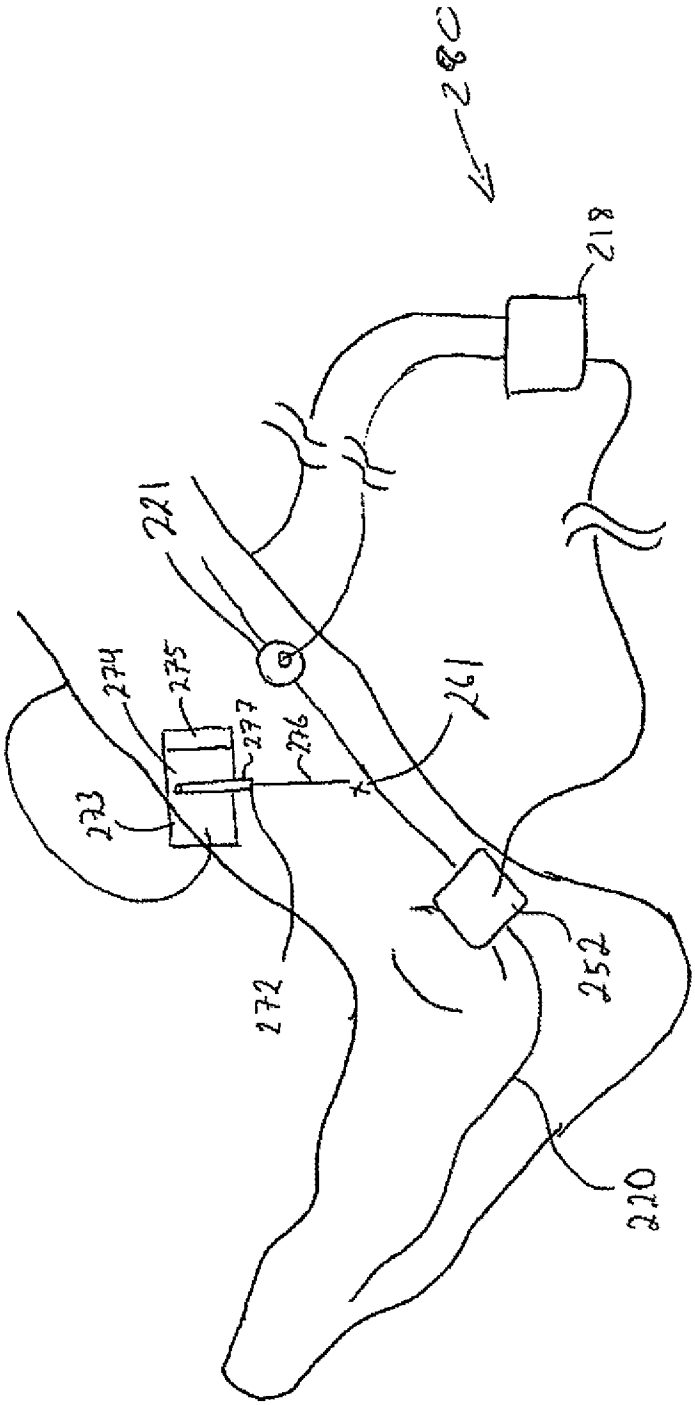

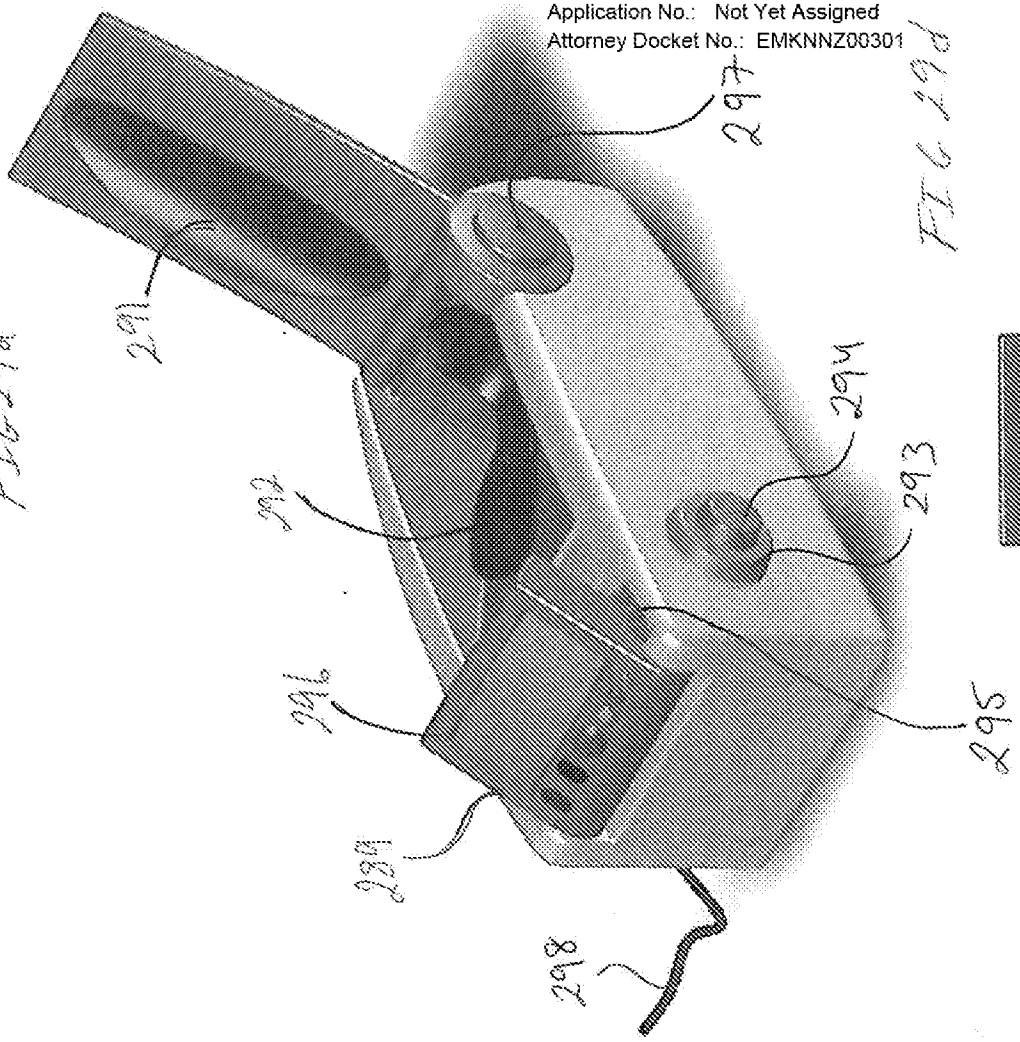

FIG 29a

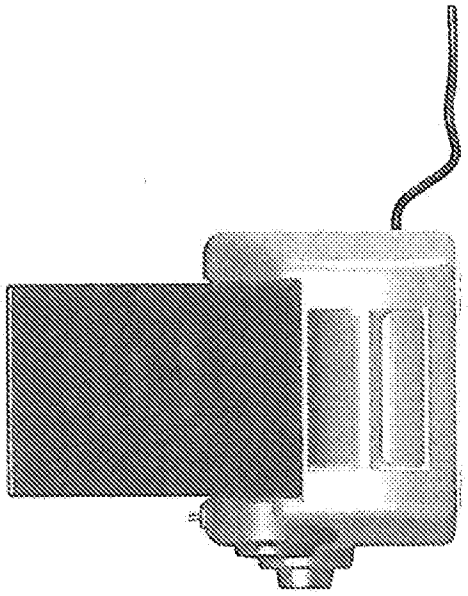

FIG 29d

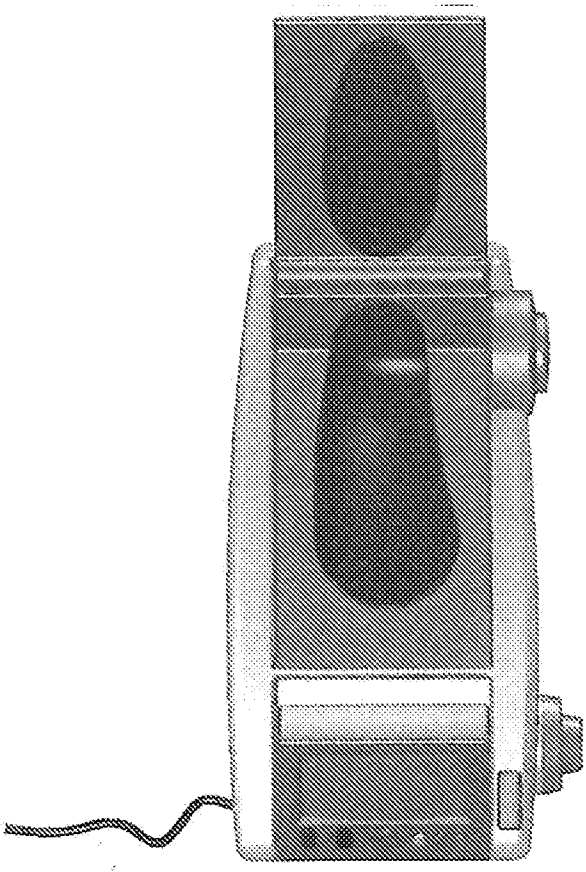

FIG 29b

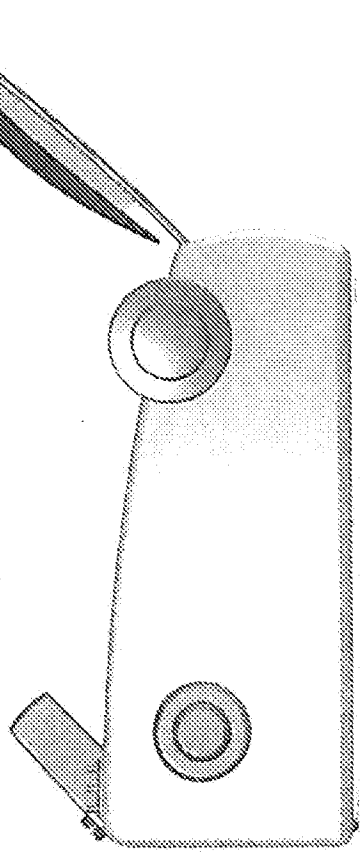

FIG 29c

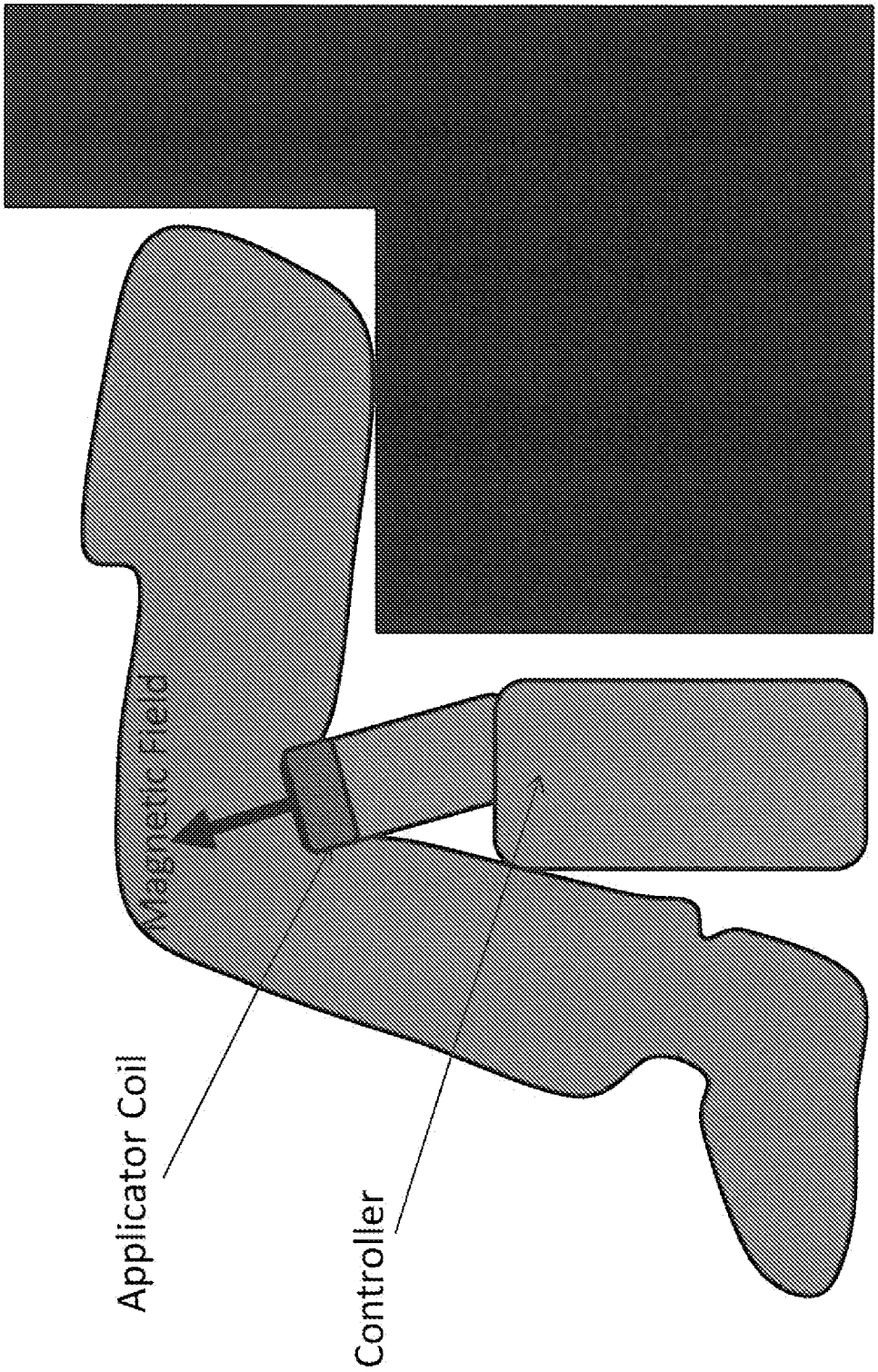
Applicator Coil
Controller
Magnetic Field

FIG 31

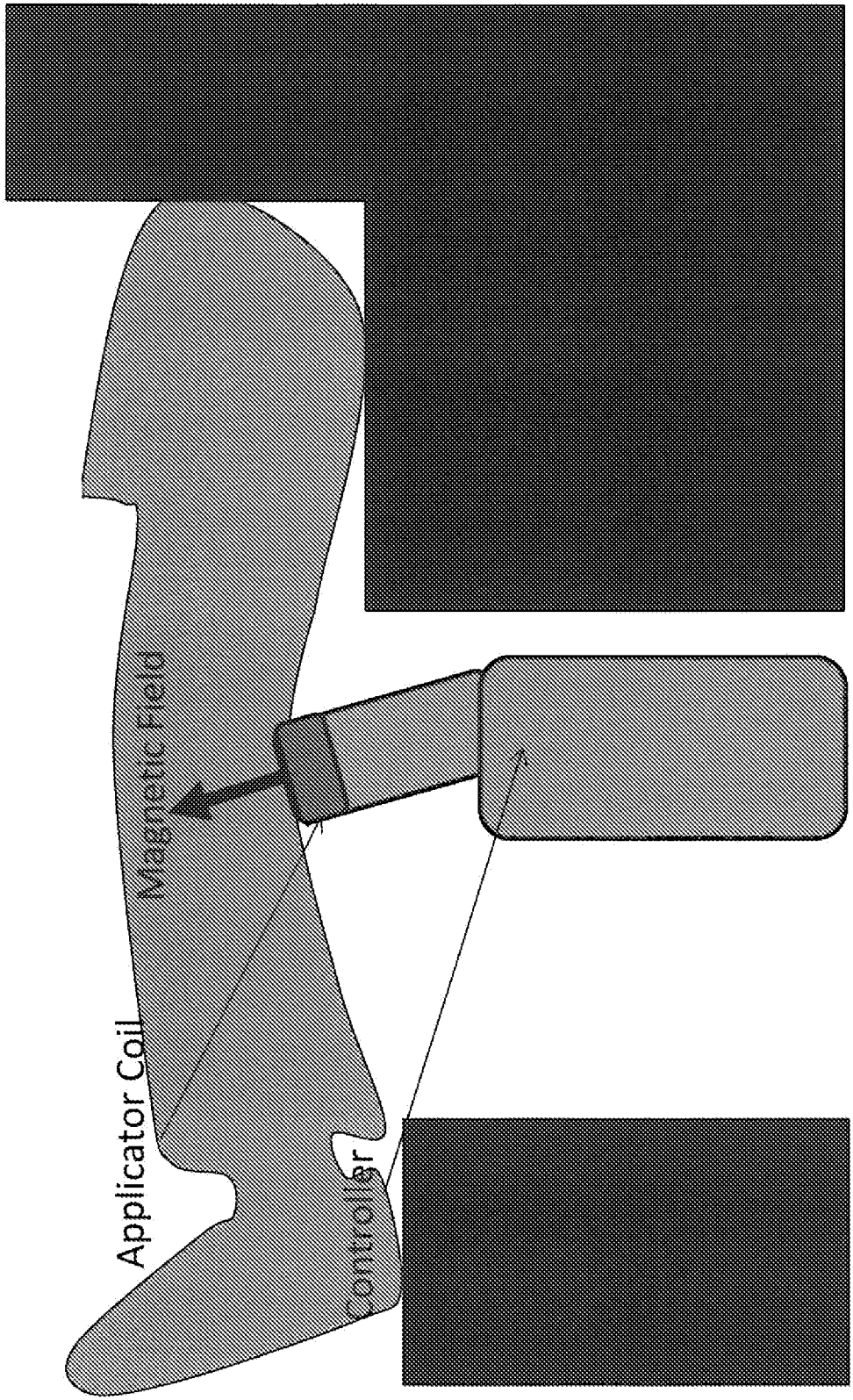

Electronic Patent Application Fee Transmittal

Application Number:	
Filing Date:	
Title of Invention:	METHOD AND APPARATUS FOR MAGNETIC INDUCTION THERAPY
First Named Inventor/Applicant Name:	Daniel Rogers BURNETT
Filer:	Laura Lan Shires
Attorney Docket Number:	EMKNNZ00301

Filed as Small Entity

Utility under 35 USC 111(a) Filing Fees

Description	Fee Code	Quantity	Amount	Sub-Total in USD($)
Basic Filing:				
Utility filing Fee (Electronic filing)	4011	1	82	82
Utility Search Fee	2111	1	270	270
Utility Examination Fee	2311	1	110	110
Pages:				
Claims:				
Claims in excess of 20	2202	34	26	884
Independent claims in excess of 3	2201	4	110	440
Miscellaneous-Filing:				

Description	Fee Code	Quantity	Amount	Sub-Total in USD($)
Petition:				
Patent-Appeals-and-Interference:				
Post-Allowance-and-Post-Issuance:				
Extension-of-Time:				
Miscellaneous:				
			Total in USD ($)	**1786**

Electronic Acknowledgement Receipt

EFS ID:	5761524
Application Number:	12508529
International Application Number:	
Confirmation Number:	8186
Title of Invention:	METHOD AND APPARATUS FOR MAGNETIC INDUCTION THERAPY
First Named Inventor/Applicant Name:	Daniel Rogers BURNETT
Customer Number:	40518
Filer:	Laura Lan Shires
Filer Authorized By:	
Attorney Docket Number:	EMKNNZ00301
Receipt Date:	23-JUL-2009
Filing Date:	
Time Stamp:	21:05:02
Application Type:	Utility under 35 USC 111(a)

Payment information:

Submitted with Payment	yes
Payment Type	Credit Card
Payment was successfully received in RAM	$1786
RAM confirmation Number	5525
Deposit Account	
Authorized User	

File Listing:

Document Number	Document Description	File Name	File Size(Bytes)/ Message Digest	Multi Part /.zip	Pages (if appl.)

1	Application Data Sheet	EMKNNZ00301_20090723_ads_efs.pdf	967298 e4c5102ea8abcc3c469477bad679c4b88ac62d18	no	5
Warnings:					
Information:					
2		EMKNNZ00301_20090723_specification.pdf	12327563 3513e7dc03f0087c88577dd00d155d8cc848bf88	yes	50
	Multipart Description/PDF files in .zip description				
	Document Description		**Start**	**End**	
	Specification		1	43	
	Claims		44	49	
	Abstract		50	50	
Warnings:					
Information:					
3	Drawings-only black and white line drawings	EMKNNZ00301_20090723_drawings.pdf	3161037 3b44be2bcc999c645373c6e9a9571792002fb2fc	no	24
Warnings:					
Information:					
4	Fee Worksheet (PTO-875)	fee-info.pdf	38059 a54b85bb54ac2d093dd38beb03a1fbd5a199a04a	no	2
Warnings:					
Information:					
			Total Files Size (in bytes):	16493957	

This Acknowledgement Receipt evidences receipt on the noted date by the USPTO of the indicated documents, characterized by the applicant, and including page counts, where applicable. It serves as evidence of receipt similar to a Post Card, as described in MPEP 503.

New Applications Under 35 U.S.C. 111
If a new application is being filed and the application includes the necessary components for a filing date (see 37 CFR 1.53(b)-(d) and MPEP 506), a Filing Receipt (37 CFR 1.54) will be issued in due course and the date shown on this Acknowledgement Receipt will establish the filing date of the application.

National Stage of an International Application under 35 U.S.C. 371
If a timely submission to enter the national stage of an international application is compliant with the conditions of 35 U.S.C. 371 and other applicable requirements a Form PCT/DO/EO/903 indicating acceptance of the application as a national stage submission under 35 U.S.C. 371 will be issued in addition to the Filing Receipt, in due course.

New International Application Filed with the USPTO as a Receiving Office
If a new international application is being filed and the international application includes the necessary components for an international filing date (see PCT Article 11 and MPEP 1810), a Notification of the International Application Number and of the International Filing Date (Form PCT/RO/105) will be issued in due course, subject to prescriptions concerning national security, and the date shown on this Acknowledgement Receipt will establish the international filing date of the application.

SCORE Placeholder Sheet for IFW Content

Application Number: 12508529 Document Date: 7/23/2009

The presence of this form in the IFW record indicates that the following document type was received in electronic format on the date identified above. This content is stored in the SCORE database.

- Drawings – Other than Black and White Line Drawings

Since this was an electronic submission, there is no physical artifact folder, no artifact folder is recorded in PALM, and no paper documents or physical media exist. The TIFF images in the IFW record were created from the original documents that are stored in SCORE.

To access the documents in the SCORE database, refer to instructions developed by SIRA.

At the time of document entry (noted above):

- Examiners may access SCORE content via the eDAN interface.
- Other USPTO employees can bookmark the current SCORE URL (http://es/ScoreAccessWeb/).
- External customers may access SCORE content via the Public and Private PAIR interfaces.

Form Revision Date: February 8, 2006

METHOD AND APPARATUS FOR MAGNETIC INDUCTION THERAPY

CROSS-REFERENCE TO RELATED APPLICATIONS

[0001] The present application is a continuation-in-part of U.S. Patent Application Serial No. 11/866,329 filed October 2, 2007, which claims priority to U.S. Provisional Patent Application Serial No. 60/848,720 filed October 2, 2006, each of which is incorporated herein by reference in its entirety.

BACKGROUND

[0002] Overactive bladder ("OAB") and urinary incontinence ("UI") affect over 16% of the American population each year, or approximately 34 million men and women. Outside of the United States, OAB and UI affects over 46 million Europeans. The economic cost of OAB and UI is estimated to be in excess of $12 billion a year in the United States alone.

[0003] Due to the social stigmas attached to OAB and UI and to misunderstandings related to the symptoms associated with OAB and UI, only 40% of the affected individuals in the United States seek medical treatment. Of those 13.6 million Americans seeking medical treatment, nearly 30% or 4 million individuals are reportedly unsatisfied with their current therapy.

[0004] Known treatments for OAB and UI include exercise and behavioral modifications, pharmacological therapies, surgical intervention and neuromodulation, but each of these treatments exhibits severe limitations.

[0005] Exercise and behavioral modifications often require patients to adhere to stringent routines, including scheduled voiding, maintenance of a bladder diary, and intense exercise regimens. While this type of treatment may be a viable option for a small group of highly dedicated individuals, its daily impact on a person's life makes it unattractive for most patients.

[0006] Pharmacological intervention is the most widely prescribed therapy for OAB and UI. Unfortunately, patients often suffer from side effects related to their drug therapies. Such side effects are sometimes serious and are particularly pronounced in elderly patient populations that tend to use a plurality of medications. In addition, approximately 30% of all patients subjected to pharmacological therapies appear to be dissatisfied with the efficacy of their prescribed treatments.

[0007] Surgical intervention IS extremely invasive and often results in a long-term requirement for catheterization that may become permanent in some instances. The negative impact of these procedures on the patient's quality of life and their high expense make surgical intervention a recommended option only when all other treatment options have been exhausted.

[0008] Neuromodulation is another available therapy for OAB and UI. In general, pulsed electromagnetic stimulation ("PES") has proven to have beneficial effects in a variety of medical applications. The related scientific principle is that an electric current passing through a coil generates an electromagnetic field, which induces a current within a conductive material placed inside the electromagnetic field.

[0009] More particularly, PES has been shown to be an effective method of stimulating a nerve positioned within the electromagnetic field, thereby affecting a muscle controlled by that nerve. For example, in the paper titled "Contactless Nerve Stimulation and Signal Detection by Inductive Transducer" presented at the 1969 Symposium on Application of Magnetism in Bioengineering, Maass et al. disclosed that a nerve threading the lumen of a toroid could be stimulated by a magnetic field of 0.7 Volt peak amplitude and a 50 μs duration in a monitor wire, and that such stimulation could generate a contraction of major leg muscles in anesthetized mammals.

[0010] Various attempts were made in the prior art to use PES for treating a variety of ailments. For example, U.S. Patent No. 4,548,208 to Niemi discloses an apparatus for inducing bone growth by generating an electric current in the body through the external application of an electromagnetic field. Such apparatus includes opposing clamps disposed on a limb and may optionally include feedback coils and a microprocessor for sensing the magnetic field, so to avoid an overcurrent mode. Therefore, this apparatus optimizes the magnetic field on the basis of measurements of the generated magnetic field.

[0011] U.S. Patent No. 4,940,453 to Cadwell discloses a method and apparatus for magnetically stimulating the neural pathways of a higher level organism. In this invention, a sinusoidally fluctuating current flow is created through a coil that overlies neurons to be stimulated, and frequency of the current flow and frequency of the magnetic field produced by the coil predetermined to correspond to the time constant of the neurons to be stimulated. Sensors for sensing coil conditions, such as coil temperature, may also be included.

[0012] U.S. Patent No. 5,000,178 to Griffith discloses an electrical to electromagnetic transducer for applying electromagnetic energy to damaged parts of a living body by directing electromagnetic radiation to a certain damaged body part. Electromagnetic radiation is initially generated by a dipole consisting of a bar of high permeability material wrapped with an electrically conductive coil. Magnetic fields, which are generated away from the damaged body part, intersect a conductive shield and establish eddy currents, which in turn generate magnetic fields opposite and nearly equal to the magnetic fields generated by the electromagnetic source. The resultant

electromagnetic fields reinforce the electromagnetic field directed towards the damaged body part and diminish the electromagnetic field directed away from the damaged body part.

[0013] U.S. Patent No. 5,014,699 to Pollack et al. discloses a non-invasive, portable electromagnetic therapeutic method and apparatus for promoting the healing of damaged or diseased living tissue, including fractured bone. These method and apparatus involve generating a signal that has a series of substantially symmetric voltage cycles of bursted pulses with narrow pulse widths of 0.5 to 20 microseconds, and further involve converting the signal into an electromagnetic field extending into an area that contains tissue to be healed. This invention provides for no feedback on the efficiency of the applied stimulation.

[0014] In a paper titled "Selective Stimulation and Blocking of Sacral Nerves: Research Setup and Preliminary Results," published in Annual International Conference of the IEEE Engineering in Medicine and Biology Society, Vol. 13, No.2, 1991, Wijkstrda et al. used an external pulsed magnetic coil to stimulate a peripheral nerve for the treatment of urinary incontinence. The authors used a large magnetic field produced by a single coil to ensure that the nerve was fired and the resulting nerve conduction was frequently painful or intolerable. In addition, coil alignment was problematic because an internally implanted coil was utilized, which had to be aligned with the fully external magnetic field to stimulate the nerve. Due to the difficulty in positioning the device, the practical application of this therapy does not permit home healthcare usage without a preset alignment and monitoring of the nerve, and no provision was made to insure that the nerve was actually being stimulated or to adjust the device in response to commonly occurring physiologic and anatomic variations in nerve locations.

[0015] U.S. Patent Nos. 5,181,902 Erickson et al. and 5,314,401 to Tepper disclose pulsed electromagnetic field ("PEMF") transducer systems usable to perform PEMF therapies (such as after spinal fusion) by generating flux-aided electromagnetic fields. The drive electronics includes a PEMF processor that executes a PEMF program for controlling the activation of the electromagnetic fields (field strength and cycle).

[0016] In a paper titled: "Magnetic Stimulation of the Bladder in Dogs" presented at the 1993 AAEM Annual Meeting, the abstract of which was published in the Muscle & Nerve issue of October 1993, Lin et al. disclosed that magnetic stimulation could be employed to stimulate the cortex, spinal nerves and peripheral nerves of dogs through direct trans-abdominal stimulation of the detrusor muscles or through stimulation of the lumbosacral roots.

[0017] As shown, the prior art makes no provision to measure the efficacy of PES treatment, causing patients to be treated improperly, either by an insufficient or excessive exposure to PES. Other attempts to monitor PES dosage in the prior art exhibit serious drawbacks. For

example, U.S. Patent No. 5,518,495 to Kot discloses an apparatus for the treatment of arthritis utilizing a magnetic field therapy, which includes an adjustable voltage source that is connected to a source of line voltage and a coil connected to the adjustable voltage source. This apparatus has no feedback system to advise a healthcare provider of the efficiency of the treatment.

[0018] U.S. Patent No. 5,984,854 to Ishikawa et al. discloses a method for treating urinary incontinence based on delivering a train of current pulses through one or more magnetic stimulation coils so to induce a train of magnetic flux pulses, which then induce an eddy current within the body and stimulates a group of pelvic floor muscles, the pudendal nerve, the external urethral sphincter, or the tibial nerve. While this method includes the use of pulsed electromagnetic for treating urinary incontinence, no specific components are envisioned to facilitate the placement of the magnetic coils over a targeted region of the body or a system for monitoring the efficiency of the therapy being applied.

[0019] U.S. Patent No. 6,086,525 to Davey et al. discloses a magnetic nerve stimulator that includes a core constructed from a material having a high field saturation having a coil winding disposed thereon. A thyrister capacitive discharge circuit pulses the device, and a rapidly changing magnetic field is guided by the core, preferably made from vanadium permendur.

[0020] U.S. Patent No. 6,701,185 to Burnett et al. also discloses an electromagnetic stimulation device that includes a plurality of overlapping coils, which can be independently energized in a predetermined sequence such that each coil will generate its own independent electromagnetic field and significantly increase the adjacent field. Unfortunately, none of these patents provides a system for monitoring the efficiency of the therapy in progress, either with respect to the proper positioning of the winding over the area to be treated or of the intensity of the magnetic field to be applied.

[0021] Other PES therapies require the implantation of devices into the patient, with the consequent discomfort, risk and cost to the patient. For example, U.S. Patent No. 6,735,474 to Loeb et al. discloses a method and system for treating UI and/or pelvic pain by injecting or laparoscopically implanting one or more battery-or radio frequency-powered microstimulators that include electrodes placed beneath the skin of the perineum and/or adjacent the tibial nerve.

[0022] U.S. Patent 6,941,171 to Mann et al. describes a method and a system for treating incontinence, urgency, frequency, and/or pelvic pain that includes implantation of electrodes on a lead or a discharge portion of a catheter adjacent the perineal nerve(s) or tissue(s) to be stimulated. Stimulation pulses, either electrical or drug infusion pulses, are supplied by a stimulator implanted remotely through the lead or catheter, which is tunneled subcutaneously between the stimulator and stimulation site.

[0023] Other PES therapies in the prior art involve the use of electrodes placed on or beneath the skin of a patient. Recent data on invasive, needle-based PES of the posterior tibial nerve in individuals with OAB and UI indicates that PES can modulate bladder dysfunction through its action on the pudendal nerve and the sacral plexus, which provide the major excitatory input to the bladder.

[0024] In a paper titled "Percutaneous Tibial Nerve Stimulation via Urgent® PC Neuromodulation System -An Emerging Technology for managing Overactive Bladder," which was published in Business Briefing: Global Surgery 2004, CystoMedix, Inc. disclosed that peripheral tibial nerve stimulation ("PTNS") had been found effective in treating OAB. The disclosed procedure involved the use of electrode and generator components, including a small 34-gauge needle electrode, lead wires and a hand-held electrical generator. However, the procedure requires the permanent implantation of an electrical stimulation device in the patient. One estimate put the cost of treatment at nearly $14,000 with additional routine care costs of $593 per patient per year. Additionally, risks of battery failure, implant infection, and electrode migration led to a high re-operation rate and made this procedure unattractive.

[0025] U.S. Patent No. 7,117,034 to Kronberg discloses a method for generating an electrical signal for use in biomedical applications that includes two timing-interval generators. In this invention, skin-contact electrodes may be placed over an area of interest and a microprocessor may direct timing and sequencing functions, although such timing and sequencing functions are not related to the actual efficacy of the treatment while treatment is being performed.

[0026] U.S. Patent Application Publication No. 2005/0171576 to Williams et al. discloses an electro-nerve stimulation apparatus that includes a pulse generator, a first electrically conductive, insulated lead wire, a second electrically conductive, insulated lead wire, an electrically conductive transcutaneous electrode and an electrically conductive percutaneous needle electrode. Connected to one end of the first and second lead wires is a connector for electrically coupling with the pulse generator. In this invention, a percutaneous needle electrode is inserted through the skin in proximity to the desired internal stimulation site and electric stimulation is employed, rather than pulsed electromagnetic stimulation. Moreover, the Williams invention does not contemplate mechanisms for facilitating use of the device by an untrained user, nor a monitoring of the applied therapy.

[0027] A neuromodulation alternative is a posterior tibial nerve stimulator, often referred to as SANS, but as is the case with other forms of neuromodulation, this procedure is invasive in nature and requires the insertion of a needle five centimeters into the patient's ankle region to stimulate the posterior tibial nerve. This procedure also requires a minimum of twelve sessions for initial treatment, possibly with additional sessions required for maintenance.

[0028] Also, therapies involving the use of traditional insertable or implantable percutaneous needles require penetration into deeper tissues and carry with them the added risk of infection, while causing pain and discomfort to the patient. This often results in ineffective treatment and or reduced patient compliance.

SUMMARY

[0029] In certain embodiments, apparatus and methods for magnetic induction therapy, in which dosage of magnetic energy can be regulated according to conduction in a target nerve exposed to the magnetic field are provided.

[0030] In certain embodiments, apparatus and methods for magnetic induction therapy, in which the flow of magnetic energy can be adjusted directionally by the patient or a healthcare provider without altering the position of a housing containing conductive coils that produce the magnetic field are provided.

[0031] In certain embodiments, apparatus and methods for treating a variety of ailments by providing energy to a target nerve, for example magnetic energy, electrical energy or ultrasound energy, at a location and in an amount optimized by detecting conduction in the target nerve are provided.

[0032] In certain embodiments, an energy emitting apparatus for delivering a medical therapy that includes one or more energy generators, a logic controller electrically connected to the one or more energy generators, and one or more sensors for detecting electric conduction in a target nerve, which are connected to the logic controller is provided. The one or more energy generators produce energy focused on the target nerve upon receiving a signal from the logic controller, and the applied energy is varied by the logic controller according to an input provided by the one or more sensors based on electric conduction in the target nerve. The feedback provided by the sensors to the logic controller about the efficacy of the applied treatment causes the logic controller to modulate the current transmitted to the coils.

[0033] The applied energy may be a magnetic field, an electrical field, an ultrasound, a visible light, or an infrared or an ultraviolet energy. When a magnetic field is applied, the energy-emitting device is an apparatus that provides a magnetic induction therapy and that includes one or more conductive coils disposed in an ergonomic housing. A logic controller is electrically connected to the one or more coils, and one or more sensors detect electric conduction in the target nerve and are connected to the logic controller so to provide a feedback to the logic controller. The conductive coils receive an electric current from the logic controller and produce a magnetic field focused on a target nerve, and the electric current fed by the logic controller is varied by the logic controller

according to an input provided by the sensors, thereby causing amplitude, frequency or direction of the magnetic field, or the firing sequence of the one or more coils, to be varied according to the efficiency of the treatment provided to the target nerve. In certain embodiments, the housing containing the conductive coils may be a flexible wrap, a cradle or a garment, and the coils may be overlapping and/or be disposed in different positions within the housing, so to generate a magnetic field on different body parts with the desired direction and amplitude.

[0034] The one or more coils may be stationary or movable within the housing, making it possible to optimize the direction of magnetic flow to the target nerve by disposing the coils in the most effective direction. In different embodiments, the coils may be movable manually by acting on a knob, lever, or similar type of actuator, or may be translated automatically by the logic controller in response to the input provided by the sensors. When a preferred position for the coils has been established, the coils may be locked in position and maintain that position during successive therapy sessions. In other embodiments, the sensors may be incorporated within the housing, or instead may be disposed on a body part of interest independently of the housing.

[0035] In still other embodiments, the inductive coils are disposed in a housing that is situated externally to a patient's body, and additional inductive coils are implanted into the body of the patient and are magnetically coupled to the external inductive coils. With this coil arrangement, energy may be transmitted from the external coils to the internal coils either to recharge or to activate an implantable device. In yet other embodiments, the electric current may varied by the logic controller both on the basis of an input provided by the one or more sensors and also an input provided by the patient according to a muscular response she has perceived, for example, the twitching of a toe after application of the magnetic field.

[0036] In yet other embodiments, the source of energy for nerve stimulation may be electrical energy and nerve conduction may be detected at a site sufficiently distant from the site of stimulation, so to enable detection of nerve conduction despite the confounding interference from the direct electrical stimuli. In these embodiments, direct electrical stimulation of nerve and muscle may be tailored to provide optimal therapy and, in the case of electrode migration or other electrode malfunction, to report lack of stimulation of the bodily tissues. Furthermore, these embodiments enable a reduction in power requirement, because control of the signal is provided by the sensor to the signal generator loop.

[0037] In other embodiments, an energy emitting system for providing a medical therapy is provided. The system may include one or more conductive coils disposed within or along a housing and configured to generate a magnetic field focused on a target nerve in proximity to coils; one or more sensors in the form of microneedle patch configured to detect electrical conduction in the target

nerve; and a controller coupled to the conductive coils and optionally in communication with the sensor.

[0038] In other embodiments, an energy emitting system for providing a medical therapy is provided. The system may include one or more microneedle patches having one or more microneedle arrays deposited on a surface of one or more electrodes and configured to generate or deliver an electrical or magnetic stimulus or field focused on a target nerve in proximity to the microneedle patch; one or more sensors configured to detect electrical conduction in the target nerve; and a controller coupled to the conductive coils and optionally in communication with the sensor. Optionally, the above embodiments may incorporate an electrode needle. Optionally, the above embodiments or systems may be utilized without a sensor or mechanism for detecting conduction or stimulation.

[0039] Methods of use of the above apparatus, systems and variations thereof for treating various conditions are also described herein.

[0040] Other features and advantages will appear hereinafter. The features and elements described herein can be used separately or together, or in various combinations of one or more of them.

BRIEF DESCRIPTION OF THE DRAWINGS

[0041] The drawings constitute a part of this specification and include exemplary embodiments of the invention, which may be embodied in various forms. It is to be understood that in some instances various aspects of the embodiments may be shown exaggerated or enlarged to facilitate an understanding of the embodiments.

[0042] FIG. 1 is a schematic view of an apparatus for magnetic induction therapy according to a first embodiment of the invention.

[0043] FIG. 2 is a schematic view of an apparatus for magnetic induction therapy according to a second embodiment of the invention.

[0044] FIG. 3 is a schematic view of an apparatus for magnetic induction therapy according to a third embodiment of the invention.

[0045] FIG. 4 is a schematic view of an apparatus for magnetic induction therapy according to a fourth embodiment of the invention.

[0046] FIG. 5 is a schematic view of an apparatus for magnetic induction therapy according to a fifth embodiment of the invention.

[0047] FIGS. 6A-6D are schematic illustrations depicting a first method of use of an apparatus for magnetic induction therapy. This method is based on adjusting the position of the conductive coils so to optimize a magnetic flow applied to a target nerve.

[0048] FIGS. 7A-7D are schematic illustrations of a second method of use of an apparatus for magnetic induction therapy. This method is based on locking the conductive coils in position once electrical conduction in a target nerve has been detected.

[0049] FIG. 8 is a schematic view of an embodiment of the invention that includes a plurality of sensors.

[0050] FIGS. 9A-9D are schematic representations of different garments adapted to operate as apparatus for magnetic induction therapy according to the principles of the present invention.

[0051] FIGS. 10 is a schematic view of an apparatus for providing electrical stimulation.

[0052] FIG. 11 is a schematic view of another embodiment of an apparatus for providing electrical stimulation.

[0053] FIG. 12 shows a schematic view of an energy emitting system including a microneedle patch sensor.

[0054] FIG. 13-15 shows magnified bottom views of various embodiments of microneedle patches.

[0055] FIGS. 16-17 shows magnified side views of various embodiments of a microneedle patch.

[0056] FIG. 18 shows a magnified bottom perspective view of a microneedle patch.

[0057] FIG. 19 shows a representative cross sectional view of the skin composed of an outer stratum corneum covering the epidermal and dermal layers of skin and the underlying subcutaneous tissue, with a variation of a microneedle patch attached thereto.

[0058] FIG. 20 shows a magnified side view of a variation of a microneedle patch including multiple electrodes.

[0059] FIG. 21 shows a schematic view of an energy emitting system including a microneedle patch sensor placed behind a subject's knee.

[0060] FIGS. 22-23 show schematic views of energy emitting systems including an electrode needle and sensor.

[0061] FIGS. 24-25 show schematic views of energy emitting systems including an electrode needle without a sensor.

[0062] FIG. 26 shows a schematic view of an energy emitting system including a microneedle patch for providing stimulation.

[0063] FIGS. 27-28 show schematic views of energy emitting systems including an electrode needle and microneedle patch for providing stimulation.

[0064] FIG. 29a-29d show a prospective, side, top and rear views of an energy emitting device in the form of a foot cradle.

[0065] FIGS 30-31 show schematic views of an energy emitting device in the form of a knee cradle.

DETAILED DESCRIPTION OF EMBODIMENTS OF THE INVENTION

[0066] Detailed descriptions of embodiments of the invention are provided herein. It is to be understood, however, that the present invention may be embodied in various forms. Therefore, the specific details disclosed herein are not to be interpreted as limiting, but rather as a representative basis for teaching one skilled in the art how to employ the present invention in virtually any detailed system, structure, or manner.

[0067] Various embodiments of the invention will now be described. The following description provides specific details for a thorough understanding and enabling description of these embodiments. One skilled in the art will understand, however, that the embodiments may be practiced without many of these details. Additionally, some well-known structures or functions may not be shown or described in detail so as to avoid unnecessarily obscuring the relevant description of the various embodiments.

[0068] The terminology used in the description presented below is intended to be interpreted in its broadest reasonable manner, even though it is being used in conjunction with a detailed description of certain specific embodiments of the invention. Certain terms may even be emphasized below. Any terminology intended to be interpreted in any restricted manner, however, will be overtly and specifically defined as such in this detailed description section.

[0069] Where the context permits, singular or plural terms may also include the plural or singular term, respectively. Moreover, unless the word "or" is expressly limited to mean only a single item exclusive from the other items in a list of two or more items, then the use of "or" in such a list is to be interpreted as including (a) any single item in the list, (b) all of the items in the list, or (c) any combination of items in the list.

[0070] Referring first to FIG. 1, a first embodiment of the invention includes a coil wrap 20, which is depicted as disposed over ankle 22 circumferentially to surround a portion of tibial nerve 24. Because tibial nerve 24 is targeted, this embodiment is particularly suited for the treatment of OAB and VI. In other embodiments of the invention, coil wrap 20 may be configured to surround other body parts that contain a portion of tibial nerve 24 or of other nerves branching from or

connected to tibial nerve 24, still making these embodiments suitable for treating OAB and VI. In still other embodiments of the invention, coil wrap 20 may be configured for surrounding body parts that contain other nerves when treatments of other ailments are intended.

[0071] Coil wrap 20 may be manufactured from a variety of materials suitable for wearing over ankle 22. Preferably, coil wrap is produced from a soft, body-compatible material, natural or synthetic, for example, cotton, wool, polyester, rayon, Gore-Tex®, or other fibers or materials known to a person skilled in the art as non-irritating and preferably breathable when tailored into a garment. Coil wrap 22 may even be manufactured from a molded or cast synthetic material, such as a urethane gel, to add extra comfort to the patient by providing a soft and drapable feel. Additionally, coil wrap 20 may be produced from a single layer of material or from multiple material layers and may include padding or other filling between the layers.

[0072] Coil wrap 20 contains one or more conductive coils 26 arranged to produce a pulsed magnetic field that will flow across tibial nerve 24 and generate a current that will flow along tibial nerve 24 and spread along the length of tibial nerve 24 all the way to its sacral or pudendal nerve root origins. Coils 26 may be a single coil shaped in a simple helical pattern or as a figure eight coil, a four leaf clover coil, a Helmholtz coil, a modified Helmholtz coil, or may be shaped as a combination of the aforementioned coils patterns. Additionally, other coil designs beyond those mentioned hereinabove might be utilized as long as a magnetic field is developed that will encompass tibial nerve 24 or any other target nerve. When a plurality of coils is utilized, such coils may be disposed on a single side of ankle 22, or may be disposed on more than one side, for example, on opposing sides, strengthening and directionalizing the flow of the magnetic field through tibial nerve 24 or other peripheral nerves of interest.

[0073] Coil wrap 20 is preferably configured as an ergonomic wrap, for example, as an essentially cylindrical band that can be pulled over ankle 22, or as an open band that can be wrapped around ankle 22 and have its ends connected with a buckle, a hoop and loop system, or any other closing system known to a person skilled in the art. By properly adjusting the position of coil wrap 20 over ankle 22, a patient or a health care provider may optimize the flow of the magnetic field through tibial nerve 24, based on system feedback or on sensory perceptions of the patient, as described in greater detail below.

[0074] The electric current that produces the magnetic field by flowing through coils 26 is supplied by a programmable logic controller 28, which is connected to coils 26, for example, with a power cord 32. A sensor 30 that feeds information to logic controller 28 is also provided, in order to tailor the strength of the magnetic field and control activation of coils 26 based on nerve conduction. The purpose of sensor 30 is to detect and record the firing of the target nerve and to provide related

information to logic controller 28, so to render the intended therapy most effective. For example, sensor input may cause logic controller 28 to alter the strength or pulse amplitude of the magnetic field based on sensor input, or fire the coils in a certain sequence.

[0075] In this embodiment, as well as in the other embodiments described hereinafter, sensor 30 may include one or more sensor patches and may be placed at different distances from the region of direct exposure to the magnetic field. For example, sensor 30 may be configured as a voltage or current detector in the form of an EKG patch and may be placed anywhere in the vicinity of the target nerve to detect its activation. For ease of description, the term "coils" will be used hereinafter to indicate "one or more coils" and "sensor" to indicate "one or more sensors," unless specified otherwise.

[0076] By virtue of the above described arrangement, coil wrap 20 provides a reproducibly correct level of stimulation during an initial therapy session and during successive therapy sessions, because the presence or absence of nerve conduction is detected and, in some embodiments, measured when coil wrap 20 is first fitted and fine-tuned on the patient. In addition to properly modulating the applied magnetic field, the positioning of coils 26 over ankle 22 may also be tailored according to the input provided by sensor 30, so to fine-tune the direction of the magnetic field. Such an adjustment of the direction, amplitude, and level of the stimulation provided to the target nerve through the above described automated feedback loop, to ensure that peripheral nerve conduction is being achieved, is one of the key features.

[0077] If the magnetic pulse does not substantially interfere with sensor 30, sensor 30 may be placed directly within the field of stimulation, so that power supplied to the system may be conserved. This is particularly important for battery-powered systems. Alternatively, sensor 30 may also be placed at a distance from the magnetic field and still properly detect neural stimulation.

[0078] In a method of use of coil wrap 20, the amplitude and/or firing sequence of coils 26 may be ramped up progressively, so that the magnetic field is increased in strength and/or breadth until nerve conduction is detected, after which the applied stimulus is adjusted or maintained at its current level for the remainder of the therapy. The level of stimulation may be also controlled through a combination of feedback from sensor 30 and feedback based on perceptions of the patient. For example, the patient may activate a switch once she perceives an excessive stimulation, in particular, an excessive level of muscular stimulation. In one instance, the patient may be asked to push a button or turn a knob when she feels her toe twitching or when she experiences paresthesia over the sole of her foot. The patient will then continue pressing the button or keep the knob in the rotated position until she can no longer feel her toe twitching or paresthesia in her foot, indicating that that level of applied stimulation corresponds to an optimal therapy level. From that point on, the

patient may be instructed to simply retain her foot, knee, or other limb within coil wrap 20 until therapy has been terminated while the system is kept at the optimal level. Adding patient input enables control of coil wrap 20 during outpatient treatments, because the patient is now able to adjust the intensity of the magnetic field herself beyond the signals provided to logic controller 28 by sensor 30.

[0079] Detecting and, if the case, measuring conduction in one or more nerves along the conduction pathways of the stimulated nerve confirms that the target nerve has been stimulated, providing an accurate assessment of the efficiency of the applied therapy on the patient. A concomitant detection of muscle contraction may also confirm that the target nerve is being stimulated and provide an indication to the patient or to a healthcare provider as to whether stimulation has been applied at an excessive level in view of the anatomical and physiological characteristics of the patient.

[0080] Based on the foregoing, coil wrap 20 allows for a consistent, user-friendly targeting and modulation of the peripheral nerves via the posterior tibial nerve on an outpatient basis, in particular, the targeting and modulation of the pudendal nerve and of the sacral plexus. When multiple coils 26 are present, coils 26 may be activated simultaneously or differentially to generate the desired magnetic field. The direction and location of each of coils 26 may be reversibly or irreversibly adjusted by the healthcare provider or by the patient, customizing the location of the applied stimulation to the anatomy and therapy needs of each patient. After a healthcare provider has optimized position and firing sequence for each of coils 26, the patient may be sent home with coil wrap 20 adjusted to consistently target the desired nerve. In one variant of the present embodiment, an automatic feedback system adjusts one or more of firing sequence, firing strength or position of coils 26 within coil wrap 20 during the initial setup and also during successive therapy sessions.

[0081] In summary, certain embodiments include the creation of a loop consisting of feeding information on nerve conduction to logic controller 28 and on logic controller 28 tailoring the electrical current sent to coil wrap 20 according to the information received from sensor 26 based on whether or not the nerve is receiving the desired stimulation and, in some embodiments, the desired amount of stimulation. This arrangement offers an unparalleled level of therapy control and flexibility within a home care setting, because a consistent, repeatable stimulation of the target nerve can be attained. Aside from adjusting the position of coils 26 in accordance with the patient's anatomy and physiological variations, controlling pulse amplitude is also of great importance even during different therapy sessions with the same patient. For example, a patient with leg edema will encounter difficulties in properly adjusting coil wrap 20 based on whether her legs and ankles are swollen or not swollen, and the power required to penetrate to posterior tibial nerve 24 (in the case of

a VI therapy) will vary greatly due to the variable depth of the nerve. Thus, having feedback provided by sensor 26 becomes a necessity for achieving an accurate dosage of the treatment rather than an option. Benchtop testing has demonstrated that a system constructed according to the present invention is capable of non-invasively generating electrical currents similar to those found in therapeutic electro-stimulation and to do so in different settings.

[0082] Referring now to FIG. 2, a second embodiment of the invention will be described with reference to a coil wrap 34 disposed over ankle 36 for the purpose of treating VI by targeting tibial nerve 38. In this second embodiment, one or more Helmholtz coils 40 are disposed within coil wrap 34 to create a more narrowly directed magnetic field over tibial nerve 38. Like in the all other embodiments described herein, more than one coil (in the present embodiment, more than one Helmholtz coil 40) may be placed within coil wrap 34 and be disposed in different positions within coil wrap 34, in order to optimize magnetic flux over tibial nerve. For example, two Helmholtz coils may be disposed one opposite to the other within coil wrap 34.

[0083] Having coil windings arranged along a common longitudinal axis, as required in a Helmholtz coil configuration, generates a more focused magnetic field and a more accurate targeting of tibial nerve 38 or of any other nerve. Like in the previous embodiment, the operation of coils 40 is controlled by a logic controller 42, which is in turn connected to sensor 44 that monitors conduction in tibial nerve 44 and that generates a feedback to logic controller 42 about the efficiency of the therapy in progress. Therefore, like in the previous embodiment, the coupling of sensor 44 with logic controller 42 optimizes operation of coil wrap 34 according to results measured at the level of tibial nerve 38. Also like in the previous embodiment, manual adjustments to the parameters of electric current provided by logic controller 42 to Helmholtz coil 40 may also be made manually by the patient or by a healthcare provider, and coil wrap 34 may be structured so that the position of Helmholtz coil 40 within coil wrap 34 is adjusted as desired either manually by the patient or by a healthcare provider, or automatically by logic controller 42.

[0084] Referring now to FIG. 3, a third embodiment of the invention includes a coil wrap 46 configured for wrapping over the popliteal fossa of a patient, in the region of the knee, to stimulate the posterior tibial nerve (not shown). The configuration and structure of coil wrap 46 reflect the body portion covered by coil wrap 46, but the key system components of coil wrap 46, such as the type, number and disposition of the coils (for example, the use of overlapping coils); the connections of the coils with a logic controller; and the use of one or more sensors (also not shown) to detect nerve conduction are all comparable to those in the previously described embodiments.

[0085] Referring now to FIG. 4, a fourth embodiment of the invention includes a footrest or foot cradle 48, which is structured to contain at least a portion of a foot 50. One or more coils 52 are

enclosed within cradle 48, and a sensor 54 is disposed along the pathway of tibial nerve 55, sensing conduction in tibial nerve 55, and is also connected to a logic controller 56. Coils 52, sensor 54 and logic controller 56 may be arranged in different configurations, in the same manner as in the preceding embodiments.

[0086] Cradle 48 may be made from a variety of materials and may be monolithic, or have a hollow or semi-hollow structure to enable the movement of coils 52 within cradle 48, as described in greater detail below. Preferably, cradle 48 has an ergonomically design allowing the ankle and heel of the patient to be retained within cradle 48, in a position that matches the positions of stimulating coils 52 to the area of stimulation. The design of cradle 48 provides for a particularly comfortable delivery of therapy to patients that prefer to remain seated during their therapy, and enables the patient to perform the required therapy within a health care facility, or to take cradle 48 home, typically after an initial session and appropriate training in a health care facility. In that event, the patient will be trained to apply sensor 54 autonomously and to adjust stimulation to a comfortable level.

[0087] FIG. 4 shows coils 52 disposed as overlapping and the use of a single sensor patch 54 positioned proximally to the stimulation site. However, coil 52 may be configured as a single coil, a figure eight coil, a four leaf clover coil, a Helmholtz coil, a modified Helmholtz coil or a any combination of the aforementioned coils, or as any other coil design providing an effective stimulation to the target nerve. In addition, coils 52 may be fired individually, sequentially or simultaneously according to the feedback provided by sensor 54.

[0088] In one variant of this embodiment, sensor 54 may include a conductive electrode patch that provides a feedback to logic controller 56 for adjusting, if necessary, the stimulation parameters of coils 52. Alternatively, sensor 54 may be a sensor patch that is either applied to the skin of the patient or is incorporated within the structure of cradle 48.

[0089] Referring now to FIG. 5, a fifth embodiment of the invention includes a knee rest or knee cradle 58 that contains one or more conductive coils 60, one or more sensors 62 and a logic controller 64. The components of this embodiment are similar to those described with reference to the preceding embodiments, as regards the structure and materials of cradle 58, the nature and disposition of coils 60, the type and operation of sensor 62, and the function and operation of logic controller 64. Cradle 58 is configured to target the popliteal fossa of the patient, thus to target tibial nerve 66. In that respect, the present embodiment is similar to the embodiment illustrated in FIG. 3, but while the embodiment of FIG. 3 is configured as a wrap that may be worn while the patient is standing, the present embodiment is configured as a cradle that is more suited for treatment while the patient is sitting or laying down.

[0090] A method of use of the foot cradle depicted in FIG. 4 is described with reference to FIGS. 6A-6D. During a first step illustrated in FIG. 6A, foot 68 is disposed in cradle 70 that contains one or more conductive coils 72, which are connected to a logic controller (not shown) that manages the flow of electric power to coils 72.

[0091] During a second step illustrated in FIG. 6B, a sensor 74 is disposed on foot 68 or on ankle 76 or on another appropriate portion of the patient's body, in order to detect conductivity in tibial nerve 78 or in another target nerve.

[0092] During a third step illustrated in FIG. 6C, a healthcare provider analyzes conductivity measurements provided by sensor 74 (for example, by reading gauge 77) and first adjusts the positioning of coils 72 until conduction in nerve 78 is detected. For example, the healthcare provider may rotate a knob 80, slide a lever or actuate any other displacement system for coils 72 that is known in the art, so that coils 72 are translated until a magnetic field of the proper amplitude and intensity is applied to cause conduction in nerve 78. The position of coils 72 is then fine-tuned manually until an optimal level of conduction in nerve 78 is attained, and the therapy is continued for a length of time as prescribed by the attending healthcare provider.

[0093] During a fourth, optional step illustrated in FIG. 6D, settings for successive therapy sessions are set, for example by locking knob 80 (in one embodiment, with a pin 81) so that the healthcare provider or the patient repeat the therapy using the predetermined settings. Alternatively, the patient may be trained to adjust the amplitude and/or strength of the applied magnetic field, as each therapy session requires.

[0094] While the present method has been described with regard to foot cradle 70, the same method steps may be envisioned for coil wraps or cradles of different configurations, for example, for the coil wraps and cradles described with reference to the previous figures.

[0095] In an alternative embodiment, the logic controller (not shown) may automatically adjust coil positioning to optimize therapy during the initial and successive sessions. While this set-up may be more difficult to implement, it also provides for an accurate targeting of the target nerve during each therapy session, regardless of alterations in patient positioning or changes to the anatomy of the patient (for example, when a foot is swollen). In this embodiment, the device simply varies the orientation of coils 84 until stimulation has been sensed.

[0096] Further, coils 84 may be translated along a single direction (for example, horizontally) or along a plurality of directions, to provide for the most accurate positioning of coils 84 with respect to the target nerve.

[0097] A second method of use of the foot cradle depicted in FIG. 4 is described now with reference to FIG. 7. While this second method is also described with reference to a foot cradle 82

employing one or more coils 84 that have a reversibly lockable, adjustable orientation, the present method may be equally implemented with a body-worn coil wrap, such as those described with reference to the previous figures, or to other embodiments of the invention. In this method, the patient or the healthcare provider adjusts the positioning of coils 84 to detect conductivity in target nerve 89.

[0098] The position of coils 84 may be translated in different directions (in the illustrated embodiment, may be translated horizontally) and may be locked in an initial position once conduction in nerve 89 is detected by a sensor (for example, sensing patch 86).

[0099] More particularly, FIG. 7A illustrates the initial positioning of foot 88 into cradle 82 and of sensor patch 86 on ankle 90 or other appropriate body part of the patient. After proper positioning of foot 88 is attained, a knob 92 (or other equivalent device) may be employed to adjust the position of coils 84, based on the signals (for example, nerve conduction signals) provided by sensor patch 86, as shown in FIG. 7B.

[0100] With reference to FIG. 7C, after neural conduction is detected, coils 84 are locked in place, and, with further reference to FIG. 7D, foot cradle 82 retains coils 84 locked in position for further use in a home or healthcare office environment. Therefore, in the present method, the patient or a healthcare provider simply adjusts coil position by sliding coils 84 back and along one axis until electric conduction in the target nerve is detected, although adjustments along all three axes may be possible in different variants of the present embodiment.

[0101] Referring now to FIG. 8, a sixth embodiment of the invention relates to the use of multiple sensors. While FIG. 8 depicts an embodiment shaped as a foot cradle 98, it should be understood that the following description also relates to any other design, whether shaped as a cradle or a wrap or otherwise. The plurality of sensors 94 described herein may detect a variety of physiologic changes, including neural impulses, muscular contraction, twitching, etc. that may occur with neural or muscular stimulation.

[0102] One or more of the illustrated sensors 94 may be employed over body regions being stimulated (for example, back, leg, arm, neck, head, torso, etc.) and may be either incorporated within an actual cradle or wrap or, otherwise, be applied separately from the cradle or the wrap.

[0103] Sensors 94 may be structured as disposable, single-use, EKG-type patches that are attached to the body outside of cradle 98 along the nerve conduction pathway and are then connected to the logic controller (not shown) before beginning therapy. This arrangement provides for an intimate body contact of sensors 94 without the risk of infection or other detrimental side effects that may be present with transcutaneous devices. Sensors 94 may be employed both for beginning and for monitoring the stimulation therapy; more specifically, sensors 94 may be employed during the

beginning of the therapy to optimize the strength of the magnetic field and/or to adjust the positioning of coils 96 within the cradle 98. Once therapy has begun, sensors 94 continue to monitor nerve conduction to ensure that the correct level of stimulation is being provided. In the event that for some reason nerve conduction decays during therapy, the logic controller can automatically adjust the magnetic field, ensuring that the appropriate therapy is delivered for the appropriate amount of time.

[0104] One or more of sensors 94 in this embodiment, or any of the embodiments described herein, may take the form of an inductive coil designed to receive impulses from the underlying nerves, so that inductive technologies may be used to both stimulate the nerve or tissues as well as to record the effect of the stimulation on nerves or tissues. Any of sensors 94 may be connected to the logic controller through one or more connection modes, including, but not limited to, wireless signals, wired signals, radio frequencies, Bluetooth, infrared, ultrasound, direct switching of the current circuit, etc., so long as communication between the sensor and the device is effective.

[0105] During implementation of the present method, a healthcare provider may simply elect to use sensors 94 to adjust the device, for example, to lock coils 96 into position, during the first therapy session and not require the use of sensors 94 during each successive therapy session.

[0106] Referring now to FIGS. 9A-9D, there are shown different, non-limiting embodiments of the invention shaped as body worn ergonomic applicator garments. Each of these embodiments is shown with overlapping coils, although coils of any configurations may be used. Each of the wraps of FIGS. 9A-9D corresponds to a coil wrap, into which a body part may be placed. These garments contain one or more sensors (not shown) that provide feedback to a logic controller (also not shown), or sensors may be applied separately from those garments. Systems may also be included for reversibly or irreversibly locking the coils within the applicator.

[0107] More particularly, FIG. 9A illustrates an embodiment, in which coils 100 are embedded in a knee wrap 102 and are connected to a logic controller (not shown) by a connector 104. FIG. 9B instead illustrates an embodiment, in which coils 106 are disposed within an abdominal garment, for example shorts 108 and in which coils 106 are also connected to a logic controller (not shown) by a connector 110. A marking 112 may be added on one side of shorts 108 to indicate wrap orientation. FIG. 9C illustrates a coil wrap shaped like a band 114, in which coils 116 are connected to a logic controller (not shown) by a connector 118. When this embodiment is employed, band 114 may be wrapped around a body portion (for example, an arm) and be retained in place by a system known in the art, for example, a hook and loop system, a strap and buckle system, or simply a hook disposed at one end of band 114 for engaging fabric or other material in another portion of band 114. FIG. 9D illustrates an embodiment shaped as a shoulder strap 120, the length of which may be

adjusted by a buckle 122 and which has coils 124 disposed in one or more points, for example, at the joint between an arm and a shoulder as shown. Each of these embodiments includes one or ore sensors (not shown) that may be coupled to the garment, or that may be applied separately from the garment.

[0108] Other embodiments that are not illustrated include, bur are not limited to: a head worn garment, such as a cap; a neck worn garment, such as a neck brace; and a lower-back garment. Each garment and applicator may also utilize the locking, targeting coil feature described previously, without requiring the use of the any sensing components after a proper positioning of the coils in relation to the target nerve or nerves has been established.

[0109] Still other embodiments of the invention are depicted in FIGS. 10 and 11. In these embodiments, the source of energy for nerve stimulation is electrical energy that is dispensed through a percutaneous stimulator, such as a percutaneous needle 124, or a transcutaneous stimulator, such as an electrode 126. As shown in FIG. 10, an electrical pulse controller 128 is electrically connected both to percutaneous needle 124 and to sensor 134, to provide the desired feedback and modulate the power to percutaneous needle 134. In the embodiment of FIG. 11, electrical pulse controller 130 is connected both to electrode 126 and to sensor 136, and performs a function similar to that of electrical pulse controller 128. With these embodiments, nerve conduction may be detected at a site sufficiently distant from the site of stimulation, so to enable detection of nerve conduction despite the confounding interference from the direct electrical stimuli. Further, direct electrical stimulation of nerve and muscle may be tailored to provide optimal therapy and, in the case of electrode migration or other electrode malfunction, to report lack of stimulation of the bodily tissues. Still further, these embodiments enable a reduction in power requirement, because control of the signal is provided by the sensor to the signal generator loop.

[0110] As shown, a device constructed according to the principles of the present invention provides a targeted and precise stimulation of the posterior tibial nerve, or of other peripheral nerves, in a non-invasive manner by employing an ergonomic wrap or cradle that specifically targets the posterior tibial nerve in a consistent and repeatable manner. For example, in patients with OAB or VI, the novel, reversibly lockable movement of the coils and the use of a logic controller -sensor loop enables the application of a magnetic field that can be varied in location, amplitude and strength according to the amount of stimulation actually induced in one or more target nerves and of the response of the patient to the therapy. An apparatus according to the present invention may deliver any frequency of stimulation, including low frequencies, high frequencies, mid frequencies and ultrahigh frequencies, and overlapping and non-overlapping coils may be used to generate the

desired field, although overlapping or Helmholtz coils are preferred due to their ability to target a broader region and achieve more thorough stimulation.

[0111] Ailments that may be treated through the use of apparatus and methods of the present invention include not only OAB and VI, but also obesity, depression, urinary incontinence, fecal incontinence, hypertension, pain, back pain, restless leg syndrome, Guillain Barre syndrome, quadriplegia, paraplegia, diabetic polyneuropthy, dyskinesias, paresthesias, dental procedure pain, knee osteoarthritis, anesthesia (pain relief during surgery), Alzheimer's disease, angina (chest pain from heart disease), ankylosing spondylitis, back pain, bum pain, cancer pain, chronic pain, dysmenorrhea (painful menstruation), headache, hemiplegia, hemiparesis (paralysis on one side of the body), labor pain, local anesthesia during gallstone lithotripsy, facial pain, trigeminal neuralgia, bruxism (tooth grinding) pain, myofascial pain, pregnancy-related nausea or vomiting, neck and shoulder pain, pain from broken bones, rib fracture or acute trauma, diabetic peripheral neuropathy, phantom limb pain, post-herpetic neuralgia (pain after shingles), postoperative ileus (bowel obstruction), irritable bowel syndrome, postoperative nausea or vomiting, postoperative pain, post-stroke rehabilitation, rheumatoid arthritis, skin ulcers, spinal cord injury, temporomandibular joint pain, detrusor instability, spinal muscular atrophy (in children), pain during hysteroscopy, gastroparesis, chronic obstructive pulmonary disease rehabilitation, carpal tunnel syndrome, soft tissue injury, multiple sclerosis, intermittent claudication, attention-deficit hyperactivity disorder (ADHD), cognitive impairment, knee replacement pain, achalasia, atopic eczema, bursitis, carpal tunnel syndrome, dementia, depression, dry mouth, dystonia, enhanced blood flow in the brain, enhanced blood perfusion of the uterus and placenta, esophageal spasm, fibromyalgia, fracture pain, Guillain-Barre syndrome, hemophilia, herpes, hip pain, interstitial cystitis, irritable bowel syndrome, pruritis, joint pain, labor induction, local anesthesia, menstrual cramps, muscle cramps, muscle spasticity, muscle strain or pain, musculoskeletal trauma, myofascial pain dysfunction syndrome, nerve damage, osteoarthritis, pain medication adjunct, pancreatitis, Raynaud's phenomenon, repetitive strain injuries, sacral pain, schizophrenia, shingles, shoulder subluxation, sickle cell anemia pain, Skin flap ischemia (during plastic surgery), sphincter of Oddi disorders, sports injuries, thrombophlebitis, tinnitus (ringing in the ear), restless legs, tremor, whiplash and neuralgias. In contrast to implantable nerve stimulators, this therapy is completely non-invasive and does not require a major surgery to implant a permanent nerve stimulation device. Moreover, this therapy can be controlled to optimize the level of therapy delivered according to power consumption and nerve stimulation requirements and need not be delivered by a professional healthcare provider.

[0112] In other embodiments of the invention, neural stimulation may be applied as electrical transcutaneous stimulation, for example, by inserting an invasive electrical needle into a

target body part and by modulating stimulation is modulated on the basis of information sent back to the logic controller from the one or more sensors that are used to detect and/or maintain the correct level of stimulation. The transcutaneous electrical stimulation sensor may be placed in the body independently or be incorporated within the wrap and may provide, among other things, feedback as to the quality of the electrical connection to the skin, which is directly related to the burn risk inherently associated with this type of therapy. In fact, these methods of stimulation may not be optimal due to the resulting skin irritation and risk of potential burns, a very serious issue in the large percentage of patients that have neuropathies. Even when patches are applied to monitor transcutaneous stimulation very closely, the patches may still become displaced and allow a burn to occur. Moreover, potentially interfering electrical impulses may develop at the treatment site, creating a noisy environment for the detection of nerve conduction.

[0113] In still other embodiments of the invention, an external coil or coils may be inductively connected to an implanted coil or coils may be utilized. In these embodiments, an ergonomic applicator may be adjusted by the user or by a healthcare provider such to optimize inductive power transmission between the external and implanted coils. One or more sensors may be utilized to provide a feedback that the relative coil positions have been optimized, and the external coil may then be reversibly locked into position within the ergonomic applicator. Two applications of this embodiment relate to the transfer of power to recharge an implantable device, and to the transfer of power to activate an implantable device.

[0114] In the first application, when an implantable rechargeable device is utilized, the external coils may be used for recharging the implanted device by means of inductive fields generated by the external coils. The external coils may include circuitry that determines the amount of resistance encountered by the magnetic field or other electrical properties related to the quality and degree of the magnetic coupling that is being established. Based on this feedback, the position of the external coils may be adjusted manually or automatically to optimize the coupling achieved with during each recharging session. Alternatively, a sensor may be incorporated into the implantable device and may communicate the degree and quality of the magnetic coupling to the external coils and/or the connected circuitry via wireless communication, providing a feedback for the automatic or manual adjustment of the external recharging coils.

[0115] The coils within the ergonomic applicator may be reversibly locked into place for the duration of the recharge session, and the implantable device may also communicate to the external recharging unit that the implantable device has been fully recharged, terminating the recharging session has been completed. By providing for an intermittent recharging of an implanted device, an apparatus according to the present invention enables the implantable device to devote

more power to performing its intended function optimally and with a lesser concern about protecting or extending battery life.

[0116] In the second application, the powering coils may contain circuitry to determine the amount of resistance encountered by the applied magnetic field, or other electrical properties that may reflect the quality and degree of the magnetic coupling that is being achieved. Based on this feedback, the powering coils in the applicator may be adjusted manually or automatically to activate and optimize the coil coupling at the beginning of each therapy session. Alternatively, a sensor may be incorporated into the implantable device and communicate the degree and quality of the magnetic coupling externally via wireless communication, which may in turn provide feedback for the automatic or manual adjustment of the powering coil. In one variant of the present embodiment, the inductive coils may be magnetically coupled to a needle targeting the posterior tibial nerve.

[0117] An exemplary method of use of an apparatus according to the present invention on a patient suffering from VI and/or OAB includes the following steps:

[0118] The patient places a conductive wrap contained within a flexible material over a region of the ankle (or alternatively over the knee) to provide the required pulsed magnetic field. Alternatively, the patient may use an ergonomic foot/leg rest or cradle having embedded coils.

[0119] A sensor (for example, a sensor patch) is placed on the patient's body along the path of the nerve, ideally proximal to the stimulation site to ensure afferent nerve stimulation, and is connected to a logic controller.

[0120] A physician or healthcare provider adjusts the coils in the wrap or cradle until nerve conduction is achieved based on patient and sensor feedback. An optimal position is sought, and the coils may be reversibly locked into position within the conductive wrap or ergonomic cradle and remain in this position during subsequent use.

[0121] During the therapy session, the logic controller provides an electric current to the coils, generating an inductive magnetic field. In one embodiment, this field begins at low amplitude and slowly ramps up until nerve conduction exceeds a threshold level, as signaled by the sensor and possibly by the patient, who may feel motory conduction. Alternatively, one or more coils may also be activated to increase the covered area of stimulation in the event that stimulation does not occur with the initial coil configuration or is inadequate

[0122] The optimal stimulation may be determined in a variety of manners, for example, by measuring exposure to electromagnetic fields capable of generating a square wave electric signal at a frequency of 10-30 Hz at the targeted tissue depth. The square wave configuration of the signal may be generated via Fourier transformation or may be a ramped current generated in any manner.

[0123] The inductive magnetic pulses continue for an appropriate duration of use, for example, for 15-30 minutes. The sensor may remain in place during the entire therapy session to ensure that stimulation occurs consistently and to provide for appropriate corrections if nerve conduction deteriorated. The logic controller may be powered either by a portable power source such as a battery, or by or a fixed power source such as a traditional wall outlet.

[0124] The conductive wrap and/or ergonomic cradle is removed from the body when therapeutic stimulation is not being delivered, typically at the end of the therapy session.

[0125] The conductive wrap and/or ergonomic cradle is reapplied along with the sensor patch (ideally disposable) from time to time as indicated, for example, on a daily basis, and steps 4-8 are repeated.

[0126] The invention described herein may be applied to any body tissues, including nerve, muscle, skin, vasculature, or any other organ or tissue within the human body. Further, the devices and methods described herein may be used to treat any conditions suited for neuromodulation regardless of whether the stimulation source is an electromagnetic field, a direct electric current, a RF field, infrared energy, visible light, ultraviolet light, ultrasound, or other energy dispensing device.

[0127] In other embodiments, as shown in FIG. 12, an energy emitting system 210 for providing a medical therapy includes one or more conductive coils 212 disposed within or along a housing 214, one or more sensors 216 configured to detect electrical conduction in a target nerve or to detect muscle stimulation, and a controller 218 connected or coupled to the conductive coils 212 and optionally in communication with the sensor 216. In certain embodiments (as shown in Fig. 12), the controller 218 can be integral with the housing 214). The coils 212 are configured such that an electrical current generated by the controller 218 is passed through the coils 212 generating a magnetic field which will stimulate a target nerve, e.g., the tibial nerve 220, a muscle or other body part containing a portion of a target nerve, or any nerves branching off of a target nerve, located in proximity to the coils 212. In this particular embodiment, the housing 214 is in the form of a foot cradle, as shown in FIG. 4, however, the housing could also be in the form of a flexible wrap, garment or other design suitable for use with a subject. In various embodiments described herein, sensors may detect voltage or current and may be connected, coupled, wirelessly connected or coupled or otherwise in communication with the housing and/or controller using a variety of methods or techniques known in the art. The sensor may be placed over a muscle to detect muscle stimulation resulting from stimulating the target nerve (as shown in Fig. 12) or over any other portion of the subject's body suitable for detecting conduction of the target nerve.

[0128] Referring to FIG 13 and 16, the sensor may be in the form of a microneedle patch 228, which can be removably attached to the skin surface of a subject. The microneedle patch 228 may include a housing 231, having one or more electrodes 232 and one or more microneedles 235 deposited or arrayed on a surface of the electrode 232, forming one or more microneedle arrays 234. In FIG 13, microneedle patch 228 has the shape of a square, and the microneedles 235 are arrayed on the bottom surface 236 of the electrode 232 in a 16 X 16 configuration. However, as shown in FIGS 14-15, microneedle patches may be designed in a variety of shapes, e.g., round, oval 229, rectangular 230, hexagonal, and a variety of sizes. The microneedles may be arrayed in a variety of arrangements and patterns (e.g., 14 X 14, 12 X 12, etc.) depending on the particular use and needles.

[0129] Additionally, microneedles may be attached, deposited, or arrayed on an electrode surface or patch in a variety of configurations and arrangements, depending on where the particular microneedle patch will be utilized and the treatment to be delivered. The number of microneedles included in an array can vary. For example, the number of microneedles may range from about 5 to 500 or 100 to 400 or about 200 to 300 or about 256. In certain embodiments where microneedles are composed of strong, highly conductive material, the number of microneedles necessary may be less and may range from about 5 to 100 or 10 to 50 or 5 to 50. However, where microneedles are composed of higher resistance metal, a greater number of needles may be needed, e.g., about 100 to 500 or about 200 to 300 or greater than 500.

[0130] Referring to FIG. 18, a magnified view of a microneedle array 234 composed of one or more microneedles 235 is shown. Microneedles 235 may include a base portion 238 and an upper portion 239. Microneedles 235 may have lengths in the range of about 1 to 400 microns or 10 to 400 microns or preferably about 100 to 150 microns, and a diameter in the range of about 1 to 100 microns. A microneedle 235 may be tapered in diameter, going from a larger to smaller diameter from the base portion 238 to the upper portion 239 where the distal tip 240 of the microneedle is preferably pointed or sharp. The upper portion 239 of the microneedle 235 may have a diameter in the range of about 10-30 microns or about 15 to 25 microns. Optionally, for ease of production, the base portion 238 of the microneedle 235 may be thicker than the distal tip 240 or upper portion 239 of the microneedle 235. In certain embodiments, as shown in FIG 17, a bulb 237 may be provided at the distal tip 240 of a microneedle 235 to provide for effective anchoring of the microneedle 235 in the skin of a patient or subject. Microneedles 335 can include any number of friction or grip increasing features. For example, they may include projections, barbs, bulbs or a roughened surface or tip. Microneedles 235 may take on various configurations, e.g., straight, bent, filtered, hollow or a combination of the above.

[0131] In other embodiments, microneedles may have lengths that range from about 480 to 1450 microns, widths from about 160 to 470 microns, thicknesses from about 30 to 100 microns and tip angles from about 20 to 90 degrees, and arrays can contain from 5 to 50 microneedles. For example, microneedles having these dimensions have been shown to be less painful than hypodermic needles. Length and number of microneedles can affect the level of pain experienced. Decreasing microneedle length and/or the number of microneedles may be beneficial and act to further reduce pain and provide comfort.

[0132] In certain embodiments, the one or more microneedles may include an electrically conductive material such that the microneedles may transmit an electrical signal to an overlying electrode or other surface.- Microneedles may be constructed of an electrically conductive material and/or coated with an electrically conductive material. Optionally, microneedles may be coated with an electrically conductive material and constructed of a non-conductive material. Microneedles may be fabricated using a variety of materials, e.g., metals, stainless steel, solid or coat of gold over NI, Pd or Pd-Co, Pt, silicon, silicon dioxide, polymers, glass, biocompatible polymers, titanium, silver, or suture materials. Biodegradable polymers may also be used such that if a tip of a microneedle were to snap or break off during insertion, it would easily biodegrade.

[0133] A microneedle array 234 may be constructed or fabricated using any variety of manufacturing methods known to persons of ordinary skill in the art. Microneedles may be arrayed, attached, etched or deposited onto a surface of an electrode. In another embodiment, microneedles may be etched from or deposited onto a silicon electrode, such that the microneedle patch, including electrode and microneedles, are made from one material creating a durable and stable microneedle patch.

[0134] As shown in FIG 18, microneedles may be fabricated by creating micron sized holes on a silicon substrate and by using a KOH solution to create the needle shape. In other embodiments, the microneedles may be made of non-conductive material but may still be utilized to provide superior anchoring properties such that a microneedle patch may effectively adhere or attaché to a subject's skin.

[0135] In certain embodiments, microneedle arrays are fabricated by patterning SU-8 onto glass substrates and defining needle shapes by lithography. The tips of the needles can be sharpened using reactive ion etching. Optionally, holes may be drilled, e.g., by laser, through the microneedles and base substrate. Holes may be drilled off-center, but parallel to the microneedle axis, terminating in side-opening holes along the needle shaft below the needle tip. If desired, the holes can serve as micro fluidic needle bores for injection or infusion of drugs, medicines, insulin, proteins, nanoparticles that would encapsulate a drug or demonstrate the ability to deliver a virus for

vaccinations, etc. to be used separately or in combination with electrical or magnetic therapy. The microneedles may also be coated with nickel by electroplating, which can increase their mechanical strength.

[0136] In certain embodiments, microneedle patches or microneedle electrode arrays are made by fabricating master structures from which replicates are molded and then made electrically active. For example, SU-8 may be spun on a glass substrate bearing an array mask pattern, baked, and then exposed from the backside to from a tapered needle structure. Microneedles may be sharpened by RIE etching. A PDMS (polydimethylsiloxane) or similar material mold can then be copied from the master. A PMMA (polymethylmethacrylate) microneedle array is formed by solvent-casting and then released from the mold.

[0137] To provide the arrays with electrical functionality, a Ti/Cu seed layer may be deposited on the PMMA array and patterned by excimer laser to electrically isolate adjacent rows. A Ni layer (e.g., about 15 to 30 microns or 20 to 25 microns thick) may be electroplated on the patterned seed layer to enhance structural rigidity. A backside electrical connection to the array may be formed by backside etching of a hole and forming an electrical connection through the hole.

[0138] In another embodiment, the microneedle array is arranged in a 16 X 16 array (i.e., 256 needles). Each needle has a height of about 400 microns and the base diameter is about 100 microns. The pitch between microneedles can be about 250 microns. The microneedle arrays are then coated with metal and laser-etched to provide electrical functionality. Optionally, rows of microneedles can be electrically isolated from each other so that alternating rows can provide alternating electrical polarity. The arrays are also interfaced with a power source. Microneedles may be made of polymer, coated with a metal, and etched to act as alternating electrodes. In certain embodiments, the firing sequence of the microneedles by rows or groups may be varied or configured to alternate.

[0139] In certain embodiments, a microneedle array may include one or more microneedles having multiple channels. For example, a multichannel silicon microneedle may be constructed to deliver bioactive compounds into neural or other tissue while simultaneously monitoring and stimulating neurons and nerves.

[0140] FIG. 19 shows a cross sectional view of the skin 10 composed of an outer stratum corneum 15 covering the epidermis 16. The skin also includes the dermis 18, subcutaneous tissue/fat 12, and these layers cover muscle tissue 14. As shown in FIG 19, when a microneedle patch 228 is attached to a subject's skin, the microneedles 235 pierce the outer insulating stratum corneum layer 15. The microneedle patch 228 can detect current passing through a stimulated nerve, and provide a superior signal as the current detected is conducted through the microneedles 235, thereby bypassing

the poorly conductive stratum corneum layer 15 which generally encompasses the outer 10 to 15 microns of skin. In other embodiments, microneedles 235 may be fabricated to be long enough to penetrate the stratum corneum 15, but short enough not to puncture nerve endings, thus reducing the risk of pain, infection or injury.

[0141] In certain embodiments, microneedles are formed such that they are in direct contact with their corresponding or overlying electrodes. For example, a microneedle patch may include an adhesive electrode pad and may utilize a conductive gel to help hold the microneedles in place to prevent shear forces from breaking or bending the microneedles.

[0142] In certain embodiment, as shown in FIGs. 20a-20d, a microneedle patch or applicator may include multiple electrodes on a single patch or applicator, e.g., positive, negative, and/or control or ground electrodes, where the microneedles will be grouped in multiple arrays such that they conduct to the appropriate electrode. For example, FIGS 20a and 20b show a single patch having positive, negative and control electrodes where a separate array of electrodes is in contact with each respective electrode. This arrangement can be created using a single patch. Alternatively, as shown in FIG. 20c, two patches may be implemented, one including the control electrode with corresponding microneedle array and the other including the positive and negative electrodes with corresponding microneedle arrays. The various electrodes could be interchanged. Alternatively, as shown in FIG. 20d, three patches may be implemented, each having a separate electrode (control, positive, or negative) with a corresponding microneedle array. In use, in certain embodiments, the control may be attached above or near bone, while the positive and/or negative electrodes may be attached above nerve or muscle.

[0143] Referring again to FIG. 12, the energy emitting system 210 can be used to treat or prevent various conditions, e.g., urinary incontinence, restless leg syndrome and fecal incontinence, among others. Energy emitting system 210 includes one or more conductive coils 212 disposed within or along a housing 214, one or more sensors 216 configured to detect electrical conduction in the target nerve or to detect muscle stimulation, and a controller 218 coupled to the conductive coils 212 and optionally in communication with the sensor 216. The coils 212 are configured such that an electrical current generated by the controller 218 is passed through the coils 212 generating a magnetic field which will stimulate a target nerve, e.g., the tibial nerve 220, a muscle or other body part containing a portion of a target nerve, or any nerves branching off of a target nerve, located in proximity to the coils 212. In this particular embodiment, the housing 214 is in the form of a foot cradle, as shown in FIG. 4, however, the housing could also be in the form of a flexible wrap, garment or other design suitable for use with a subject.

[0144] Referring again to FIG. 12, energy emitting system 210 may be used to treat or prevent various conditions, e.g., urinary incontinence, restless leg syndrome or fecal incontinence. In certain embodiments, a method of using the energy emitting system 210 includes positioning a first portion of a patient's body, for example a foot, ankle, or leg, relative to housing 214 such that a posterior tibial nerve 220 within the first portion of the patient's body is in proximity to one or more conductive coils 212 disposed within or along the housing. In this particular embodiment, a patient's foot is positioned in a housing which is in the form of a foot cradle 215. A sensor in the form of a microneedle patch 228 may optionally be positioned along a second portion of the patient's body in proximity to the posterior tibial nerve 220. In this particular embodiment, microneedle patch 228 is attached to the patient's foot over a muscle to detect muscle stimulation. Alternatively, a patch could be placed elsewhere on the patient, for example, on the leg in proximity to the posterior tibial nerve 220, proximal to and up-stream from coils 212. Microneedle patch 228 may be composed of one or more microneedle arrays and one or more electrodes, as described supra.

[0145] Once the patient's foot is in position and the microneedle patch 228 (e.g., conductive microneedle patch) is in place, a current is passed from controller 218 through coils 212, and as a result, the coils 212 generate a magnetic field which is focused on the posterior tibial nerve 220. The magnetic field stimulates tibial nerve 220, generating a current that will flow along the tibial nerve 220 and spread along its length, to its sacral or pudendal nerve roots. Microneedle patch 228 detects corresponding muscle stimulation or twitching or electrical conduction through the stimulated posterior tibial nerve. Upon detection, the microneedle array may conduct and transmit an electrical signal to the overlying electrode of microneedle patch 228. The signal may be transmitted to controller 218, which can be integral or a separate controller or device, or a separate controller coupled to controller 218. The controller can then be varied or adjusted (to adjust the current or magnetic field) based on the signal received from microneedle patch 228 to ensure that adequate conduction of the posterior tibial nerve 220 occurs and an adequate and accurate dosage of treatment is being received. Although shown utilizing a sensor, it is also contemplated that the system could be used without a sensor.

[0146] Referring to FIG. 21, the method of using energy emitting system 210 described above with respect to FIG. 12 may be varied such that a conductive microneedle patch 228 is placed in proximity to or proximally over the afferent posterior tibial nerve 220, i.e., behind the patient's knee. In this position, a conductive microneedle patch 228 detects electrical conduction through the afferent posterior tibial nerve, i.e., it detects the electrical signal traveling through the posterior tibial nerve back up to the brain and spinal cord or it may detect corresponding muscle stimulation. The microneedle patch 228 sends the signal to controller 218 or to a separate controller coupled to

controller 218. The controller can then be varied or adjusted based on the signal received from microneedle patch 228 to ensure that adequate conduction or stimulation of the posterior tibial nerve 220 occurs and an adequate and accurate dosage of treatment is being received.

[0147] A sensor utilized in the energy emitting system 210 may be a microneedle patch 228 as described above or optionally the sensor may a sensor type known in the art (e.g., EKG sensor) or as described in any of the embodiments herein. It is also contemplated that energy emitting system 250 can be utilized without a sensor. Optionally, the sensor may be positioned within or along the housing, e.g., the foot cradle, along with the one or more conductive coils, or positioned at a site distant from the housing or conductive coils.

[0148] In certain embodiments, energy emitting system 210 my optionally include one or more conductive microneedle patches which can be positioned in proximity to the target nerve or muscle and provide an additional or supplemental electrical or magnetic stimulus to the target nerve or muscle.

[0149] Referring to FIG. 22, the energy emitting system 210 described above with respect to FIG. 12 may be varied to create energy emitting system 260. Energy emitting system 260 further includes one or more percutaneous electrode needles 262 or other needles or other percutaneous electrodes coupled to a controller 218 and having an end insertable into a subject's body in proximity to said target nerve or stimulation site. The percutaneous electrode needle 262 is inductively coupled to one or more conductive coils 212. In use, a first portion of a patient's body, for example a foot, ankle, or leg, is positioned relative to housing 214, e.g., foot cradle 215, such that a target nerve, e.g., posterior tibial nerve 220, located within the first portion of the patient's body is in proximity to one or more conductive coils 212 disposed within or along the housing 214. Conductive coils 212 are positioned proximate, optionally down-stream or distal to, a selected stimulation site 261. The percutaneous electrode needle 262 is inserted through the skin at a location and to a depth that brings the tip in close proximity to the stimulation site or target nerve to be stimulated. The controller 218 is activated and a current passes through conductive coils 212. The resulting magnetic field generates a current that traverses the internal stimulation site 261 by passing from conductive coils 212 to the internal percutaneous electrode needle 262, as indicated by arrow i. Also, the percutaneous electrode needle may be positioned within the generated magnetic field, whereby the magnetic field itself generates a current in the percutaneous electrode which stimulates a target nerve or traverses an internal stimulation site. Optionally, a current may be passed from the controller 218 through conductive coils 212 and/or from the controller 218 through percutaneous electrode needle 262, traversing the internal stimulation site as the current passes between the coils and needle.

[0150] In energy emitting system 260, current density and subsequent electric field intensity generated between conductive coils 212 and percutaneous electrode needle 262 is greater than that generated by traditional percutaneous stimulators. A greater electric field intensity makes site location for conductive coils 212 and percutaneous electrode needle 262 easier. Furthermore, the load impedance through the surface of the skin is much higher than the internal impedance, and as such, the relatively high load impedance lessens the likelihood of damage to tissue and nerves due to high current pulses.

[0151] Referring again to FIG. 22, a percutaneous electrode needle for use in any of the energy emitting systems described herein may include a variety of designs. For example, percutaneous electrode needle 262 may include a metal or plastic handle 263 to provide a secure grip for the user, while minimizing the risk of shock to the user. The needle tip can have a terminal portion 264 which may extend between about 0.5 and 10 mm or about 2.0 mm from the needle tip and may be constructed out of medical grade stainless steel or other biocompatible metals. The diameter of the needle can be small (less than about 0.25 mm) which minimizes trauma during insertion. Optionally, needle 262 can be coated with Teflon or similar insulative material 265 except for an exposed tip area 264. This allows for a higher field density at the tip for more precise operation. The exposed needle tip area 264 should have a sufficiently large surface area so as not to create too high a local current field that may cause irritation or pain.

[0152] In another embodiment, as shown in FIG. 23, percutaneous electrode needle 272 may be used in energy emitting system 260. Percutaneous electrode needle 272 may be constructed out of medical grade stainless steel or other biocompatible electrically conductive metal. Percutaneous electrode needle 272 includes a first end 276 for insertion into the patient's body in proximity to the preselected internal stimulation site or target nerve to be stimulated, and a second end 277. The size of the needle electrode 272 is preferably small, for example 34G needle electrode (0.22x10 mm), to minimize trauma during insertion. Percutaneous electrode needle 272 may also include an electrically conductive adaptor, e.g., an electrically conductive tape member 273. The tape member 273 includes an electrically conductive adhesive portion 274 and an electrically conductive non-adhesive portion 275. Alternatively, the adaptor may include an electrically conductive clip. The second end 277 of the needle electrode 272 preferably includes an enlarged portion to enable the electrically conductive tape member 273 to be more easily adhered thereto. Once it is determined that the percutaneous needle electrode 272 is properly positioned, the needle is fixedly adhered to the electrically conductive tape member 273 by folding the ends of the adhesive portion 274 of the electrically conductive tape member 272 over the second end 277 of the needle electrode thereby forming an electrical connection there between. The percutaneous needle electrode

272 is electrically coupled to controller 218 via electrically conductive tape member 273. Various other implantable or insertable electrode needles known to persons of skill in the art may also be utilized in the above described systems.

[0153] In certain embodiments of energy emitting system 260 as described above and shown in FIGS. 22-23, a sensor 216, such as a conductive microneedle patch 228, may be utilized to detect electrical conduction through the stimulated posterior tibial nerve 220 or to detect muscle stimulation, and transmit the signal to controller 218. The signal may be transmitted to controller 218, a separate controller or device, or a separate controller coupled to controller 218. The controller can then be varied or adjusted based on the signal from microneedle patch 228 to ensure that adequate conduction of the posterior tibial nerve 220 occurs and an adequate and accurate dosage of treatment is being received. It is also contemplated that energy system 260 may be utilized without a sensor 216, see for example FIGS. 24-25. Optionally, other types of sensors may be used in place of a microneedle patch sensor, such as other sensors described herein and sensors known to persons of ordinary skill in the art. The sensor may be placed over a portion of the subject's body suitable for detecting conduction of the target nerve (e.g., on the leg as shown) or over a muscle to detect muscle stimulation resulting from stimulating the target nerve.

[0154] In certain embodiments, as shown in FIG. 26, an energy emitting system 250 for providing a medical therapy includes a microneedle patch 252 (e.g., conductive microneedle patch) having one or more microneedle arrays deposited on a surface of one or more electrodes; one or more sensors 221 configured to detect electrical conduction in the target nerve or to detect muscle stimulation; and a controller 218 coupled to microneedle patch 252 and in communication with sensor 221. The microneedle patch 252 is configured such that an electrical current generated by the controller 218 is passed through the microneedle patch 252, generating a magnetic field or delivering or generating an electrical or magnetic stimulus to a target nerve, e.g., the tibial nerve 220, a muscle or other body part containing a portion of a target nerve, or any nerves branching off of a target nerve, located in proximity to microneedle patch 252.

[0155] Referring to FIG. 26, a method of using the energy emitting system 250 may include placing a conductive microneedle patch 252 on a first portion of a patient's body, for example a foot, ankle, or leg, in proximity to posterior tibial nerve 220 within the first portion of the patient's body. Sensor 221 is positioned along a second portion of the patient's body in proximity to the posterior tibial nerve 220. In this particular embodiment, sensor 216 is attached to the patient's leg in proximity to the posterior tibial nerve 220, proximal to and up-stream from conductive microneedle patch 252. Conductive microneedle patch 252 is composed of one or more microneedle arrays and one or more electrodes, as described in the embodiments above.

[0156] Once conductive microneedle patch 252 and sensor 221 are in position, a current is passed from controller 218 through conductive microneedle patch 252, resulting in an electrical stimulus of the posterior tibial nerve 220. Alternatively, the microneedle array may be insulated or constructed of non conductive material such that the microneedle patch 252 generates a magnetic field that stimulates tibial nerve 220 in a manner similar to the one or more coils described in the embodiments above, without an electrical stimulus. Whether the stimulus is electrical or magnetic, either stimulus will generate a current that will flow along the tibial nerve 220 and spread along its length, to its sacral or pudendal nerve roots. Sensor 221 detects electrical conduction through the stimulated posterior tibial nerve 220, and then transmits the signal to controller 218. In certain embodiments, the sensor may be in the form of a microneedle patch sensor. The signal may be transmitted to controller 218, a separate controller or device, or a separate controller coupled to controller 218. The controller can then be varied or adjusted based on the signal from sensor 221 to ensure that adequate conduction of the posterior tibial nerve 220 occurs and an adequate and accurate dosage of treatment is being received.

[0157] The sensor utilized in the energy emitting system 250 may be a sensor of the type described above, with respect to other embodiments. Optionally, for example, the sensor may be a microneedle patch. It is also contemplated that energy emitting system 250 can be utilized without a sensor. The sensor may be placed over a portion of the subject's body suitable for detecting conduction of the target nerve (e.g., on the leg as shown) or over a muscle to detect muscle stimulation resulting from stimulating the target nerve.

[0158] In certain embodiments, energy emitting system 250 my optionally include one or more conductive coils disposed within or along a housing which can be positioned in proximity to the target nerve or muscle and provide an additional or supplemental stimulation of the target nerve or muscle.

[0159] Referring to FIG. 27, the energy emitting system 250 described above with respect to FIG. 26 may be varied to create energy emitting system 280. Energy emitting system 280 further includes one or more percutaneous electrode needles 262 coupled to a controller 218 and having an end insertable into a subject's body in proximity to said target nerve. Optionally, the electrode needle may be non-percutaneous, such that it is insertable in an orifice or opening in the subject, such as a natural orifice. The percutaneous electrode needle 262 is inductively coupled to conductive microneedle patch 252. In use, a microneedle patch 252 is placed on a first portion of a patient's body, for example a foot, ankle, or leg, in proximity to posterior tibial nerve 220 within the first portion of the patient's body and down-stream or distal to a selected stimulation site 261. The

percutaneous electrode needle 262 is inserted through the skin at a location and to a depth that brings the tip in close proximity to the target nerve to be stimulated.

[0160] The controller 218 is activated and a current passes through microneedle patch 252 and traverses the internal stimulation site 261 by passing from microneedle patch 252 to the internal percutaneous electrode needle 262, as indicated by arrow i. The current passing through microneedle patch 252 may also generate a magnetic field which can generate a current that traverses the internal stimulation site 261 by passing from microneedle patch 252 to the internal percutaneous electrode needle 262. Also, the percutaneous electrode needle may be positioned within the generated magnetic field, whereby the magnetic field generates a current in the percutaneous electrode which stimulates a target nerve and traverses an internal stimulation site. Optionally, a current may be passed from the controller 218 through microneedle patch 252 and/or from the controller 218 through percutaneous electrode needle 262, traversing the internal stimulation site as the current passes between the patch and needle.

[0161] Referring to FIG. 28, energy emitting system 280 may be modified by using percutaneous electrode needle 272 in place of percutaneous electrode needle 262. Percutaneous electrode needle 272 would be constructed and function as described above with respect to FIG. 23. Various other implantable or insertable electrode needles known to persons of skill in the art may also be utilized in the above described systems. Additionally, energy emitting system 280 may utilize a sensor to detect electrical conduction through the stimulated posterior tibial nerve 220 and send a corresponding signal indicative of the detected conduction to controller 218 or other device such that the electrical or magnetic stimulus can be adjusted as necessary. The sensor may be a sensor 221, or optionally the sensor may be a microneedle patch. It is also contemplated that energy emitting system 280 can be utilized without a sensor. The sensor may be placed over a portion of the subject's body suitable for detecting conduction of the target nerve (e.g., on the leg as shown) or over a muscle to detect muscle stimulation resulting from stimulating the target nerve.

[0162] In any of the above systems, embodiments are contemplated where the sensors are also coupled or connected to or otherwise in communication with energy emitting devices, e.g., the conductive coils or conductive microneedle patches.

[0163] In certain embodiments, the one or more microneedles of the microneedle patch may include an electrically conductive material such that the microneedles may transmit an electrical signal to an overlying electrode or other surface. Microneedles may be constructed of an electrically conductive material and/or coated with an electrically conductive material. Optionally, microneedles may be coated with an electrically conductive material and constructed of a non-conductive material. Microneedles may be fabricated using a variety of materials, e.g., metals, stainless steel, solid or coat

of gold over NI, Pd or Pd-Co, Pt, silicon, silicon dioxide, polymers, glass, biocompatible polymers, titanium, silver, or suture materials. Biodegradable polymers may also be used such that if a tip of a microneedle were to snap or break off during insertion, it would easily biodegrade. Optionally, the microneedle patch may be non-conductive.

[0164] In certain embodiments, an electrode patch for improved conductance or conduction is provided. The patch can include at least one electrode having a first surface and/or a second surface. The electrode may optionally be attached to various other materials or adhesive materials. An array of microneedles may be deposited on a surface of the electrode, or attached to a patch or other material and indirectly or directly connected to the electrode. The array of microneedles may include a conductive material. Such patches may be used as a sensor to detect muscle stimulation or electrical conduction, or to provide or deliver an electrical stimulus or magnetic field, e.g., to a target nerve, and may optionally be used in any of the embodiments described herein or in any application where improved conductance or conduction is desired. Microneedles yield improved reduction in impedance compared to simple abrasion and other techniques, and are less painful and more comfortable for the patient.

[0165] In certain embodiments, typical voltage sensed at the skin and detectable or conductable by a microneedle patch or microneedle array may range from about 1 to 400 microvolts or about 10 to 300 microvolts.

[0166] In certain embodiments, methods of treating a subject with urinary incontinence or various pelvic floor disorders utilizing the energy emitting systems described herein are contemplated. Symptoms associated with urinary incontinence may be observed, detected, or diagnosed. An energy emitting device having one or more energy generators, e.g., one or more conductive coils or one or more microneedle patches, may be positioned in proximity to a target nerve, e.g., the tibial or posterior tibial nerve or popliteal or sacral nerve or branches thereof of a subject or patient along a first portion of a subject's or patient's body. The subject may or may not be exhibiting symptoms associated with urinary incontinence. In the case of the conductive coils, the coils may be positioned within or along a housing, such as a foot or knee cradle, and a foot or leg may be positioned therein. In the case of a microneedle patch, the patch may be attached to a subject's skin. Optionally, the method involves positioning a first portion of a subject's body, the subject exhibiting symptoms associated with urinary incontinence, relative to an energy emitting device such that a target nerve within the first portion of the body is in proximity to at least one energy generator disposed within or along the energy emitting device.

[0167] A current is then passed through the energy generator to produce, generate or deliver energy, e.g., a magnetic or electromagnetic field or electrical or magnetic energy or stimulus,

focused on the tibial or posterior tibial nerve or branches thereof. This in turn may cause the stimulation of a pudendal nerve, sacral plexus, or other nerves in the pelvic floor. Various nerves innervating the various muscles, sphincters, nerves, organs and conduits of the urinary tract and bladder may be stimulated directly or indirectly. In certain embodiments, a current is passed through one more coils, which generate a magnetic or electromagnetic field which stimulates the posterior tibial nerve. In certain embodiments, the positioning of the coils relative to the first portion of the subject's body may be adjusted to re-focus the magnetic field on the posterior tibial nerve as needed. In certain embodiments, a current is passed through a microneedle patch generating or delivering an electrical or magnetic stimulus or field. The positioning of the microneedle patch relative to the first portion of the subject's body may be adjusted to re-focus the electrical or magnetic stimulus or field on the posterior tibial nerve as needed.

[0168] Optionally, electrical conduction through the target nerve, e.g., the posterior tibial nerve, or muscle stimulation can be detected via at least one sensor. A conductive sensor may be positioned in proximity to the posterior tibial nerve along a second portion of the subject's body. Optionally, a sensor may be positioned over a corresponding muscle to detect muscle stimulation or twitching resulting from nerve stimulation. Optionally, the electrical conduction is detected along a second portion of the subject's body which is different from the first portion of the body. Optionally, the sensor in the form of a microneedle patch. In certain embodiments, the sensor may be positioned behind a subject's knee to detect the electrical conduction along the afferent posterior tibial nerve or on another portion of a patient's leg or foot. In other embodiments, the sensor may be positioned within or along a housing along with the one or more conductive coils.

[0169] Where a sensor is used, a signal is received from the sensors and the signal is indicative of the electrical conduction of the target nerve, e.g., posterior tibial nerve. The current may be adjusted or varied using a controller which is in communication with the energy generator. Adjustments may be made in response to the nerve or muscle stimulation detected by the conductive sensor, in order to optimize or ensure adequate treatment of urinary incontinence by achieving the appropriate level of conductance and appropriate level of nerve or muscle stimulation. Appropriate levels or parameters for current, frequency, magnetic field, treatment duration, etc., are those that result in an observed or detected reduction or prevention of symptoms associated with urinary incontinence. Treatment could also be administered and the appropriate levels and parameters achieved through observing or detecting reduction or prevention of symptoms where a sensor is not used. Examples of these symptoms include but are not limited to the inability to control urinary function, urinary leakage, and loss of bladder control.

[0170] In certain embodiments, the amplitude, frequency, direction of a generated magnetic field, electrical or magnetic stimulus, or firing sequence of the coils or microneedles making up the microneedle array may be adjusted. Optionally, the current may be varied according to a muscular response in the patient. Thus, to treat urinary incontinence, the magnetic field or electrical stimulus is applied to a subject or patient until the desired effects (e.g., reduction of symptoms) are achieved.

[0171] In certain embodiments, methods of treating a subject with fecal incontinence utilizing the energy emitting systems described herein are contemplated. Symptoms associated with fecal incontinence may be observed, detected, or diagnosed. An energy emitting device having one or more energy generators, e.g., one or more conductive coils or one or more microneedle patches, may be positioned in proximity to a target nerve, e.g., the tibial or posterior tibial nerve, or popliteal or sacral nerve or branches thereof, of a subject along a first portion of a subject's body. The subject may or may not be exhibiting symptoms associated with fecal incontinence. In the case of the conductive coils, the coils may be positioned within or along a housing, such as a foot or knee cradle, and a foot or leg may be positioned therein. In the case of a microneedle patch, the patch may be attached to a subject's skin. Optionally, the method involves positioning a first portion of a subject's body, the subject exhibiting symptoms associated with fecal incontinence, relative to an energy emitting device such that a target nerve within the first portion of the body is in proximity to at least one energy generator disposed within or along the energy emitting device.

[0172] A current is then passed through the energy generator to produce, generate or deliver energy, e.g., a magnetic or electromagnetic field or electrical or magnetic energy or stimulus, focused on the tibial or posterior tibial nerve or branches thereof. This in turn causes the stimulation of a pudendal nerve, sacral plexus, or nerves in the pelvic floor. Various nerves innervating the various muscles, sphincters, rectum, nerves, organs and conduits associated with bowel movements, fecal control, and the intestines may be stimulated directly or indirectly. Optionally, a current is passed through one more coils, which generate a magnetic or electromagnetic field which stimulates the posterior tibial nerve. In certain embodiments, the positioning of the coils relative to the first portion of the subject's body may be adjusted to re-focus the magnetic field on the posterior tibial nerve as needed. In certain embodiments, a current is passed through a microneedle patch generating or delivering an electrical or magnetic stimulus or field. The positioning of the microneedle patch relative to the first portion of the subject's body may be adjusted to re-focus the electrical or magnetic stimulus or field on the posterior tibial nerve as needed.

[0173] Optionally, electrical conduction through the target nerve, e.g., the posterior tibial nerve, or muscle stimulation can be detected via at least one sensor. A conductive sensor may be positioned in proximity to the posterior tibial nerve along a second portion of the subject's body.

Optionally, a sensor may be positioned over a corresponding muscle to detect muscle stimulation or twitching resulting from nerve stimulation. Optionally, the electrical conduction is detected along a second portion of the subject's body which is different from the first portion of the body. Optionally, the sensor is in the form a of a microneedle patch. In certain embodiments, the sensor may be positioned behind a subject's knee to detect the electrical conduction along the afferent posterior tibial nerve or on another portion of a patient's leg or foot. In other embodiments, the sensor may be positioned within or along a housing along with the one or more conductive coils.

[0174] Where a sensor is used, a signal is received from the sensors and the signal is indicative of the electrical conduction of the target nerve, e.g., posterior tibial nerve. The current may be adjusted or varied using a controller which is in communication with the energy generator. Adjustments may be made in response to the nerve or muscle stimulation detected by the conductive sensor, in order to optimize or ensure adequate treatment of fecal incontinence by achieving the appropriate level of conductance and appropriate level of nerve or muscle stimulation. Appropriate levels or parameters for current, frequency, magnetic field, treatment duration, etc., are those that result in an observed or detected reduction or prevention of symptoms associated with fecal incontinence. Treatment could also be administered and the appropriate levels and parameters achieved through observing or detecting reduction or prevention of symptoms where a sensor is not used. Examples of these symptoms include but are not limited: the loss of voluntary control to retain stool in the rectum; loss of fecal control; inability to control bowel movements, and fecal leaking:

[0175] In certain embodiments, the amplitude, frequency, direction of a generated magnetic field, electrical or magnetic stimulus, or firing sequence of the coils or microneedles making up the microneedle array may be adjusted. Optionally, the current may be varied according to a muscular response in the patient. Thus, to treat fecal incontinence, the magnetic field or electrical stimulus is applied to a subject or patient until the desired effects (e.g., reduction of symptoms) are achieved.

[0176] In certain embodiments, methods of treating a subject with restless leg syndrome utilizing the energy emitting systems described herein are contemplated. Victims afflicted with Restless Leg Syndrome (RLS or Ekbom's syndrome), are unable to remain seated or to stand still. Activities that require maintaining motor rest and limited cognitive stimulation, such as transportation, e.g., in a car, plane, train, etc., or attending longer meetings, lectures, movies or other performances, become difficult if not impossible. These sensations become more severe at night and RLS patients find sleep to be virtually impossible, adding to the diminishing quality of their lives. The urge to move, which increases over periods of rest, can be completely dissipated by movement, such as walking. However, once movement ceases, symptoms return with increased intensity. If an

RLS patient is forced to lie still, symptoms will continue to build like a loaded spring and, eventually, the legs will involuntary move, relieving symptoms immediately.

[0177] Thus, symptoms associated with restless leg syndrome may be observed, detected, or diagnosed. An energy emitting device having one or more energy generators, e.g., one or more conductive coils or one or more microneedle patches, may be positioned in proximity to a target nerve, e.g., the tibial or posterior tibial nerve, or popliteal or sacral nerve or branches thereof or other nerves associated with restless leg syndrome, of a subject along a first portion of a subject's body. The subject may or may not be exhibiting symptoms associated with restless leg syndrome. In the case of the conductive coils, the coils may be positioned within or along a housing, such as a foot or knee cradle, and a foot or leg may be positioned therein. In the case of a microneedle patch, the patch may be attached to a subject's skin. Optionally, the method involves positioning a first portion of a subject's body, the subject exhibiting symptoms associated with restless leg syndrome, relative to an energy emitting device such that a target nerve within the first portion of the body is in proximity to at least one energy generator disposed within or along the energy emitting device.

[0178] A current is then passed through the energy generator to produce, generate or deliver energy, e.g., a magnetic field or electrical or magnetic energy or stimulus, focused on the tibial or posterior tibial nerve or branches thereof or other nerves associated with restless leg syndrome. This in turn causes the stimulation of a pudendal nerve, sacral plexus or other nerves innervating the pelvic floor or various muscles, nerves, or organs associated with restless leg syndrome. The various nerves may stimulated directly or indirectly. Optionally, a current is passed through one more coils, which generates a magnetic or electromagnetic field which stimulates the posterior tibial nerve. In certain embodiments, the positioning of the coils relative to the first portion of the subject's body may be adjusted to re-focus the magnetic field on the posterior tibial nerve as needed. In certain embodiments, a current is passed through a microneedle patch generating or delivering an electrical or magnetic stimulus or field. The positioning of the microneedle patch relative to the first portion of the subject's body may be adjusted to re-focus the electrical or magnetic stimulus or field on the posterior tibial nerve as needed.

[0179] Optionally, electrical conduction through the target nerve, e.g., the posterior tibial nerve, or muscle stimulation can be detected via at least one sensor. A conductive sensor may be positioned in proximity to the posterior tibial nerve along a second portion of the subject's body. Optionally, a sensor may be positioned over a corresponding muscle to detect muscle stimulation or twitching resulting from nerve stimulation. Optionally, the electrical conduction is detected along a second portion of the subject's body which is different from the first portion of the body. Optionally, the sensor in the form a of a microneedle patch. In certain embodiments, the sensor may be

positioned behind a subject's knee to detect the electrical conduction along the afferent posterior tibial nerve or on another portion of a patient's leg or foot. In other embodiments, the sensor may be positioned within or along a housing along with the one or more conductive coils.

[0180] Where a sensor is used, a signal is received from the sensors and the signal is indicative of the electrical conduction of the target nerve, e.g., posterior tibial nerve. The current may be adjusted or varied using a controller which is in communication with the energy generator. Adjustments may be made in response to the nerve or muscle stimulation detected by the conductive sensor, in order to optimize or ensure adequate treatment of restless leg syndrome by achieving the appropriate level of conductance and appropriate level of nerve or muscle stimulation. Appropriate levels or parameters for current, frequency, magnetic field, treatment duration, etc., are those that result in an observed or detected reduction or prevention of symptoms associated with restless leg syndrome. Treatment could also be administered and the appropriate levels and parameters achieved through observing or detecting reduction or prevention of symptoms where a sensor is not used. Examples of these symptoms include but are not limited to: uncomfortable sensations in the limbs, irresistible urges to move, usually the legs; motor restlessness; when at rest, symptoms return or worsen; and symptoms worsen in the evening and at night.

[0181] In certain embodiments, the amplitude, frequency, direction of a generated magnetic field, electrical or magnetic stimulus, or firing sequence of the coils or microneedles making up the microneedle array may be adjusted. Optionally, the current may be varied according to a muscular response in the patient. Thus, to treat restless leg syndrome, the magnetic field or electrical stimulus is applied to a subject or patient until the desired effects (e.g., reduction of symptoms) are achieved.

[0182] In certain embodiments, methods of treating a subject suffering from premature ejaculation or various pelvic floor disorders utilizing the energy emitting systems described herein are contemplated. Symptoms associated with premature ejaculation may be observed, detected, or diagnosed. An energy emitting device having one or more energy generators, e.g., one or more conductive coils or one or more microneedle patches, may be positioned in proximity to a target nerve, e.g., the tibial or posterior tibial nerve or popliteal or sacral nerve or branches thereof of a subject along a first portion of a subject's body. The subject may or may not be exhibiting symptoms associated with premature ejaculation. In the case of the conductive coils, the coils may be positioned within or along a housing, such as a foot or knee cradle, and a foot or leg may be positioned therein. In the case of a microneedle patch, the patch may be attached to a subject's skin. Optionally, the method involves positioning a first portion of a subject's body, the subject exhibiting symptoms associated with premature ejaculation, relative to an energy emitting device such that a

target nerve within the first portion of the body is in proximity to at least one energy generator disposed within or along the energy emitting device.

[0183] A current is then passed through the energy generator to produce, generate or deliver energy, e.g., a magnetic or electromagnetic field or electrical or magnetic energy or stimulus, focused on the tibial or posterior tibial nerve or branches thereof. This in turn may cause the stimulation of a pudendal nerve, sacral plexus, or other nerves in the pelvic floor or nerves associated with the control of ejaculation. Various nerves innervating the various muscles, sphincters, nerves, organs and conduits of the urinary tract, bladder or reproductive system, or pelvic floor may be stimulated directly or indirectly. Optionally, a current is passed through one more coils, which generates a magnetic or electromagnetic field which stimulates the posterior tibial nerve. In certain embodiments, the positioning of the coils relative to the first portion of the subject's body may be adjusted to re-focus the magnetic field on the posterior tibial nerve as needed. In certain embodiments, a current is passed through a microneedle patch generating or delivering an electrical or magnetic stimulus or field. The positioning of the microneedle patch relative to the first portion of the subject's body may be adjusted to re-focus the electrical or magnetic stimulus or field on the posterior tibial nerve as needed.

[0184] Optionally, electrical conduction through the target nerve, e.g., the posterior tibial nerve, or muscle stimulation can be detected via at least one sensor. A conductive sensor may be positioned in proximity to the posterior tibial nerve along a second portion of the subject's body. Optionally, a sensor may be positioned over a corresponding muscle to detect muscle stimulation or twitching resulting from nerve stimulation. Optionally, the electrical conduction is detected along a second portion of the subject's body which is different from the first portion of the body. Optionally, the sensor in the form of a microneedle patch. In certain embodiments, the sensor may be positioned behind a subject's knee to detect the electrical conduction along the afferent posterior tibial nerve or on another portion of a patient's leg or foot. In other embodiments, the sensor may be positioned within or along a housing along with the one or more conductive coils.

[0185] Where a sensor is used, a signal is received from the sensors and the signal is indicative of the electrical conduction of the posterior tibial nerve. The current may be adjusted or varied using a controller which is in communication with the energy generator. Adjustments may be made in response to the nerve or muscle stimulation detected by the conductive sensor, in order to optimize or ensure adequate treatment of premature ejaculation by achieving the appropriate level of conductance and appropriate level of nerve or muscle stimulation. Appropriate levels for current, frequency, magnetic field, treatment duration, etc., are levels that result in an observed or detected reduction or prevention of symptoms associated with premature ejaculation. Treatment could also be

administered and the appropriate levels and parameters achieved through observing or detecting reduction or prevention of symptoms where a sensor is not used. Examples of these symptoms include but are not limited to: ejaculation that frequently occurs within one minute or less of penetration; the inability to delay ejaculation on penetrations; or persistent or recurrent ejaculation with minimal stimulation before, on or shortly after penetration.

[0186] In certain embodiments, the amplitude, frequency, direction of a generated magnetic field, electrical or magnetic stimulus, or firing sequence of the coils or microneedles making up the microneedle array may be adjusted. Optionally, the current may be varied according to a muscular response in the patient. Thus, to treat premature ejaculation, the magnetic field or electrical stimulus is applied to a subject or patient until the desired effects (e.g., reduction of symptoms) are achieved.

[0187] Exemplary treatment parameters for treating various conditions, e.g., urinary incontinence, using the systems and methods described herein may include the following. Operation of a conductive coil at about 10 to 20 hertz generating a magnetic field of about .25 to 1.5 tesla, where the coil is administered to a patient for a duration of about 30 minutes/day or 30 minutes per week, depending on the severity of the symptoms, until the symptoms subside. The above treatment parameters or variations on the parameters may be used for treatment of urinary incontinence, fecal incontinence, restless leg syndrome, or premature ejaculation or other conditions. For example, the coil may be operated at various parameter ranges falling with the following ranges: about 5 to 100 hertz, about 1 to 10 tesla, for about 15 minutes to 2 hours per day or week. In treating premature ejaculation, a patient may receive treatment about 4 to 10 hours prior to intercourse. A maintenance phase of treatment, after the initial treatment, may vary for various conditions. For example, the maintenance phase may require application of the systems and methods described herein at the parameters described herein for 30 minutes/week or 30 minutes/month. Any treatment parameter may be varied or modified based on the effect on the patient or sensor or patient feedback regarding stimulation, until the desired result of treating or preventing a condition is achieved.

[0188] In certain embodiments, as shown in FIGs. 29a-29d, energy emitting device may include a controller 289 and a foot cradle 290. Foot cradle 290 may include vertical foot plate 291, and horizontal foot plate 292, where each plate can be adjusted using vertical foot plate knob 293 and horizontal foot plate knob 294. One or more EMG plugs 295 are provided. An air core coil 297 or other type of coil is provided. A display screen 296 may also be provided along with power cord 298. The display screen 296 can display a variety of information to the user and/or practitioner such as the level of power or current applied, treatment time, temperature of the cradle device, detected current levels and/or physiological parameters, etc., to facilitate effective and efficient therapeutic treatment. The information can be used to vary or adjust the controller to ensure that adequate

conduction of a target nerve, e.g., posterior tibial nerve 220 or muscle stimulation occurs and an adequate and accurate dosage of treatment is being received. Controls may also be included to affect the following: power, field strength, frequency, pulse, start/pause and cancelation of therapy (as shown) or other parameters one of skill in the art would find necessary or useful to control or monitor. In certain embodiments, a sensor may be connected, connected or in communication with the foot cradle or other energy emitting apparatus, controller, housing , conductive coils, or microneedle patch.

[0189] In certain embodiments, as shown in FIGS 30-31, an energy emitting device may include a controller and a knee cradle. The cradle may be configured to provide the conductive coil in proximity to the popliteal fossa or area directly behind the knee. In certain embodiments, the knee cradle may configured to cradle or surround at least a portion of the knee or substantially the entire knee without placing direct pressure on the popliteal fossa, thereby minimizing or avoiding venous thrombosis. In one embodiment, the device may be utilized while the knee is in the flexed position (Fig. 30). In another embodiment, the device may be utilized while the knee is in a non-flexed position (Fig. 31).

[0190] In certain embodiments, the energy emitting device, e.g., foot cradle, knee cradle, etc., includes a conductive coil positioned such that a target nerve is automatically targeted. The conductive coil is configured, sized and positioned within the device such that the generated magnetic field may encompass and stimulate the target nerve in any patient based on the target nerve's anatomical location, thus providing automatic targeting of the nerve in any patient once the patient positions a particular body portion in the device.

[0191] In various embodiments described herein, sensors may detect voltage or current and may be connected, coupled, wirelessly connected or coupled or otherwise in communication with housing, conductive coils, microneedle patch, energy emitting apparatus, energy generators, or electrode needles and/or controller using a variety of methods or techniques known in the art. In various embodiments described herein, housings, conductive coils, microneedle patches, energy emitting apparatus, energy generators, or electrode needles may be connected, coupled, wirelessly connected or coupled or otherwise in communication with each other, controllers or sensors, using a variety of methods or techniques known in the art.

[0192] Coils used in any of the embodiments described above and illustrated in the corresponding figures may take on a variety of shapes, sizes, and configurations. For example, a coil may be shaped as a spiral (as shown) or have a simple helical pattern or be a figure eight coil, a four leaf clover coil, a Helmholtz coil, a modified Helmholtz coil, or may be shaped as a combination of the aforementioned coil patterns. Additionally, other coil designs beyond those mentioned

hereinabove might be utilized as long as a magnetic field is developed that will encompass a target nerve.

[0193] The coils may have a variety of dimensions and configurations. In certain embodiments, a coil may have a central aperture. The diameter of the aperture may range from about 0.5 inch to 2 inches or 1 inch to 1.5 inches or the aperture may have a diameter of about 1 inch. The diameter of the coil body may vary. For example, the diameter may range from about 3.0 to about 7 inches or from about 4 to about 5 inches or the diameter may about 4.5 inches. The coil body may include any suitable number of turns. For example, the coil body may include from about 2 to about 25 turns or from about 10 to about 20 turns or 14 to 17 turns. The adjacent turns may be spaced apart from each other, providing a gap there between. An end or cross section of a turn may have various dimensions. For example, the end or cross section may have a height that is greater than its width. An end or cross section of a turn may have a height ranging from about 1 to 5 cm or from about 10 mm to 51 mm (about .3 inches to 2 inches) or about 25 mm to 40 mm (about 1 inch to 1.5 inches) or about 12 mm to 40 mm (about .5 inch to 1.5 inch) or about .5 inch to 2 inch. The end or cross section of the turn may have a width ranging from about 0.5 mm to about 5mm (about .019 inch to .19 inch) or from about 1mm to about 2 mm (about .03 inch to .07 inch) or about .2 mm to about 1.6 mm (about .01 inch to .06 inch). The above are all exemplary dimensions, where other dimensions are also contemplated depending on the use and configuration of a device.

[0194] It is also contemplated that any of the energy emitting systems or devices described herein can be used with or without a sensor for detecting conduction of a stimulated nerve or muscle stimulation resulting from the magnetic field generated by the conductive coil and delivered to a patient or an electrical stimulus delivered to a patient. Also, in any of the above embodiments, a controller may optionally be connected, coupled, integral to or otherwise in communication with the conductive coils and/or the sensor. Optionally, the sensor may be connected, coupled, integral to or otherwise in communication with the conductive coil.

[0195] While the invention has been described in connection with the above described embodiments, it is not intended to limit the scope of the invention to the particular forms set forth, but on the contrary, it is intended to cover such alternatives, modifications, and equivalents as may be included within the scope of the invention. Further, the scope of the present invention fully encompasses other embodiments that may become obvious to those skilled in the art and the scope of the present invention is limited only by the appended claims.

CLAIMS

What is claimed is:

1. An energy emitting system for providing a medical therapy comprising:

at least one conductive coil disposed within or along a housing, where the at least one coil is configured to generate a magnetic field focused on a target nerve in proximity to the at least one coil;

at least one sensor configured to detect electrical conduction in the target nerve or muscle stimulation, wherein the sensor is comprised of a microneedle array attachable to a skin surface in proximity to a target nerve or muscle; and

a controller coupled to said at least one conductive coil and in communication with said at least one sensor.

2. The system of claim 1, wherein the magnetic field generated by said at least one conductive coil is varied based on the electrical conduction or muscle stimulation detected by said at least one sensor to ensure adequate therapeutic stimulation.

3. The system of claim 1, wherein the microneedle array is arrayed over a housing.

4. The system of claim 3, wherein the housing is comprised of a patch having at least one electrode and said microneedle array extends from a first surface of the electrode.

5. The system of claim 4, wherein the patch comprises a positive, negative and control electrode, each electrode comprising a microneedle array extending therefrom.

6. The system of claim 4, wherein the microneedle array is etched from a surface of the electrode.

7. The system of claim 1, wherein said microneedle array comprises at least one microneedle comprising an electrically conductive material such that it can transmit an electrical signal to an overlying electrode.

8. The system of claim 7, wherein said microneedle comprises metal, silicon, biocompatible polymers, titanium, silver, or suture material.

9. The system of claim 1, wherein said microneedle array comprises at least one microneedle coated with an electrically conductive material such that it can transmit an electrical signal to an overlying electrode.

10. The system of claim 1, wherein said microneedle array comprises at least one microneedle comprising a distal tip and a bulb extending from said distal tip to provide for anchoring of said microneedle into a subject's skin.

11. The system of claim 1, wherein said microneedle array comprises at least one microneedle having a diameter in the range of about 1 to 100 microns.

12. The system of claim 11, wherein a diameter of said microneedle is in the range of about 10 to 30 microns.

13. The system of claim 1, wherein said microneedle array comprises at least one microneedle having a length in the range of about 1 to 100 microns.

14. The system of claim 13, wherein a length of said microneedle is in the range of about 100 to 150 microns.

15. The system of claim 1, further comprising an electrode needle coupled to said controller and having an end insertable into a subject's body in proximity to a stimulation site, wherein said needle is inductively coupled to said at least one conductive coil.

16. The system of claim 15, wherein said at least one conductive coil is positioned distal to said stimulation site such that upon activation of said controller a current traverses the stimulation site by passing from said at least one conductive coil to said percutaneous electrode needle.

17. The system of claim 16, further comprising at least one conductive microneedle patch positioned distal to said stimulation site and coupled to the controller such that upon activation of said controller a current traverses the stimulation site by passing from said at least one conductive microneedle patch and said at least one conductive coil to said electrode needle.

18. An energy emitting system for providing a medical therapy comprising:

at least one conductive coil disposed within or along a housing, where the at least one coil is configured to generate a magnetic field focused on a target nerve in proximity to the at least one coil;

at least one sensor configured to detect electrical conduction in the target nerve or muscle stimulation, wherein the sensor is comprised of at least one microneedle comprising an electrically conductive material such that it can transmit an electrical signal to an overlying electrode and a distal tip having a bulb extending from said distal tip to provide for anchoring of said microneedle into a subject's skin; and

a controller coupled to said at least one conductive coil and in communication with said at least one sensor.

19. An energy emitting system for providing a medical therapy comprising:

at least one microneedle patch comprised of a microneedle array deposited on a surface of at least one electrode, where said at least one microneedle patch is configured to generate an electrical or magnetic stimulus focused on a target nerve in proximity to the at least one conductive microneedle patch; and

a controller coupled to said at least one microneedle patch.

20. The system of claim 19, further comprising at least one sensor configured to detect the electrical conduction in the target nerve or muscle stimulation and attachable to a skin surface in proximity to a target nerve or muscle.

21. The system of claim 20, wherein the electrical or magnetic stimulus generated by said at least one microneedle patch is varied according to the electrical conduction or muscle stimulation detected by said at least one sensor to ensure adequate therapeutic stimulation.

22. The system of claim 19, wherein the microneedle array is etched from a surface of the electrode.

23. The system of claim 19, wherein said microneedle patch comprises at least one microneedle comprising an electrically conductive material such that it can transmit an electrical signal to an overlying electrode.

24. The system of claim 23, wherein said microneedle comprises metal, silicon, biocompatible polymers, titanium, silver, or suture material.

25. The system of claim 19, wherein said sensor is comprised of at least one microneedle array.

26. The system of claim 19, wherein said microneedle array comprises at least one microneedle comprising a distal tip and a bulb extending from said distal tip to provide for anchoring of said microneedle into a subject's skin.

27. The system of claim 19, wherein said microneedle array comprises at least one microneedle having a diameter in the range of about 1 to 100 microns.

28. The system of claim 27, wherein a diameter of said microneedle is in the range of about 10 to 30 microns.

29. The system of claim 19, wherein said microneedle array comprises at least one microneedle having a length in the range of about 1 to 150 microns.

30. The system of claim 29, wherein a length of said microneedle is in the range of about 100 to 150 microns.

31. The system of claim 19, further comprising an electrode needle coupled to said controller and having an end insertable into a subject's body in proximity to a stimulation site, wherein said needle is inductively coupled to said at least one conductive microneedle patch.

32. The system of claim 31, wherein said at least one microneedle patch is positioned distal to said stimulation site such that upon activation of said controller a current traverses the stimulation site by passing from said at least one microneedle patch to said electrode needle.

33. The system of claim 32, further comprising at least one conductive coil positioned distal to said stimulation site and coupled to said controller such that upon activation of said

controller a current traverses the stimulation site by passing from said at least one microneedle patch and said at least one conductive coil to said electrode needle.

34. An energy emitting system for providing a medical therapy comprising:

at least one conductive microneedle patch comprised of a microneedle array deposited on a surface of at least one electrode, wherein said microneedle array comprises an electrically conductive material such that it can transmit an electrical signal to an overlying electrode and a distal tip having a bulb extending from said distal tip to provide for anchoring of said microneedle into a subject's skin, said microneedle patch configured to deliver an electrical or magnetic stimulus to a target nerve in proximity to the at least one conductive microneedle patch;

at least one sensor configured to detect electrical conduction in the target nerve or muscle stimulation and attachable to a skin surface in proximity to a target nerve or muscle; and

a controller coupled to said at least one conductive microneedle patch and in communication with said at least one sensor.

35. An energy emitting system for providing a medical therapy comprising:

at least one conductive coil disposed within or along a housing, where the at least one coil is configured to generate a magnetic field focused on a target nerve in proximity to the at least one coil;

an electrode needle having an end insertable into a subject's body in proximity to a stimulation site, wherein said needle is inductively coupled to said at least one conductive coil; and

a controller coupled to said at least one conductive coil and said electrode needle.

36. The system of claim 35, wherein said at least one conductive coil is positioned distal to said stimulation site such that upon activation of said controller a current traverses the stimulation site by passing from said at least one conductive coil to said electrode needle.

37. The system of claim 35, further comprising at least one sensor in communication with said controller and configured to detect electrical conduction in the target nerve or muscle stimulation and attachable to a skin surface in proximity to a target nerve or muscle, wherein the magnetic field generated by said at least one conductive coil is varied based on the muscle stimulation or electrical conduction detected by said at least one sensor to ensure adequate therapeutic stimulation.

38. A method of treating a subject with urinary incontinence comprising:

positioning a first portion of a subject's body, the subject exhibiting symptoms associated with urinary incontinence, relative to an energy emitting device such that a tibial nerve within the first portion of the body is in proximity to at least one energy generator disposed within or along the energy emitting device;

passing a current through the at least one energy generator to produce a magnetic field or electrical stimulus focused on the tibial nerve;

stimulating a nerve that innervates the pelvic floor of the subject via stimulation of the tibial nerve with the magnetic field or electrical stimulus; and

reducing symptoms associated with urinary incontinence.

39. The method of claim 38, wherein the energy generator comprises a conductive coil for generating a magnetic field.

40. The method of claim 39, wherein positioning comprises placing a foot, ankle, or leg relative to at least one conductive coil disposed within or along a housing.

41. The method of claim 39, wherein positioning comprises placing a popliteal fossa relative to at least one conductive coil disposed within or along a housing.

42. The method of claim 38, wherein the energy generator comprises a microneedle patch for producing a magnetic field or electrical stimulus.

43. The method of claim 38, wherein a nerve that innervates the pelvic floor comprises the pudendal nerve or sacral plexus.

44. The method of claim 38, wherein symptoms associated with urinary incontinence comprise urinary leakage, loss of bladder control and the inability to control urinary function.

45. The method of claim 38, further comprising detecting electrical conduction through the tibial nerve or corresponding muscle stimulation via at least one sensor positioned along a second portion of the body.

46. The method of claim 45, wherein the sensor comprises a microneedle array.

47. The method of claim 45, wherein the sensor is positioned in proximity to the tibial nerve, over a muscle innervated by the tibial nerve, or over the popliteal fossa.

48. The method of claim 45, further comprising adjusting the current via a controller in communication with the energy generator according to a signal received from the sensor indicative of the nerve conduction.

49. The method of claim 48, wherein adjusting comprises adjusting amplitude, frequency, direction of a magnetic field, or firing sequence of the energy generator.

50. The method of claim 48, wherein adjusting comprises adjusting a position of the at least one coil relative to the first portion of the subject's body to re-focus the magnetic field on the tibial nerve.

51. The method of claim 48, wherein adjusting comprises adjusting a position of the microneedle patch relative to the first portion of the subject's body to re-focus the electrical or magnetic stimulus on the tibial nerve.

52. The method of claim 48, wherein adjusting comprises varying the current according to a muscular response in the patient.

53. The method of claim 39, wherein the conductive coil is operated at about 10 to 20 hertz to generate a magnetic field of about .25 to 1.5 tesla for a duration of about 30 minutes per day.

54. A method of treating a subject with urinary incontinence comprising:

positioning a first portion of a subject's body, the subject exhibiting symptoms associated with urinary incontinence, relative to a housing such that a posterior tibial nerve within the first portion of the body is in proximity to at least one conductive coil disposed within or along the housing;

passing a current through the at least one conductive coil to produce a magnetic field focused on the posterior tibial nerve;

detecting electrical conduction of the posterior tibial nerve via at least one microneedle array positioned along a second portion of the body;

receiving a signal from the microneedle array indicative of the electrical conduction;

adjusting the current via a controller in communication with the conductive coil according to the signal received from the microneedle array; and

reducing symptoms associated with urinary incontinence.

ABSTRACT OF THE DISCLOSURE

An energy emitting apparatus for providing a medical therapy includes one or more energy generators, a logic controller electrically connected to the one or more energy generators, and one or more sensors that are connected to the logic controller for detecting electric conduction in a target nerve. The energy generators produce energy focused on the target nerve upon receiving a signal from the logic controller, and the energy is varied by the logic controller according to an input provided by the one or more sensors. The energy emitting apparatus includes one or more conductive coils that produce a magnetic field focused on the target nerve upon receiving an electric current from the logic controller based on input provided by the sensors. The sensor may also include a microneedle array to detect electrical conduction or an energy emitting apparatus may include a microneedle array to produce or deliver energy, e.g., an electrical or magnetic stimulus or field.

Filing Date: 07/23/09

Approved for use through 7/31/2006. OMB 0651-0032
U.S. Patent and Trademark Office; U.S. DEPARTMENT OF COMMERCE

Under the Paperwork Reduction Act of 1995, no persons are required to respond to a collection of information unless it displays a valid OMB control number.

PATENT APPLICATION FEE DETERMINATION RECORD

Substitute for Form PTO-875

Application or Docket Number: 12/508,529

APPLICATION AS FILED – PART I

FOR	(Column 1) NUMBER FILED	(Column 2) NUMBER EXTRA	SMALL ENTITY RATE ($)	SMALL ENTITY FEE ($)	OR	OTHER THAN SMALL ENTITY RATE ($)	OTHER THAN SMALL ENTITY FEE ($)
BASIC FEE (37 CFR 1.16(a), (b), or (c))	N/A	N/A	N/A	82		N/A	
SEARCH FEE (37 CFR 1.16(k), (i), or (m))	N/A	N/A	N/A	270		N/A	
EXAMINATION FEE (37 CFR 1.16(o), (p), or (q))	N/A	N/A	N/A	110		N/A	
TOTAL CLAIMS (37 CFR 1.16(i))	54 minus 20 =	34	x$26	884	OR	x$52	
INDEPENDENT CLAIMS (37 CFR 1.16(h))	7 minus 3 =	* 4	x$110	440		x$220	
APPLICATION SIZE FEE (37 CFR 1.16(s))	If the specification and drawings exceed 100 sheets of paper, the application size fee due is $270 ($135 for small entity) for each additional 50 sheets or fraction thereof. See 35 U.S.C. 41(a)(1)(G) and 37 CFR						
MULTIPLE DEPENDENT CLAIM PRESENT (37 CFR 1.16(j))			195			390	
			TOTAL	1786		TOTAL	

* If the difference in column 1 is less than zero, enter "0" in column 2.

APPLICATION AS AMENDED – PART II

AMENDMENT A

	(Column 1) CLAIMS REMAINING AFTER AMENDMENT		(Column 2) HIGHEST NUMBER PREVIOUSLY PAID FOR	(Column 3) PRESENT EXTRA	SMALL ENTITY RATE ($)	SMALL ENTITY ADDI-TIONAL FEE ($)	OR	OTHER THAN SMALL ENTITY RATE ($)	OTHER THAN SMALL ENTITY ADDI-TIONAL FEE ($)
Total (37 CFR 1.16(i))	*	Minus	**	=	x =		OR	x =	
Independent (37 CFR 1.16(h))	*	Minus	***	=	x =		OR	x =	
Application Size Fee (37 CFR 1.16(s))									
FIRST PRESENTATION OF MULTIPLE DEPENDENT CLAIM (37 CFR 1.16(j))					N/A		OR	N/A	
					TOTAL ADD'T FEE		OR	TOTAL ADD'T FEE	

AMENDMENT B

	(Column 1) CLAIMS REMAINING AFTER AMENDMENT		(Column 2) HIGHEST NUMBER PREVIOUSLY PAID FOR	(Column 3) PRESENT EXTRA	RATE ($)	ADDI-TIONAL FEE ($)	OR	RATE ($)	ADDI-TIONAL FEE ($)
Total (37 CFR 1.16(i))	*	Minus	**	=	x =		OR	x =	
Independent (37 CFR 1.16(h))	*	Minus	***	=	x =		OR	x =	
Application Size Fee (37 CFR 1.16(s))									
FIRST PRESENTATION OF MULTIPLE DEPENDENT CLAIM (37 CFR 1.16(j))					N/A		OR	N/A	
					TOTAL ADD'T FEE		OR	TOTAL ADD'T FEE	

* If the entry in column 1 is less than the entry in column 2, write "0" in column 3.
** If the "Highest Number Previously Paid For" IN THIS SPACE is less than 20, enter "20".
*** If the "Highest Number Previously Paid For" IN THIS SPACE is less than 3, enter "3".
The "Highest Number Previously Paid For" (Total or Independent) is the highest number found in the appropriate box in column 1.

This collection of information is required by 37 CFR 1.16. The information is required to obtain or retain a benefit by the public which is to file (and by the USPTO to process) an application. Confidentiality is governed by 35 U.S.C. 122 and 37 CFR 1.14. This collection is estimated to take 12 minutes to complete, including gathering, preparing, and submitting the completed application form to the USPTO. Time will vary depending upon the individual case. Any comments on the amount of time you require to complete this form and/or suggestions for reducing this burden, should be sent to the Chief Information Officer, U.S. Paten and Trademark Office, U.S. Department of Commerce, P.O. Box 1450, Alexandria, VA 22313-1450. DO NOT SEND FEES OR COMPLETED FORMS TO THIS ADDRESS. **SEND TO: Commissioner for Patents, P.O. Box 1450, Alexandria, VA 22313-1450.**

If you need assistance in completing the form, call 1-800-PTO-9199 and select option 2.