US005267371A

United States Patent [19]

Soler et al.

[11] Patent Number: 5,267,371

[45] Date of Patent: Dec. 7, 1993

[54] CYCLONIC BACK-PACK VACUUM CLEANER

[75] Inventors: **Norman V. Soler**, Port Colborne; **Tat-Chi A. Tsui**, St. Catharines; **Donald LaBute**, Welland, all of Canada

[73] Assignee: **Iona Appliances Inc.**, Welland, Canada

[21] Appl. No.: **19,485**

[22] Filed: **Feb. 19, 1993**

Related U.S. Application Data

[63] Continuation-in-part of Ser. No. 838,183, Feb. 20, 1992, abandoned.

[30] **Foreign Application Priority Data**

Feb. 19, 1992 [CA] Canada 2061469

[51] **Int. Cl.**[5] **A47L 5/36**

[52] **U.S. Cl.** **15/327.5**; 15/352; 15/353; 55/356; 55/429

[58] **Field of Search** 15/327.5, 413, 353, 15/352; 55/356, 429

[56] **References Cited**

U.S. PATENT DOCUMENTS

1,759,947	5/1930	Lee .	
1,953,944	4/1934	Becker .	
2,071,975	2/1937	Holm-Hansen et al. .	
2,171,248	8/1939	Berkel .	
2,316,836	4/1943	Breuer	55/356 X
2,504,846	4/1950	Kirby .	
2,542,634	2/1951	Davis et al. .	
2,560,728	7/1951	Lee	99/250
2,684,125	7/1954	Brace .	
2,768,707	10/1956	Campbell .	
2,824,335	2/1958	Moffat .	
2,943,698	7/1960	Bishop	55/429 X
3,165,774	1/1965	Barba	15/327.5 X
3,286,446	11/1966	Happe et al.	15/327.5 X
3,308,609	3/1967	McCulloch et al. .	
3,320,727	5/1967	Farley et al. .	
3,331,090	7/1967	Reiber et al.	15/327.5 X
3,425,192	2/1969	Davis .	
4,373,228	2/1983	Dyson .	
4,551,041	11/1985	Coon et al.	406/85
4,571,772	2/1986	Dyson .	
4,593,429	10/1986	Dyson .	
4,645,542	2/1987	Scharton et al.	134/1
4,806,277	2/1989	Sakurai et al.	252/626
4,966,177	10/1990	John, Jr. et al.	134/61
4,974,617	12/1990	Simon	134/22.12
5,078,761	1/1992	Dyson	55/429 X
5,080,697	1/1992	Finke .	

FOREIGN PATENT DOCUMENTS

1159610	1/1984	Canada .
1162362	2/1984	Canada .
1182613	2/1985	Canada .
1238869	7/1988	Canada .
1241158	8/1988	Canada .
44-70008	8/1969	Japan .

OTHER PUBLICATIONS

Canadian Industrial Design Registration No. 54, 488—May 21, 1985, Prototypes Ltd.

Canadian Industrial Design Registration No. 60, 796—May 10, 1988, Iona Appliances Inc.

Brochure by Rotobic Pty. Ltd. for Pocket Vac and Rocket Vac Vacuum Cleaners (undated).

Brochure by Miracle Marketing Corp. for the Optimus Vacuum Cleaner (undated).

Operating instructions for the Megavac Vacuum Cleaner (undated).

One page brochure for the Megavac Vacuum Cleaner (undated).

Operating instructions for the Quarter-Vac Vacuum Cleaner (undated).

Brochure for the Linevacer Vacuum Cleaner (undated).

Brochure for the Pro-Team Quatervac Vacuum Cleaner (undated).

Brochure entitled "The Pro-Team Option" (undated).

Primary Examiner—Chris K. Moore

Attorney, Agent, or Firm—Bereskin & Parr

[57] **ABSTRACT**

A back-pack vacuum cleaner comprises a back-pack harness, an upper casing attached to the harness and a lower casing rotatably mounted on the upper casing. A cyclonic cleaning assembly is mounted within the upper casing such that at least part of the assembly extends into the lower casing. The motor is positioned within the upper casing above the cyclonic cleaning assembly.

20 Claims, 7 Drawing Sheets

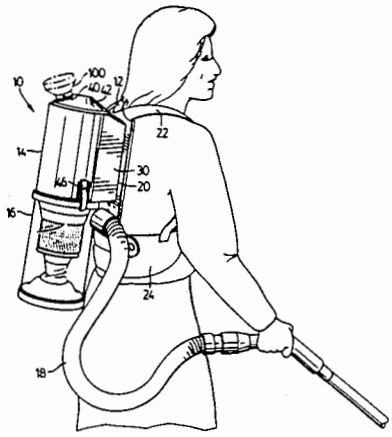

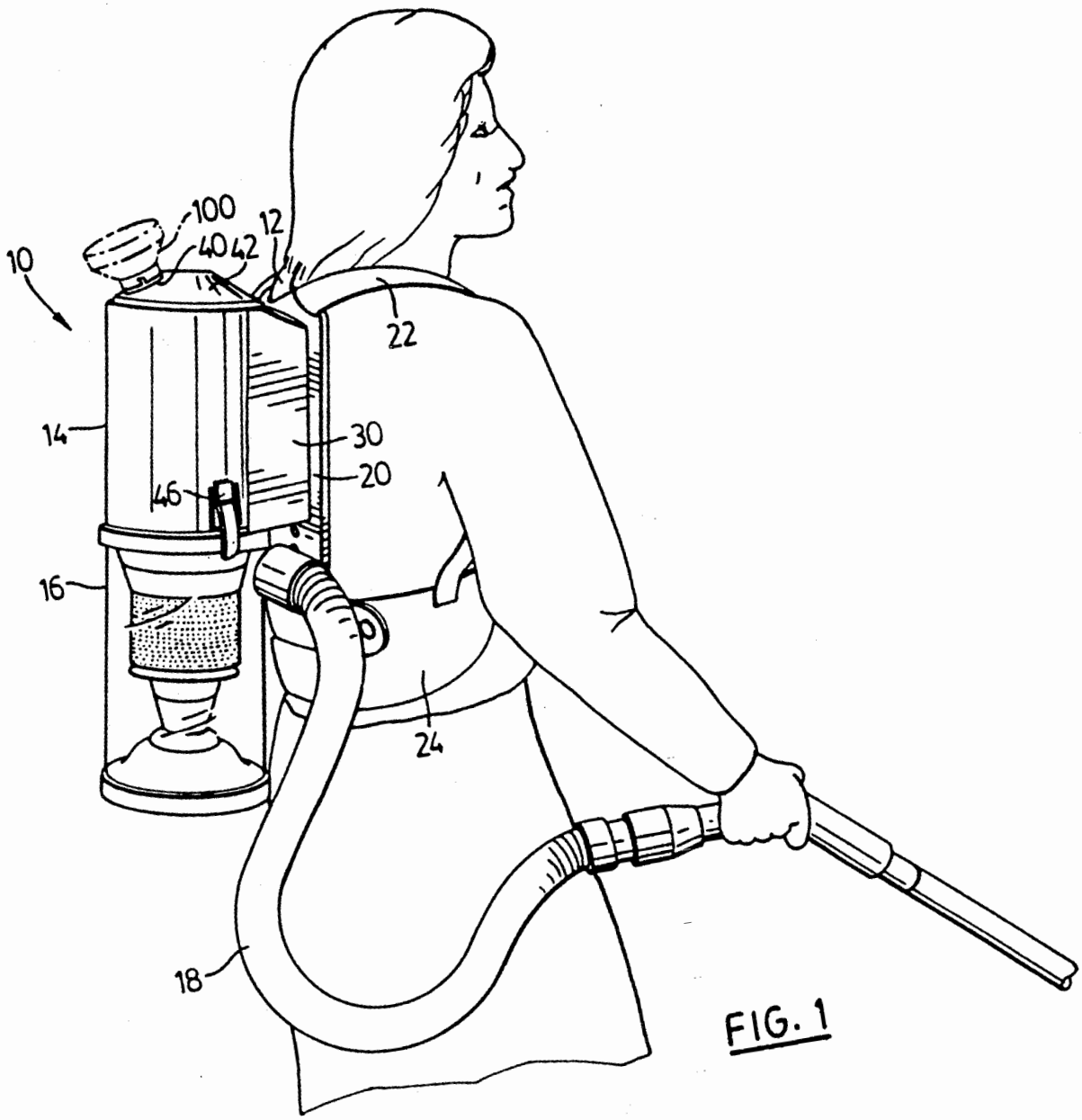

FIG. 1

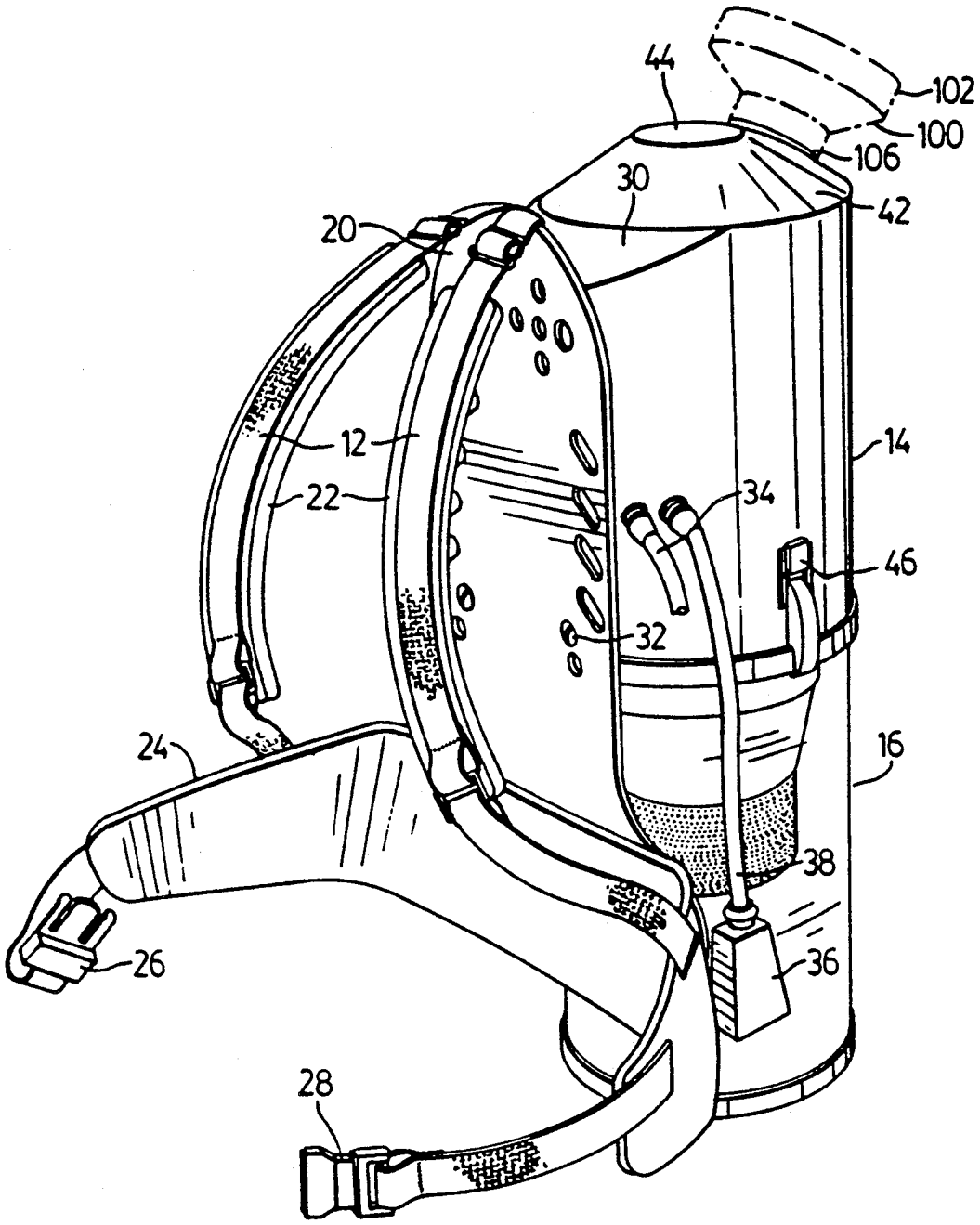

FIG. 2

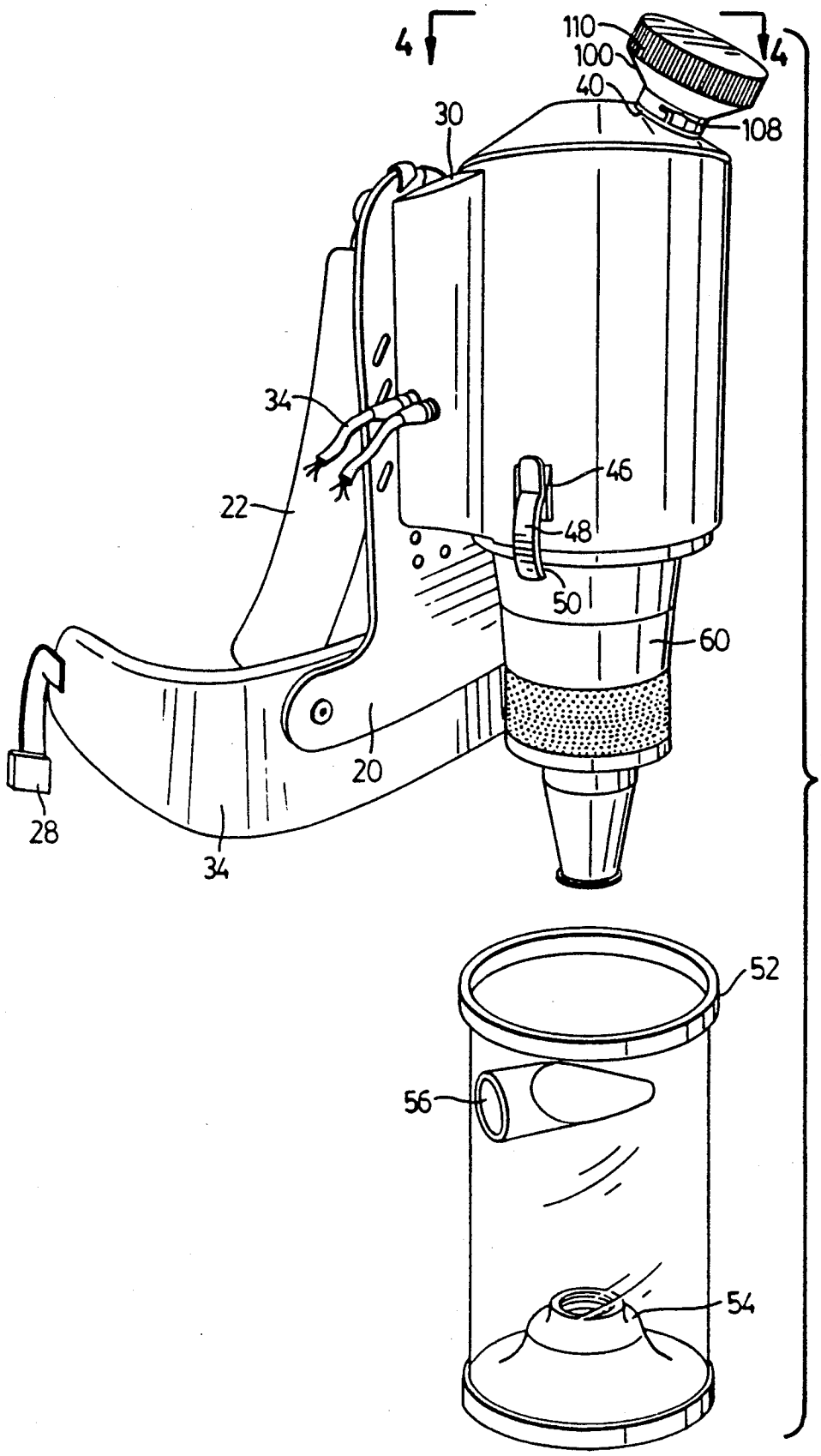

FIG. 3

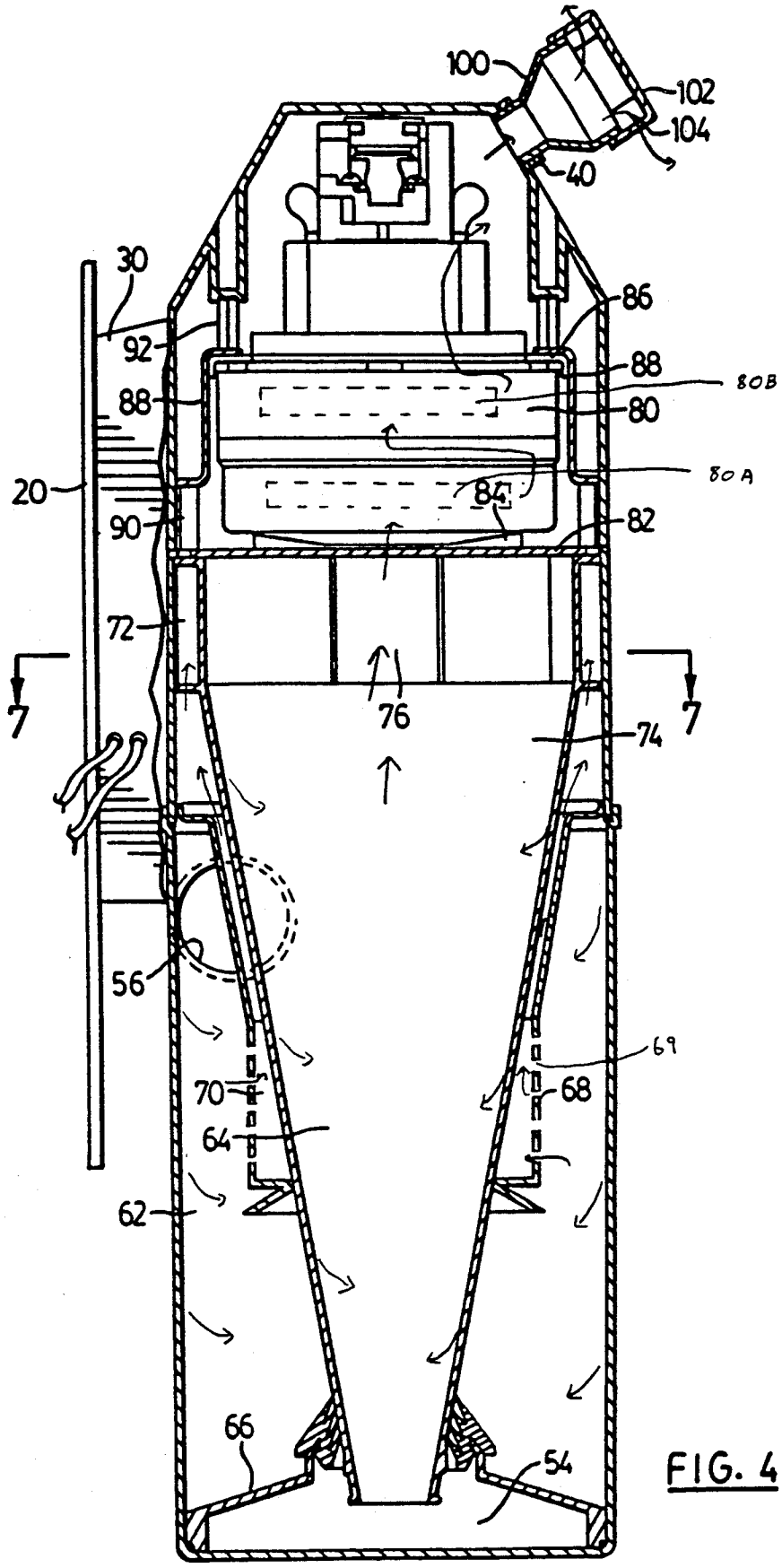
100
102
104
40
30
86
92
88
80B
88
80
80A
20
84
90
82
72
7
76
7
74
56
69
70
68
64
62
66
54

FIG. 4

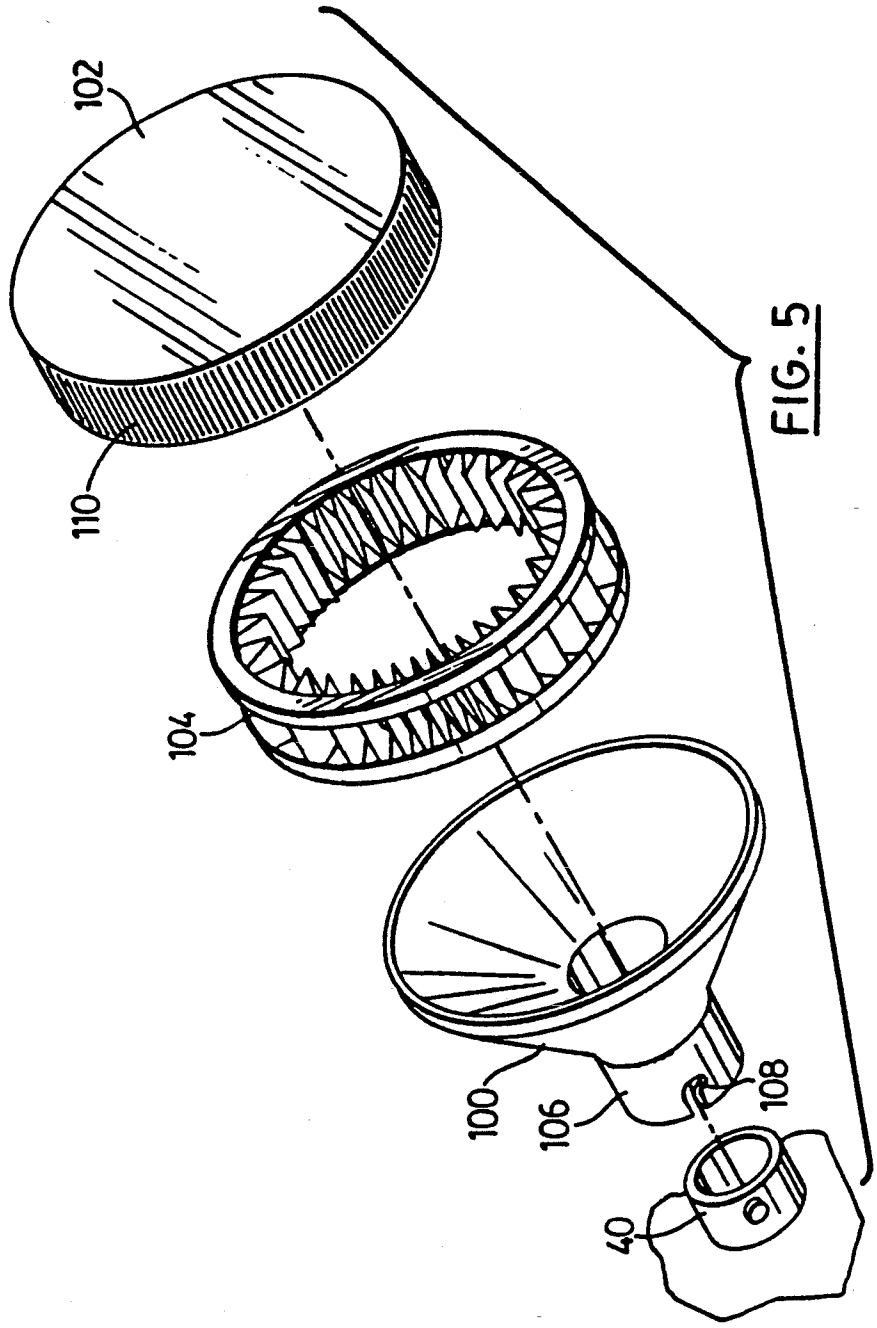

FIG. 5

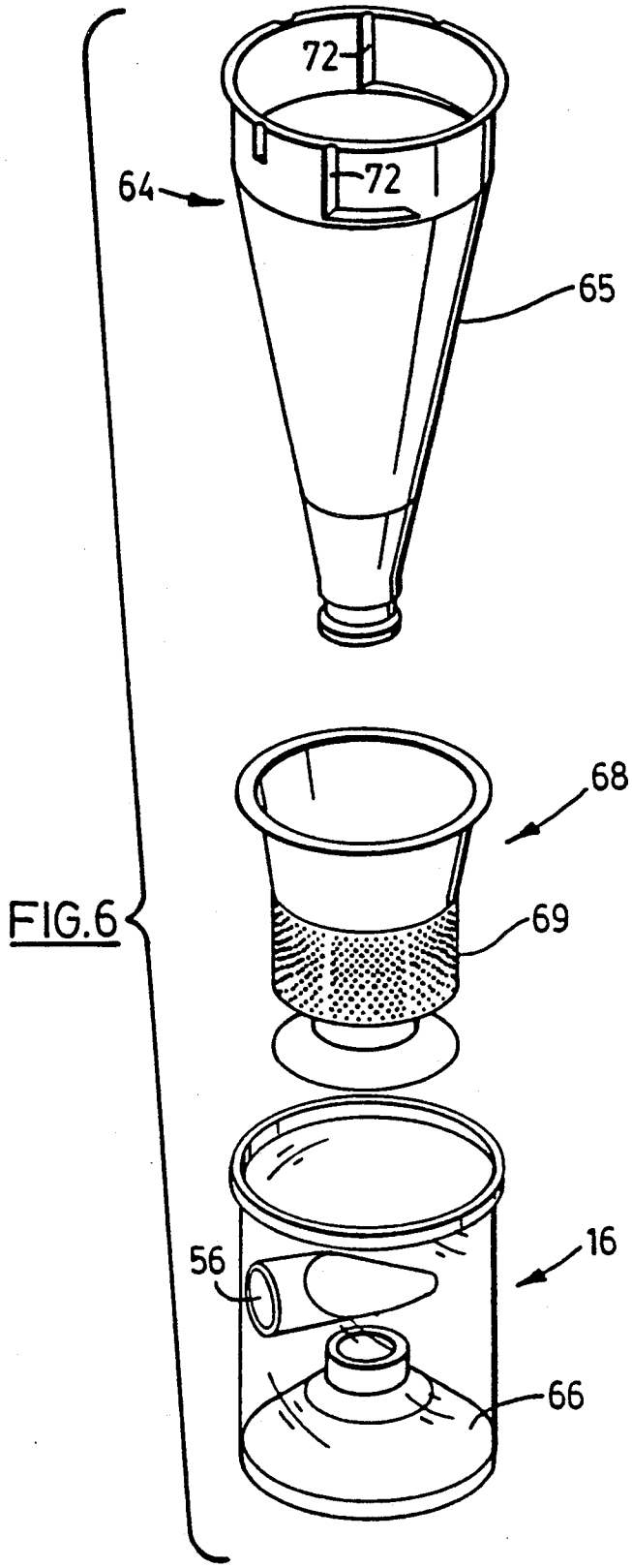

FIG.6

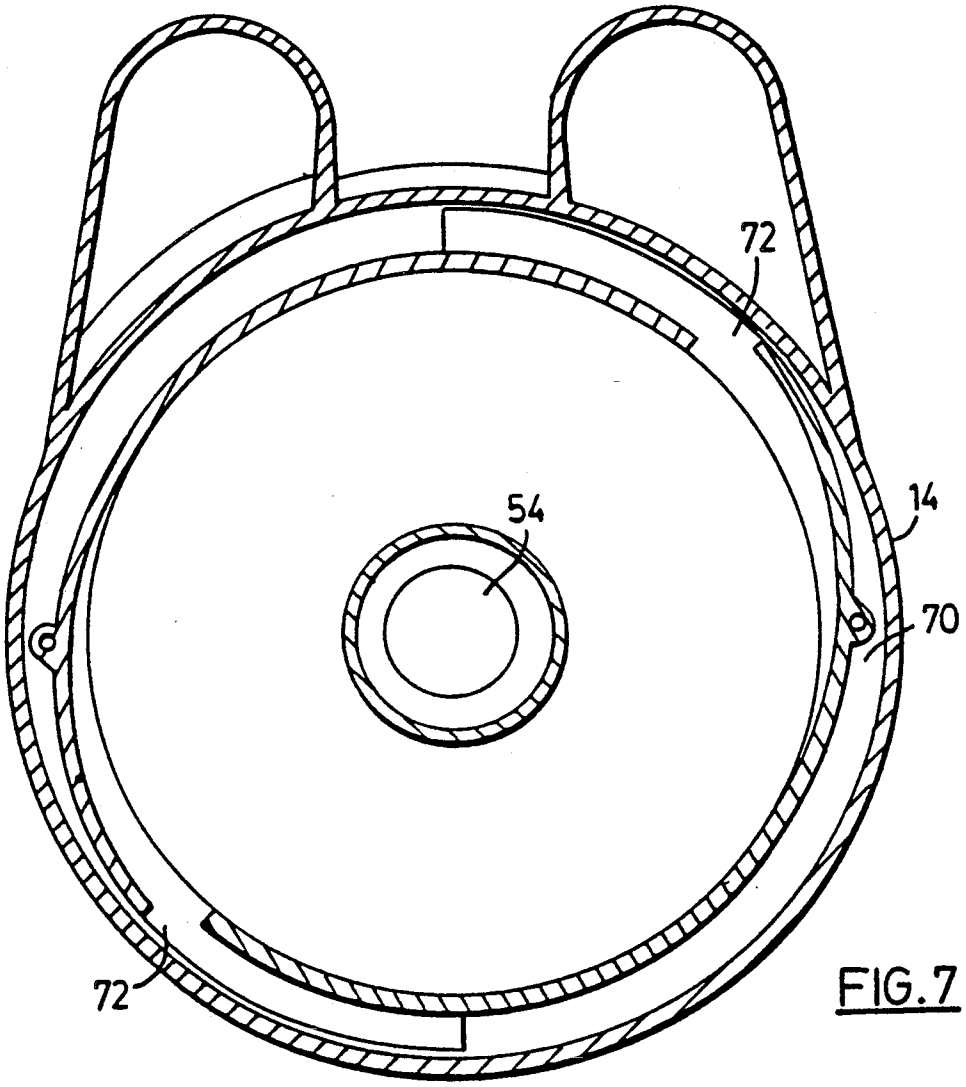

FIG. 7

CYCLONIC BACK-PACK VACUUM CLEANER

This application is a continuation-in-part of U.S. application Ser. No. 07/838,183 filed on Feb. 20, 1992, and now abandoned.

FIELD OF THE INVENTION

The present invention relates to vacuum cleaners which have a harness so that they may be worn as a backpack by the operator. In particular, it relates to vacuum cleaners of the cyclonic type.

BACKGROUND OF THE INVENTION

There are various types of vacuum cleaners including upright vacuum cleaners and canister vacuum cleaners. An upright vacuum cleaner comprises two main sections namely a ground engaging portion mounted on wheels and a dirt collection portion which is pivotably mounted above the ground engaging portion. The ground engaging portion includes a cleaning head and a motor. The dirt collection portion includes a filtration means for separating entrained dirt from the intake air and means for storing the separated dirt.

Canister vacuum cleaners are substantially cylindrical in shape and comprise a rigid outer container and a hose assembly. The rigid outer container is mounted on wheels for ease of movement. The outer container is substantially cylindrical in shape and has a side which is substantially circular in cross-section. The wheels may be mounted either on the side of the container so that the longitudinal axis of the canister extends horizontally or on one end of the canister so that the longitudinal axis of the canister extends vertically. If the unit is horizontally disposed, the hose assemby is mounted on one end of the outer container. A dirt filter and collector, such as a bag, is positioned adjacent that end of the container and a motor is positioned behind the dirt filter and collector. In operation, the dirty air passes through the hose into the dirt filter and collector and the filtered air passes by the motor before exiting the vacuum cleaner. Alternately, when the vacuum cleaner is vertically disposed, the motor is mounted on top of the outer container and the motor and/or the filter means may extend into the outer container. The outer container has an air entry port to which the hose assembly is mounted. In operation, the dirty air passes through the hose into the outer container and is then filtered prior to exiting the machine.

In canister vacuum cleaners a cleaning head is attached to the end of the hose assembly distal to the entry port on the outer container. This design results in a cleaning head which is small and manouverable. However, canister vacuum cleaners have several disadvantages. If the unit is vertically disposed, the dirt will collect in the bottom of the outer container and the air entry port must be located near the upper portion of the outer container. Otherwise, the entry port would become clogged with dirt and this would decrease the efficiency of the vacuum cleaner. The motor and filter mechanism are mounted near the upper portion of the canister vacuum cleaner and accordingly the centre of gravity of the machine is relatively high. In operation, the operator typically moves these machines by pulling on the hose, which is attached to the outer container. The raised centre of gravity of the machine results in the machine being top heavy and prone to tipping. Further, since a friction fit may be used to removably mount the hose assembly in the entry port, it is occasionally necessary for the operator to cease operation and re-insert the hose to maintain a hermetic seal which is loosened by pulling on the hose assembly.

Accordingly, canister machines and in particular vertically disposed canister vacuum cleaners, can most conveniently be used within a circle having a radius somewhat smaller than the length of the hose assembly. Outside such a circle, the machine must be carefully moved from position to position to avoid tipping the machine. These machines are typically awkward to move and care is also required to avoid hitting and damaging walls and furniture.

Upright vacuum cleaners have the advantage that the motor is mounted in the ground engaging portion. Accordingly, the centre of the gravity of the machine is adjacent to the ground and the machines are not prone to tipping. In the past, these machines have typically comprised a filter mechanism which may be a cloth or paper bag. More recently, dual cyclonic upright vacuum cleaners have been developed. These upright machines utilize cyclonic action or centrifugal force to separate the entrained dirt from the intake air. As is shown in Canadian Patent Nos. 1,182,613; 1,238,869 and 1,241,158, and corresponding U.S. Pat. Nos.: 4,593,492; 4,826,515; 4,853,011; 5,160,356; 4,643,748 and 4,571,772, which are incorporated herein by reference, a cyclonic vacuum cleaner may utilize first and second cyclones which are connected in series. The first or outer cyclone is designed to remove the larger and heavier dirt particles which are entrained in the intake air and the second or inner cyclone is used to remove the finer and lighter particles which are entrained in the exhaust air from the first cyclone.

One of the disadvantages with upright vacuum cleaners is that during operation, the entire machine is continually being moved by the operator. This results in the operator becoming tired. Further, the ground engaging portion is relatively large and must be moved with care around furniture and other obstacles. Due to its size, the ground engaging portion may be too large to clean confined spaces. Thus, these machines are often designed to accept a hose assembly so that the upright vacuum cleaner may be used in a canister mode. This results in additional design complexities. Further, the operator must also carry around the hose assembly. These problems are accentuated in a commercial environment where an operator may use a machine for several hours at one time to clean large areas.

Another type of vacuum cleaner is the back-pack vacuum cleaner. Examples of such machines are the QUARTER-VAC, the MEGAVAC, the POCKET VAC, the OPTIMUS 1 and the LINEVACER. These machines have a upper portion which contains a filter bag or other filter medium. The motor is located adjacent the bottom of the vacuum cleaner below the filter means. The hose assembly is connected to the top of the machine so that the intake air passes from the top of the machine through the filter means, past the motor and is then exhausted from the machine.

Back-pack vacuum cleaners have been used in the commercial environment, and accordingly they must be worn by the operator for several hours at a time and, possibly, for an entire shift. Due to the nature of existing designs, these machines feel heavy and uncomfortable and accordingly they are not desirable for extended hours of use.

SUMMARY OF THE INVENTION

It has been found that these disadvantages can be overcome by using a cyclonic vacuum cleaner which comprises a back-pack harness, an upper casing attached to the harness, a lower casing releasably mounted on the upper casing, at least one cyclone mounted with at least the lower part thereof positioned within the lower casing, an air entry means providing an air flow path from outside the vacuum cleaner to the at least one cyclone, an air exit means providing an air flow path from the at least one cyclone to outside the vacuum cleaner and fan means driven by a motor positioned within the upper casing above the at least one cyclone for generating a flow of air which passes through the air entry means, through the at least one cyclone, and through the air exit means.

Preferably, the vacuum cleaner comprises a first cyclone and a second cyclone in series. The incoming air enters the first cyclone and passes from the exit of the first cyclone to the entrance of the second cyclone. The air exits from the second cyclone and preferably is used to cool the motor which is located above the exit from the second cyclone. The air entry means may comprise a port for supplying dirt laden air tangentially to the first cyclone to produce cyclonic rotation of the dirt laden air within the first cyclone. The air entry port may be located near the top of the first cyclone.

The lower casing may comprise the outer wall of the first cyclone and the air entry port may be positioned at the upper portion thereof. The lower casing may be substantially circular in cross-section such that the lower casing may be rotated relative to the upper casing thus permitting the air entry port to be positioned either on the right hand side or the left hand side of the vacuum cleaner to permit ease of use by a right handed operator or a left handed operator.

The air exit means may comprise one port on the upper part of the casing. The exit port may be positioned and configured to direct air flow away from the operator. Further, the exit port may be adapted to receive a hose so that the vacuum cleaner may also be used as a blower. Alternately, or in addition, the exit port may be adapted to receive a filter such that, after passing through said filter, over 99% of 0.3 micrometer size particles have been removed from the incoming dirt laden air.

In contrast to prior vacuum cleaners, this design provides a vacuum cleaner which is ergonomic. The vacuum cleaner is easy to operate and light weight so that it may be worn for an extended period of time by the operator. Further, the vacuum cleaner has an improved filtering mechanism while maintaining a light weight design.

The substance and advantages of the present invention will be more fully and completely described in accordance with following description, and the accompanying drawings, of a preferred embodiment of the invention.

BRIEF DESCRIPTION OF THE INVENTION

FIG. **1** is a perspective view of a vacuum cleaner according to the invention, when worn by an operator;

FIG. **2** is a perspective view of the front of the vacuum cleaner of FIG. **1**;

FIG. **3** is a perspective view from the rear of the vacuum cleaner of FIG. **1** with the lower casing removed;

FIG. **4** is a cross-section along line **4—4** of the vacuum cleaner of FIG. **3**;

FIG. **5** is an exploded view of the after filter shown in FIGS. **1–4**;

FIG. **6** is an exploded view of part of the cyclonic filter means of the vacuum cleaner of FIG. **1**; and,

FIG. **7** is a cross-section on the line **7—7** in FIG. **4**.

DETAILED DESCRIPTION OF PREFERRED EMBODIMENT

As shown in FIG. **1**, vacuum cleaner **10** comprises a harness **12**, an upper casing **14** and a lower casing **16**. The vacuum cleaner is adapted to receive a hose assembly **18**. Hose assembly **18** may be of any desired length and, preferably, is designed to receive a variety of interchangeable cleaning heads as may be required.

The back-pack harness may be of any design known in the art. Harness **12** has a back plate **20**, two shoulder straps **22** and a waist strap **24**. Male and female buckle members **26** and **28** are fixed at the two ends of waist strap **24**. Back plate **20** extends from a point near the top of upper casing **14** to a position adjacent the central portion of lower casing **16**. The back plate is dimensioned and configured so as to be comfortably mounted on the back of the operator. Shoulder straps **22** are individually adjusted by means known in the art to mount the vacuum cleaner at the proper height for each operator. Similarly, waist strap **24** is adjustable so as to fit around the waist of any operator.

In use, the operator may easily put on the vacuum cleaner and adjust it to fit their body. The operator places his arms through shoulder straps **22** and secures waist strap **24** by inserting male buckle member **26** into female buckle member **28**. The shoulder straps and waist straps may then be adjusted to fit the operator.

Upper casing **14** has a side wall which is substantially cylindrical. The upper casing may be attached to the harness by numerous means. As shown in the Figures, two protrusions **30** extend outwardly from a position near the front of cylindrical housing **14**. Back plate **20** may be secured to these protrusions by any means known in the art. As shown in FIG. **2**, back plate **20** is secured to protrusions **30** by means of a plurality of screws **32**.

The electric cord **34** may be attached to upper casing **14** at any desired point. It has been found advantageous to attach electric cord **34** to one of the protrusions **30**. This results in the electrical cord being positioned at a point where it does not interfere with the movement of the hose assembly but where it may be easily grasped by the operator. On/off switch **36** is attached to upper housing **14** by means of control cord **38**. By using a control cord, the vacuum cleaner may easily be turned on and off by the operator while wearing the vacuum cleaner. Similarly, as with the electric cord, the control cord may be attached to the vacuum cleaner at any desired location. Once again, it has been found advantageous to locate control cord **38** on one of protrusions **30**. If desired, an electrical outlet (not shown) may also be provided on protrusion **30**. This would be advantageous if a vacuuming head having an electrically driven motor were to be attached to the vacuum cleaner.

Air exit port **40** is located near the top of upper casing **14**. As shown in FIG. **1**, air exit port **40** is positioned and configured to direct air flow away from the operator. The upper portion of upper casing **14** comprises a bevelled surface **42** and a top **44**. While air exit port **40** is positioned on bevelled surface **42** in the Figures, by

suitably adapting the configuration of the air exit port, the air exit port may be positioned at an alternate location on bevelled surface **42** or on top surface **44**.

Preferably, air exit port **40** is adapted to receive a hose. By this modification, the vacuum cleaner may be transformed into a blower. This expands the potential use of the vacuum cleaner.

The use of dual cyclones in a vacuum cleaner results in a high level of particulate removal from the entrained air, including relatively small particles. However, when used in a toxic environment or in a clean room, the particulate emissions from vacuum cleaners must be exceptionally low, for example in the order of 99.99% of 0.3 micron particles. To meet this requirement, an after-filter may be installed on vacuum cleaner **10**. This may be accomplished by adapting air exit port **40** to receive a filter. Preferably, the filter is positioned external to the upper casing. As shown in FIGS. **3** and **4**, the after filter comprises a conical bottom portion **100**, a top portion **102** and a filter **104**. Bottom portion **100** has a base **106** which is securely attached to air exit port **40**. Due to the pressure which builds up in the filter, the filter must be securely fixed to port **40**. A suitable means of releasably securing the filter to air exit port **40** is by use of a boyonet mount **108**. The exact size and shape of filter **104** will vary depending upon the particular emission standards which are set for use in various instances. However, by the use of an after-filter, it is possible to remove over **99.99%** of **0.3** micron size particles form the dirt laden intake air. As shown in the Figures, filter **104** is in the shape of an annulus. Top portion **102** has a plurality of circumferentially spaced vents **110**. In operation, the air enters through base **106** and passes into the centre of filter **104**. The air passes through filter **104** and exits through vents **110**.

By this modification, an after-filter may easily be added when required. The after-filter is a high efficiency and, preferably, high air flow filter. An example of a suitable filter material is HEPA or ULPA brand filter media. This material is an expensive synthetic material. By positioning the filter after the dual cyclones, the exhaust air has been substantially cleaned by the time it reaches the filter. This greatly increases the filter life. Further, the filter will act to an extent as a muffler to decrease the noise from the motor.

Lower casing **16** is releasably mounted on upper casing **14** by any means known in the art which provides a hermetic seal. In the preferred embodiment, latches **46** are provided adjacent the lower portion of upper casing **14**. One latch may be positioned on either side of upper casing **14**. Each latch **46** has an arm **48** which is pivotably mounted to the upper casing **14**. The distal end of each arm **48** has a hook **50**. This hook is designed to engage with rim **52** of lower housing **16**. When lower casing **16** is mounted on upper casing **14**, latches **46**, in conjunction with rim **52**, result in an air tight seal which avoids any pressure drop in the cyclone chambers.

Lower casing **16** has a receiving chamber **54** positioned adjacent its lower portion **66**. Further, air entry port **56** is positioned adjacent the upper portion of lower casing **16**. Air entry port **56** is configured to supply dirt laden air tangentially to the interior surface of lower casing **16**. Air entry port **56** is configured to receive hose assembly **18**.

Since air entry port **56** is positioned on lower casing **16**, the air entry port may be positioned either on the left hand side or the right hand side of the unit simply by rotating lower casing **16** relative to upper casing **14** prior to engaging latches **46**. By this adjustment, the vacuum cleaner may be used either by a right handed operator or a left handed operator.

The vacuum cleaner has a cyclonic cleaning assembly. Cyclone assembly **60** is mounted on upper casing **16** such that at least the lower part of the assembly is positioned within the lower casing **16**. Preferably, as shown in FIG. **3** substantially all of cyclone assembly **60** is positioned within lower casing **16**. Cyclone assembly **60** may be of any cyclone design which is known in the art of vacuum cleaners and comprises at least one cyclone. Preferably, the cyclone assembly comprises a first cyclone chamber and a second cyclone chamber in series and, for compactness, it is preferred to have the two cyclones mounted coaxially as shown in FIG. **4**. Referring to FIG. **4**, the first cyclone chamber is denoted by reference numeral **62** and the second cyclone chamber is denoted by reference numeral **64** and has an outer wall **65**. The air enters the vacuum cleaner via air entry port **56**. A centrifugal force is applied to the dirt laden air causing the dirt laden air to rotate within first cyclone chamber **62**. The larger and heavier dirt is deposited in the lower portion of lower casing **16** (denoted by reference numeral **66**). The air exits from the first cyclone chamber via first cyclone air exit **68** to passage **70**. As shown in FIG. **3**, first cyclone air exit **68** has a plurality of perforations **69** through which the partially cleaned air passes. Passage **70** is an annular passage defined by first cyclone air exit **68** and outer wall **65**. The air travels through passage **70** to second air entry port **72**. Second air entry port **72** imparts a tangential flow to the air causing the air to circulate in a cyclonic pattern within second cyclone chamber **74**. The finer dirt particles are deposited in receiving chamber **54** and the cleaned air is evacuated from the second cyclone chamber through second cyclone air exit **76**.

Motor **80** having a fan means comprising an impeller or the like for generating an air flow is positioned within upper casing **14** above the cyclone chambers. Motor **80** may be mounted to upper casing **14** by any means known in the art which dampens vibrations from the motor. As shown in FIG. **4**, a plate **82**, which is part of the upper casing, is positioned on top of the cyclone chambers. The plate seals the cyclone chambers to prevent any pressure drop. Second cyclone air exit **76** is positioned at the centre of plate **82**. Rubber gasket **84** is positioned above plate **82**. Motor **80** is then positioned on top of rubber gasket **84**. The gasket prevents air leakage between the motor and cyclone air exit **76** and provides shock absorbing so as to dampen vibration from the motor. Cap **86** is placed on top of the motor and the entire assembly is secured into place by means of z-shaped clamp **88**. Clamp **88** is secured to upper casing **14** by means of lower screw posts **90** and upper screw posts **92**.

As shown in FIG. **4**, motor **80** has two impellers generally designated by reference numerals **80A** and **80B**. The impellers are driven by motor **80** and generate an air flow. The air exits the second cyclone at second cyclone air exit **76** and enters the motor. The air passes by first impeller **80A** and is then directed to second impeller **80B** prior to exiting the motor and, from there, the vacuum cleaner through air exit port **40**.

In operation, motor **80** drives a fan which generates an air flow which causes air to pass from a cleaning head or hose which is attached to air entry port **56** through air entry port **56**, through the first cyclone

chamber **62**, via perforations **69** through first cyclone air exit **68**, through passage **70** to second air entry port **72**, through second cyclone chamber **74**, out second cyclone air exit **76**, past motor **80** and out port **40** as generally represented by the arrows in FIG. **4**.

This configuration provides several advantages. First, by locating the motor at the top of the vacuum cleaner, the ergonomics are substantially improved. It has surprisingly been found that the use of this configuration provides a vacuum cleaner which feels very light weight and comfortable to the operator. This is achieved in part by mounting the motor at the top contrary to what has been utilized in previous designs. With the bulk of the mass of the vacuum cleaner (the motor) at the top, the unit is more securely held to the operator's back and tends to swing less and have less free motion than if the motor were at the bottom. This design results in the motor being substantially closer to the operator's ears than those utilized in previous designs. Despite this closeness, it has also surprisingly been found that the design is relatively quiet and may be used for extended periods of time without the need to apply expensive sound absorbing insulation to the upper casing. The sound level can be further reduced, as mentioned, by using a filter at air exit **40**. Further, by positioning motor **80** directly above second cyclone air exit **76**, the clean air may be used to cool the motor.

We claim:

1. A cyclonic vacuum cleaner comprising:

(a) a back pack harness;

(b) an upper casing attached to said harness;

(c) a lower casing releasably mounted on said upper casing;

(d) at least one cyclone having a lower part and an air exit port, said cyclone being mounted with at least said lower part positioned within said lower casing;

(e) an air entry means providing an air flow path from outside said vacuum cleaner to said at least one cyclone;

(f) air exit means providing an air flow path from said at least one cyclone to outside said vacuum cleaner; and,

(g) fan means driven by a motor positioned within said upper casing above said at least one cyclone for generating an air flow which passes through said air entry means, through said at least one cyclone and through said air exit means.

2. A cyclonic vacuum cleaner as claimed in claim **1** wherein said air entry means comprises an entry port for supplying dirt laden air tangentially to said at least one cyclone to produce cyclonic rotation of said air within said at least one cyclone, said port being located near the top of said at least one cyclone and adapted to receive a hose assembly.

3. A cyclonic vacuum cleaner as claimed in claim **2** wherein the top of said lower casing is located near the top of said at least one cyclone and said port is provided in said lower casing.

4. A cyclonic vacuum cleaner as claimed in claim **3** wherein said lower casing is substantially circular in cross section and comprises the outer wall of the first of said at least one cyclone such that the lower casing may be mounted onto said upper casing with said port positioned to the right or the left of said harness for use by a right or a left handed user.

5. A cyclonic vacuum cleaner as claimed in claim **1**, wherein said motor is positioned in the air flow path from said at least one cyclone to outside said vacuum cleaner.

6. A cyclonic vacuum cleaner as claimed in claim **5**, wherein said motor is positioned above the air exit port from said at least one cyclone, and said air exit means comprises an exit port on the upper portion of said upper casing.

7. A cyclonic vacuum cleaner as claimed in claim **6**, wherein the air from the air exit port from said at least one cyclone cools said motor prior to passing through said exit port.

8. A cyclonic vacuum cleaner as claimed in claim **7**, wherein said exit port of said upper casing is positioned and configured to direct air flow away from the operator.

9. A cyclonic vacuum cleaner as claimed in claim **6**, wherein said exit port of said upper casing is adapted to receive a hose so that said vacuum cleaner may also be used as a blower.

10. A cyclonic vacuum cleaner as claimed in claim **6**, wherein said exit port of said upper casing is adapted to receive a filter.

11. A cyclonic vacuum cleaner as claimed in claim **6**, and including a filter positioned external to said upper casing over said exit port of said upper casing.

12. A cyclonic vacuum cleaner as claimed in claim **1** wherein said at least one cyclone comprises a first cyclone and a second cyclone in series.

13. A cyclonic vacuum cleaner as claimed in claim **12** wherein said first cyclone and said second cyclone are mounted coaxially in said vacuum cleaner.

14. A cyclonic vacuum cleaner as claimed in claim **13**, wherein said air exit port is the exit from said second cyclone and said motor is positioned in the air flow path from the exit of said second cyclone to outside said vacuum cleaner.

15. A cyclonic vacuum cleaner as claimed in claim **1** wherein said back pack harness comprises a back plate having a lower portion, two shoulder straps each of which has first and second ends and a waist strap attached to said lower portion of said back plate, said first end of each of said shoulder straps being attached to said back plate and said second end of each of said shoulder straps each being attached to said waist strap.

16. A cyclonic vacuum cleaner comprises:

(a) a back pack harness;

(b) an upper casing attached to said harness;

(c) a lower casing releasably mounted on said upper casing;

(d) first and second coaxially positioned cyclones having a lower part, said second cyclone being mounted within said first cyclone, said second cyclone having a cyclone exit port, said cyclones being mounted with at least said lower part positioned within said lower casing, said coaxial cyclones mounted so that dirt laden air will enter the first outer cyclone and then the second inner cyclone before exiting through said cyclone exit port;

(e) an air entry port positioned on said lower casing for supplying dirt laden air tangentially to said outer cyclone to produce cyclonic rotation of said air within said outer cyclone, said port being located near the top of said outer cyclone and adapted to receive a hose assembly;

(f) an air exit port provided on said upper casing; and,

(g) fan means driven by a motor positioned within said upper casing above said cyclones for generating an air flow which passes through said air entry

port, said outer cyclone, said inner cyclone, said cyclone exit port, past said motor and out said air exit port.

17. A cyclonic vacuum cleaner as claimed in claim **16** wherein said lower casing is substantially circular in cross section and comprises the outer wall of said first cyclone such that the lower casing may be mounted onto said upper casing with said port positioned to the right or the left of said harness for use by a right or a left handed user.

18. A cyclonic vacuum cleaner as claimed in claim **17** wherein said motor is positioned between the cyclone exit port and said air exit port so that the air from the exit from the second cyclone cools said motor before passing through said air exit port.

19. A cyclonic vacuum cleaner as claimed in claim **18**, and including a filter positioned external to said upper casing over said exit port of said casing.

20. A cyclonic vacuum cleaner as claimed in claim **18** wherein said back pack harness comprises a back plate having a lower portion, two shoulder straps each of which has first and second ends and a waist strap attached to said lower portion of said back plate, said first end of each of said shoulder straps being attached to said back plate and said second end of each of said shoulder straps each being attached to said waist strap.

* * * * *