US009545181B2

(12) **United States Patent**
Conrad

(10) **Patent No.: US 9,545,181 B2**
(45) **Date of Patent: Jan. 17, 2017**

(54) **SURFACE CLEANING APPARATUS**

(71) Applicant: **Omachron Intellectual Property Inc.**, Hampton (CA)

(72) Inventor: **Wayne Ernest Conrad**, Hampton (CA)

(73) Assignee: **Omachron Intellectual Property Inc.**, Hampton, Ontario (CA)

(*) Notice: Subject to any disclaimer, the term of this patent is extended or adjusted under 35 U.S.C. 154(b) by 0 days.

(21) Appl. No.: **14/875,381**

(22) Filed: **Oct. 5, 2015**

(65) **Prior Publication Data**

US 2016/0066755 A1 Mar. 10, 2016

Related U.S. Application Data

(60) Continuation of application No. 13/782,217, filed on Mar. 1, 2013, now Pat. No. 9,192,269, which is a continuation-in-part of application No. 13/720,754, filed on Dec. 19, 2012, now Pat. No. 8,752,239, which is a division of application No. 11/954,331, filed on Dec. 12, 2007, now Pat. No. 8,359,705.

(60) Provisional application No. 60/870,175, filed on Dec. 15, 2006, provisional application No. 60/884,767, filed on Jan. 12, 2007.

(51) **Int. Cl.**

A47L 9/00	(2006.01)
A47L 9/16	(2006.01)
A47L 5/22	(2006.01)
A47L 9/32	(2006.01)
A47L 5/24	(2006.01)
A47L 5/36	(2006.01)
A47L 9/28	(2006.01)

(52) **U.S. Cl.**

CPC ***A47L 9/1641*** (2013.01); ***A47L 5/225*** (2013.01); ***A47L 5/24*** (2013.01); ***A47L 5/36*** (2013.01); ***A47L 9/009*** (2013.01); ***A47L 9/16*** (2013.01); ***A47L 9/1683*** (2013.01); ***A47L 9/2868*** (2013.01); ***A47L 9/2884*** (2013.01); ***A47L 9/322*** (2013.01)

(58) **Field of Classification Search**

USPC 15/329, 353, 410

See application file for complete search history.

(56) **References Cited**

U.S. PATENT DOCUMENTS

911,258	A	2/1909	Neumann
1,600,762	A	9/1926	Hawley
1,797,812	A	3/1931	Waring
1,898,608	A	2/1933	Alexander

(Continued)

FOREIGN PATENT DOCUMENTS

AU	112778	4/1940
CA	1077412 A1	5/1980

(Continued)

OTHER PUBLICATIONS

International Preliminary Report on Patentability, dated Sep. 16, 2008 for International application No. PCT/CA2007/000380.

(Continued)

Primary Examiner — Joseph J Hail
Assistant Examiner — Shantese McDonald
(74) *Attorney, Agent, or Firm* — Philip C. Mendes da Costa; Bereskin & Parr LLP/S.E.N.C.R.L., s.r.l.

(57) **ABSTRACT**

A portable surface cleaning apparatus is removably mounted from a wheeled base. The portable surface cleaning apparatus is provided with an energy storage member and a suction motor.

27 Claims, 18 Drawing Sheets

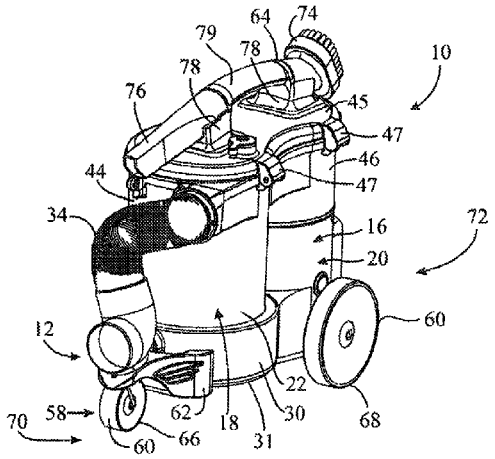

(56) **References Cited**

U.S. PATENT DOCUMENTS

1,937,765 A 12/1933 Leathers
2,015,464 A 9/1935 Saint
2,152,114 A 3/1939 Van Tongeren
2,542,634 A 2/1951 Davis et al.
2,678,110 A 5/1954 Madsen
2,731,102 A 1/1956 James
2,811,219 A 10/1957 Wenzl
2,846,024 A 8/1958 Bremi
2,913,111 A 11/1959 Rogers
2,917,131 A 12/1959 Evans
2,937,713 A 5/1960 Stephenson et al.
2,942,691 A 6/1960 Dillon
2,942,692 A 6/1960 Benz
2,946,451 A 7/1960 Culleton
2,952,330 A 9/1960 Winslow
2,981,369 A 4/1961 Yellott et al.
3,032,954 A 5/1962 Racklyeft
3,085,221 A 4/1963 Kelly
3,130,157 A 4/1964 Kelsall et al.
3,200,568 A 8/1965 McNeil
3,204,772 A 9/1965 Ruxton
3,217,469 A 11/1965 Eckert
3,269,097 A 8/1966 German
3,320,727 A 5/1967 Farley et al.
3,372,532 A 3/1968 Campbell
3,426,513 A 2/1969 Bauer
3,518,815 A 7/1970 Peterson et al.
3,530,649 A 9/1970 Porsch et al.
3,543,325 A 12/1970 Hamrick et al.
3,561,824 A 2/1971 Homan
3,582,616 A 6/1971 Wrob
3,675,401 A 7/1972 Cordes
3,684,093 A 8/1972 Kono
3,822,533 A 7/1974 Oranje
3,898,068 A 8/1975 McNeil et al.
3,933,450 A 1/1976 Percevaut
3,988,132 A 10/1976 Oranje
3,988,133 A 10/1976 Schady
4,097,381 A 6/1978 Ritzler
4,187,088 A 2/1980 Hodgson
4,218,805 A 8/1980 Brazier
4,236,903 A 12/1980 Malmsten
4,307,485 A 12/1981 Dessig
4,373,228 A 2/1983 Dyson
4,382,804 A 5/1983 Mellor
4,409,008 A 10/1983 Solymes
4,486,207 A 12/1984 Baillie
4,494,270 A 1/1985 Ritzau et al.
4,523,936 A 6/1985 Disanza, Jr.
4,678,588 A 7/1987 Shortt
4,700,429 A 10/1987 Martin et al.
4,744,958 A 5/1988 Pircon
4,778,494 A 10/1988 Patterson
4,826,515 A 5/1989 Dyson
D303,173 S 8/1989 Miyamoto et al.
4,853,008 A 8/1989 Dyson
4,853,011 A 8/1989 Dyson
4,853,111 A 8/1989 MacArthur et al.
4,905,342 A 3/1990 Ataka
4,944,780 A 7/1990 Usmani
5,078,761 A 1/1992 Dyson
5,080,697 A 1/1992 Finke
5,090,976 A 2/1992 Dyson
5,129,125 A 7/1992 Gamou et al.
5,224,238 A 7/1993 Bartlett
5,230,722 A 7/1993 Yonkers
5,254,019 A 10/1993 Noschese
5,267,371 A 12/1993 Solerm et al.
5,287,591 A 2/1994 Rench et al.
5,307,538 A 5/1994 Rench et al.
5,309,600 A * 5/1994 Weaver A47L 5/00 15/323
5,309,601 A 5/1994 Hampton et al.
5,347,679 A 9/1994 Saunders et al.
5,363,535 A 11/1994 Rench et al.
5,481,780 A 1/1996 Daneshvar
5,515,573 A 5/1996 Frey
5,599,365 A 2/1997 Alday et al.
D380,033 S 6/1997 Masterton et al.
5,709,007 A 1/1998 Chiang
5,755,096 A 5/1998 Holleyman
5,815,878 A 10/1998 Murakami et al.
5,815,881 A 10/1998 Sjogreen
5,858,038 A 1/1999 Dyson et al.
5,858,043 A 1/1999 Geise
5,893,938 A 4/1999 Dyson et al.
5,935,279 A 8/1999 Kilstroem
5,950,274 A 9/1999 Kilstrom
5,970,572 A 10/1999 Homas
6,071,095 A 6/2000 Verkaar
6,071,321 A 6/2000 Trapp et al.
6,080,022 A 6/2000 Shaberman et al.
6,122,796 A 9/2000 Downham et al.
6,210,469 B1 4/2001 Tokar
6,221,134 B1 4/2001 Conrad et al.
6,228,260 B1 5/2001 Conrad et al.
6,231,645 B1 5/2001 Conrad et al.
6,251,296 B1 6/2001 Conrad et al.
6,260,234 B1 7/2001 Wright et al.
6,345,408 B1 2/2002 Nagai et al.
6,406,505 B1 6/2002 Oh et al.
6,434,785 B1 8/2002 Vandenbelt et al.
6,440,197 B1 8/2002 Conrad et al.
6,502,278 B2 1/2003 Oh et al.
6,519,810 B2 2/2003 Kim
6,531,066 B1 3/2003 Saunders et al.
6,553,612 B1 4/2003 Dyson et al.
6,553,613 B2 4/2003 Onishi et al.
6,560,818 B1 5/2003 Hasko
6,581,239 B1 6/2003 Dyson et al.
6,599,338 B2 7/2003 Oh et al.
6,599,350 B1 7/2003 Rockwell et al.
6,613,316 B2 9/2003 Sun et al.
6,623,539 B2 9/2003 Lee et al.
6,625,845 B2 9/2003 Matsumoto et al.
6,640,385 B2 11/2003 Oh et al.
6,648,934 B2 11/2003 Choi et al.
6,712,868 B2 3/2004 Murphy et al.
6,732,403 B2 5/2004 Moore et al.
6,746,500 B1 6/2004 Park et al.
6,782,583 B2 8/2004 Oh
6,782,585 B1 8/2004 Conrad et al.
6,810,558 B2 11/2004 Lee
6,818,036 B1 11/2004 Seaman
6,833,015 B2 12/2004 Oh et al.
6,868,578 B1 3/2005 Kasper
6,874,197 B1 4/2005 Conrad
6,896,719 B2 5/2005 Coates et al.
6,929,516 B2 8/2005 Brochu et al.
6,968,596 B2 11/2005 Oh et al.
6,976,885 B2 12/2005 Lord
7,113,847 B2 9/2006 Chmura et al.
7,128,770 B2 10/2006 Oh et al.
7,160,346 B2 1/2007 Park
7,162,770 B2 1/2007 Davidshofer
7,175,682 B2 2/2007 Nakai et al.
7,198,656 B2 4/2007 Takemoto et al.
7,222,393 B2 5/2007 Kaffenberger et al.
7,272,872 B2 9/2007 Choi
7,278,181 B2 10/2007 Harris et al.
7,341,611 B2 3/2008 Greene et al.
7,354,468 B2 4/2008 Arnold et al.
7,370,387 B2 5/2008 Walker et al.
7,377,007 B2 * 5/2008 Best A47L 5/225 15/329
7,377,953 B2 5/2008 Oh
7,386,915 B2 6/2008 Blocker et al.
7,395,579 B2 7/2008 Oh
7,426,768 B2 9/2008 Peterson et al.
7,429,284 B2 9/2008 Oh
7,448,363 B1 11/2008 Rasmussen et al.
7,449,040 B2 11/2008 Conrad et al.
7,485,164 B2 2/2009 Jeong et al.
7,488,363 B2 2/2009 Jeong et al.

(56) **References Cited**

U.S. PATENT DOCUMENTS

7,547,337	B2	6/2009	Oh
7,547,338	B2	6/2009	Kim et al.
7,563,298	B2	7/2009	Oh
7,588,616	B2	9/2009	Conrad et al.
7,597,730	B2	10/2009	Yoo et al.
7,628,831	B2	12/2009	Gomiciaga-Pereda et al.
7,740,676	B2	6/2010	Burnham et al.
7,770,256	B1	8/2010	Fester
7,776,120	B2	8/2010	Conrad
7,779,506	B2	8/2010	Kang et al.
7,803,207	B2	9/2010	Conrad
7,805,804	B2	10/2010	Loebig
7,811,349	B2	10/2010	Nguyen
7,867,308	B2	1/2011	Conrad
7,922,794	B2	4/2011	Morphey
7,931,716	B2	4/2011	Oakham
7,938,871	B2	5/2011	Lloyd
7,979,959	B2	7/2011	Courtney
8,021,453	B2	9/2011	Howes
8,062,398	B2	11/2011	Luo et al.
8,117,712	B2	2/2012	Dyson et al.
8,146,201	B2	4/2012	Conrad
8,151,407	B2	4/2012	Conrad
8,152,877	B2	4/2012	Greene
8,156,609	B2	4/2012	Milne et al.
8,161,599	B2	4/2012	Griffith et al.
8,225,456	B2	7/2012	Håkan et al.
8,484,799	B2	7/2013	Conrad
8,673,487	B2	3/2014	Churchill
9,192,269	B2	11/2015	Conrad
2002/0011050	A1	1/2002	Hansen et al.
2002/0011053	A1	1/2002	Oh
2002/0062531	A1	5/2002	Oh
2002/0088208	A1	7/2002	Lukac et al.
2002/0112315	A1	8/2002	Conrad
2002/0134059	A1	9/2002	Oh
2002/0178535	A1	12/2002	Oh et al.
2002/0178698	A1	12/2002	Oh et al.
2002/0178699	A1	12/2002	Oh
2003/0046910	A1	3/2003	Lee
2003/0066273	A1	4/2003	Choi et al.
2003/0106180	A1	6/2003	Tsen
2003/0159238	A1	8/2003	Oh
2003/0159411	A1	8/2003	Hansen et al.
2003/0200736	A1	10/2003	Ni
2004/0010885	A1	1/2004	Hitzelberger et al.
2004/0025285	A1	2/2004	McCormick et al.
2004/0088817	A1*	5/2004	Cochran A47L 5/14 15/327.5
2004/0216264	A1	11/2004	Shaver et al.
2005/0081321	A1	4/2005	Milligan et al.
2005/0115409	A1	6/2005	Conrad
2005/0132528	A1	6/2005	Yau
2005/0198769	A1	9/2005	Lee et al.
2005/0198770	A1	9/2005	Jung et al.
2005/0252179	A1	11/2005	Oh et al.
2005/0252180	A1	11/2005	Oh et al.
2006/0037172	A1	2/2006	Choi
2006/0042206	A1	3/2006	Arnold et al.
2006/0090290	A1	5/2006	Lau
2006/0123590	A1	6/2006	Fester et al.
2006/0137304	A1	6/2006	Jeong et al.
2006/0137306	A1	6/2006	Jeong et al.
2006/0137309	A1	6/2006	Jeong et al.
2006/0137314	A1	6/2006	Conrad et al.
2006/0156508	A1	7/2006	Khalil
2006/0162298	A1	7/2006	Oh et al.
2006/0162299	A1	7/2006	North
2006/0168922	A1	8/2006	Oh
2006/0168923	A1	8/2006	Lee et al.
2006/0207055	A1	9/2006	Ivarsson et al.
2006/0207231	A1	9/2006	Arnold
2006/0230715	A1	10/2006	Oh et al.
2006/0230723	A1	10/2006	Kim et al.
2006/0230724	A1	10/2006	Han et al.
2006/0236663	A1	10/2006	Oh
2006/0254226	A1	11/2006	Jeon
2006/0278081	A1	12/2006	Han et al.
2006/0288516	A1	12/2006	Sawalski
2007/0067944	A1	3/2007	Kitamura
2007/0077810	A1	4/2007	Gogel
2007/0079473	A1	4/2007	Min
2007/0079585	A1	4/2007	Oh et al.
2007/0095028	A1	5/2007	Kim
2007/0095029	A1	5/2007	Min
2007/0209334	A1	9/2007	Conrad
2007/0209335	A1	9/2007	Conrad
2007/0271724	A1	11/2007	Hakan et al.
2007/0289089	A1	12/2007	Yacobi
2007/0289266	A1	12/2007	Oh
2008/0040883	A1	2/2008	Beskow et al.
2008/0047091	A1	2/2008	Nguyen
2008/0134460	A1	6/2008	Conrad
2008/0134462	A1	6/2008	Jansen et al.
2008/0178416	A1	7/2008	Conrad
2008/0178420	A1	7/2008	Conrad
2008/0190080	A1	8/2008	Oh et al.
2008/0196194	A1	8/2008	Conrad
2008/0301903	A1	12/2008	Cunningham et al.
2009/0100633	A1	4/2009	Bates et al.
2009/0113659	A1	5/2009	Jeon
2009/0144932	A1	6/2009	Yoo
2009/0165431	A1	7/2009	Oh
2009/0205160	A1	8/2009	Conrad
2009/0205161	A1	8/2009	Conrad
2009/0205298	A1	8/2009	Hyun et al.
2009/0209666	A1	8/2009	Hellberg et al.
2009/0265877	A1	10/2009	Dyson et al.
2009/0282639	A1	11/2009	Dyson et al.
2009/0300874	A1	12/2009	Tran et al.
2009/0300875	A1	12/2009	Inge et al.
2009/0307564	A1	12/2009	Vedantham et al.
2009/0307863	A1	12/2009	Milne et al.
2009/0307864	A1	12/2009	Dyson
2009/0308254	A1	12/2009	Oakham
2009/0313958	A1	12/2009	Gomiciaga-Pereda et al.
2009/0313959	A1	12/2009	Gomiciaga-Pereda et al.
2010/0083459	A1	4/2010	Beskow et al.
2010/0132319	A1	6/2010	Ashbee et al.
2010/0154150	A1	6/2010	McLeod
2010/0175217	A1	7/2010	Conrad
2010/0212104	A1	8/2010	Conrad
2010/0224073	A1	9/2010	Oh et al.
2010/0229321	A1	9/2010	Dyson et al.
2010/0229328	A1	9/2010	Conrad
2010/0242210	A1	9/2010	Conrad
2010/0243158	A1	9/2010	Conrad
2010/0293745	A1	11/2010	Coburn
2010/0299865	A1	12/2010	Conrad
2010/0299866	A1	12/2010	Conrad
2011/0023261	A1	2/2011	Proffitt, II et al.
2011/0146024	A1	6/2011	Conrad
2011/0168332	A1	7/2011	Bowe et al.
2012/0060322	A1	3/2012	Simonelli et al.
2012/0216361	A1	8/2012	Millington et al.
2012/0222245	A1	9/2012	Conrad
2012/0222260	A1	9/2012	Conrad
2012/0222262	A1	9/2012	Conrad
2014/0137362	A1	5/2014	Smith
2014/0137363	A1	5/2014	Wilson
2014/0137364	A1	5/2014	Stickney et al.
2014/0182080	A1	7/2014	Lee et al.
2014/0208538	A1	7/2014	Visel et al.

FOREIGN PATENT DOCUMENTS

CA	1218962	A	3/1987
CA	2450450	A1	12/2004
CA	2484587	A1	4/2005
CA	2438079	C	8/2009
CA	2659212	A1	9/2010
CN	1493244	A	5/2004
CN	1887437	A	1/2007
CN	202932850	U	5/2013

(56) **References Cited**

FOREIGN PATENT DOCUMENTS

DE	875134	C	4/1953
DE	9216071.9	U1	2/1993
DE	4232382	C1	3/1994
EP	493950	B1	7/1992
EP	1200196	B1	6/2005
EP	1779761	A2	5/2007
EP	1594386	B1	4/2009
EP	1676516	B1	1/2010
EP	2308360	A2	4/2011
EP	1629758	A3	10/2013
FR	2812531	B1	11/2004
GB	700791	A	12/1953
GB	1111074	A	4/1968
GB	2035787	B	10/1982
GB	2163703	B	1/1988
GB	2268875	A	1/1994
GB	2282979	B	10/1997
GB	2365324	B	7/2002
GB	2441962	B	3/2011
GB	2466290	B	10/2012
GB	2508035		5/2014
JP	61131720	A	6/1986
JP	00140533	A	5/2000
JP	2010178773	A	8/2010
JP	2010220632	A	10/2010
JP	2011189132	A	9/2011
JP	2011189133	A	9/2011
WO	8002561	A1	11/1980
WO	9627446	A1	9/1996
WO	9809121	A1	3/1998
WO	9843721	A1	10/1998
WO	01/07168	A1	2/2001
WO	02/17766	A3	3/2002
WO	2004069021	A1	8/2004
WO	2006026414	A3	8/2007
WO	2008009883	A1	1/2008
WO	2008009888	A1	1/2008
WO	2008009890	A1	1/2008
WO	2008009891	A1	1/2008
WO	2008088278	A2	7/2008
WO	2009026709	A1	3/2009
WO	2010102396	A1	9/2010
WO	2010142968	A1	12/2010
WO	2010142969	A1	12/2010
WO	2010142970	A1	12/2010
WO	2010142971	A1	12/2010
WO	2011054106	A1	5/2011
WO	2012042240	A1	4/2012
WO	2012117231	A1	9/2012

OTHER PUBLICATIONS

Supplementary European Search Report, dated Jun. 16, 2009, as received on the corresponding EP application No. 07719394.4.
Office Action received in connection to the corresponding Chinese Patent Application No. 200880126486.6 dated Mar. 23, 2012.
Office Action received in connection to the corresponding U.S. Appl. No. 12/720,901 dated Jun. 10, 2011.
Office Action received in connection to the related Chinese Patent Application No. 00813438.3 issued Jul. 11, 2003.
Handbook of Air Pollution Prevention and Contriol, PP397-404, 2002.
Makita 4071 Handy Vac.
Makita BCL180 User Manual.
European Communication pursuant to Article 94(3) on European Patent Application No. 04078261.7, dated Apr. 24, 2012.
European Communication pursuant to Article 94(3) on European Patent Application No. 04078261.7, dated Feb. 26, 2010.
International Preliminary Examination Report on International application No. PCT/CA00/00873, dated Oct. 26, 2001.
Office Action dated Jul. 7, 2010, for Canadian Patent Application No. 2,675,714.
International Search Report and Written Opinion received in connection to International patent application No. PCT/CA2007/002211, mailed on Apr. 21, 2008.
International Search Report and Written Opinion received in connection to international patent application No. PCT/CA2015/050661, mailed on Oct. 19, 2015.
United States Office Action, dated Feb. 16, 2011, for U.S. Appl. No. 11/953,292.
United States Office Action, dated Jul. 22, 2010, for U.S. Appl. No. 11/953,292.
Euro-Pro Shark Cordless Hand Vac Owner's Manual, published in 2002.
International Search Report and Written Opinion received in connection to international patent application No. PCT/CA2014/000133, mailed on May 26, 2014.
Office Action, issued in U.S. Appl. No. 12/720,901, dated Jun. 10, 2011.
Office Action, issued in U.S. Appl. No. 12/720,901, dated Nov. 26, 2010.

* cited by examiner

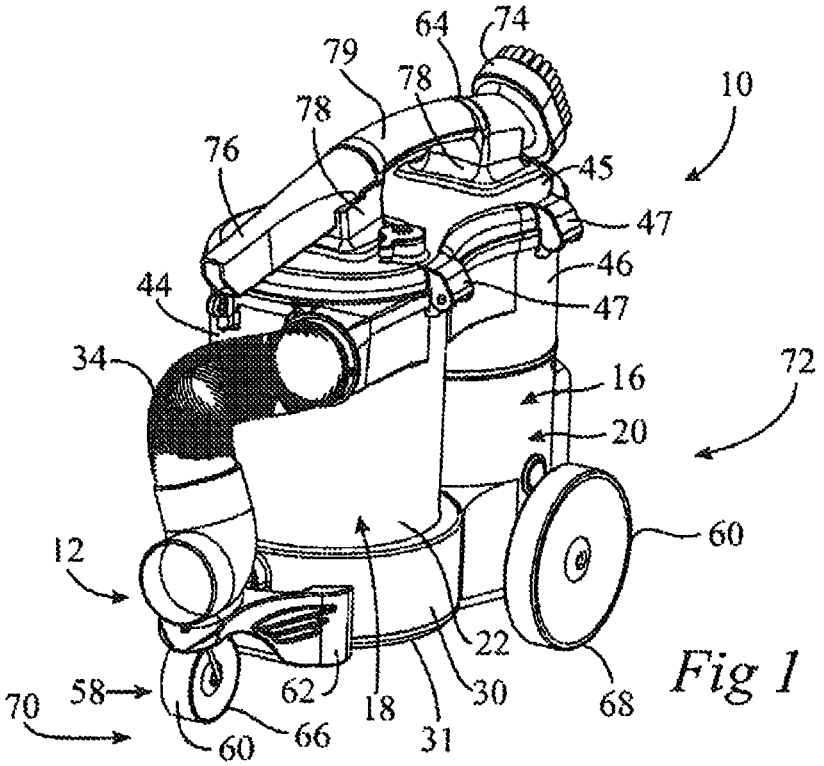
64
74
79
78
78
10
76
45
47
46
44
47
34
16
72
20
60
12
22
62
18
30
68
58
70
60
66
31

Fig 1

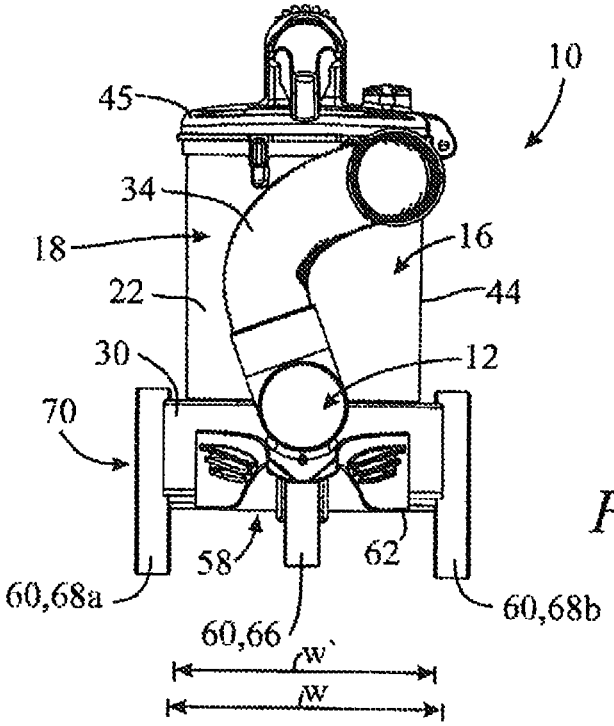
10
45
34
18
16
22
44
30
12
70
58
62
60,68a
60,68b
60,66
w'
w

Fig 2

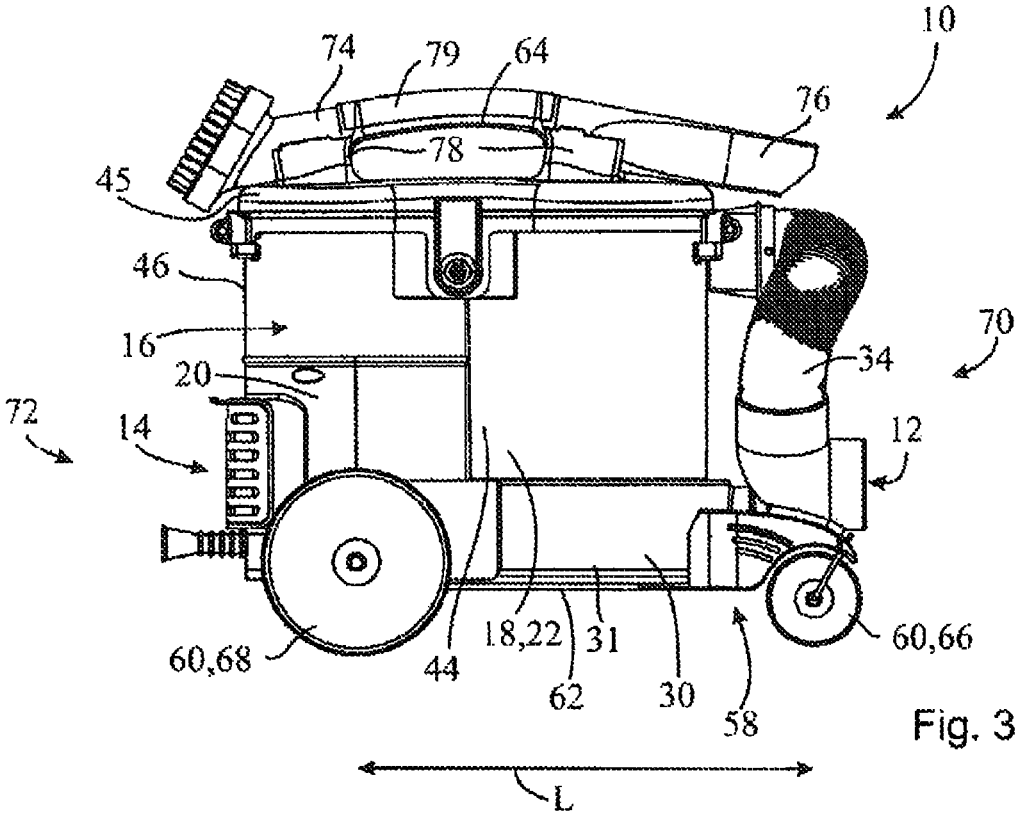
10
74
79
64
76
78
45
46
16
20
70
34
72
14
12
60,68
44
18,22
31
62
30
58
60,66
L

Fig. 3

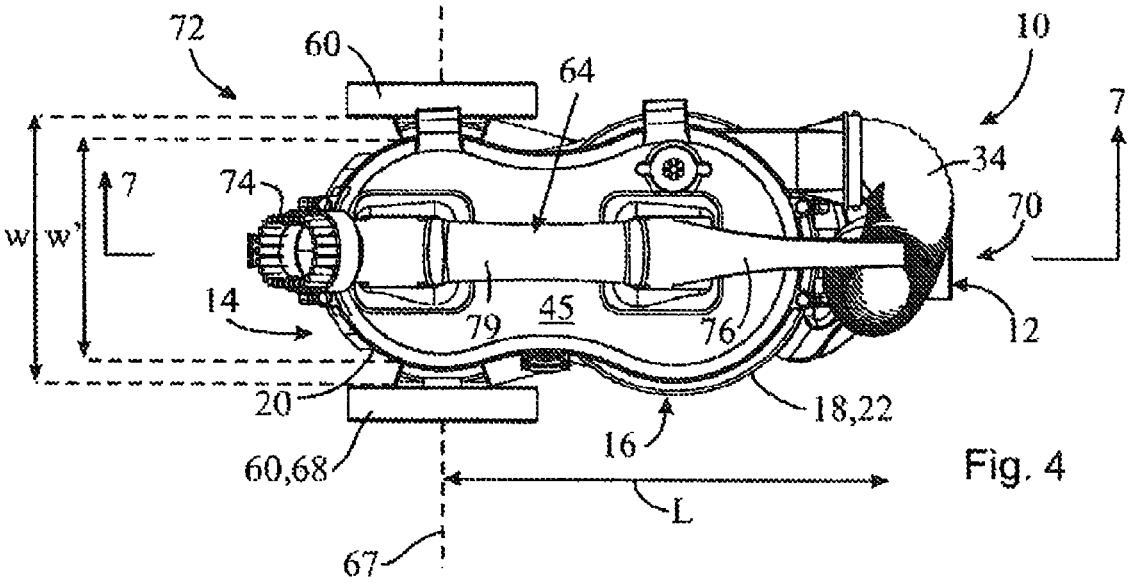
72
60
64
10
7
34
74
70
w
w'
14
79
45
76
12
20
18,22
16
60,68
L
67

Fig. 4

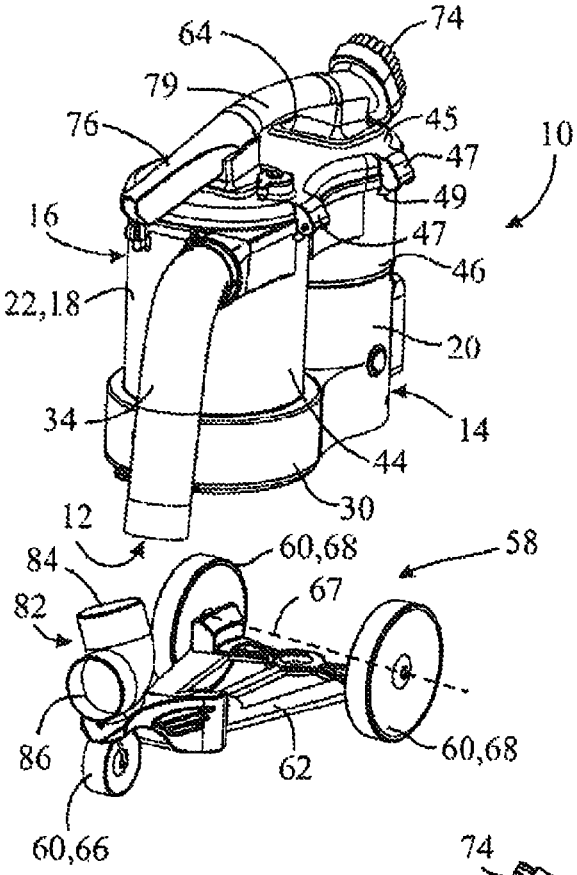
74
64
79
76
45
10
47
49
16
47
46
22,18
20
34
14
44
30
12
60,68
58
84
67
82
86
62
60,68
60,66

Fig. 5

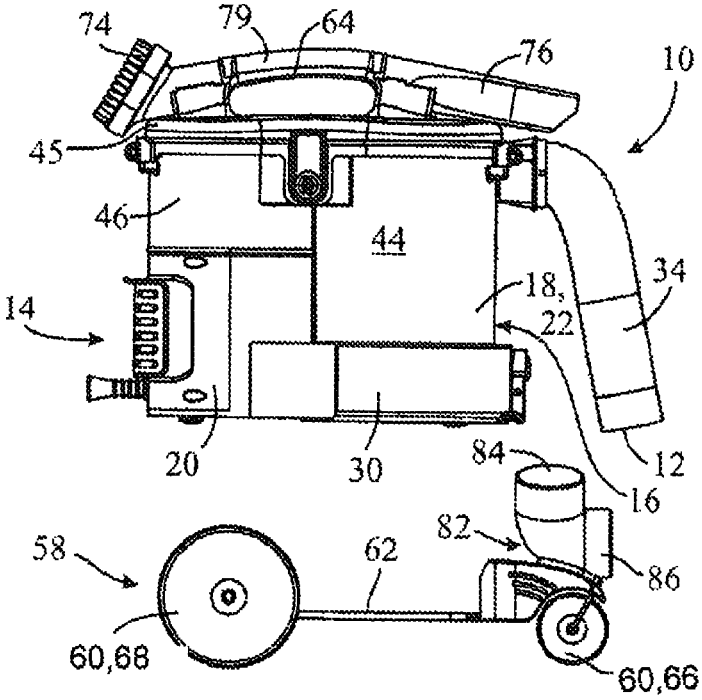
74
79
64
76
10
45
46
44
34
18,
22
14
20
30
84
12
16
82
58
62
86
60,68
60,66

Fig. 6

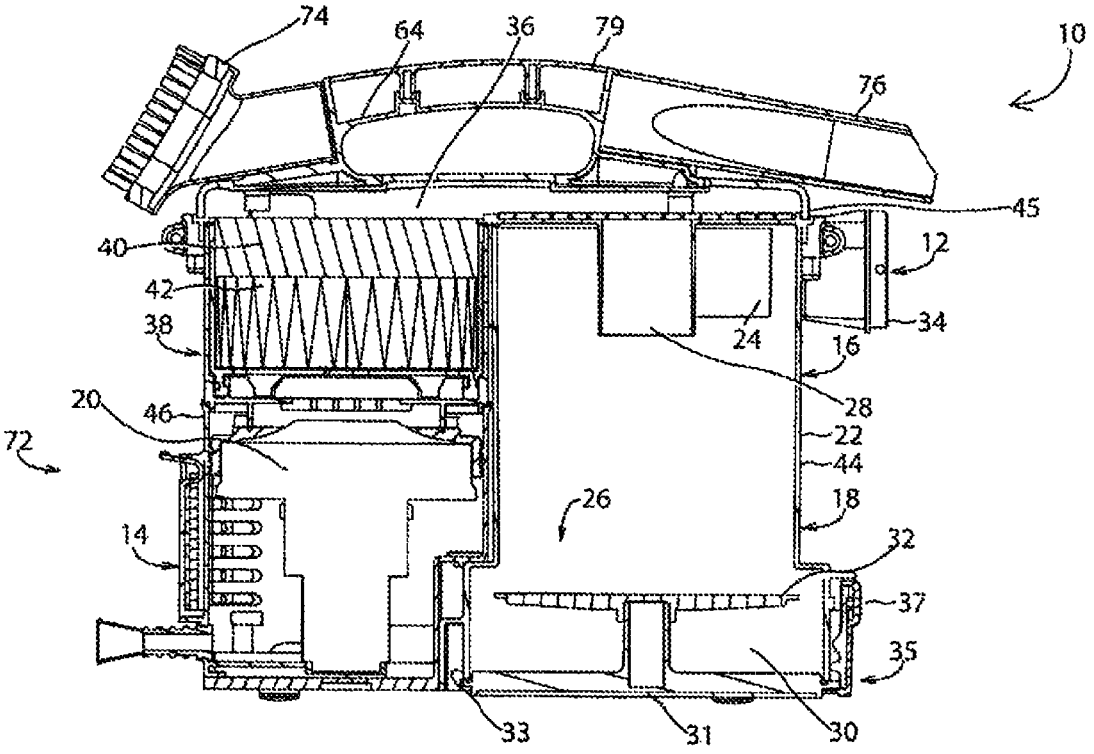
74
64
36
79
10
76
45
40
12
42
38
24
34
16
28
20
46
22
72
44
26
18
14
32
37
35
33
31
30

Fig. 7

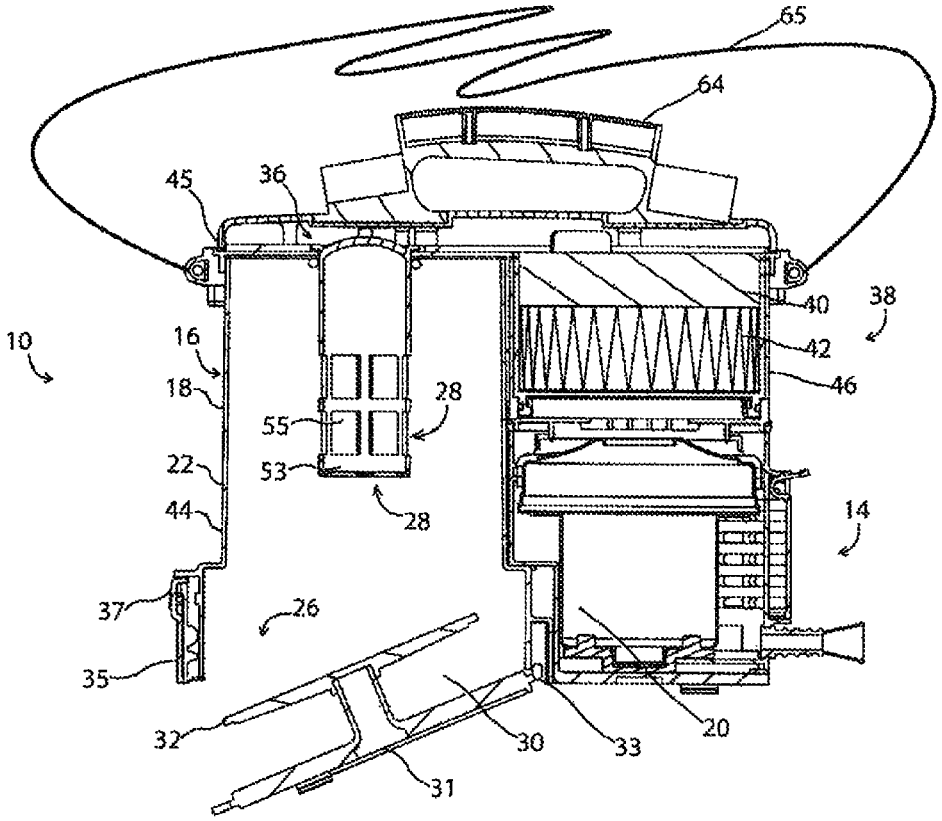
65
64
45
36
40
38
10
16
42
18
46
28
55
22
53
28
44
14
37
26
35
32
30
33
20
31

Fig. 8

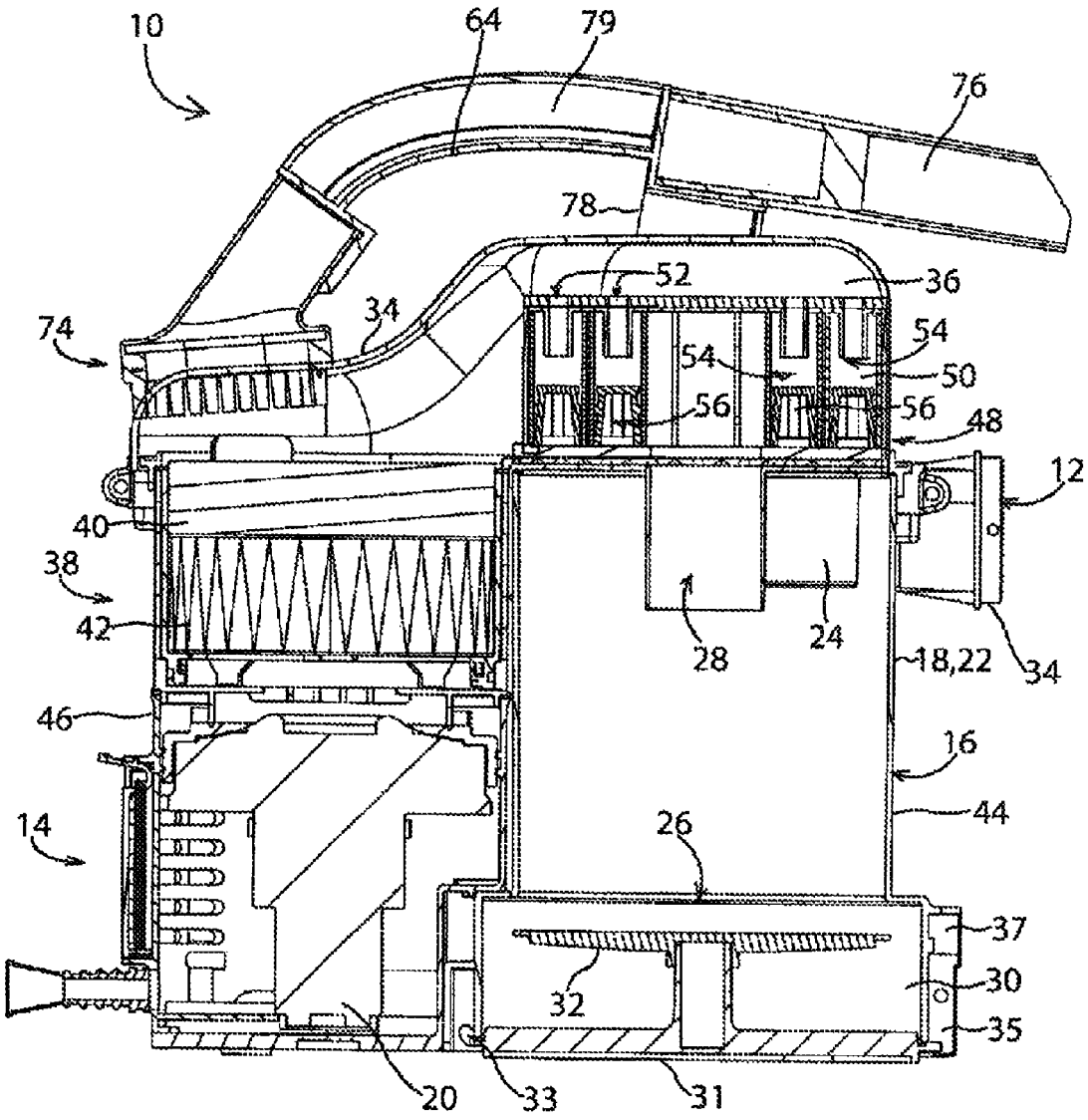
10
64
79
76
78
52
36
74
34
54
54
50
56
56
48
12
40
38
42
28
24
18,22
34
46
16
14
26
44
37
32
30
35
20
33
31

Fig. 9

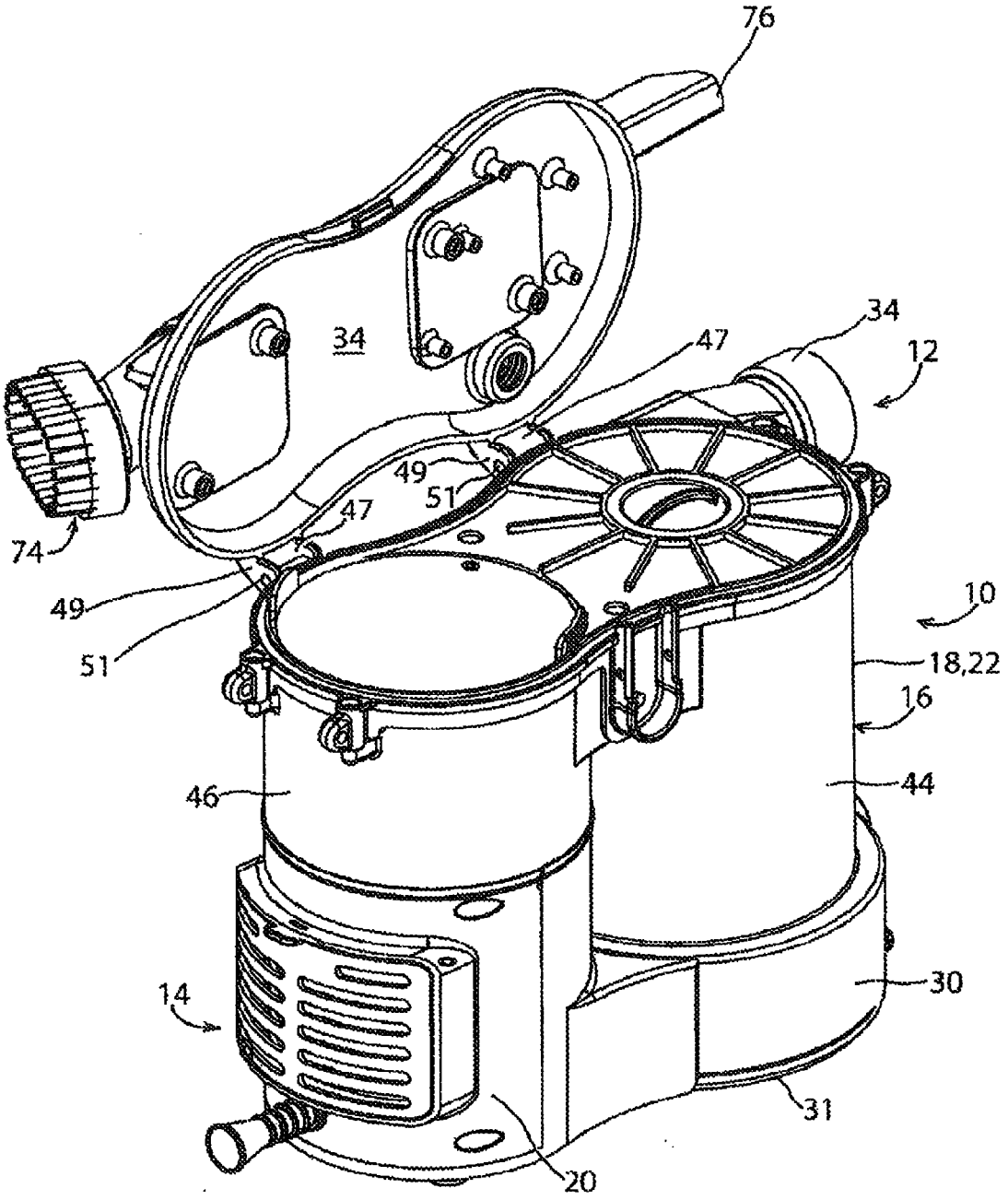

Fig. 10

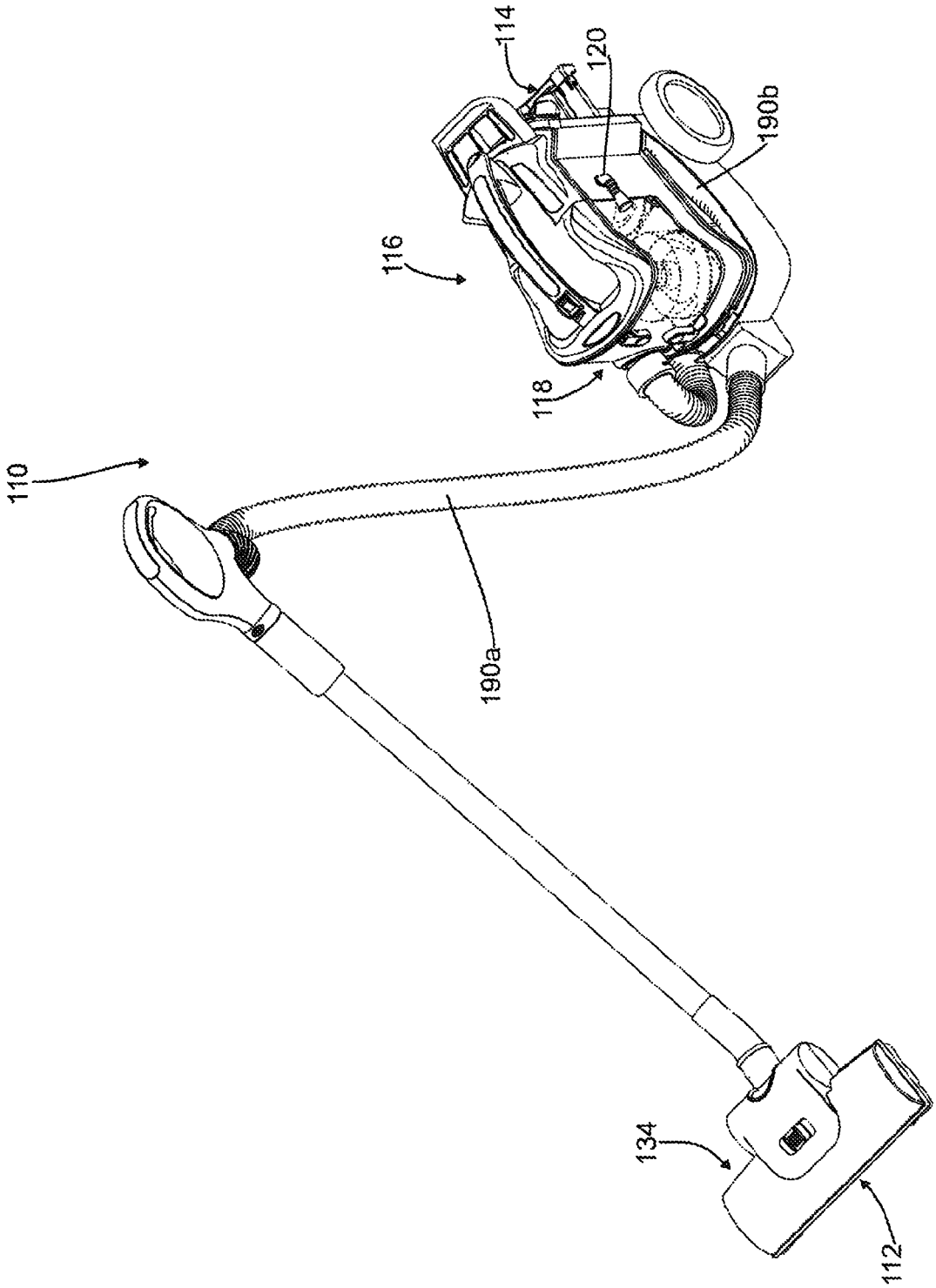

Fig. 11

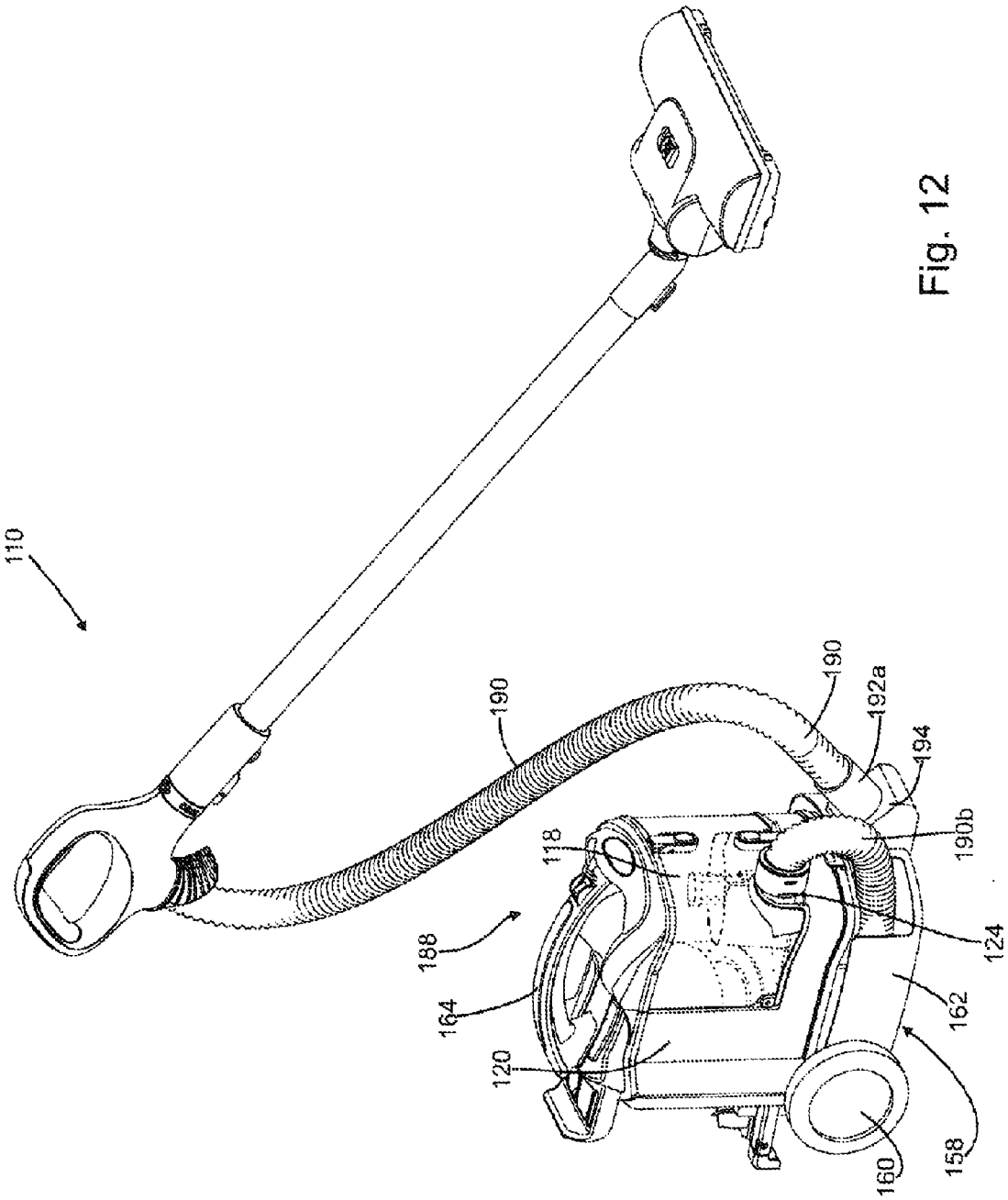

Fig. 12

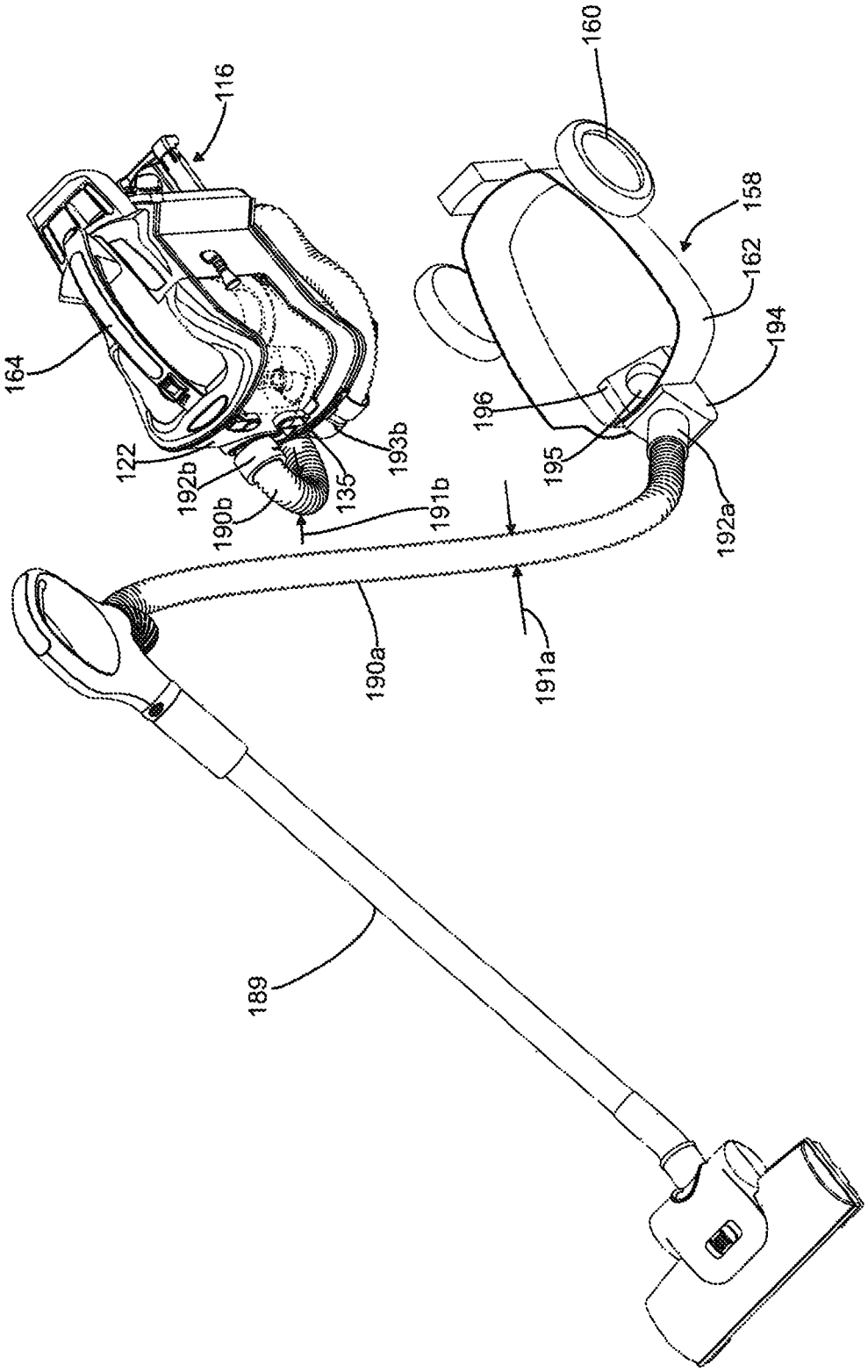
116
164
122
192b
190b
135
193b
191b
160
158
162
194
196
195
192a
190a
191a
189

Fig. 13

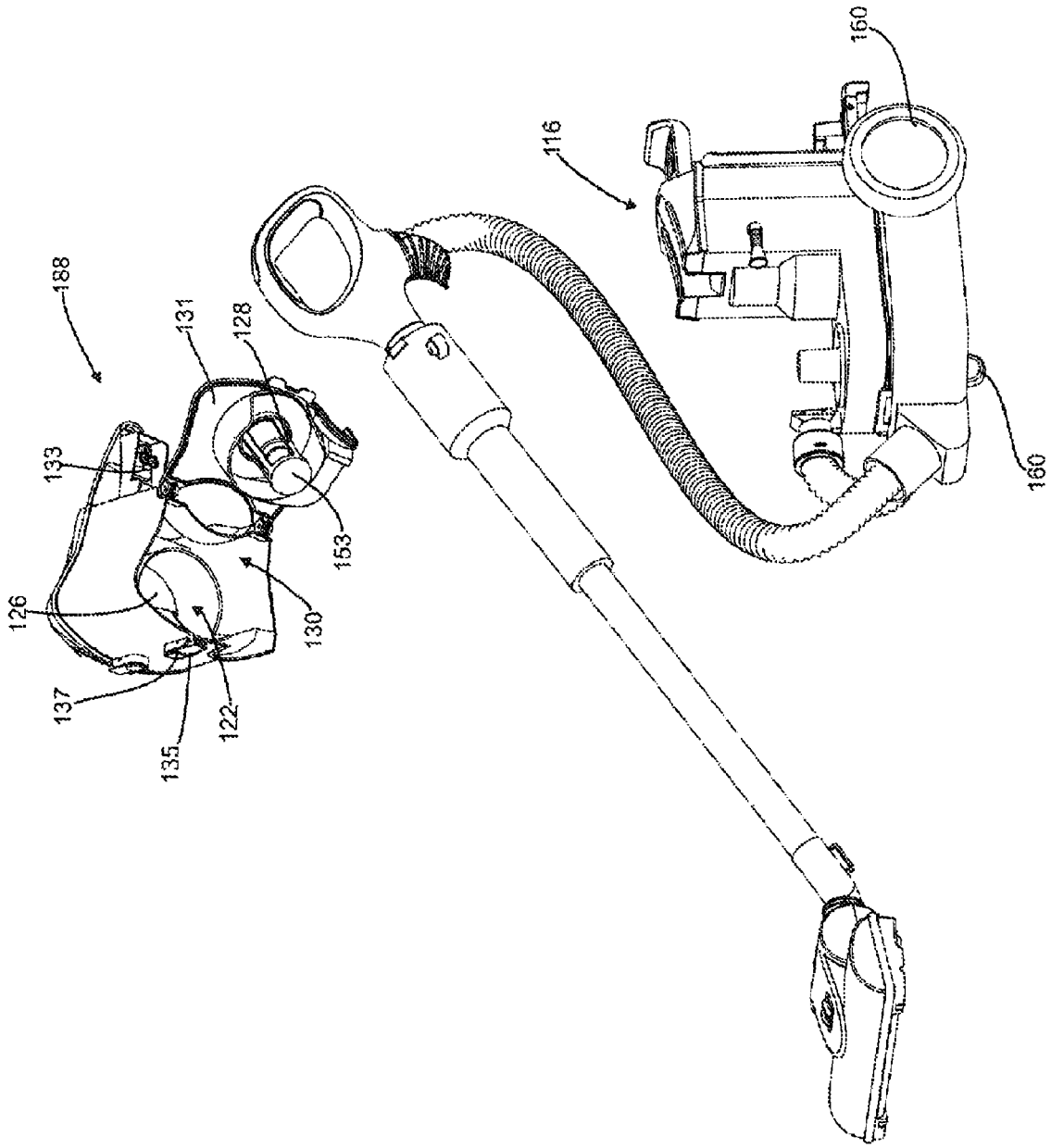

Fig. 14

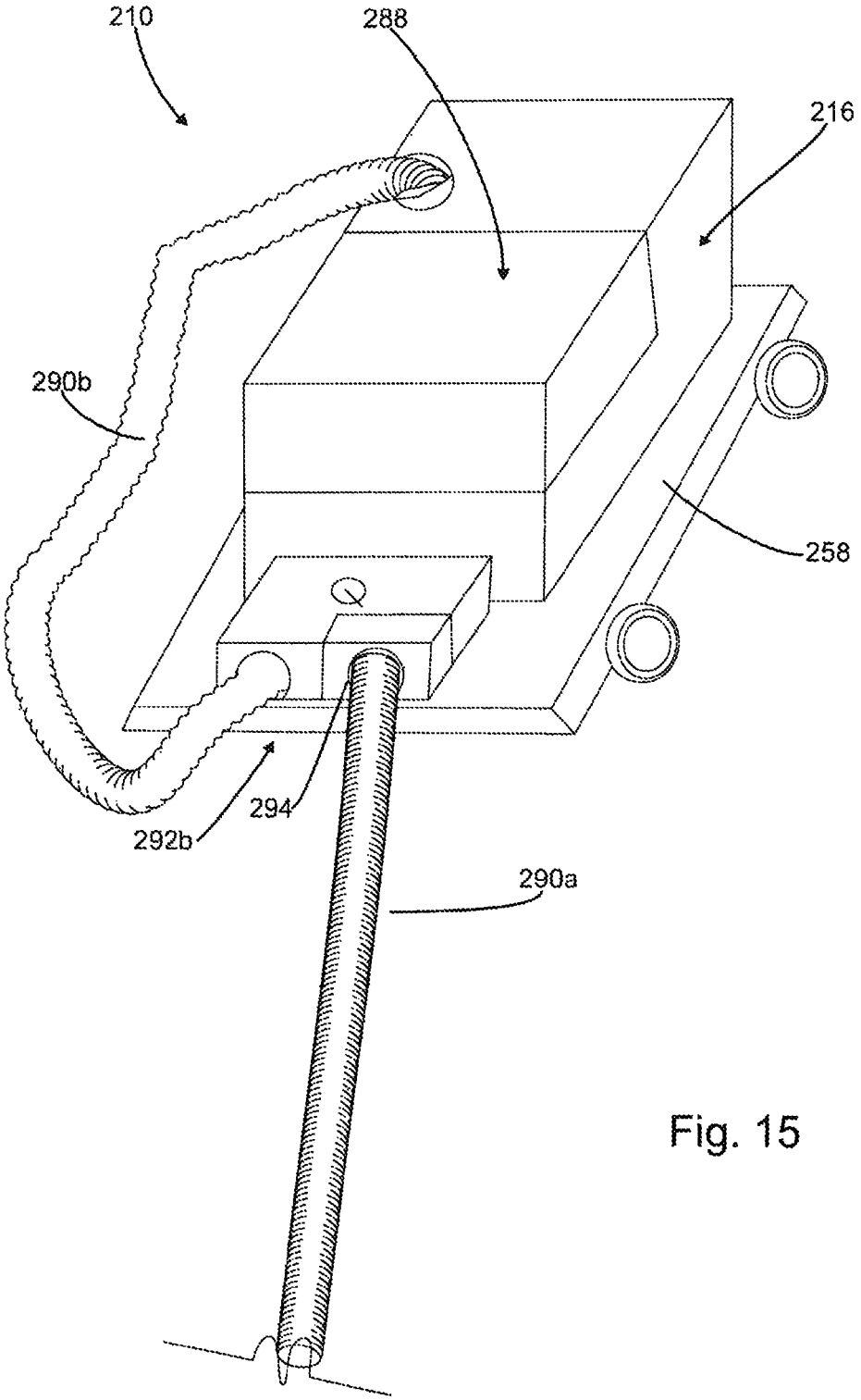

Fig. 15

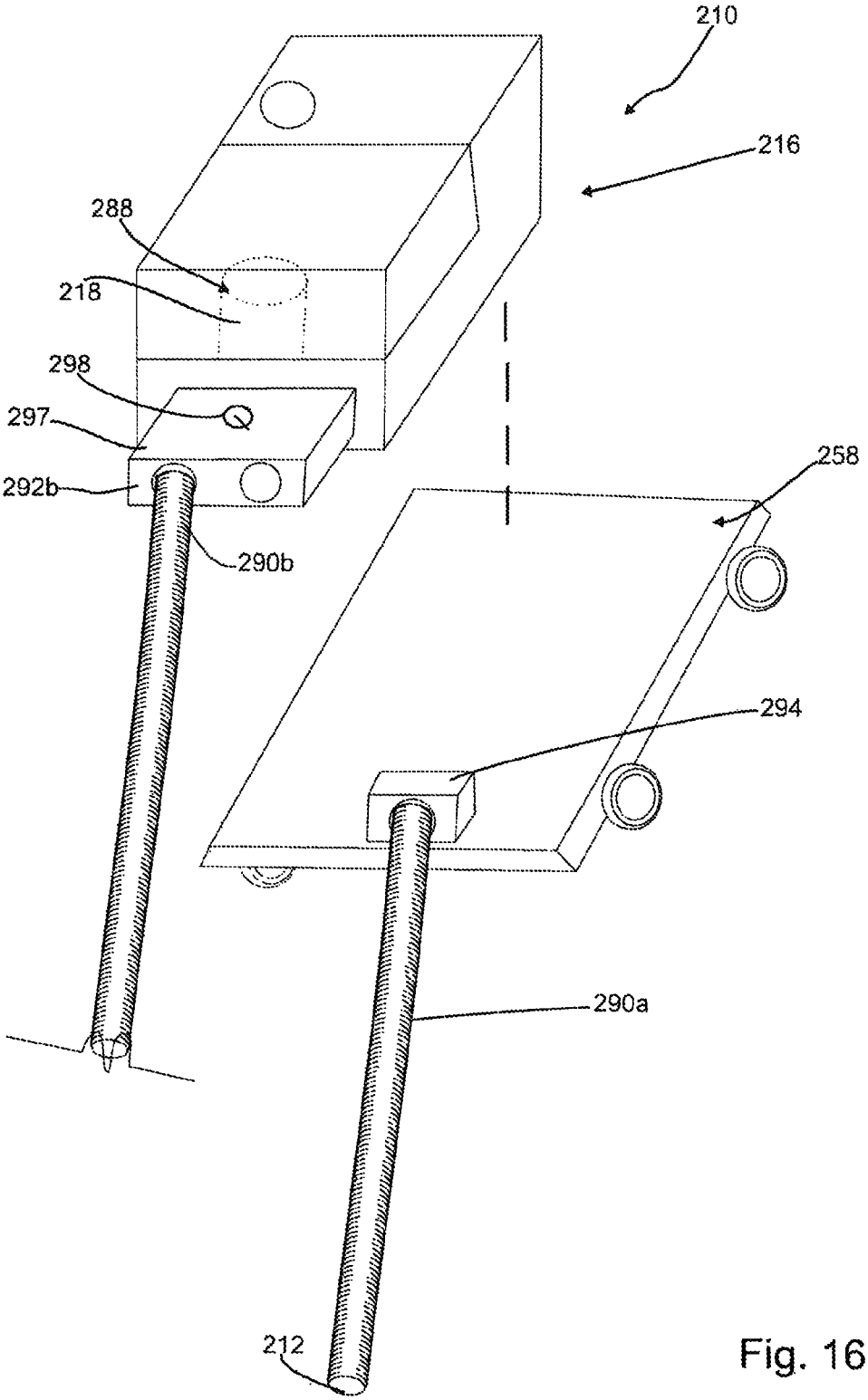

Fig. 16

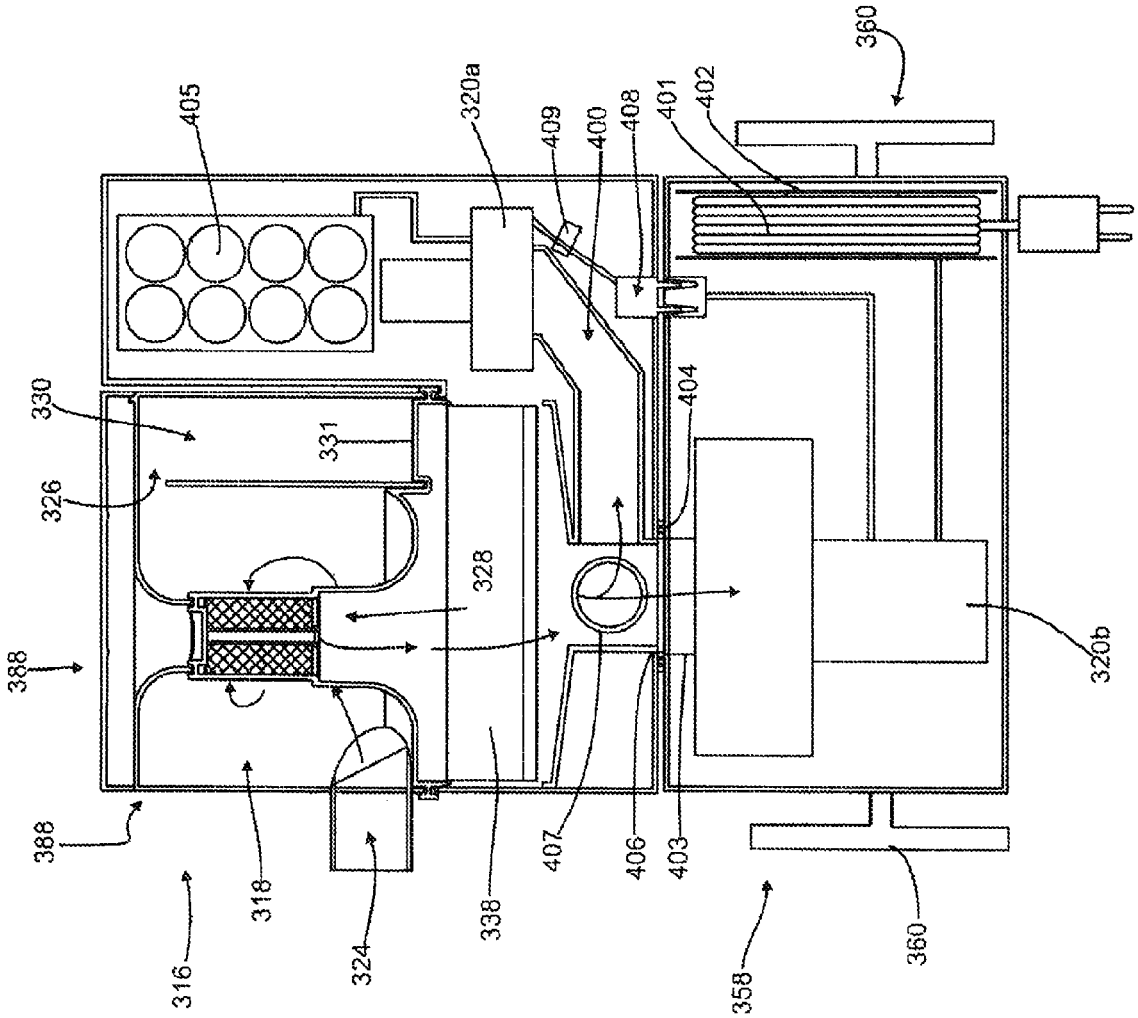
405
330
326
388
388
316
318
324
331
328
338
320a
409
400
408
401
402
360
404
407
406
403
358
360
320b

Fig. 17

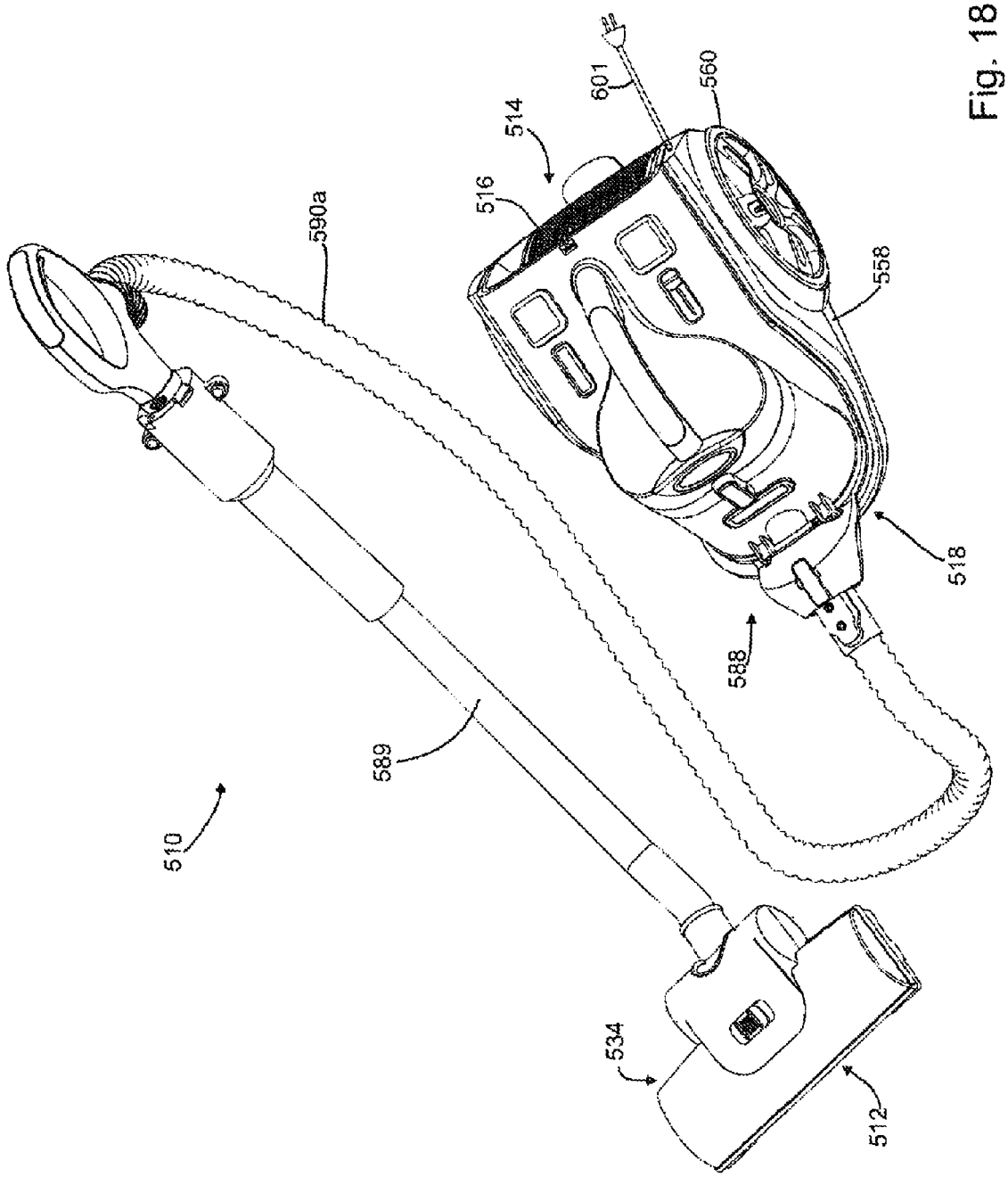

Fig. 18

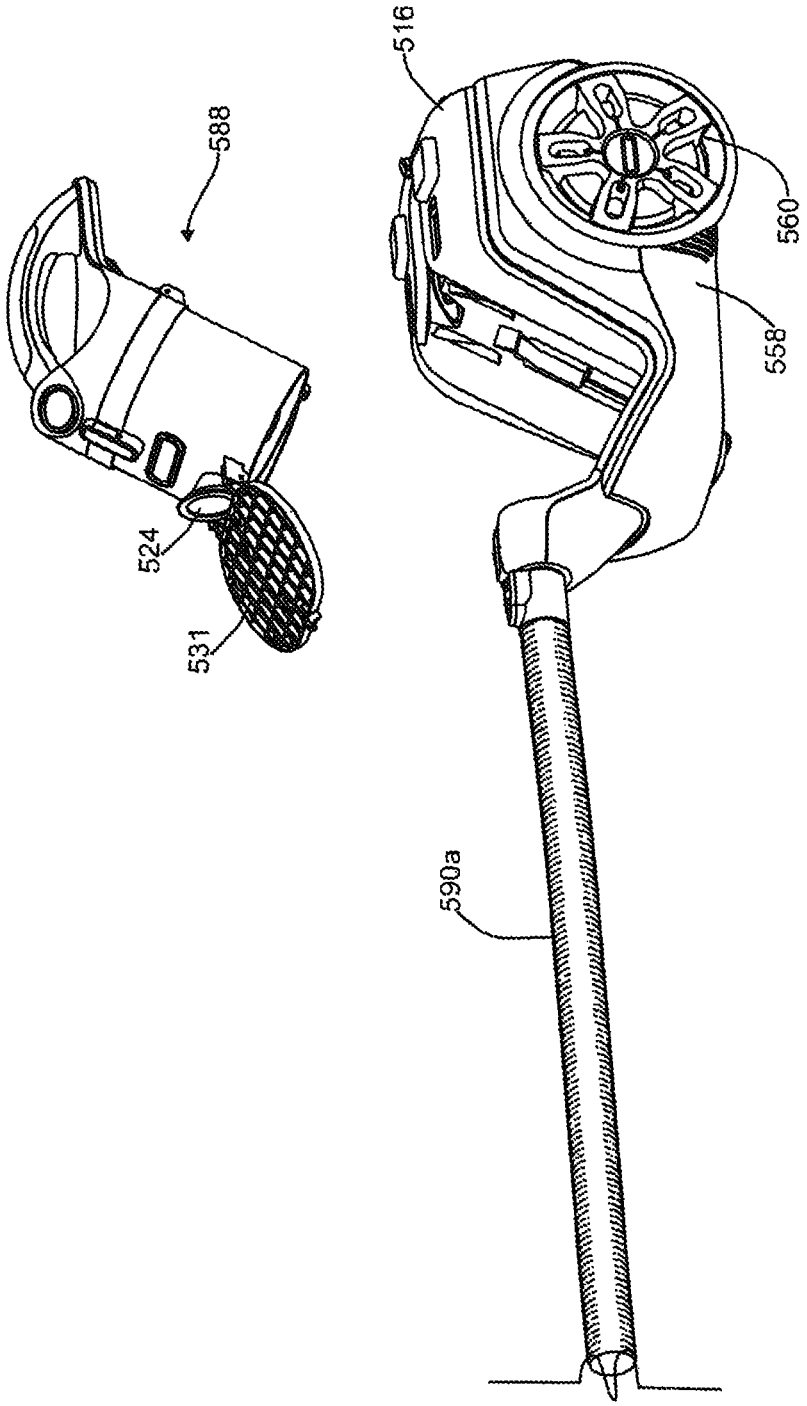

Fig. 19

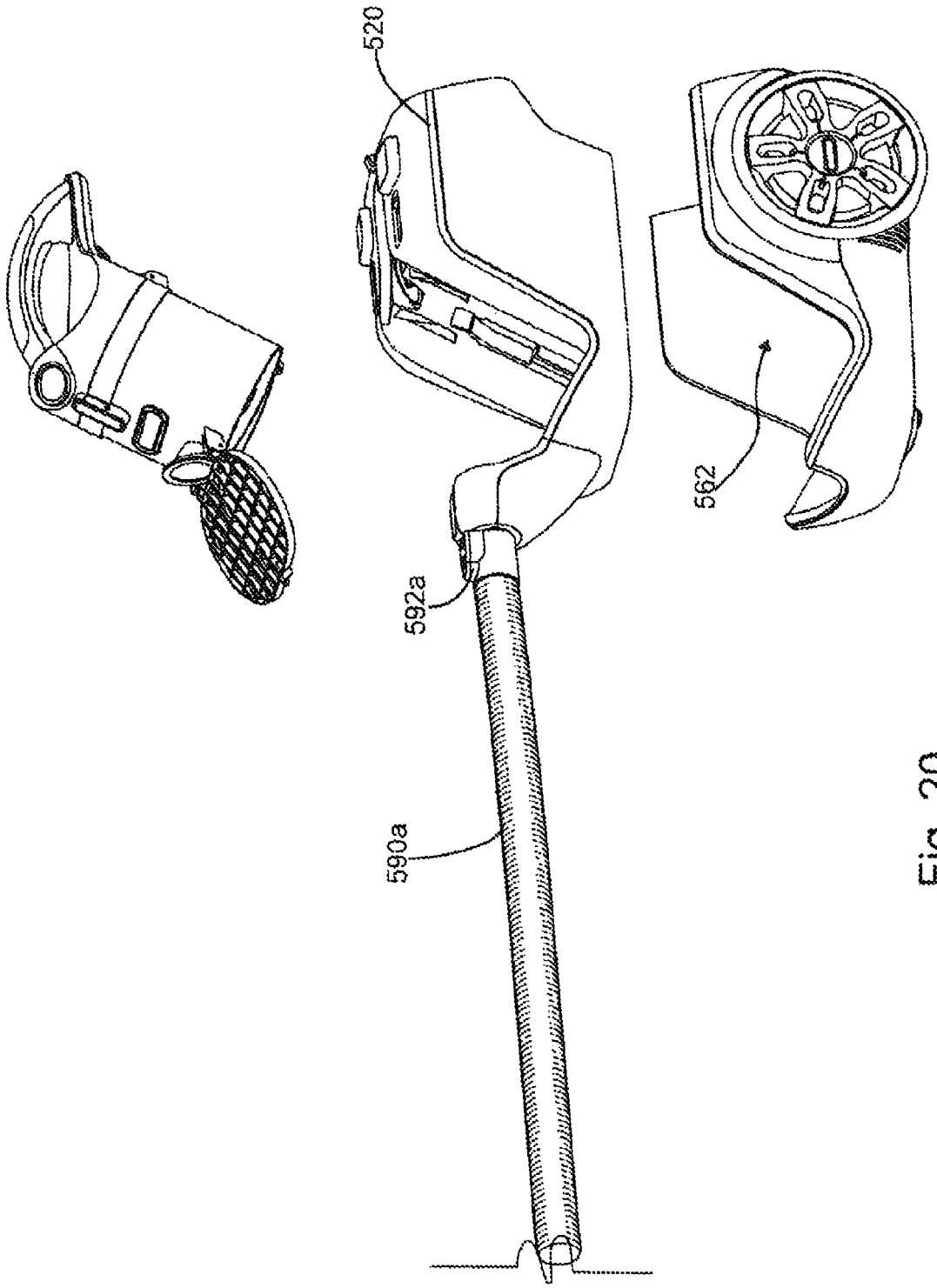

Fig. 20

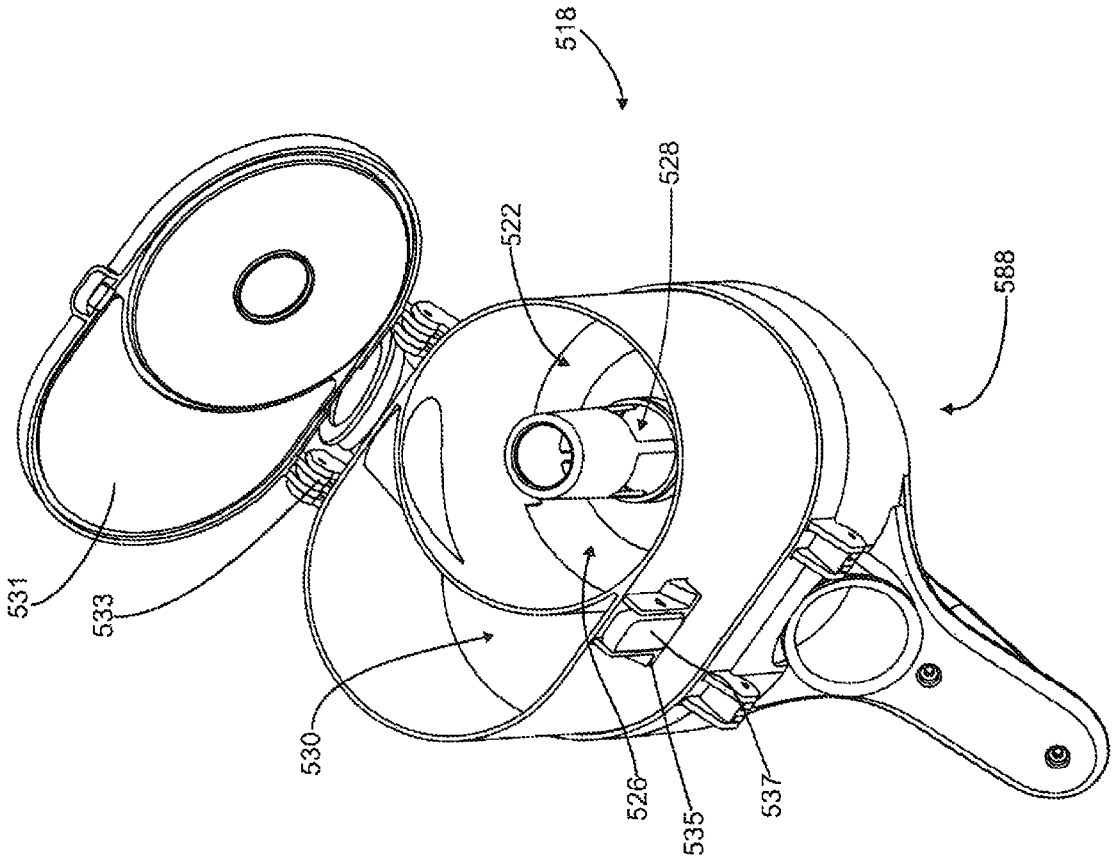

Fig. 21

SURFACE CLEANING APPARATUS

CROSS-REFERENCE TO RELATED APPLICATIONS

This application is a continuation of co-pending U.S. patent application Ser. No. 13/782,217, filed on Mar. 1, 2013, which itself is a continuation in part of co-pending U.S. patent application Ser. No. 13/720,754, filed on Dec. 19, 2012, which itself is a divisional application of U.S. Pat. No. 8,359,705, which issued on Jan. 29, 2013, which itself claims priority from U.S. Provisional Patent application 60/870,175 (filed on Dec. 15, 2006), and 60/884,767 (filed on Jan. 12, 2007), each of which are incorporated herein by reference in their entirety.

FIELD

This specification relates to a surface cleaning apparatus comprising a base with a removable portable surface cleaning unit such as a pod or other hand carriable surface cleaning apparatus wherein the portable surface cleaning apparatus is usable when mounted on the base or when removed therefrom.

INTRODUCTION

The following is not an admission that anything discussed below is part of the prior art or part of the common general knowledge of a person skilled in the art.

Various types of surface cleaning apparatuses are known in the art. Such surface cleaning apparatuses include vacuum cleaners, including upright vacuum cleaners, hand carriable vacuum cleaners, canister type vacuum cleaners, and Shop-Vac™ type vacuum cleaners. Some such vacuum cleaners are provided with wheels. For example, typical upright vacuum cleaners are provided with a surface cleaning head that includes wheels mounted to a bottom surface thereof. Upright vacuum cleaners are easy for a consumer to use since the consumer does not have to carry the vacuum cleaner but merely push it over a surface. However, depending on the size of the surface cleaning head, an upright vacuum cleaner may not be usable in smaller or crowded areas. Canister vacuum cleaners have a flexibly hose extending between a surface cleaning head and the canister body, thereby improving mobility of the cleaning head. However, consumers must separately move a canister body, which can add an extra step during the cleaning process.

SUMMARY

This summary is intended to introduce the reader to the more detailed description that follows and not to limit or define any claimed or as yet unclaimed invention. One or more inventions may reside in any combination or sub-combination of the elements or process steps disclosed in any part of this document including its claims and figures.

According to one broad aspect of this invention, a surface cleaning apparatus comprises a portable cleaning unit, which may be carried by hand or a shoulder strap such as a pod, which is removably mounted on a wheeled base. The portable cleaning unit may be provided with a suction motor and an energy storage member (such as batteries). Accordingly, the suction motor of the portable cleaning unit may be operable on DC current. However, in accordance with this embodiment, the wheeled base may include a second suction motor (e.g. an AC powered suction motor). Accordingly,

when the portable cleaning unit is provided on the wheeled base and the wheeled base is connected to a source of current, the suction motor in the wheeled base may be operated, e.g. on AC current, and used to draw air through an airflow path to the air treatment member in the portable cleaning unit. An advantage of this design is that the suction motor provided in the wheeled base may produce a higher airflow and therefore increase cleanability when the portable cleaning unit is provided on the wheeled base. However, when the portable cleaning unit is removed from the wheeled base, a smaller and lighter suction motor is utilized. While the velocity of the airflow through the portable cleaning unit when removed from the base may be decreased, the reduced weight of the suction motor may be beneficial. In addition, a smaller airflow path may be provided when the portable cleaning unit is removed from the base, and, accordingly, a smaller DC power suction motor may provide substantially similar airflow in the hand carriable mode.

The portable cleaning unit may comprise at least one cyclonic separation stage and a suction motor. Accordingly, the portable cleaning unit is usable, e.g., as a vacuum cleaner or the like, when removed from the wheeled base. The cyclonic separation stage comprises a cyclone chamber and a material collection chamber. The portable cleaning unit is configured such that the material collection chamber is removable for emptying when the portable cleaning unit is mounted on the wheeled base. For example, the material collection chamber may be removed by itself when the portable cleaning unit is mounted on the wheel base. Alternately, the material collection chamber and the cyclone chamber may be removable as a unit (e.g. a cyclone bin assembly). It will be appreciated that the material collection chamber, either by itself or in conjunction with the cyclone chamber and possibly other elements, may be removable from the portable cleaning unit when the portable cleaning unit has been removed from the wheeled base. An advantage of this design is that the usability of the surface cleaning apparatus is increased. In particular, when it is needed to empty the dirt collection chamber, all that is needed is to remove the dirt collection chamber either by itself, or, for example, together with the cyclone chamber for emptying. Accordingly, a user did not carry the weight of the motor when the user is emptying the dirt collection chamber.

Preferably, in accordance with this embodiment, the dirt collection chamber and, optionally, the cyclone chamber may be provided on an upper portion of the portable cleaning unit so as to be removable upwardly therefrom.

It will be appreciated by a skilled person in the art that any of the features of the configuration of a portable cleaning unit to permit a dirt collection chamber to be removed from the portable cleaning unit when the portable cleaning unit is mounted on the wheeled base as discussed herein may not be utilized with dual motor design disclosed herein, but may be used by itself or in combination with any other feature disclosed herein.

In accordance with another embodiment, the portable cleaning unit may be provided with a pod hose which is removable with the portable cleaning unit from the wheeled base. The pod hose may have a smaller diameter and, accordingly, may be used only when the portable cleaning unit has been removed from the wheeled base. Accordingly, when the portable cleaning unit is on a wheeled base, the pod hose does not form part of the fluid flow path. Accordingly, the smaller diameter of the pod hose does not restrict the airflow path when the portable cleaning unit is placed on a wheeled base. An advantage of this design is that the

portable cleaning unit may carry a longer hose without increasing the volume taken by the pod hose. In addition, the pod hose, being a smaller diameter, may be more flexible and enhance the usability of the portable cleaning unit in a hand carriable mode. For example, the pod hose may have a greater stretch ratio, for example, of 4:1 to 7:1 or more.

In accordance with this embodiment, a valve may be provided on the portable cleaning unit whereby the pod hose is not in airflow communication with the suction motor when the portable cleaning unit is mounted on the wheeled base. However, when the portable cleaning unit is removed from the wheeled base, the valve may be actuated (e.g. automatically upon removal of the portable cleaning unit from the wheeled base, manually by the user or automatically when the hose is deployed for use) such that pod hose form part of the air flow path.

It will be appreciated by a person skilled in the art that any of the features of the pod hose which are discussed herein may not be utilized with the dual motor design disclosed herein, but may be used by itself or in combination with any other feature disclosed herein.

In accordance with another embodiment, the portable cleaning unit may be operable by AC power supplied to the base when the portable cleaning unit is mounted on the base and may be operable on DC power when the portable cleaning unit is removed from the base. Accordingly, the portable cleaning unit may include an energy storage member (e.g. one or more batteries) which may power the suction motor when the portable cleaning unit is removed from the base. Accordingly, the suction motor may be operable on DC current. When the pod is mounted on the wheeled base, and the wheeled base is connected to a source of current by an electrical cord, then the suction motor may be in electrical communication with the base so as to be powered by AC current supplied through the electrical cord. For example, the suction motor could have dual winding so as to be operable on both AC and DC current. Alternately, the base may include a power supply to convert the AC current to DC current which is then supplied to the suction motor when the portable cleaning unit is placed on the base. For example, the power supply may comprise an inverter.

In this particular embodiment, it will be appreciated that the batteries in the portable cleaning unit may be charged while the portable cleaning unit is mounted on the wheeled base and the wheeled base is plugged into an electrical outlet.

In a further alternate embodiment, instead of utilizing electricity from an electrical outlet, the wheeled base may include a fuel cell or an alcohol powered internal or external combustion engine. In such an embodiment, the wheeled base may produce AC current or DC current, which is then supplied to the suction motor when the portable cleaning unit is mounted on the wheeled base and actuated.

It will be appreciated by a person skilled in the art that any of the features of a portable cleaning unit which is operable on AC and DC current as disclosed herein may not be utilized with the dual motor design disclosed herein, but may be used by itself or in combination with any other feature disclosed herein.

In accordance with the further embodiment, the portable cleaning unit may comprise both an energy storage member and a power supply. Accordingly, when the portable cleaning unit is connected to a power source (e.g. a cord extends from the portable cleaning unit to an electrical outlet), AC power may be supplied to the power supply (e.g. an inverter) to convert the AC current to DC which is then utilized to power the suction motor. When a user is unable to or does not want to plug the portable cleaning unit into a wall outlet, the portable cleaning unit may be powered by the energy storage member (e.g. batteries), which provide DC current to a suction motor. Accordingly, the portable cleaning unit may be powered by both AC current from a wall outlet and DC current supplied by batteries as may be desired. In a further alternate embodiment, the suction motor may be provided with two windings. In such a case, the power supply is not required and the suction motor may be powered by both DC current from the batteries and AC current from a wall outlet.

It will be appreciated by a person skilled in the art that any of the features of a pod operable with both AC and DC current as discussed herein may not be utilized with dual motor design disclosed herein, but may be used by itself or in combination with any other feature disclosed herein.

In one embodiment, there is provided a surface cleaning apparatus comprising

(a) a wheeled base comprising an AC suction motor;

(b) a portable cleaning unit removably mounted on the wheeled base and comprising at least one cyclonic separation stage, a first energy storage member and a portable cleaning unit suction motor that is operable on DC power; and,

(c) a fluid flow path extending from a first dirty fluid inlet to a clean air outlet of the surface cleaning apparatus,

wherein the AC suction motor provides motive power to move fluid through the fluid flow path when the surface cleaning unit is switched on and when the portable cleaning unit is mounted on the wheeled base, and

wherein the portable cleaning unit suction motor provides motive power to move fluid through the fluid flow path when the portable cleaning unit is switched on and when the portable cleaning unit is removed from the wheeled base

In some embodiments, the wheeled base may further comprise or is connectable to a power cord and the portable cleaning unit is powered solely by the first energy storage member when the portable cleaning unit is removed from the wheeled base.

In some embodiments, the wheeled base may further comprise or is connectable to a power cord, the first energy storage member comprises batteries and the batteries are charged when the portable cleaning unit is mounted on the wheeled base.

In some embodiments, the suction motor in the portable cleaning unit may not be used to provide motive power to move fluid through the fluid flow path when the surface cleaning unit is switched on and when the portable cleaning unit is mounted on the wheeled base.

In some embodiments, the fluid flow path may comprise an upstream portion that extends from the first dirty fluid inlet to the portable cleaning unit and the AC suction motor is in the fluid flow path.

In some embodiments, the fluid flow path may comprise a downstream fluid flow path extending through the portable cleaning unit to the clean air outlet and the portable cleaning unit suction motor is in the downstream fluid flow path.

In some embodiments, the portable cleaning unit may comprise a flexible hose having a second dirty fluid inlet arid the flexible hose is part of the downstream fluid flow path when the portable cleaning unit is removed from the wheeled base.

In some embodiments, the flexible hose may be an electrified flexible hose.

In some embodiments, the wheeled base may further comprise a second energy storage member.

In some embodiments, the second energy storage member may charge the first energy storage member when the portable cleaning unit is mounted on the wheeled base.

In some embodiments, the portable cleaning unit suction motor may be a DC motor.

In one embodiment, there is provided a surface cleaning apparatus comprising

(a) a wheeled based connectable to a source of current;

(b) a portable cleaning unit removably mounted on the wheeled base and comprising at least one cyclonic separation stage, a first energy storage member and a portable cleaning unit suction motor that is operable on DC power; and,

(c) a fluid flow path extending from a first dirty fluid inlet to a clean air outlet of the surface cleaning apparatus,

wherein the portable cleaning unit suction motor is operable on DC power when removed from the wheeled base and is operable on power provided by the wheeled base when mounted on the wheeled base.

In some embodiments, the portable cleaning unit suction motor may be a DC motor.

In some embodiments, the wheeled base may further comprise or is connectable to a power cord and the portable cleaning unit is powered solely by the first energy storage member when the portable cleaning unit is removed from the wheeled base.

In some embodiments, the wheeled base may further comprise or is connectable to a power cord, the first energy storage member comprises batteries and the batteries are charged when the portable cleaning unit is mounted on the wheeled base.

In some embodiments, the wheeled base may further comprise or is connectable to a power cord, the wheeled base further comprises a circuit that receives AC current and outputs DC current and the portable cleaning unit is powered the DC current when the portable cleaning unit is mounted on the wheeled base.

In some embodiments the portable cleaning unit suction motor may operate at a first power level when removed from the wheeled base and at a second power level when is mounted on the wheeled base.

In some embodiments the first power level may be less than the second power.

In accordance with another aspect, a surface cleaning apparatus, preferably a canister or Shop-Vac™ style vacuum cleaner is provided which comprises a portable cleaning unit and a wheeled base. Preferably, the cleaning unit is removably mounted to the wheeled base. Alternately, or in addition, the wheeled base has wheels mounted outward of the wheeled base, and which are preferably of a larger diameter (e.g., 1-3 inches in diameter, preferably 1.5-2.5 inches in diameter).

According to this aspect, the surface cleaning apparatus may comprise a member having a dirty fluid inlet. A fluid flow path extends from the dirty fluid inlet to a clean air outlet of the surface cleaning apparatus. The surface cleaning apparatus further comprises a wheeled based. A portable cleaning unit is removably mounted on the wheeled base and comprising at least one cyclonic separation stage and a suction motor positioned in the fluid flow path.

Embodiments in accordance with this broad aspect may be advantageous because the surface cleaning apparatus may have increased maneuverability. That is, the surface cleaning apparatus may be used as a wheel mounted surface cleaning apparatus when convenient for a user since the user need not carry the surface cleaning apparatus, or as a hand or strap carriable surface cleaning apparatus, such as when a stairs or a smaller or crowded area is to be cleaned, according to the user's preference.

In some embodiments, the at least one cyclonic separation stage may comprise a cyclone chamber having at least one material outlet, a divider plate associated with the material outlet and an associated material collection chamber in flow communication with the material outlet.

In some embodiments, the material collection chamber may be positioned below the material outlet. In a further embodiment, the divider plate may be positioned in the material outlet.

In some embodiments, the material collection chamber may be movable relative to the cyclone chamber. In a further embodiment the material collection chamber may be removable from the at least one cyclone chamber.

In some embodiments, the material collection chamber may have a portion that is openable. In a further embodiment, the portion that is openable may be a bottom wall. Such embodiments may be advantageous because the wheeled base may prevent accidental opening of the material collection chamber.

In some embodiments, the suction motor may be positioned laterally spaced from the at least one cyclonic separation stage. Accordingly, the surface cleaning apparatus may have a relatively wide stance and low center of mass, and therefore may have increased stability.

In some embodiments, the cleaning unit has a front end having the dirty fluid inlet and the front end of the cleaning unit is positioned at a front end of the wheeled base and the suction motor is positioned rearward of the at least one cyclonic separation stage.

In some embodiments, the wheeled base may have a length greater than its width. In further embodiments, the wheeled base may be generally polygonal, and preferably generally triangular in shape. Such embodiments may be advantageous because the surface cleaning apparatus may have both increased maneuverability and increased stability.

In some embodiments, the wheeled base may have at least one front wheel and at least two rear wheels, the rear wheels may have a larger diameter then the at least one front wheel and the at least one front wheel may be steerable. Such embodiments may be advantageous because the larger rear wheels may provide the wheeled base with increased stability, and the steerable front wheel may provide the wheeled base with increased maneuverability. Alternately, the front wheels may have a larger diameter or essentially the same diameter as the rear wheels.

In some embodiments, the wheeled base may have at least one front wheel and at least two rear wheels and the rear wheels may have a larger diameter then the at least one front wheel.

In some embodiments, the wheeled base may have at least one front wheel and at least two rear wheels and the rear wheels may have a smaller diameter then the at least one front wheel.

In some embodiments, the at least one front wheel may be steerable.

In some embodiments, the wheeled base may have rear wheels that are positioned outwardly of an area occupied by the cleaning unit when the cleaning unit is mounted on the wheeled base. Alternately, or in addition, the wheeled base may have front wheels that are positioned outwardly of an area occupied by the cleaning unit when the cleaning unit is mounted on the wheeled base. Such embodiments may be advantageous because the wheeled base may have a relatively wide stance, thereby providing greater stability to the

surface cleaning apparatus. Additionally, the surface cleaning apparatus may be relatively close to the ground, and may therefore have a lower center of mass and increased stability.

In some embodiments, the cleaning unit may have a front end having a fluid inlet downstream from the dirty fluid inlet and the front end of the cleaning unit is positioned at a front end of the wheeled base.

In some embodiments, the cleaning unit may be lockably receivable on the wheeled base.

In some embodiments, the wheeled base may have at least one front wheel having a diameter of 1 to 3 inches and at least two rear wheels having a diameter of 1 to 3 inches.

In some embodiments, the cleaning unit may have a carry handle and/or a shoulder strap.

In some embodiments, the wheeled base may have at least one front wheel and at least two rear wheels, and the cleaning unit is receivable on an open platform.

In some embodiments, the wheeled base may have an absence of operating components.

It will be appreciated by a person skilled in the art that a surface cleaning apparatus may embody any one or more of the features contained herein and that the features may be used in any particular combination or sub-combination.

BRIEF DESCRIPTION OF THE DRAWINGS

The drawings included herewith are for illustrating venous examples of articles, methods, and apparatuses of the teaching of the present specification and are not intended to limit the scope of what is taught in any way.

In the drawings:

FIG. **1** is a perspective view of an embodiment of a surface cleaning apparatus of the present invention;

FIG. **2** is a front view of the embodiment of FIG. **1**;

FIG. **3** is a side view of the embodiment of FIG. **1**;

FIG. **4** is a top view of the embodiment of FIG. **1**;

FIG. **5** is a perspective view of the embodiment of FIG. **1**, showing a surface cleaning unit removed from a wheeled base;

FIG. **6** is a side view of the embodiment of FIG. **1**, showing a surface cleaning unit removed from a wheeled base;

FIGS. **7-9** are cross-sections taken along line **7-7** in FIG. **1**, showing alternate configurations of a cleaning unit;

FIG. **10** is a perspective illustration of an alternate embodiment of a surface cleaning apparatus of the present invention, showing a lid in an open position;

FIG. **11** is a perspective view of another embodiment of a surface cleaning apparatus;

FIG. **12** is another perspective view of the surface cleaning apparatus of FIG. **11**;

FIG. **13** is a perspective view of the surface cleaning apparatus of FIG. **11** with a surface cleaning unit detached;

FIG. **14** is another perspective view of the surface cleaning apparatus of FIG. **11** with a surface cleaning unit detached;

FIG. **15** is a schematic representation of another embodiment of a surface cleaning apparatus;

FIG. **16** is a schematic representation of the surface cleaning apparatus of FIG. **15** with a surface cleaning unit detached;

FIG. **17** is a schematic representation of another embodiment of a surface cleaning apparatus;

FIG. **18** is a perspective view of another embodiment of a surface cleaning apparatus;

FIG. **19** is another perspective view of the surface cleaning apparatus of FIG. **18** with a cyclone bin assembly removed;

FIG. **20** is a perspective view of the surface cleaning apparatus of FIG. **18** with a surface cleaning unit detached and a cyclone bin assembly removed from the surface cleaning unit; and,

FIG. **21** is a bottom perspective view of the cyclone bin assembly of the surface cleaning apparatus of FIG. **18** in the open position.

DESCRIPTION OF VARIOUS EMBODIMENTS

Various apparatuses or processes will be described below to provide an example of an embodiment of each claimed invention. No embodiment described below limits any claimed invention and any claimed invention may cover processes or apparatuses that differ from those described below. The claimed inventions are not limited to apparatuses or processes having all of the features of any one apparatus or process described below or to features common to multiple or all of the apparatuses described below. It is possible that an apparatus or process described below is not an embodiment of any claimed invention. Any invention disclosed in an apparatus or process described below that is not claimed in this document may be the subject matter of another protective instrument, for example, a continuing patent application, and the applicants, inventors or owners do not intend to abandon, disclaim or dedicate to the public any such invention by its disclosure in this document.

Portable Cleaning Unit Construction

The following is a description of portable cleaning unit constructions that may be used by itself in any surface cleaning apparatus or in any combination or sub-combination with any other feature or features disclosed herein.

Referring to FIGS. **1-4**, an embodiment of a surface cleaning apparatus **10** of the present invention is shown. Surface cleaning apparatus **10** may be a canister type vacuum cleaner, a Shop-Vac™ type vacuum cleaner, or another type of vacuum cleaner that may be mounted to a wheeled base. Surface cleaning apparatus **10** comprises a dirty fluid inlet **12**, a clean air outlet **14**, and a fluid flow path extending therebetween. A portable cleaning unit **16** is provided in the fluid flow path. Cleaning unit **16** comprises at least one cyclonic separation stage **18** for removing dirt from air, or for removing liquid from air or to pick up liquid. Cleaning unit **16** further comprises a suction motor **20** for drawing fluid from the dirty fluid inlet **12** to the clean air outlet **14**.

Dirty fluid inlet **12** is provided in a member **34**. In the embodiment shown in FIGS. **1-6**, member **34** is a hose. In the embodiment shown in FIGS. **7-10**, member **34** is a nozzle. In other embodiment, member **34** may be, for example, a surface cleaning head. It will be appreciated that a flexible hose, a rigid wand or other attachment may be affixed or removably affixed to portable cleaning unit **16**.

Referring to the exemplified embodiments of FIGS. **7-9**, from dirty fluid inlet **12**, fluid is directed to cleaning unit **16**. Cleaning unit **16** may be of a variety of configurations. In the embodiment of FIGS. **7** and **8**, cleaning unit **16** comprises a single cyclonic cleaning stage **18** preferably comprising a single cyclone housed in a first housing **44**, and a filter assembly **38** and motor **20** housed in a second housing **46** adjacent the first housing. Accordingly, in this embodiment, the suction motor **20** is positioned laterally adjacent and laterally spaced from the cyclonic cleaning stage **18**. In the embodiment of FIG. **9**, cleaning unit **16** comprises first **18**

and second **48** cleaning stages housed in first housing **44**, and filter assembly **38** and motor **20** housed in second housing **46** laterally adjacent the first housing. In this embodiment, motor **20** is positioned laterally spaced from and laterally adjacent both of first **18** and second **48** cleaning stages. It will be appreciated that portable cleaning unit may utilize one or more cyclonic cleaning stages, each of which may comprise a single cyclone or a plurality of cyclones in parallel. In any embodiment, one or more additional cleaning stages may be used such as one or more filters.

For example, in the embodiments exemplified, cyclonic cleaning stage **18** includes a single cyclone chamber **22**. Cyclone chamber **22** comprises a dirty air inlet **24**, a separated or dirty material outlet **26**, and a clean air outlet **28**. A dirty or separated material collection chamber **30** is mounted below dirty material outlet **26**, for collecting material removed from the air in cyclone chamber **22**. In the embodiment shown, a divider plate **32** is associated with dirty material outlet **26**. Divider plate **32** is positioned below the dirty material outlet **26**, within the material collection chamber **30**. It will be appreciated that a divider plate may be used any one or more of the cyclones and it may be of any configuration and located at any position known in the art. Alternately, a divider plate may not be used and the cyclone chambers may be of any design.

Material collection chamber **30** may be of any configuration and may be emptied by a user in any manner known in the art. In the embodiment shown in FIGS. **7** and **8**, material collection chamber **30** has a bottom **31** that is openable by pivoting about a pivot pin **33**. In this embodiment, material collection chamber further comprises a latch **35**, for locking bottom **31** in place, and a button **37** for releasing the latch. In other embodiments, material collection chamber **30** may be emptied in another manner. For example, material collection chamber **30** may be movable or removable from surface cleaning apparatus **10**, such that it may be emptied, or may have another portion that opens. It may be removable from portable cleaning unit with the associated cyclone or cyclones as a sealed unit. See for example the embodiments of FIGS. **14** and **19**.

In some embodiments, a filter or a screen may be associated with clean air outlet **28**. For example, as shown in FIG. **8**, a cylindrical housing **53** may be mounted on clean air outlet **28** and may have a plurality of openings **55** which are provided with a screen (e.g. a wire mesh). Any such screen or filter known in the art may be used.

In the embodiment of FIGS. **7** and **8**, air is directed from cyclone chamber **22** out of clean air outlet **28**, and into an airflow passage **36**, which extends between first housing **44** and second housing **46**. From airflow passage **36**, air is directed through a filter assembly **38**, which, in the embodiments exemplified, comprises a pre-motor foam filter **40**, and a screen filter **42**. From filter assembly **38**, air is drawn past motor **20**, and out of clean air outlet **14**.

In the exemplified embodiment of FIG. **9**, from cyclone chamber **22**, air is directed out of clean air outlet **28** and into second cyclonic cleaning stage **48**. Second cyclonic cleaning stage **48** comprises a plurality of second stage cyclones **50** in parallel. Each second stage cyclone comprises an inlet (not shown) in fluid communication with clean air outlet **28**, and an outlet **52** in fluid communication with airflow passage **36**. Each second stage cyclone comprises a cyclonic cleaning region **54**, and a dirt collection region **56**. From outlets **28**, air is directed into airflow passage **36**, and into filter assembly **38**. From filter assembly **38**, air is drawn past motor **20**, and out of clean air outlet **14**.

In other embodiments, cleaning unit **16** may be otherwise configured. For example, cleaning unit **16** may not comprise a filter assembly, or may comprise a plurality of filter assemblies. Additionally, cleaning unit **16** may comprise additional cleaning stages, which may be positioned laterally adjacent each other or above each other.

In the embodiments shown, the first **44** and second **46** housings are integrally molded. In other embodiments, the first **44** and second **46** housings may be separately manufactured and then secured together, such as by a common base or by gluing, welding or mechanically securing the two housings together. In some embodiments, first **44** and/or second **46** housing may be provided with an openable lid **45**, as shown in FIG. **10**. When a user opens lid **45**, the user may have access to components housed in first **44** and/or second housing **46**. For example, as shown in FIG. **10**, lid **45** may be provided with a plurality of flanges **47**, which are mounted on flanges **49** provided on housings **44** and/or **46**. Flanges **47** are pivotally connected together by pivot pins **51**. Accordingly, lid **45** may be pivoted from the closed position, as shown in FIGS. **1-9**, to the opened position, as shown in FIG. **10**.

Referring to FIG. **11**, another embodiment of a surface cleaning apparatus **110** is shown. Surface cleaning apparatus **110** is generally similar to surface cleaning apparatus **10**, and analogous features are identified using like reference characters indexed by **100**.

Surface cleaning apparatus **110** comprises a dirty fluid inlet **112**, a clean air outlet **114**, and a fluid flow path extending therebetween. A portable cleaning unit **116** is provided in the fluid flow path. Cleaning unit **116** comprises at least one cyclonic separation stage **118** for removing dirt from air, or for removing liquid from air or to pick up liquid. Cleaning unit **116** further comprises a suction motor **120** for drawing fluid from the dirty fluid inlet **112** to the clean air outlet **114**. Dirty fluid inlet **112** is provided in a member **134**, which in this embodiment is a surface cleaning head.

In this embodiment the cleaning unit **116** is mounted to a wheeled base **158**. Wheeled base **158** comprises a plurality of wheels **160**, and a cradle **162**, which receives cleaning unit **116**. The portable cleaning unit **116** can be operated while seated in the cradle **162** (FIGS. **11** and **12**) and can be lifted out of the cradle **162** and used as a hand carriable apparatus (FIG. **13**).

Referring to FIG. **14**, in this embodiment the cyclone cleaning stage **118** includes a cyclone chamber **122**. Cyclone chamber **122** comprises a dirty air inlet **124**, a separated or dirty material outlet **126**, and a clean air outlet **128** (FIG. **14**). A dirty or separated material collection chamber **130** is beside the cyclone chamber **122** and in communication with the dirty material outlet **126**, for collecting material removed from the air in cyclone chamber **122**.

Material collection chamber **130** may be of any configuration and may be emptied by a user in any manner known in the art. In the embodiment shown in FIG. **14**, material collection chamber **130** has a bottom **131** that is openable by pivoting about a pivot pin **133**. In this embodiment, material collection chamber further comprises a latch **135**, for locking bottom **131** in place, and a button **137** for releasing the latch. In this embodiment the material collection chamber **130** may be movable or removable from surface cleaning apparatus **110** and from the portable cleaning unit **116**, such that it may be emptied, and is removable from portable cleaning unit **116** with the associated cyclone **118** or cyclones as a sealed unit.

Referring to FIGS. **18-21**, another embodiment of a surface cleaning apparatus **510** is shown. Apparatus **510** is

generally similar to surface cleaning apparatus **10**, and analogous features are identified using like reference characters indexed by **500**.

Referring to FIG. **18**, surface cleaning apparatus **510** comprises a dirty fluid inlet **512**, a clean air outlet **514**, and a fluid flow path extending therebetween. A portable cleaning unit **516** is provided in the fluid flow path. Cleaning unit **516** comprises at least one cyclonic separation stage **518** (FIG. **21**) for removing dirt from air, or for removing liquid from air or to pick up liquid. Cleaning unit **516** further comprises a suction motor **520** (FIG. **20**) for drawing fluid from the dirty fluid inlet **512** to the clean air outlet **514**. Dirty fluid inlet **512** is provided in a member **534**, which in this embodiment is a surface cleaning head.

In this embodiment the cleaning unit **516** is mounted to a wheeled base **558**. Wheeled base **558** comprises a plurality of wheels **560**, and a cradle **562** (FIG. **20**), which receives cleaning unit **516**. The portable cleaning unit **516** can be operated while seated in the cradle **562** (FIG. **18**) and can be lifted out of the cradle **562** and used as a hand carriable apparatus (FIG. **20**).

Referring to FIG. **21**, in this embodiment the cyclone cleaning stage **518** includes a cyclone chamber **522**. Cyclone chamber **522** comprises a dirty air inlet **524** (FIG. **19**), a separated or dirty material outlet **526**, and a clean air outlet **528**. A dirty or separated material collection chamber **530** is beside the cyclone chamber **522** and in communication with the dirty material outlet **526**, for collecting material removed from the air in cyclone chamber **522**.

Material collection chamber **530** may be of any configuration and may be emptied by a user in any manner known in the art. In the embodiment shown in FIG. **21**, material collection chamber **530** has a bottom **531** that is openable by pivoting about a pivot pin **533**. In this embodiment, material collection chamber further comprises a latch **535**, for locking bottom **531** in place, and a button **537** for releasing the latch.

Wheeled Base Construction

The following is a description of a wheeled base construction that may be used by itself in any surface cleaning apparatus or in any combination or sub-combination with any other feature or features disclosed herein.

Referring again to FIGS. **1-4**, portable cleaning unit **16** is mounted to a wheeled base **58**. Wheeled base **58** comprises a plurality of wheels **60**, and a cradle **62**, which receives cleaning unit **16**.

In some embodiments, cleaning unit **16** may be permanently mounted to wheeled base **58**, for example via one or more bolts. In other embodiments, cleaning unit **16** may be removably mounted to wheeled base **58**. For example, a user may remove cleaning unit **16** from wheeled base in order to maneuver cleaning unit **16**, or to empty material collection chamber **30**. In such embodiments, cleaning unit **16** is portable. For example, as shown in FIGS. **5** and **6**, cleaning unit **16** may be removed from wheeled base **58** by lifting cleaning unit **16** off of wheeled base **58**.

In any embodiment, surface cleaning apparatus **10** may comprise a handle **64**, and/or a shoulder strap **65** (shown in FIG. **8**) for maneuvering cleaning unit **16** when it is removed from wheeled base **58**. In some embodiments, handle **64** may be integrally formed with one or both of first **44** and second **46** housings.

Surface cleaning apparatus **10** may further comprise a locking member (not shown), such that cleaning unit **16** may be lockably received on wheeled base **58**. The locking member may comprise any suitable locking member known in the art, such as, for example, a quick release latch, a friction or snap fit, a set screw, a tie down strap (e.g., a strap which may be wrapped around cleaning unit **16**) or the like. The lock may be actuatable by a foot pedal. Alternately wheeled base **58** may have side wall extending up around cradle **62** within which portable cleaning unit **16** is received. It will be appreciated that cradle **64** may be any member on which portable cleaning unit **16** may be received or secured, such as a flat base with or without side walls.

In the embodiments exemplified, wheeled base **58** comprises a front wheel **66**, and two rear wheels **68***a*, **68***b*. Accordingly, cradle **62** is a platform that is generally polygonal and, preferably, generally triangular in configuration. This configuration may provide increased maneuverability to surface cleaning apparatus **10**. In other embodiments, wheeled base **58** may comprise another number of wheels. For example, in some embodiments, wheeled base **58** may comprise two front wheels and two rear wheels. It will be appreciated that, as exemplified, housings **44**, **46** may be oriented on cradle **62** with the suction motor at the rearward end of portable cleaning unit **16** and the inlet to portable cleaning unit **16** at the forward end of the front housing. In alternate configurations, housings **44**, **46** may be positioned side by side. Further, if more than two housings **44**, **46** are provided, then the housings may be arranged linearly, in a triangular configuration or any other desired configuration.

In some embodiments, front wheel **66** is rotatably mounted about a vertical axis to cradle **62** (e.g., is a caster wheel), and rear wheels are non-rotatably mounted about a vertical axis. Accordingly, front wheel **66** may be steerable. In other embodiments, all of front wheel **66** and rear wheels **68** may be caster wheels, or may be non-rotatably mounted wheels.

In some embodiments, wheeled base **58** has a length greater than its width. That is, the distance L between front wheel **66** and axis **67** extending between rear wheels **68***a*, **68***b*, is greater than the distance W between rear wheels **68***a*, **68***b*, along axis **67**. In other embodiments, wheeled base **58** may have a width W greater than its length L, or may have width W equal to its length L.

In the embodiments shown, front wheel **66** is of a smaller diameter than rear wheels **68***a*, **68***b*. Alternately, rear wheels **68***a*, **68***b* may be smaller than front wheel **66**. Preferably, both the front and rear wheels are each relatively large. For example, in some embodiments, front wheel(s) may have a diameter of between about 0.5-4 inches, preferably 1-3 inches and more preferably 1.5-2.5 inches. In some embodiments, rear wheels may have a diameter of between about 0.5-4 inches, preferably 1-3 inches and more preferably 1.5-2.5 inches. In one particular embodiment, both front wheel(s) **66** and rear wheels **68***a*, **68***b* have a diameter in the same range. Such embodiments may be advantageous to provide surface cleaning apparatus **10** with increased maneuverability and with increased stability.

In the embodiments shown, wheeled base **58** is configured such that, when cleaning unit **16** is mounted on cradle **62**, rear wheels **58** are positioned outwardly of cleaning unit **16**. That is, rear wheels **58** are separated by a distance W that is greater than the width W' of cleaning unit **16**. Such embodiments may provide surface cleaning apparatus **10** with a wider stance, and accordingly with increased stability. Additionally, because rear wheels **68** are positioned outwardly of cleaning unit **16**, rear wheels **68** may be provided with an increased diameter, as previously mentioned, without increasing the distance between cleaning unit **16** and a surface such as a floor. Accordingly, the center of mass of cleaning unit **16** may remain low, which further increases the stability of surface cleaning apparatus **10**.

In some embodiments, wheeled base **58** may comprise operating components of surface cleaning apparatus **10**, such as a suction motor (see FIG. **17**). For example, wheeled base may comprise a portion that is provided in the fluid flow path, and includes a filter assembly (not shown). In other embodiments, as exemplified, wheeled base **58** may not comprise any operating components (i.e. wheeled base has an absence of operating components).

In the embodiments shown, cleaning unit **16** is oriented such that dirty fluid inlet **12** is provided at a front end **70** of surface cleaning apparatus **10**, adjacent front wheel **66**, and suction motor **20** is provided at a rear end **72** of surface cleaning apparatus **10**, adjacent rear wheels **68**. In other embodiments, cleaning unit **16** may be otherwise oriented. For example, suction motor **20** may be provided at front end **70**, and dirty fluid inlet **12** may be provided at rear end **72**. Alternatively, cleaning unit **16** may be oriented such that suction motor **20** and dirty fluid inlet **12** are equally spaced from front wheel **66** and rear wheels **68**. That is, cleaning unit **16** may be positioned substantially sideways in wheeled base **58**.

In some embodiments, portable cleaning unit **16** may be connected to a remote surface cleaning head by connected in air flow communication with the wheeled base, wherein the remote surface cleaning head may be connected or removably connected in air flow communication with the wheeled base. Accordingly, when portable cleaning unit **16** is placed on the wheeled base, it may be automatically connected in air flow communication with the wheeled base (see for example FIGS. **15**, **17** and **19**) or the user may have to connect portable cleaning unit **16** in air flow communication with the wheeled base, such as by connecting a hose of portable cleaning unit **16** in air flow communication with an air outlet of the wheeled base (see for example FIGS. **5** and **6**).

As exemplified in FIGS. **5** and **6**, wheeled base **62** may comprise a floor cleaning mount **82** coupled to cradle **62**. A first end **84** of mount **82** is configured for receiving member **34**, which, in the embodiments exemplified in FIGS. **1-6**, is a hose. A second end **86** of mount **82** is configured for receiving another member, for example a remote surface cleaning head that is preferably at the distal end of a wand and a flexible hose extends between the wand and mount **82** (not shown). It will be appreciated that portable cleaning unit **16** may be designed such that the inlet of the portable cleaning unit automatically is connected in flow communication with mount **82** when portable cleaning unit **16** is positioned on wheeled base **58**, such as by use of an inlet port aligned with first end **84** or a rigid pipe that is fittable thereon. Alternately, as exemplified, a flexible hose **34** that is manually insertable may be used. An advantage of this design is that the attachment member for a wand or the like is provided on the platform and not the portable cleaning unit. Therefore, the wand may be used to pull wheeled base **58** without risk of pulling portable cleaning unit **16** off of wheeled base **58**. Further, preferably the attachment point is close to the floor, preferably at the level of cradle **62**, thereby lowering the point at which wheeled base **58** may be pulled and increasing the stability of wheeled base **58** when it is being pulled.

It will be appreciated that in the portable mode, a wand or flexible hose and wand, or other member known in the art may be attached to hose **34** or hose **34** may be removed and the wand or flexible hose and wand, or other member known in the art may be attached directly to the inlet to housing **44**.

In some embodiments, one or more accessories, such as cleaning brush **74** and wand extension **76** may be secured to the upper surface of lid **45**, such as by means of mounts **78**. Accordingly, extension **76** may be configured to function as a handle (e.g. central section **76** may be arcuate in shape or be spaced from lid **45**), to define an opening **80** between the upper surface of lid **34** such that extension **76** of brush **74** may be a carry handle **64** for the vacuum cleaner. Alternately, extension **76** may be configured to seat on handle **64** and permit handle **64** to be used when brush **74** is mounted on portable cleaning unit **16**. In other embodiments, one or more accessories may be provided in a recess in the lower surface of portable cleaning unit **16** or in an upper surface of wheeled base **58**.

Removable Dirt Chamber

The following is a description of a portable cleaning unit having a removable dirt chamber that may be used by itself in any surface cleaning apparatus or in any combination or sub-combination with any other feature or features disclosed herein.

As exemplified in FIG. **14**, the cyclone chamber **118** and material collection chamber **130** may be constructed as a one piece assembly and are referred to collectively as a cyclone bin assembly **188**. In accordance with this aspect, cyclone bin assembly **188** may be removed from the portable surface cleaning unit **116** when the portable surface cleaning unit **116** is seated on the base **158** (FIGS. **14** and **19**) and when the portable surface cleaning unit **116** is separated from the base **158** (FIG. **13**). This may allow a user to remove only the cyclone bin assembly **188**, for example for emptying, regardless of whether the surface cleaning unit **116** is docked on the base **158**.

As exemplified in FIGS. **18-21**, the material collection chamber **530** may be movable or removable from surface cleaning apparatus **510** and from the portable cleaning unit **516**, such that it may be emptied, and is removable from portable cleaning unit **516** with the associated cyclone **518** or cyclones as a sealed unit.

In the illustrated embodiment, the cyclone chamber **518** and material collection chamber **530**, referred to collectively as a cyclone bin assembly **588**, can be removed from the portable surface cleaning unit **516** when the portable surface cleaning, unit **516** is seated on the base **558** (FIG. **19**) and when the portable surface cleaning unit **516** is separated from the base **558** (FIG. **20**). This may allow a user to remove only the cyclone bin assembly **588**, for example for emptying, regardless of whether the surface cleaning unit **516** is docked on the base **558**.

Referring to FIG. **18**, in the illustrated embodiment, when the surface cleaning unit **516** is mounted on the base **558** the air flow path between the surface cleaning head **534** and the suction motor in the surface cleaning unit **516** includes a rigid conduit **589**, a flexible hose **590***a*.

In this embodiment, the first hose **190***a* is connected to the surface cleaning unit **516** and extends between a downstream end **592***a* (with reference to the direction of airflow through the hose **590***a*) that is connected to the surface cleaning unit **516** and the rigid conduit **589**. In this configuration, when the surface cleaning unit **516** is removed from the base **558** the hose **590***a* comes with the surface cleaning unit **516** (FIG. **20**).

It will be appreciated that, in alternate embodiments, material collection chamber **130** may be a separate unit and may be removable without the cyclone chamber. Alternately, or in addition, material collection chamber **130** may be removed with the handle of the portable cleaning unit. An advantage of this design is that the handle of the portable

cleaning unit may be usable to manipulate the material collection chamber **130** or cyclone bin assembly when removed for emptying.

Automatic Portable Cleaning Unit Hose Connection

The following is a description of automatically connecting a hose of the portable cleaning unit in air flow communication with the base when the portable cleaning unit is placed on the base that may be used by itself in any surface cleaning apparatus or in any combination or sub-combination with any other feature or features disclosed herein.

Referring to FIG. **12**, in the illustrated embodiment, when the surface cleaning unit **116** is mounted on the base **158**, the air flow path between the remote surface cleaning head **134** and the suction motor in the surface cleaning unit **116** includes a rigid conduit or wand **189**, a first flexible hose **190***a* and a second flexible hose **190***b* (see also FIG. **14**) positioned downstream from the first hose **190***a*.

The first hose **190***a* extends from its upstream that is connected to rigid conduit **189** to its downstream end **192***a* (with reference to the direction of airflow through the hose **190***a*) that is connected to the base **158**. The first hose **190***a* has a diameter **191***a*. While the first hose **190***a* may be removably connectable to the base **158**, first hose **109***a* remains attached to the base **158** regardless of the position of the surface cleaning unit **116** (FIGS. **12** and **14**).

Referring to FIG. **13**, the second hose **190***b* is attached to and is removable with the surface cleaning unit **116**. A downstream end **192***b* of the hose **190***b* is attached to the air inlet **124** of the cyclone chamber **118** and the upstream end **193***b* is removably connectable in air flow communication with the air outlet of the base **158** (e.g., opening **195** of coupling **194**). When the surface cleaning unit **116** is removed from the base **158**, the upstream or inlet end **193***b* of the hose **190***b* can be used as a second or auxiliary dirty air inlet for drawing fluid and debris into the air flow path. Optionally, auxiliary cleaning tools may be attached to the inlet end **193***b* of the hose **190***b*. In this configuration, the first hose **190***a* does not form part of the airflow path to the surface cleaning unit **116**.

The second hose **190***b* is shown in a wrapped or storage position in FIG. **13** in which it is wrapped around part of the surface cleaning unit **116**. When the surface cleaning unit **116** is in use as a portable cleaning unit the second hose **190***b* can be unwound and extended. Preferably, the second hose **190***b* is extensible to increase its cleaning range. The second hose **190***b* has a diameter **191***b*, which optionally may be smaller than diameter **191***a*. This may help reduce the overall size of the surface cleaning unit **116** and may help it nest on the base **158**. However, it is preferred that they have the same or similar diameters so as to provide an air flow path that has a generally constant diameter. The hoses **190***a* and **190***b* may be generally similar. Alternatively, they may have different properties. For example, the first hose **190***a* may be non-extensible and relatively stiff (to allow a user to pull the hose **190***a* to advance the base **158** across the surface) and the second hose **190***b* may be extensible and less stiff.

Referring to FIG. **12**, when the surface cleaning unit **116** is seated on the base **158**, the inlet end **193***b* of the second hose **190***b* is connected in air flow communication with the downstream end **192***a* of the first hose **190***a*, using coupling **194**, thereby re-establishing air flow communication between the cleaning head **134** and the surface cleaning unit **116**.

Referring to FIG. **13**, the coupling **194** may be any suitable connector, and in the example illustrated, is an elbow-type connector with a downstream opening **195** surrounded by a sealing face **196**. The surface cleaning unit **116** may be configured such that the upstream end **193***b* of the second hose **190***b* is aligned with the opening **195** and seals against seal face **196** to establish the air flow path when the surface cleaning unit **116** is placed on base **158**. Accordingly, sealing face **196** is sealed by the inlet end **193***b* automatically when the surface cleaning unit **116** is inserted vertically onto the base **158**.

In order to provide a seal, one or both of base **158** and surface cleaning unit **116** may be configured to provide sufficient abutment therebetween so that an air tight seal is created. As exemplified in FIG. **13**, the rear face of coupling **194** is angled and a mating angled surface may be provided on portable cleaning unit **116**. Accordingly, when portable cleaning unit is placed on base **158**, portable cleaning unit is urged rearwardly and the rear end of portable cleaning unit **116** may abut the rear wall of base **158** thereby pressing the upstream end **193***b* of the second hose **190***b* against the opening **195** and optionally compressing a gasket or the like to create an air tight seal.

If the cyclone bin assembly is removable, then the remaining body of portable cleaning unit **116** may also or alternately be angled to press the cyclone inlet **524** against opening **195** (see for example FIG. **19**).

Valve to Switch Between Hoses

The following is a description of alternate air flow paths that may be used by itself in any surface cleaning apparatus or in any combination or sub-combination with any other feature or features disclosed herein.

In accordance with this aspect, the portable cleaning unit may incorporate a hose which is different to first hose **190***a*. For example, it may have a smaller diameter. Accordingly, it may be preferred not to use such a hose in the air flow path when portable cleaning unit **116** is mounted on the base since the smaller diameter hose would reduce air flow and increase the back pressure. However, the smaller diameter hose may be lighter and easier to use in a portable mode (i.e., when surface cleaning unit **116** is removed from base **158**). In such a case, a valve may be provided to selective connect the cyclone air inlet with the different hoses or air flow paths. The valve may be manually operable or automatically operable. For example, the valve may be actuated automatically when the surface cleaning unit **116** is removed from the base or when the smaller diameter hose is deployed from a storage position for use.

Accordingly, if second hose **190***b* has a smaller diameter into the air flow path when the surface cleaning unit **116** is docked, a user may optionally detach the downstream end **192***b* of the second hose **190***a* from the air inlet **124** (thereby removing the second hose **190***b* from the air flow circuit) and can reposition the downstream end **192***a* of the hose **190***a* to be connected directly to the inlet **124**. Alternately, inlet **124** could be automatically connected in air flow communication with opening **195** when surface cleaning unit **116** is placed on base **158**.

Optionally, instead requiring a user to reconfigure a hose, the surface cleaning apparatus may include a valve positioned in the air flow path that allows the air flow to be switched between the first and second hoses. In this configuration, both hoses can remain attached to their respective components, and the air flow path to the surface cleaning unit **116** can include either of the first and second hoses. Optionally, one of the hoses may be detachable and connectable to the other of the hoses, such that one large hose is created and forms the air flow path to the surface cleaning unit.

Referring to FIGS. **15** and **16**, a schematic representation of another embodiment of a surface cleaning apparatus **210** is illustrated. Surface cleaning apparatus **210** is generally similar to apparatus **10**, and analogous features are identified using like reference characters indexed by **200**.

In this embodiment, the surface cleaning unit **216** includes a valve **297** provided in the air flow path, upstream from the air inlet of the cyclone chamber **218**. The valve is connected to the downstream end **292***b* of the second hose **290***b*, and the valve **297** and second hose **290***b* are removable with the surface cleaning unit **216** (FIG. **16**). When the surface cleaning unit **216** is seated on base **258**, the valve can connect to coupling **294** automatically or manually. An actuating lever **298** allows a user to change to position of the valve **297** so that, when the surface cleaning unit **216** is docked, the first hose **290***a* is connected in air flow communication with the surface cleaning unit **216** and the second hose **290***b* is sealed (but remains attached and does not require re-configuration). Optionally, the valve **297** can be automatically actuated when the surface cleaning unit **216** is placed on or removed from the base **258** to adjust the air flow path accordingly.

Use of Dual Suction Motors

The following is a description of the use of dual suction motors that may be used by itself in any surface cleaning apparatus or in any combination or sub-combination with any other feature or features disclosed herein.

Optionally, the base of the surface cleaning apparatus may include some operating components of the surface cleaning apparatus, including, for example a suction motor, the power cord and a cord reel. Providing components in the base may help reduce the weight and/or overall size of the portable surface cleaning unit.

Referring to FIG. **17**, a schematic representation of another embodiment of a surface cleaning apparatus **310** is shown. The surface cleaning apparatus **310** is generally similar to surface cleaning apparatus **10**, and analogous features are identified using like reference characters indexed by **300**.

In the illustrated embodiment, the surface cleaning apparatus **310** includes a base **358** and a surface cleaning unit **316** that can be mounted on the base **358** (as illustrated), and can be detached to be used separately from the base **358**.

The surface cleaning unit **316** includes a cyclone bin assembly **388** that has a cyclone chamber **318** and a dirt collection chamber **330**. The cyclone chamber **318** has an air inlet **324** and an air outlet **328**. A dirt outlet in the form of a slot **326** provides communication between the cyclone chamber **318** and the dirt collection chamber **330**.

A first suction motor **320***a* is provided in the surface cleaning unit **316**. An air flow conduit **400** provides an air flow path between the air outlet of the pre-motor filter housing and the suction motor **320***a*. Accordingly, a pre-motor filter **338** is provided in the air flow path between the air outlet **328** of the cyclone chamber **318** and the motor **320***a*.

In the illustrated embodiment the electrical cord **401** is wound around a cord reel **402** that is provided in the base **358**. In addition, a second suction motor **320***b* is provided in the base **358** and is in electrical communication with the power cord **401** such that the second suction motor **358** can be powered by an external power supply (e.g. a wall socket). A base conduit **403** provides air flow communication between the second suction motor **320***b* and a port **404** on the upper surface of the base **358**.

When the surface cleaning unit **316** is mounted on the base **358**, a mating port **406** on the surface cleaning unit **316** may connect to and seal the port **404**. Preferably, a valve **407** (e.g. any suitable valve such as a two position valve and a ball valve) is provided, e.g., in the air flow path between the filter **338** and the motor **320***a*. The valve **407** is also in air flow communication with the port **406**, and is operable to selectively connect either port **406** or conduit **400** in airflow communication with the cyclone bin assembly **388**. When conduit **400** is connected, suction motor **320***a* may be used draw air through the surface cleaning unit **316** (and preferably motor **320***b* is not). When port **406** is connected, suction motor **320***b* may be used to draw air through the surface cleaning unit **316** (and preferably motor **320***a* is not). Preferably, the valve **407** is configured (for example via a biasing member or linkage member) so that when the surface cleaning unit **316** is lifted off the base **358** the valve **407** automatically seals port **406** and connects conduit **400**.

It will be appreciated that valve may be actuatable by other means, such as a member that is drivingly connected to the valve and the member is operable as the surface cleaning unit is paced and or removed from base **358**. It will be appreciated that motor **320***b* may be connected in air flow communication at an alternate location. For example, it could be downstream of motor **320***a*. Alternately, it could be a dirty air motor and located upstream of cyclone chamber **318**.

Because the electrical cord **401** is provided in the base **358**, when the surface cleaning unit **316** is detached from the base **358**, it may no longer be connected to the external power source (e.g. wall socket). To provide power to the surface cleaning unit **316** when it is detached, the surface cleaning unit **316** includes an on-board energy storage member, e.g., one or more batteries **405**. Alternatively, any other suitable energy storage member or power source can be used (fuel cell, combustion engine, solar cells, etc.). In the illustrated example, the batteries **405** provide DC power. In this configuration, when the surface cleaning unit **316** is detached from base **358**, the suction motor **320***a* may operate using DC power, and may operate solely on the power supplied by batteries **405**.

Optionally, when the surface cleaning unit **316** is re-attached to the base **358**, power from the base **358** can be transferred to the surface cleaning unit **316**, for example via detachable electrical connector **408**. Preferably, if an electrical connector **408** is provided the power received from the base **358** can be used to charge the batteries **405** to help ensure the batteries **405** are charged when the surface cleaning unit **316** is removed.

Alternatively, there need not be an electrical connection between the base **358** and the surface cleaning unit **316**. In such a configuration the batteries **405** may be charged via an alternate power source, or may be replaced with fresh batteries as needed. For example, the surface cleaning unit **116** may be provided with its own power cord, or the power cord **401** may be removable from base **358** and may be plugged into surface cleaning unit **116**.

Optionally, the suction motor **320***a* may be smaller and/or less powerful than the suction motor **320***b*. Making the suction motor **320***a* smaller and lighter than suction motor **320***b* may help reduce the overall size and weight of the surface cleaning unit **316**. For example, the suction motor **320***b* may be a 1000 watt motor, and the suction motor **320***a* may be a 600 watt motor. Reducing the power consumption of the suction motor **320***a* may also help prolong the amount of cleaning time that can be achieved using the batteries **405**, before they need to be replaced and/or recharged.

In the illustrated embodiment, because suction motor **320***b* is in the base **358** with the electrical cord, it may be an

AC motor that can run on AC power received from a wall socket. Motor **320***a* may be operated on DC power supplied by the batteries **405**.

In this configuration, a user may be able to select which suction motor **320***a* or **320***b* is to be used when the surface cleaning unit **316** is docked. For example, if performing a small job or if it is desirable to keep the noise level low a user may activate the smaller suction motor **320***a*. Alternatively, if performing a large job a user may select to use the suction motor **320***b* by activating the motor **320***b* and positioning the valve **407** as appropriate.

Dual Operational Mode for a Portable Surface Cleaning Unit

The following is a description of the use of a dual operational mode for a portable surface cleaning unit that may be used by itself in any surface cleaning apparatus or in any combination or sub-combination with any other feature or features disclosed herein.

Alternately, or in addition to providing a motor **320***b* in the base **358**, the suction motor **320***a* in the surface cleaning unit may be operable on current supplied by an on board energy storage member (e.g., batteries **405**) when removed from base **358** and may be operable on current supplied from base **358** when mounted thereon.

Accordingly, when removed from the base **358**, motor **320***a* may be operable on DC current supplied from batteries **405**. However, when mounted on the base **358** and electrical code **401** is plugged into an electrical outlet, current may be supplied from base **358** to motor **320***a*. The current may be AC, in which case, motor **320***a* may be operable on both AC and DC current (e.g., it has dual windings) or the AC current may be converted to DC current (such as by providing a power supply in one or both of the base **358** and the surface cleaning unit **116**).

Accordingly, for example, as shown in FIG. **17**, an electrical connector **408** may be used to power the suction motor **320***a* when the surface cleaning apparatus is docked on the base **358**. In this configuration the suction motor **320***a* may be configured to also run on AC power or a power supply or converter module **409** may be provided to convert the incoming AC power to DC power. Optionally, the convertor module **409** may be in the base **358** so that the connector **408** is provided with DC power.

It will be appreciated that the suction motor of the portable cleaning unit may be operable on different power levels. It may be operable on a first or higher power level when mounted to the base and operable on power supplied from the base (which may be AC or DC). It may be operable on a lower power level when removed from the base.

It will be appreciated that certain features of the invention, which are, for clarity, described in the context of separate embodiments or separate aspects, may also be provided in combination in a single embodiment. Conversely, various features of the invention, which are, for brevity, described in the context of a single embodiment or aspect, may also be provided separately or in any suitable sub-combination.

What has been described above has been intended to be illustrative of the invention and non-limiting and it will be understood by persons skilled in the art that other variants and modifications may be made without departing from the scope of the invention as defined in the claims appended hereto. The scope of the claims should not be limited by the preferred embodiments and examples, but should be given the broadest interpretation consistent with the description as a whole.

What is claimed is:

1. A surface cleaning apparatus comprising:

a) a base comprising or connectable to a power cord;

b) a portable cleaning unit removable from a position in which the portable cleaning unit is supported by the base and comprising at least one cyclonic separation stage, a first energy storage member and a portable cleaning unit suction motor; and,

c) a fluid flow path extending from a first dirty fluid inlet to a clean air outlet of the surface cleaning apparatus,

wherein the energy storage member may be charged when the portable cleaning unit is supported by the base

and wherein the base further comprises a suction motor which is used to provide motive power through the fluid flow path when the surface cleaning unit is switched on and when the portable cleaning unit is mounted on the base.

2. The surface cleaning apparatus of claim **1** wherein the portable cleaning unit further comprises a power cord.

3. The surface cleaning apparatus of claim **1**, wherein the power cord is removably electrically connected to the portable cleaning unit.

4. The surface cleaning apparatus of claim **3** wherein the power cord is also removably electrically connected to the base.

5. The surface cleaning apparatus of claim **4** wherein the power cord provides AC current to the base and the base provides current to the portable cleaning unit when the portable cleaning unit is supported by the base.

6. The surface cleaning apparatus of claim **5** wherein the base provides DC current to the portable cleaning unit when the portable cleaning unit is supported by the base.

7. The surface cleaning apparatus of claim **1** further comprising a power cord electrically connected to the base and wherein the power cord provides AC current to the base when connected to the base and the base provides current to the portable cleaning unit when the portable cleaning unit is supported by the base.

8. The surface cleaning apparatus of claim **7** wherein the base provides DC current to the portable cleaning unit when the portable cleaning unit is supported by the base.

9. The surface cleaning apparatus of claim **1** wherein the portable cleaning unit is powered solely by the first energy storage member when the portable cleaning unit is removed from the position in which the portable cleaning unit is supported by the base.

10. The surface cleaning apparatus of claim **1** wherein the first energy storage member comprises batteries.

11. The surface cleaning apparatus of claim **1** wherein the suction motor in the portable cleaning unit is not used to provide motive power to move fluid through the fluid flow path when the surface cleaning unit is switched on and when the portable cleaning unit is supported by the base.

12. The surface cleaning apparatus of claim **1** wherein the portable cleaning unit suction motor is a DC motor.

13. The surface cleaning apparatus of claim **12** wherein the base further comprises or is electrically connectable to a power cord, the base further comprises a circuit that receives AC current and outputs DC current and the portable cleaning unit is powered by DC current when the portable cleaning unit is supported by the base.

14. The surface cleaning apparatus of claim **1** wherein the base comprises a surface cleaning head.

15. A surface cleaning apparatus comprising:

a) a base comprising or connectable to a power cord;

b) a portable cleaning unit removable from a position in which the portable cleaning unit is supported by the base and comprising at least one cyclonic separation stage, a first energy storage member and a portable cleaning unit suction motor; and

c) a fluid flow path extending from a first dirty fluid inlet to a clean air outlet of the surface cleaning apparatus,

wherein the base further comprises a second energy storage member,

and wherein the first energy storage member may be charged by the second energy storage member when the portable cleaning unit is supported by the base.

16. A surface cleaning apparatus comprising:

a) a base;

b) a portable cleaning unit removable from a position in which the portable cleaning unit is supported by the base and comprising at least one cyclonic separation stage, an energy storage member and a portable cleaning unit suction motor; and,

c) a fluid flow path extending from a first dirty fluid inlet to a clean air outlet of the surface cleaning apparatus,

wherein the base further comprises a portion of the fluid path and has a base suction motor provided in the portion of the fluid flow path and the base suction motor is used to provide motive power through the fluid flow path when the surface cleaning unit is switched on and when the portable cleaning unit is mounted on the base.

17. The surface cleaning apparatus of claim **16** wherein the portable cleaning unit comprises or is electrically connectable to a power cord whereby the portable cleaning unit suction motor may be powered by the energy storage member or power supplied by the power cord and the power cord or an alternate power cord provides AC current to the base and the base provides current to the portable cleaning unit when the portable cleaning unit is supported by the base.

18. The surface cleaning apparatus of claim **17** wherein the base provides DC current to the portable cleaning unit when the portable cleaning unit is supported by the base.

19. The surface cleaning apparatus of claim **16** wherein the portable cleaning unit comprises or is electrically connectable to a power cord whereby the portable cleaning unit suction motor may be powered by the energy storage member or power supplied by the power cord and the power cord is electrically connectable to the portable cleaning unit and the base.

20. The surface cleaning apparatus of claim **16** wherein the base comprises a surface cleaning head.

21. A surface cleaning apparatus comprising:

a) a portable cleaning unit removable from a remainder of the surface cleaning unit and comprising at least one cyclonic separation stage, a first energy storage member and a portable cleaning unit suction motor;

b) the remainder of the surface cleaning apparatus comprising or connectable to a power cord; and,

c) a fluid flow path extending from a first dirty fluid inlet to a clean air outlet of the surface cleaning apparatus,

wherein the base further comprises a portion of the fluid flow path and has a base suction motor provided in the portion of the fluid flow path and the base suction motor is used to provide motive power through the fluid flow path when the surface cleaning unit is switched on and when the portable cleaning unit is mounted to the base.

22. The surface cleaning apparatus of claim **21** wherein the power cord is removably electrically connected to the portable cleaning unit.

23. The surface cleaning apparatus of claim **21** wherein the power cord provides AC current to the remainder of the surface cleaning apparatus and the remainder of the surface cleaning apparatus provides current to the portable cleaning unit when the portable cleaning unit is supported by the remainder of the surface cleaning apparatus.

24. The surface cleaning apparatus of claim **23** wherein the remainder of the surface cleaning apparatus provides DC current to the portable cleaning unit when the portable cleaning unit is supported by the remainder of the surface cleaning apparatus.

25. A surface cleaning apparatus comprising:

a) a portable cleaning unit removable from a remainder of the surface cleaning apparatus and comprising at least one cyclonic separation stage, an energy storage member and a portable cleaning unit suction motor; and,

c) a fluid flow path extending from a first dirty fluid inlet to a clean air outlet of the surface cleaning apparatus,

wherein

wherein the remainder of the surface cleaning apparatus further comprises a portion of the fluid flow path and has a suction motor provided in the portion of the fluid flow path and which is used to provide motive power through the fluid flow path when the surface cleaning unit is switched on and when the portable cleaning unit is mounted on the base.

26. The surface cleaning apparatus of claim **25** wherein the portable cleaning comprises or is electrically connectable to a power cord whereby the portable cleaning unit suction motor may be powered by the energy storage member or power supplied by the power cord and the power cord or an alternate power cord provides AC current to the remainder of the surface cleaning apparatus and the remainder of the surface cleaning apparatus provides current to the portable cleaning unit when the portable cleaning unit is supported by the remainder of the surface cleaning apparatus.

27. The surface cleaning apparatus of claim **26** wherein the remainder of the surface cleaning apparatus provides DC current to the portable cleaning unit when the portable cleaning unit is supported by remainder of the surface cleaning apparatus.

* * * * *