US 20150359394A1

(19) United States
(12) Patent Application Publication
PEACE

(10) Pub. No.: US 2015/0359394 A1
(43) Pub. Date: Dec. 17, 2015

(54) **VACUUM CLEANER**

(71) Applicant: **Dyson Technology Limited**, Wiltshire (GB)

(72) Inventor: **Michael James PEACE**, Singapore (SG)

(73) Assignee: **DYSON TECHNOLOGY LIMITED**, Wiltshire (GB)

(21) Appl. No.: **14/835,179**

(22) Filed: **Aug. 25, 2015**

Related U.S. Application Data

(63) Continuation of application No. 13/724,775, filed on Dec. 21, 2012.

(30) **Foreign Application Priority Data**

Dec. 22, 2011 (GB) 1122162.9

Publication Classification

(51) **Int. Cl.**

A47L 5/24	(2006.01)
A47L 9/12	(2006.01)
A47L 9/16	(2006.01)

(52) **U.S. Cl.**

CPC ***A47L 5/24*** (2013.01); ***A47L 9/1633*** (2013.01); ***A47L 9/127*** (2013.01); ***A47L 9/1641*** (2013.01); ***A47L 9/1658*** (2013.01); ***A47L 9/1666*** (2013.01)

(57) **ABSTRACT**

A vacuum cleaner comprising a cyclonic separating apparatus including a dirty air inlet, a main body connected to the cyclonic separating apparatus and a motor and fan unit for generating an airflow through the cyclonic separating apparatus from the dirty air inlet to a clean air outlet, wherein the cyclonic separating apparatus includes at least a first cyclonic cleaning stage and an elongate filter arranged fluidly downstream from the first cyclonic cleaning stage, the elongate filter being housed in a duct at least partially surrounded by the first cleaning stage, and wherein the filter comprises an inlet portion and a filter portion defining a generally tubular filter chamber, the inlet portion including one or more radially facing inlets to permit air to flow into the inlet portion in a radial direction from where the air flows from the inlet portion to the filter chamber in an axial direction.

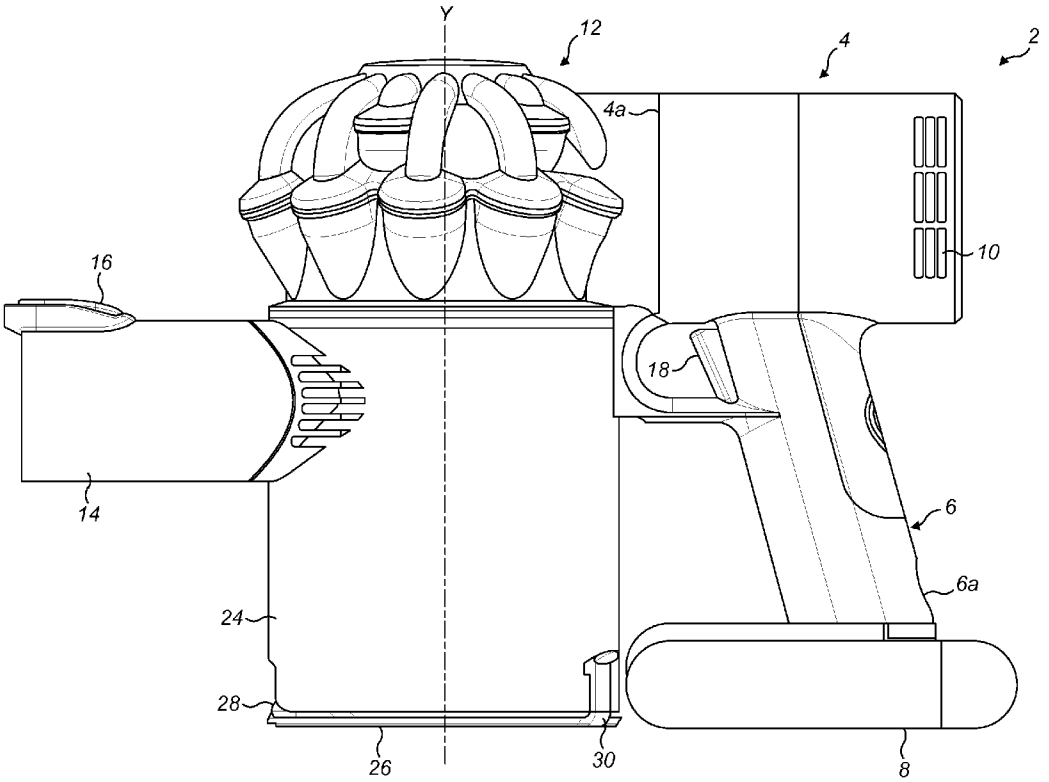

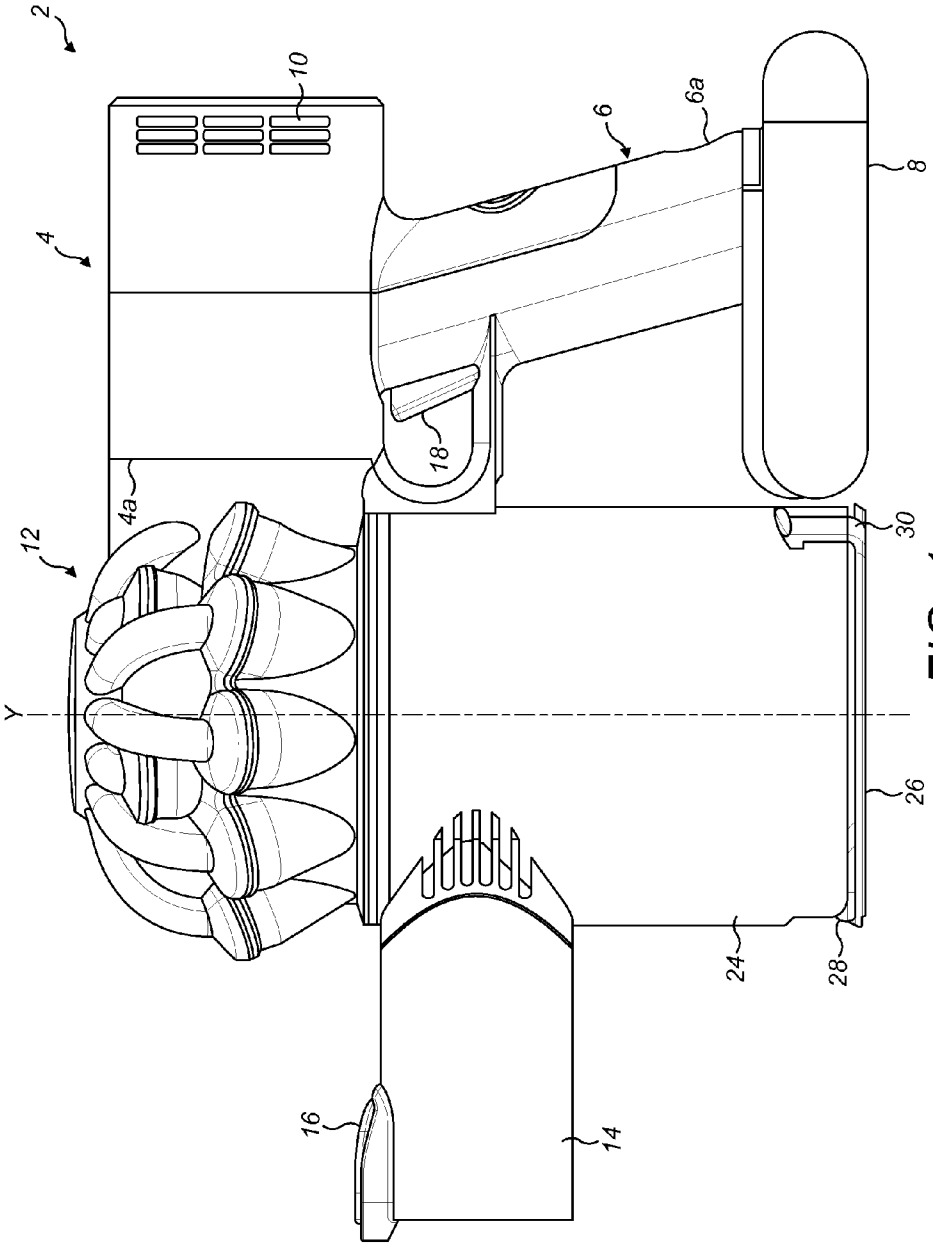

FIG. 1

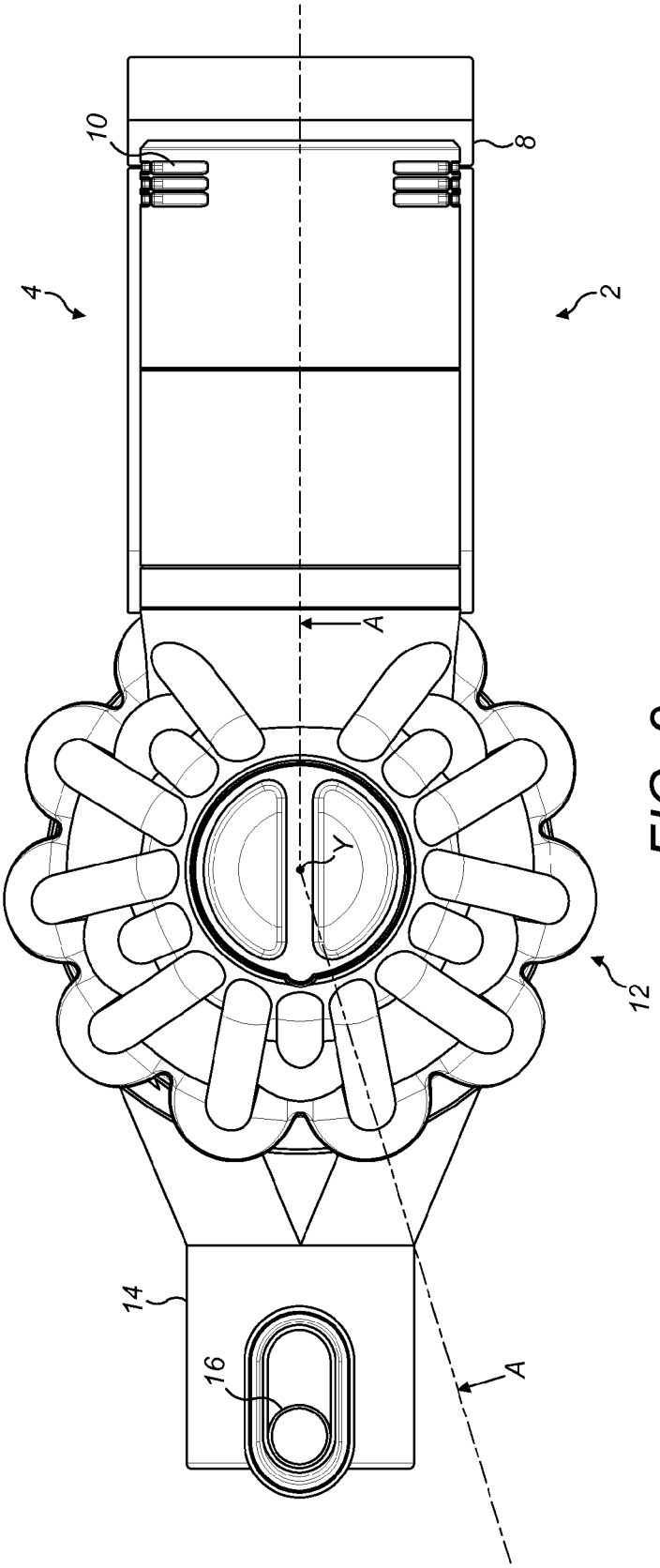

FIG. 2

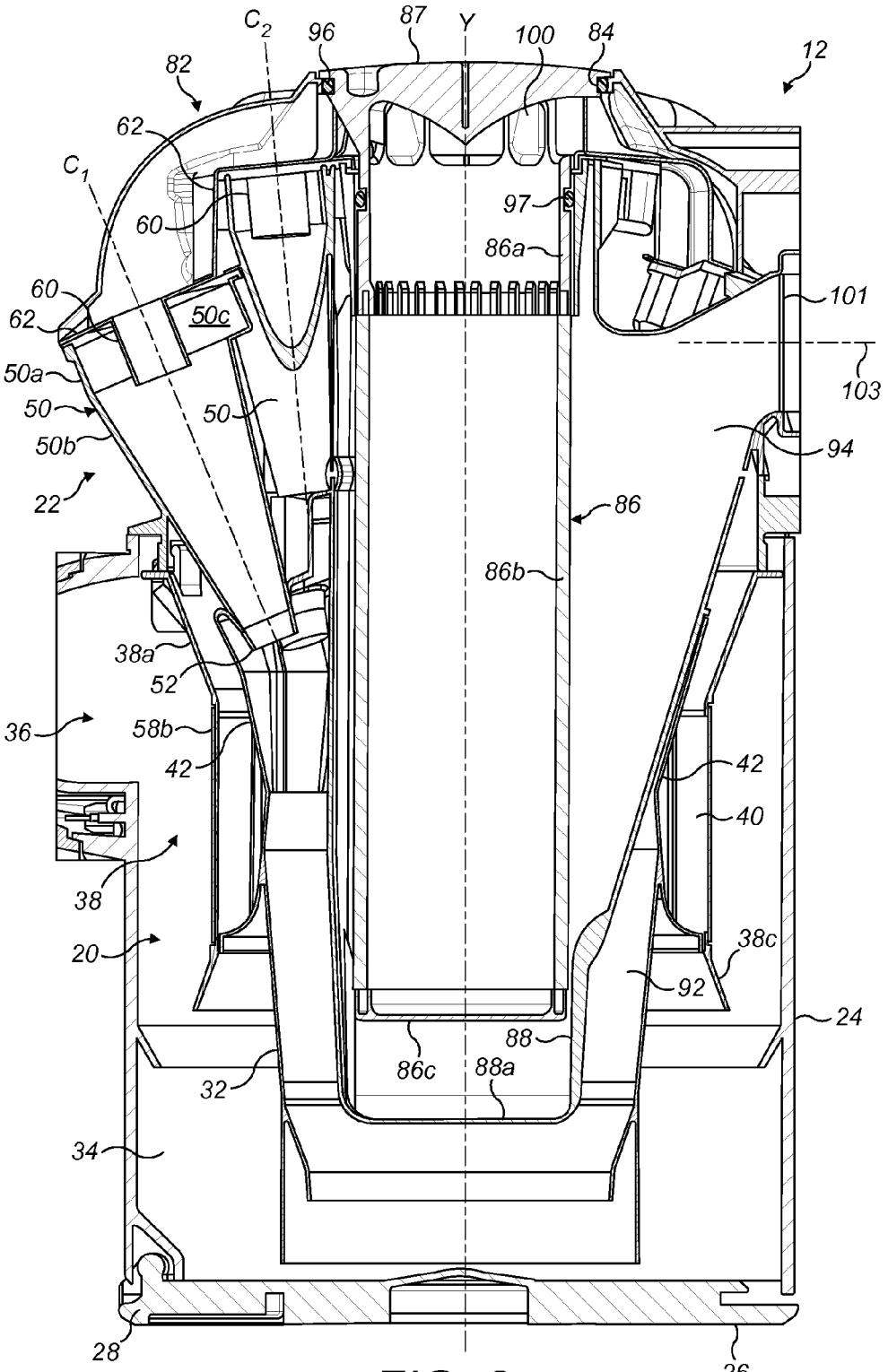
C2
96
87
Y
100
84
12
82
62
C1
60
97
86a
60
62
50c
101
50a
103
50
50
50b
94
22
86
86b
38a
52
36
58b
42
42
40
38
20
38c
92
24
88
86c
88a
32
34
28
26

FIG. 3

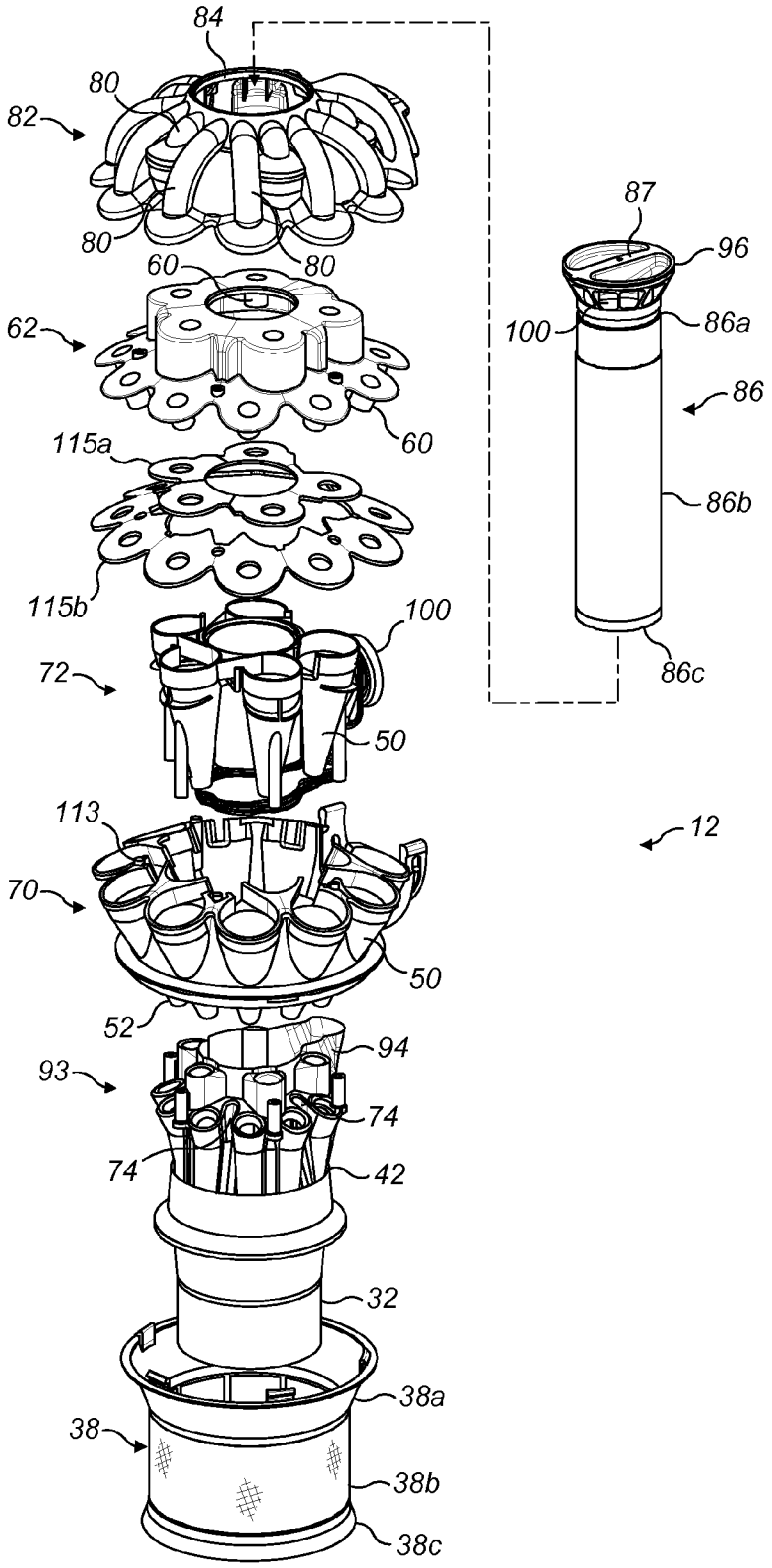
84
80
82
80
80
87
96
60
100
86a
62
86
60
115a
86b
115b
100
86c
72
50
113
12
70
50
52
94
93
74
74
42
32
38a
38
38b
38c

FIG. 4

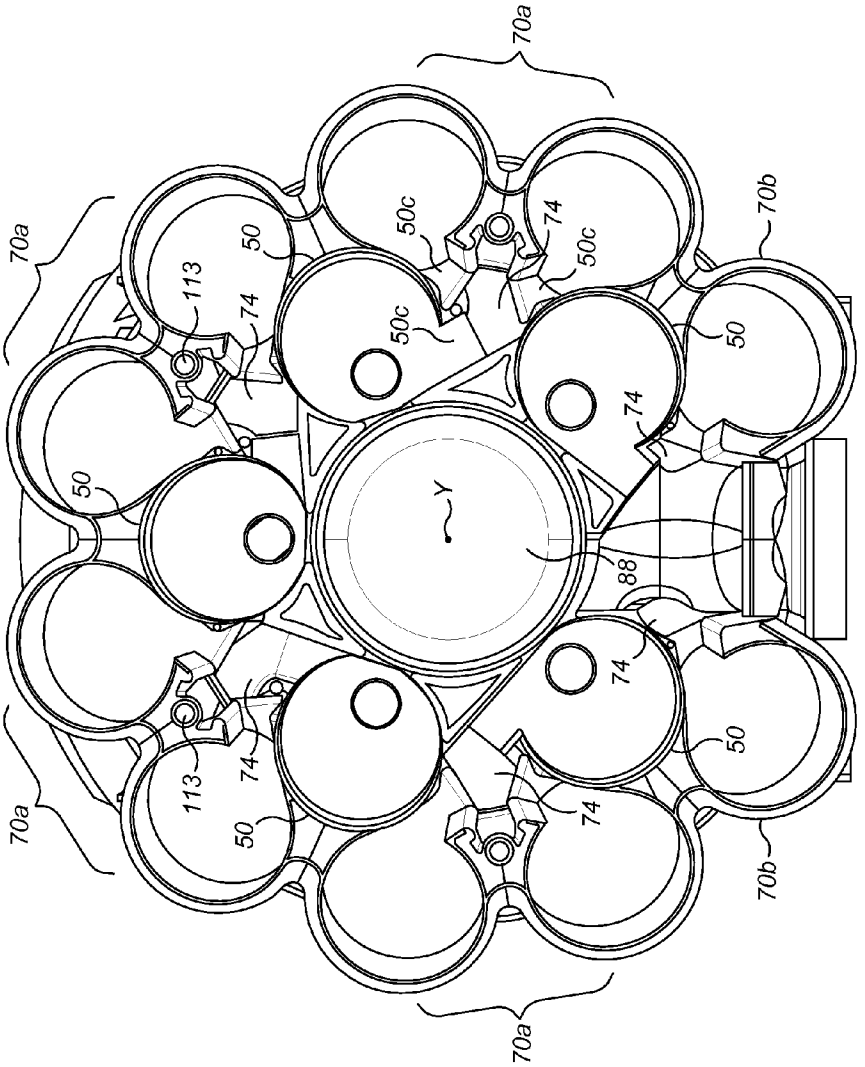
70a
70a
70a
70a
70b
70b
50
50
50
50
50c
50c
50c
113
113
74
74
74
74
74
74
Y
88

FIG. 5

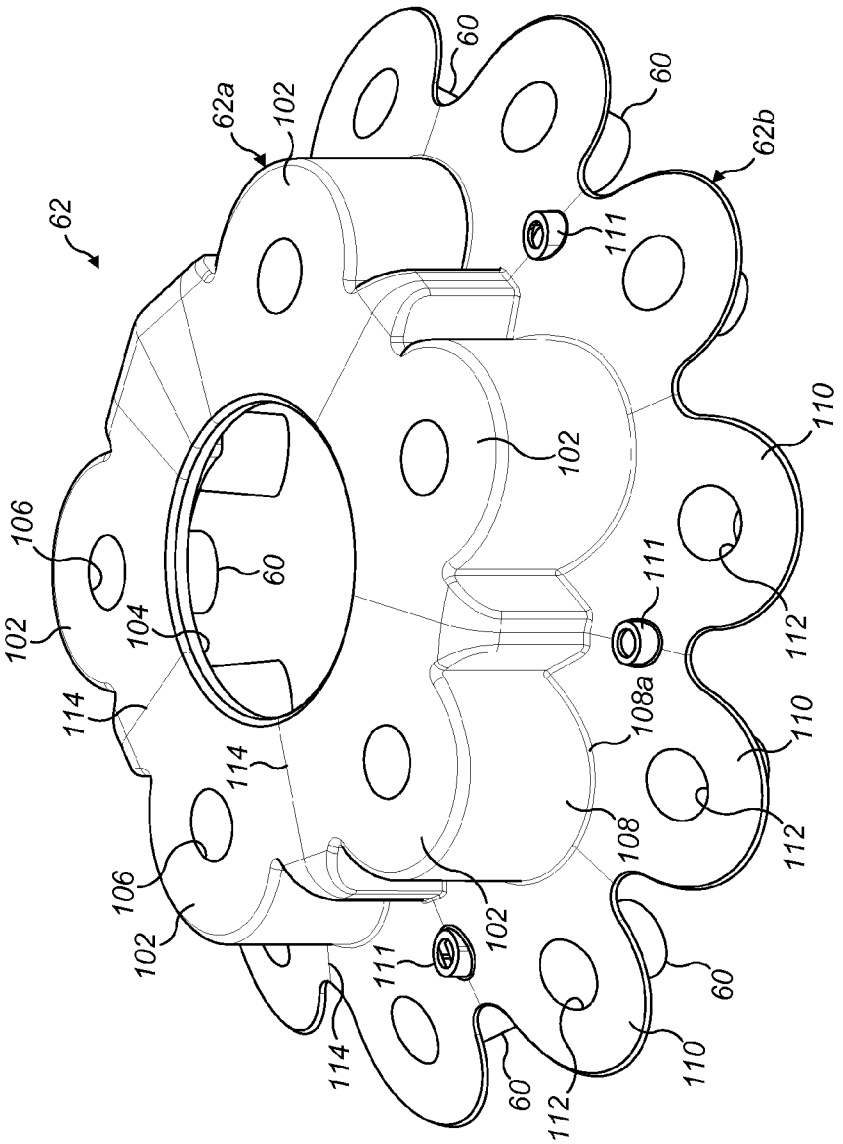

FIG. 6

VACUUM CLEANER

REFERENCE TO RELATED APPLICATIONS

[0001] This application is a continuation of U.S. patent application Ser. No. 13/724,775, filed Dec. 21, 2012, which claims the priority of United Kingdom Application No. 1122162.9, filed Dec. 22, 2011, the entire contents of which are incorporated herein by reference.

FIELD OF THE INVENTION

[0002] The invention relates to a vacuum cleaner, particularly of the handheld type of vacuum cleaner being generally compact and lightweight. The invention also relates to a filter for such a vacuum cleaner.

BACKGROUND OF THE INVENTION

[0003] Handheld vacuum cleaners are popular with users due to their light weight and inherent portability, as well as the lack of power cords, which makes such vacuum cleaners particularly convenient for spot cleaning tasks as well as for cleaning larger areas. The cleaning efficiency of handheld vacuum cleaners is improving and it is known to equip a handheld vacuum cleaner with a cyclonic separating apparatus to separate the dirt and dust from the incoming flow of dirt laden air. One such example is disclosed in EP2040599B, which incorporates a first cyclonic separating stage in the form of a relatively large cylindrical cyclone chamber and a second cyclonic separating stage in the form of a plurality of smaller cyclones fluidly downstream from the first cyclonic separating stage. In such an arrangement, the first cyclonic separating stage works to separate relatively large debris from the airflow, whilst the second cyclonic separating stage filters relatively fine dirt and dust from the airflow by virtue of the increased separation efficiency of the smaller cyclones.

[0004] Whilst two-stage cyclonic separation is efficient at separating dirt and dust from the incoming airflow, it is still prudent to provide a filter downstream of the cyclonic separating apparatus and upstream of the motor in order to protect the motor from the ingress of fine dust which may still be entrained in the airflow. EP2040599B includes a generally planar filter member that is located in a recess adjacent an outlet duct of the cyclonic separating unit. The plane of the filter member lies generally parallel to the longitudinal axis of the cyclonic separating unit. Although this configuration permits a relatively large filter to be used, the overall size of the vacuum cleaner is increased significantly. It is with this drawback in mind that the invention has been devised.

SUMMARY OF THE INVENTION

[0005] The invention provides a vacuum cleaner comprising a cyclonic separating apparatus including a dirty air inlet, a main body connected to the cyclonic separating apparatus and a motor and fan unit for generating an airflow through the cyclonic separating apparatus from the dirty air inlet to a clean air outlet, wherein the cyclonic separating apparatus includes at least a first cyclonic cleaning stage and an elongate filter arranged fluidly downstream from the first cyclonic cleaning stage. The elongate filter is housed in a duct at least partially surrounded by the first cleaning stage, and comprises an inlet portion carrying a filter portion defining a filter chamber. The inlet portion includes one or more radial inlets to permit air to flow into the inlet portion in a radial direction, wherein the air flows from the inlet portion to the filter chamber in an axial direction.

[0006] Preferably, the filter is a sock filter arranged in the duct and so is generally tubular and defines a filter wall having a longitudinal axis generally parallel with a longitudinal axis of the duct/separating apparatus. Commonly, elongate filters such as sock filters are arranged such that air flow enters the interior or lumen of the filter in a direction along the longitudinal axis of the filter, through the open end of the filter. Such a configuration requires a chamber adjacent the open end of the filter to define the entry zone and allow air to flow in an axial direction in to the filter. Conversely, in the invention, the filter defines one or more radial inlets so that airflow is directed into the interior of the filter in a radial direction, that is to say in a direction normal to the longitudinal axis of the filter, thereby avoiding the need for a chamber adjacent the open end of the sock filter as in conventional arrangements. This enables the housing of the filter i.e. the surrounding part of the duct and the separating apparatus to be more compact, which is beneficial in particular for handheld vacuum cleaners for which important characteristics are compactness and low weight.

[0007] Various configuration of radial inlets are possible. For example, the radial inlet may be a single annular opening extending either partly or wholly about the circumference of the inlet portion. Alternatively, the inlet portion may have a plurality of inlets spaced angularly around the periphery of the inlet portion. A plurality of inlet apertures may improve the air flow through the filter and so reduces pressure drop. In the case of a plurality of inlet apertures, each aperture may be aligned with a respective air channel or 'vortex finger' defined by a cyclone outlet manifold of the separating apparatus. Once the airflow has entered the interior of the filter, due to the configuration of the filter the air flows radially outwards through the wall of the filter media portion.

[0008] In order to improve accessibility of the filter, the inlet portion may define a filter cap that is engageable within a complementary shaped aperture defined by the separating apparatus such that the filter cap defines an outer surface of the cyclonic separating apparatus. In this way, the user is able to grip the top of the filter and remove it from the separating apparatus without removing the separating apparatus from the main body of the vacuum cleaner. The filter may therefore extend along the duct from a point above the cyclonic separating apparatus to a point below the first cyclonic cleaning stage and near to the base of the separating apparatus.

[0009] The separating apparatus may include a second cyclonic cleaning stage arranged fluidly downstream of the first cyclonic cleaning stage. In such a configuration, the filter may be configured such that the first cyclonic cleaning stage, the second cyclonic cleaning stage and the filter may be concentric about a common axis.

[0010] The invention is applicable to upright and cylinder type vacuum cleaner, but is particularly suited to handheld vacuum cleaners due to the packaging benefits it provides particularly in terms of size and weight of the separating apparatus.

[0011] From another aspect, the invention provides a filter for a vacuum cleaner comprising a generally tubular inlet portion carrying a generally tubular filter media portion defining an interior chamber having an axis, the inlet portion including one or more radially facing inlets such that a radial

air path is defined for air to flow into the inlet portion and an axial air flow path is defined for air to flow from the inlet portion to the filter chamber.

[0012] In a second aspect, the invention resides in a vacuum cleaner comprising a cyclonic separating apparatus including a dirty air inlet, a main body connected to the cyclonic separating apparatus and a motor and fan unit for generating an airflow through the cyclonic separating apparatus from the dirty air inlet to a clean air outlet. The cyclonic separating apparatus includes at least a first cyclonic cleaning stage and an elongate filter arranged fluidly downstream from the first cyclonic cleaning stage, the elongate filter being housed in a duct at least partially surrounded by the first cleaning stage. The filter comprises an inlet portion and a filter portion, the inlet portion including one or more inlets to permit air to flow into the inlet portion, wherein the inlet portion includes a cover portion that is receivable in the separating apparatus such that the cover portion defines at least a part of an outer surface of the separating apparatus.

[0013] Such an arrangement improves the accessibility of the filter, since a user can simply grip the top of the filter and remove it from the separating apparatus without removing the separating apparatus from the main body of the vacuum cleaner. The filter may therefore extend along the duct from a point above the cyclonic separating apparatus to a point below the first cyclonic cleaning stage and near to the base of the separating apparatus.

[0014] In order to improve the sealing of the filter within the separating apparatus and prevent ambient air from bleeding into the filter duct or unfiltered air from entering the filter duct, the inlet portion may include a first sealing member above the one or more inlets and a second sealing member below the one or more inlets. The first sealing member may be provided about the periphery of the cover portion so as to seal against a complementary shaped aperture in an exhaust manifold of the separating apparatus.

[0015] The vacuum cleaner may also include a second cyclonic cleaning stage located downstream of the first cyclonic cleaning stage, the second cyclonic cleaning stage comprising a plurality of cyclones arranged fluidly in parallel about an axis, and wherein the duct is in communication with an outlet passage which extends between two of the cyclones in the second cyclonic cleaning stage and defines an outlet port which is centred on an axis that is orthogonal with the axis of the second cyclonic cleaning stage. Such an arrangement provides a height reduction benefit for the separating apparatus since the outlet extends rearwardly and between a gap defined between two of the cyclones of the second cyclonic separation stage instead of air being exhausted from the top of the apparatus.

[0016] It should be noted that preferred and/or optional features of the first aspect of the invention can be combined with second aspect of the invention, and vice versa.

BRIEF DESCRIPTION OF THE DRAWINGS

[0017] Embodiments of the present invention will now be described, by way of example only, with reference to the accompanying drawings, in which:

[0018] FIG. **1** is a side view of a handheld vacuum cleaner in accordance with the invention;

[0019] FIG. **2** is a view from above of the vacuum cleaner of FIG. **1**;

[0020] FIG. **3** is a vertical section through the separating apparatus along line A-A in FIG. **2**;

[0021] FIG. **4** is an exploded perspective view of the separating apparatus of the vacuum cleaner in FIGS. **1** and **2**;

[0022] FIG. **5** is a view looking down into the cyclones of the separating apparatus; and

[0023] FIG. **6** is a perspective view of an embodiment of a vortex finder member of the separating apparatus.

DETAILED DESCRIPTION OF THE INVENTION

[0024] Referring firstly to FIGS. **1** and **2**, a handheld vacuum cleaner **2** has a main body **4** which houses a motor and fan unit (not shown) above a generally upright handle or grip portion **6**. The lower end **6***a* of the handle **6** supports a generally slab-like battery pack **8**. A set of exhaust vents **10** are provided on the main body **4** for exhausting air from the handheld vacuum cleaner **2**.

[0025] The main body **4** supports a cyclonic separating apparatus **12** that functions to remove dirt, dust and other debris from a dirt-bearing airflow drawn into the vacuum cleaner by the motor and fan unit. The cyclonic separator **12** is attached to a forward part **4***a* of the main body **4** and an air inlet nozzle **14** extends from a forward portion of the cyclonic separator that is remote from the main body **4**. The air inlet nozzle **14** is configured so that a suitable brush tool can be removably mounted to it and includes a catch **16** for securely holding such a brush tool when the tool is engaged with the inlet. The brush tool is not material to the present invention and so is not shown here.

[0026] The cyclonic separating apparatus **12** is located between the main body **4** and the air inlet nozzle **14** and so also between the handle **6** and the air inlet nozzle **14**. The separating apparatus **12** has a longitudinal axis Y which extends in a generally upright direction so that the handle **6** lies at a shallow angle to the axis Y.

[0027] The handle **6** is oriented in a pistol-grip formation which is a comfortable interface for a user since it reduces stress on a user's wrist during cleaning. The separating apparatus **12** is positioned close to the handle **6** which also reduces the moment applied to the user's wrist when the handheld vacuum cleaner **2** is in use. The handle **6** carries an on/off switch in the form of a trigger **18** for turning the vacuum cleaner motor on and off. In use, the motor and fan unit draws dust laden air into the vacuum cleaner **12** via the air inlet nozzle **14**. Dirt and dust particles entrained within the air flow are separated from the air and retained in the separating apparatus **12**. The cleaned air is ejected from the rear of the separating apparatus **12** and conveyed by a short duct to the motor and fan unit located within the main body **4**, and is subsequently expelled through the air outlets **10**.

[0028] The separating apparatus **12** forming part of the handheld vacuum cleaner **2** is shown in more detail in FIG. **3** which is a cross section through the separating apparatus **12** along the line A-A in FIG. **2**, and FIG. **4** which shows an exploded view of the components of the separating apparatus **12**. In overview, the separating apparatus **12** comprises a first cyclonic separating unit **20** and a second cyclonic separating unit **22** located downstream from the first cyclonic separating unit **20**. In this example, the first cyclonic separating unit **20** extends about part of the second cyclonic separating unit **22**.

[0029] It should be appreciated that the specific overall shape of the separating apparatus can be varied according to the type of vacuum cleaner in which the separating apparatus is to be used. For example, the overall length of the separating apparatus can be increased or decreased with respect to the diameter of the separating apparatus **12**.

[0030] The separating apparatus **12** comprises an outer bin **24** defined by an outer wall being substantially cylindrical in shape and which extends about a longitudinal axis Y of the separating apparatus **12**. The outer bin **24** is preferably transparent so that components of the separating apparatus **12** are visible through it.

[0031] The lower end of the outer bin **24** is closed by a bin base **26** that is pivotably attached to the outer wall **24** by means of a pivot **28** and held in a closed position by a catch **30**. Radially inward of and coaxial with the outer wall **24** is a second cylindrical wall **32** so that an annular chamber **34** is defined between the two walls. The second cylindrical wall **32** engages and is sealed against the base **26** when it is closed. The upper portion of the annular chamber **34** forms a cylindrical cyclone of the first cyclonic separating unit **20** and the lower portion of the annular chamber forms a dust collecting bin of the first cyclonic separating unit **20**.

[0032] A bin inlet **36** is provided at the upper end of the chamber **34** for receiving an air flow from the air inlet nozzle **14**. Although not shown in the Figures, the bin inlet **36** is arranged tangentially to the chamber **34** so as to ensure that incoming dirty air is forced to follow a helical path around the chamber **34**.

[0033] A fluid outlet is provided in the outer bin in the form of a generally cylindrical shroud **38**. More specifically, the shroud has an upper frusto-conical wall **38***a* that tapers towards a lower cylindrical wall **38***b* that depends downwardly into the chamber **34**. A skirt **38***c* depends from the lower part of the cylindrical wall and tapers outwardly in a direction towards the outer wall **24**. The lower wall **38***c* of the shroud is perforated therefore providing the only fluid outlet from the chamber **34**.

[0034] A second annular chamber **40** is located behind the shroud **38** and provides a manifold from which airflow passing through the shroud **38** from the first separating unit **20** is fed to the second cyclonic separating unit **22** through a plurality of conduits or channels **74** defined by a centrally positioned cyclone support structure **42**. The second cyclonic separating unit **22** comprises a plurality of cyclones **50** arranged fluidically in parallel to receive air from the first cyclonic separating unit **20**. In this example, the cyclones **50** are substantially identical in size and shape, each comprising a cylindrical portion **50***a* and a tapering portion **50***b* depending downwardly therefrom (only one cyclone is labelled in FIG. **3** for clarity). The cylindrical portion **50***a* comprises an air inlet **50***c* for receiving fluid from one of the channels **74**. The tapering portion **50***b* of each cyclone is frusto-conical in shape and terminates in a cone opening **52** at its bottom end through which dust is ejected, in use, into the interior of the cyclone support structure **42**. An air outlet in the form of a vortex finder **60** is provided at the upper end of each cyclone **50** to allow air to exit the cyclone. Each vortex finder **60** extends downwardly from a vortex finder member **62** as will be explained.

[0035] As is shown clearly in FIGS. **3** and **4**, the cyclones of the second cyclonic separating unit **22** are grouped into a first set of cyclones **70** and a second set of cyclones **72**. Although not essential to the invention, in this embodiment the first set of cyclones **70** contains more cyclones (ten in total) than the second set of cyclones **72** (five in total).

[0036] Each set of cyclones **70**, **72** is arranged in a ring which is centred on a longitudinal axis Y of the separating unit. The first set of cyclones **70** has a greater number so this forms a relatively large ring of cyclones into which the second set of cyclones is partially received or 'nested'. Note that FIG. **4** depicts the first and second set of cyclones in an exploded view for clarity, whilst FIG. **3** shows the relative positioning of the first and second sets of cyclones when in a nested, but axially spaced, position so that the second set of cyclones can be considered to be 'stacked' on the first set of cyclones.

[0037] Each cyclone **50** of both sets has a longitudinal axis C which is inclined downwardly and towards the longitudinal axis Y of the outer wall **52**. However, to enable a greater degree of nesting of the second set of cyclones into the first set of cyclones, the longitudinal axes C**2** of the second set of cyclones **72** are all inclined at to the longitudinal axis Y of the outer wall at a shallower angle than the longitudinal axes C**1** of the first set of cyclones **70**.

[0038] Referring now to FIG. **5**, and specifically the outer ring defined by the first set of cyclones **70**, it can be seen that the cyclones are arranged into subsets **70***a* which each comprise at least two cyclones. In this example, each subset of cyclones comprises an adjacent pair of cyclones so that the first set of cyclones **70** is divided into five subsets of cyclones **70***a*, one subset of which **70***b* are spaced apart more than the others. Within each subset, the cyclones **70***a* are arranged so that the air inlets **50***c* are located opposite to each other. The cyclone subset **70***b* located that the rear of the separating apparatus **12** are spaced apart to allow the passage of an exhaust duct **94**, as will be explained.

[0039] In this example, each subset of cyclones **70***a*, **70***b* is arranged to receive air from a respective one of the plurality of channels **74** defined by the cyclone support structure **42** which channel airflow from the annular chamber **40** located behind the shroud **38** to the air inlets **50***c* of respective cyclones.

[0040] It will also be noted from FIG. **5** that the cyclones **50** in the second set of cyclones **72** are arranged also in a ring-like pattern and distributed annularly such that each cyclone is positioned between an adjacent pair of cyclones in the first set of cyclones **70**. Furthermore, the respective inlets **50***c* of the second set of cyclones are oriented to face a respective one of the channels **74** that feed air also to the first set of cyclones **70**. Since the air inlets **50***c* of both the first and second sets of cyclones are fed air from a channel **74** that leads from the same annular chamber **40**, the first and second sets of cyclones can be considered to be fluidly in parallel.

[0041] Turning once again to FIGS. **3** and **4**, the vortex finders **60** are defined by a short cylindrical tube that extends downwardly into an upper region of a respective cyclone **50**. Each vortex finder **60** leads into a respective one of a plurality of radially distributed air channels or 'vortex fingers' **80** defined by an exhaust plenum or manifold **82** located at the top of the separating apparatus **12** that serves to direct air from the outlets of the cyclones to a central aperture **84** of the manifold **82**. The aperture **84** constitutes the upper opening of a central duct **88** of the separating apparatus into which a filter member **86** is received. In this embodiment, the filter member **86** is an elongate tubular filter or 'sock filter' that extends down into the central duct **88** along the axis Y, and is delimited by a third cylindrical wall **90** defined by the cyclone supporting structure **42**.

[0042] The third cylindrical wall **90** is located radially inwardly of the second cylindrical wall **32** and is spaced from it so as to define a third annular chamber **92**. An upper region of the cyclone support structure **42** provides a cyclone mounting arrangement **93** to which the cone openings **52** of the cyclones of the second cyclonic separating **22** are mounted so

that they communicate with the interior of the support structure **42**. In this way, in use, dust separated by the cyclones **50** of the second cyclonic separating unit **22** is ejected through the cone openings **52** and collects in the third annular chamber **92**. The chamber **92** therefore forms a dust collecting bin of the second cyclonic separating unit **22** that can be emptied simultaneously with the dust collecting bin of the first cyclonic separating unit **20** when the base **26** is moved to an open position.

[0043] During use of the vacuum cleaner, dust laden air enters the separating apparatus **12** via the bin inlet **36**. Due to the tangential arrangement of the bin inlet **36**, the dust laden air follows a helical path around the outer wall **24**. Larger dirt and dust particles are deposited by cyclonic action in the first annular chamber **34** and collect at the bottom of the chamber **34** in the dust collecting bin. The partially-cleaned dust laden air exits the first annular chamber **34** via the perforated shroud **38** and enters the second annular chamber **40**. The partially-cleaned air then passes into the air channels **74** of the cyclone support structure **42** and is conveyed to the air inlets **50***c* of the first and second sets of cyclones **70**, **72**. Cyclonic separation is set up inside the two sets of cyclones **70**, **72** in order to separate the relatively fine dust particles still entrained within the airflow.

[0044] The dust particles separated from the airflow by the first and second set of cyclones **70**, **72** are deposited in the third annular chamber **92**, also known as a fine dust collector. The further cleaned air then exits the cyclones via the vortex finders **60** and passes into the manifold **82**, from which the air enters the sock filter **86** in the central duct **88** and from there passes into the exhaust duct **94** of the cyclone separator whereby the cleaned air is able to exit the separating apparatus.

[0045] As can be seen in FIGS. **3** and **4**, the filter **86** comprises an upper mounting portion **86***a* and lower filter portion **86***b* that carries out the filtering function and so is formed from a suitable mesh, foam or fibrous filter media. The upper mounting portion **86***a* supports the filter portion **86***b* and also serves to mount the filter **86** within the duct **88** by engaging with the aperture **84** of the exhaust manifold **82**. The mounting portion **86***a* defines a circular outer rim that carries a sealing member **96**, for example in the form of an o-ring, by which means the mounting portion is received removably, but securely, within the aperture **84** of the manifold, simply by way of a press fitting. Since the mounting portion **86***a* is circular, there is no restriction on the angular orientation of the filter, which aids a user in relocating the filter. Although not shown here, it should be appreciated that the filter **86** could also be provided with a locking mechanism if it is desired to more securely hold the filter in position. For example, the filter mounting portion **86***a* could carry a twist-lock fitting formation so that the filter could be twisted in a first direction to lock it into position within the aperture **84**, and twisted in the opposite direction to unlock the filter.

[0046] The mounting portion **86***a* also includes an annular upper section provided with apertures or windows **100** distributed around its circumference, the apertures **100** providing an airflow path for air to enter the interior of the filter member **86**. The sealing member **96** prevents airflow from entering into the region of the filter from outside of the separating apparatus. Beneficially, the apertures **100** are distributed angularly around the periphery of the mounting portion **86***a* and are arranged so as to be in line with a respect one of the radially distributed vortex fingers **80** of the manifold **82** which means that air can flow substantially uninterrupted from the ends of the vortex fingers **80** into a neighbouring one of the inlet apertures **100** of the filter **86**. Air therefore flows into the filter **86** in a radial direction through the apertures **100**, following which the air flows down the interior of the filter **86** and then exits through the cylindrical filter media in a radial direction. A second sealing element **97**, also in the form of an o-ring, is located in an annular groove on the exterior of the mounting portion **86***a* thus extending circumferentially about the mounting portion thereby preventing air from flowing down the side of the filter from the inlet section.

[0047] After flowing out of the filter **86**, the cleaned air then travels up the outlet passage **94** and exhausts the separating apparatus **12** via an exit port **101** located at the rear of the separating unit. It should be noted that the outlet passage **94** is shaped so as have a generally inclined orientation relative to the central axis Y of the duct **88** and rises to a position so that it lies between the two rearmost cyclones on the first set of cyclones **70**. The exit port **101** of the outlet passage **94** is oriented generally horizontally and rearwardly from the separating apparatus **12** and is aligned on an axis **103** that is substantially orthogonal to the longitudinal axis Y of the separating apparatus **12**.

[0048] This configuration of airflow inlet enables the housing of the filter to be more compact since the alternative of allowing air to flow into the filter **86** in an axial direction requires a chamber above the inlet end of the filter to direct air into the top of the filter. The filter of the invention therefore avoids the need for such a chamber which enables the filter housing to be reduced in height.

[0049] Having described the general function of the separating apparatus **12**, the skilled reader will appreciate it includes two distinct stages of cyclonic separation. First, the first cyclonic separating unit **12** comprises a single cylindrical cyclone **20** having a relatively large diameter to cause comparatively large particles of dirt and debris to be separated from the air by virtue of the relatively small centrifugal forces. A large proportion of the larger debris will reliably be deposited in the dust collecting bin **34**.

[0050] Second, the second cyclonic separating unit **22** comprises fifteen cyclones **50**, each of which has a significantly smaller diameter than the cylindrical first cyclone unit **20** and so is capable of separating finer dirt and dust particles due to the increased speed of the airflow therein. The separation efficiency of the cyclones is therefore considerably higher than that of the cylindrical first cyclone unit **20**.

[0051] Reference will now be made also to FIG. **6** which shows the vortex finder member **62** in more detail. The vortex finder member **62** is generally plate-like in form and performs two main functions. Its primary function is to provide a means by which air is channelled out of the cyclones **50** on an upwardly spinning column of air and thereafter to direct the airflow exiting the cyclones **50** to an appropriate zone on the adjacent exhaust manifold **82**. Secondly, it serves to seal to upper end of the cyclones **50** so that air cannot bleed away from the primary airflow inside the cyclones.

[0052] In more detail, the vortex finder plate **62** of the invention comprises upper and lower vortex finder portions **62***a*, **62***b*, each of the portions providing vortex finders **60** for respective cyclones in the first and second sets of cyclones **70**, **72**. The first, upper, vortex finder portion **62***a* includes five planar segments **102** configured into a ring so as to define a central aperture **104** matching the central aperture **84** of the exhaust manifold **82**. Each of the upper segments **102** defines

a central opening **106** (only two of which are labelled for clarity) from which the cylindrical vortex finders **60** depend. As can be seen clearly in FIG. **3**, the vortex finders **60** associated with the second set of cyclones **72** sit within the outlet end of the cyclones and are coaxial to the cyclone axis C**2**. Accordingly, the segments **102** in the first ring are dished downwards slightly out of a horizontal plane. The outer edge of the segments **102** define a downwardly depending wall or skirt **108**, the lower end **108***a* of which defines the inner edge of the lower vortex finder portion **62***b*.

[0053] The lower vortex finder portion **62***b* comprises ten segments **110** in total (only three of which are labelled for clarity), corresponding to the number of cyclones in the first set of cyclones **70**. Once again, each segment **110** includes a central opening **112** from which depends a respective one of the vortex finders **60**. With reference to FIG. **3**, it should be noted that the vortex finders **60** of the lower vortex finder portion **62***b* sit coaxially within the upper end of each respective cyclone in the first set **70** so as to be centred on the cyclone axis C**1**. Therefore, each segment **110** is angled downwardly with respect to the first ring so that the plane of the segment **110** is perpendicular to the axis C**1**.

[0054] It will be appreciated from the above that each of the vortex finders for the stacked sets of cyclones is provided by a common vortex finder plate. Such an arrangement improves the sealing of the cyclone outlets since a single vortex finder plate can be assembled on both upper and lower sets of cyclones which reduces the possibility of air leaks which may occur if the vortex finders for each set of cyclones were provided by an individual vortex finder plate.

[0055] In order to secure the vortex finder plate **62** to the second cyclonic separating unit **22**, lugs **111** are provided on the lower vortex finder portion **62***b*. Screw fasteners may then pass through the lugs **111** to engage with corresponding bosses **113** (shown in FIG. **5**) provided on the lower set of cyclones **72**. On assembly, suitable rubber gasket rings **115***a*, **115***b* are positioned so as to be sandwiched between the upper face of the second cyclone separating unit **22** and the underside of the vortex finder plate **62**. Although various materials may be used for the gasket rings, for example natural fibre-based material, a flexible polymeric material is preferred. It will be noted that since the vortex finder plate **62** fastens directly to the lower set of cyclones **72**, that the gaskets **115***a*, *b* and the second set of cyclones **70** are clamped between them. As a result the gaskets and the vortex finder plate are secured without needing additional fasteners, which reduces the part count of the separating apparatus as a whole as well as reducing weight and manufacturing complexity.

[0056] In this embodiment, each vortex finder segment in both the lower and upper portions **62***a*, **62***b* is demarcated from its neighbouring segment by a line of weakness to allow a degree of relative movement between them. The lines of weakness allow the segments **102**, **110** an element of 'play' so that they may find a natural position on top of the cyclones when separator is assembled. However, it should be noted that these lines of weakness are not essential to the invention and the vortex finder member could instead be made rigid with limited or no flexibility between the segments. A suitable material for the vortex finder member is any suitably rigid plastics, for example acrylonitrile butadiene styrene (ABS).

[0057] The skilled will appreciated that various modifications may be made to the inventive concept without departing from the scope of the invention, as defined by the claims.

[0058] For example, although the vortex finder plate has been described here as being defined by a plurality of interconnected, and integral, segments, optionally demarcated by lines of weakness, the vortex finder plate could also be formed from continuous ring elements with no differentiating features.

[0059] With reference to the filter member **86**, it should be noted that in the specific embodiment described above the filter member **86** is provided with a plurality of apertures **100** distributed around its circumference to provide a radial airflow path for air to enter the interior of the filter, the apertures **100** being aligned with a respective one of the radially distributed vortex fingers **80** of the manifold **82**. However, it should be appreciated that the alignment is not essential, and the number of apertures in the filter **86** need not coincide with the number of the vortex fingers **80**. One possibility, for example, is that a single aperture could extend circumferentially about the inlet portion of the filter. It should be noted for example that airflow benefits may be attained by reducing the number of apertures, whilst increasing the aperture area. The important feature is that air is able to flow radially inward into the filter member to access the interior of the filter and then to flow axially inside the tubular structure defined by the filter media before passing through the wall of the filter media. This avoids the need for a chamber to be provided above the filter.

[0060] Furthermore, although the filter portion **86***b* has been described as cylindrical, it may also be conical or frusto-conical such that the filter portion **86***b* tapers towards its lower end **86***c* which has a smaller diameter compared to its upper, or inlet, end. A tapered filter portion **86***b* may be beneficial in resisting deformation due to the comparatively reduced pressure region in the outlet duct **94** which may tend to impart a 'curved' shape to the filer portion **86***b* in use.

1. (canceled)

2. A hand carriable surface cleaning apparatus having a front end, a rear end and comprising: (a) a dirty fluid inlet; (b) a cyclone bin assembly comprising a cyclone chamber downstream of the dirty fluid inlet, the cyclone chamber comprising a lower end, an upper end, a cyclone axis, an air inlet and an air outlet at the upper end; (c) a pre-motor filter comprising an upstream side and a downstream side, the pre-motor filter is positioned at least partially above the upper end and downstream of the cyclone chamber; (d) a suction motor positioned downstream of the pre-motor filter and rearward of the cyclone bin assembly; (e) an air flow path extending from the pre-motor filter to the suction motor; and, (f) a clean air outlet downstream of the suction motor.

3. The hand carriable surface cleaning apparatus of claim **2** wherein the suction motor has a suction motor inlet that is positioned between lower and upper ends of the cyclone bin assembly.

4. The hand carriable surface cleaning apparatus of claim **3** wherein the suction motor has a motor axis that is generally perpendicular to the cyclone axis.

5. The hand carriable surface cleaning apparatus of claim **2** wherein the suction motor has a motor axis that is generally perpendicular to the cyclone axis.

6. The hand carriable surface cleaning apparatus of claim **2** wherein the air inlet is provided at the upper end and a dirt outlet is provided at the lower end and a dirt collection chamber is positioned below the cyclone chamber.

7. The hand carriable surface cleaning apparatus of claim **2** wherein the air flow path has a portion that is exterior to and extends part way along an exterior wall of the cyclone chamber to a suction motor inlet.

8. The hand carriable surface cleaning apparatus of claim **2** further comprising a dirt collection chamber positioned exterior to the cyclone chamber, the air flow path has a portion that extends part way along an exterior wall of the dirt collection chamber to a suction motor inlet.

9. The hand carriable surface cleaning apparatus of claim **2** wherein the upstream side is spaced further from the cyclone chamber than the downstream side.

10. The hand carriable surface cleaning apparatus of claim **9** further comprising a conduit that is in flow communication with the air outlet of the cyclone chamber and extends through the pre-motor filter.

11. The hand carriable surface cleaning apparatus of claim **10** further comprising a downstream header on the downstream side of the pre-motor filter and the air flow path extends downstream from the downstream header.

12. The hand carriable surface cleaning apparatus of claim **9** further comprising a upstream header on the upstream side of the pre-motor filter and the upstream header is openable.

13. The hand carriable surface cleaning apparatus of claim **2** further comprising a handle, a suction motor housing and a pre-motor filter housing positioned at least partially above the cyclone chamber, the handle extending between the suction motor housing and the pre-motor filter housing.

14. The hand carriable surface cleaning apparatus of claim **13** wherein the pre-motor filter housing is openable.

15. The hand carriable surface cleaning apparatus of claim **13** wherein the suction motor has a motor axis that is generally perpendicular to the cyclone axis.

16. The hand carriable surface cleaning apparatus of claim **13** wherein the handle has a suction motor housing end that is spaced rearward of the cyclone bin assembly and below the pre-motor filter housing and a pre-motor filter end that is spaced above and forward of the suction motor housing end of the handle.

17. The hand carriable surface cleaning apparatus of claim **13** further comprising an opening having a perimeter and the perimeter comprises portions of the handle, the pre-motor filter housing and the suction motor housing.

18. The hand carriable surface cleaning apparatus of claim **2** further comprising a handle, wherein a portion of the handle is placed rearward of a centre of gravity of the hand carriable surface cleaning apparatus.

19. A hand carriable surface cleaning apparatus having a front end, a rear end and comprising: (a) a dirty fluid inlet; (b) a cyclone bin assembly comprising a cyclone chamber downstream of the dirty fluid inlet, the cyclone chamber comprising a lower end, an upper end, a cyclone axis, an air inlet and an air outlet at the upper end; (c) a pre-motor filter comprising an upstream side and a downstream side, the pre-motor filter is positioned in a pre-motor filter housing having an openable cover, the cyclone axis extends through the pre-motor filter housing; (d) a suction motor positioned downstream of the pre-motor filter and rearward of the cyclone bin assembly; (e) an air flow path extending from the pre-motor filter to the suction motor; and, (f) a clean air outlet downstream of the suction motor.

20. The hand carriable surface cleaning apparatus of claim **19** wherein the suction motor has a suction motor inlet that is positioned between lower and upper ends of the cyclone bin assembly.

21. The hand carriable surface cleaning apparatus of claim **20** wherein the suction motor has a motor axis that is generally perpendicular to the cyclone axis.

22. The hand carriable surface cleaning apparatus of claim **19** wherein the suction motor has a motor axis that is generally perpendicular to the cyclone axis.

23. The hand carriable surface cleaning apparatus of claim **19** wherein the air inlet is provided at the upper end and a dirt outlet is provided at the lower end and a dirt collection chamber is positioned below the cyclone chamber.

24. The hand carriable surface cleaning apparatus of claim **19** wherein the air flow path has a portion that is exterior to and extends part way along an exterior wall of the cyclone chamber to a suction motor inlet.

25. The hand carriable surface cleaning apparatus of claim **19** further comprising a dirt collection chamber positioned exterior to the cyclone chamber, the air flow path has a portion that extends part way along an exterior wall of the dirt collection chamber to a suction motor inlet.

26. The hand carriable surface cleaning apparatus of claim **19** wherein the upstream side is spaced further from the cyclone chamber than the downstream side.

27. The hand carriable surface cleaning apparatus of claim **26** further comprising a conduit that is in flow communication with the air outlet of the cyclone chamber and extends through the pre-motor filter.

28. The hand carriable surface cleaning apparatus of claim **27** further comprising a downstream header on the downstream side of the pre-motor filter and the air flow path extends downstream from the downstream header.

29. The hand carriable surface cleaning apparatus of claim **26** further comprising an upstream header on the upstream side of the pre-motor filter and the upstream header is openable.

30. The hand carriable surface cleaning apparatus of claim **19** further comprising a handle and a suction motor housing, the pre-motor filter housing is positioned above the cyclone chamber, the handle extending between the suction motor housing and the pre-motor filter housing.

31. The hand carriable surface cleaning apparatus of claim **30** wherein the pre-motor filter housing is openable without moving the handle.

32. The hand carriable surface cleaning apparatus of claim **30** wherein the suction motor has a motor axis that is generally perpendicular to the cyclone axis.

33. The hand carriable surface cleaning apparatus of claim **19** further comprising a handle, wherein the handle has a suction motor housing end that is spaced rearward of the cyclone bin assembly and below the pre-motor filter housing and a pre-motor filter end that is spaced above and forward of the suction motor housing end of the handle.

34. The hand carriable surface cleaning apparatus of claim **30** further comprising an opening having a perimeter and the perimeter comprises portions of the handle, the pre-motor filter housing and the suction motor housing.

35. The hand carriable surface cleaning apparatus of claim **19** further comprising a handle, wherein a portion of the handle is placed rearward of a centre of gravity of the hand carriable surface cleaning apparatus.

36. A hand carriable surface cleaning apparatus having a front end, a rear end and comprising: (a) a dirty fluid inlet; (b) a cyclone bin assembly comprising a cyclone chamber downstream of the dirty fluid inlet, the cyclone chamber comprising a lower end, an upper end, a cyclone axis, an air inlet and an air outlet at the upper end; (c) a pre-motor filter comprising an upstream side and a downstream side, each of the upstream and downstream sides having a front end positioned proximate the front end and extending rearwardly, the pre-motor filter is positioned above the upper end and downstream of the cyclone chamber, the cyclone chamber air outlet is positioned at a location spaced from the front end of the pre-motor filter; (d) a suction motor positioned downstream of the pre-motor filter and rearward of the cyclone bin assembly; (e) an air flow path extending from the pre-motor filter to the suction motor; and, (f) a clean air outlet downstream of the suction motor.

37. A hand carriable surface cleaning apparatus comprising: (a) a dirty fluid inlet; (b) a cyclone bin assembly comprising a cyclone chamber downstream of the dirty fluid inlet, the cyclone chamber comprising a lower end, an upper end, a cyclone axis, an air inlet and an air outlet at the upper end; (c) a pre-motor filter comprising an upstream side and a downstream side, the pre-motor filter is positioned above the upper end and downstream of the cyclone chamber, the pre-motor filter overlies at least a portion of the upper end of the cyclone chamber; (d) a suction motor positioned downstream of the pre-motor filter and rearward of the cyclone bin assembly; (e) an air flow path extending from the pre-motor filter to the suction motor; and, (f) a clean air outlet downstream of the suction motor.

38. A hand carriable surface cleaning apparatus comprising: (a) a dirty fluid inlet; (b) a cyclone bin assembly comprising a cyclone chamber downstream of the dirty fluid inlet, the cyclone chamber comprising a lower end, an upper end, a cyclone axis, an air inlet and an air outlet at the upper end; (c) a pre-motor filter comprising an upstream side and a downstream side, the pre-motor filter is positioned above the upper end and downstream of the cyclone chamber; (d) an upstream header on the upstream side of the pre-motor filter and the upstream header is openable; (e) a suction motor positioned downstream of the pre-motor filter and rearward of the cyclone bin assembly; (f) an air flow path extending from the pre-motor filter to the suction motor; and, (g) a clean air outlet downstream of the suction motor.

39. The hand carriable surface cleaning apparatus of claim **38** wherein the upstream side is spaced further from the cyclone chamber than the downstream side.

40. A hand carriable surface cleaning apparatus having a front end, a rear end and comprising: (a) a dirty fluid inlet; (b) a cyclone bin assembly comprising a cyclone chamber downstream of the dirty fluid inlet, the cyclone chamber comprising a lower end, an upper end, a cyclone axis, an air inlet and an air outlet at the upper end; (c) a pre-motor filter comprising an upstream side and a downstream side, the pre-motor filter is positioned in a pre-motor filter housing that is openable, the cyclone axis extends through the pre-motor filter housing; (d) a suction motor positioned downstream of the pre-motor filter and rearward of the cyclone bin assembly; (e) an air flow path extending from the pre-motor filter to the suction motor; and, (f) a clean air outlet downstream of the suction motor.

41. The hand carriable surface cleaning apparatus of claim **40** wherein the suction motor has a suction motor inlet that is positioned between lower and upper ends of the cyclone bin assembly.

42. The hand carriable surface cleaning apparatus of claim **41** wherein the suction motor has a motor axis that is generally perpendicular to the cyclone axis.

43. The hand carriable surface cleaning apparatus of claim **40** wherein the suction motor has a motor axis that is generally perpendicular to the cyclone axis.

44. The hand carriable surface cleaning apparatus of claim **40** wherein the air inlet is provided at the upper end and a dirt outlet is provided at the lower end and a dirt collection chamber is positioned below the cyclone chamber.

45. The hand carriable surface cleaning apparatus of claim **40** wherein the air flow path has a portion that is exterior to and extends part way along an exterior wall of the cyclone chamber to a suction motor inlet.

46. The hand carriable surface cleaning apparatus of claim **40** further comprising a dirt collection chamber positioned exterior to the cyclone chamber, the air flow path has a portion that extends part way along an exterior wall of the dirt collection chamber to a suction motor inlet.

47. The hand carriable surface cleaning apparatus of claim **40** wherein the upstream side is spaced further from the cyclone chamber than the downstream side.

48. The hand carriable surface cleaning apparatus of claim **47** further comprising a conduit that is in flow communication with the air outlet of the cyclone chamber and extends through the pre-motor filter.

49. The hand carriable surface cleaning apparatus of claim **48** further comprising a downstream header on the downstream side of the pre-motor filter and the air flow path extends downstream from the downstream header.

50. The hand carriable surface cleaning apparatus of claim **47** further comprising an upstream header on the upstream side of the pre-motor filter and the upstream header is openable.

51. The hand carriable surface cleaning apparatus of claim **40** further comprising a handle and a suction motor housing, at least a portion of the pre-motor filter housing is positioned above the cyclone chamber, the handle extending between the suction motor housing and the pre-motor filter housing.

52. The hand carriable surface cleaning apparatus of claim **51** wherein the pre-motor filter housing is openable without moving the handle.

53. The hand carriable surface cleaning apparatus of claim **51** wherein the suction motor has a motor axis that is generally perpendicular to the cyclone axis.

54. The hand carriable surface cleaning apparatus of claim **40** further comprising a handle, wherein the handle has a suction motor housing end that is spaced rearward of the cyclone bin assembly and below at least a portion of the pre-motor filter housing and a pre-motor filter end that is spaced above and forward of the suction motor housing end of the handle.

55. The hand carriable surface cleaning apparatus of claim **51** further comprising an opening having a perimeter and the perimeter comprises portions of the handle, the pre-motor filter housing and the suction motor housing.

56. The hand carriable surface cleaning apparatus of claim **40** further comprising a handle, wherein a portion of the handle is placed rearward of a centre of gravity of the hand carriable surface cleaning apparatus.

57. A hand carriable surface cleaning apparatus having a front end, a rear end and comprising: (a) a dirty fluid inlet; (b) a cyclone bin assembly comprising a cyclone chamber downstream of the dirty fluid inlet, the cyclone chamber compris-

ing a lower end, an upper end, a cyclone axis, an air inlet and an air outlet at the upper end; (c) a pre-motor filter comprising an upstream side and a downstream side, each of the upstream and downstream sides having a front end positioned proximate the front end and extending rearwardly, at least a portion of the pre-motor filter is positioned above the upper end and downstream of the cyclone chamber, the cyclone chamber air outlet is positioned at a location spaced from the front end of the pre-motor filter; (d) a suction motor positioned downstream of the pre-motor filter and rearward of the cyclone bin assembly; (e) an air flow path extending from the pre-motor filter to the suction motor; and, (f) a clean air outlet downstream of the suction motor.

58. A hand carriable surface cleaning apparatus comprising: (a) a dirty fluid inlet; (b) a cyclone bin assembly comprising a cyclone chamber downstream of the dirty fluid inlet, the cyclone chamber comprising a lower end, an upper end, a cyclone axis, an air inlet and an air outlet at the upper end; (c) a pre-motor filter comprising an upstream side and a downstream side, at least a portion of the pre-motor filter is positioned above the upper end and downstream of the cyclone chamber, at least a portion of the pre-motor filter overlies at least a portion of the upper end of the cyclone chamber; (d) a suction motor positioned downstream of the pre-motor filter and rearward of the cyclone bin assembly; (e) an air flow path extending from the pre-motor filter to the suction motor; and, (f) a clean air outlet downstream of the suction motor.

59. A hand carriable surface cleaning apparatus comprising: (a) a dirty fluid inlet; (b) a cyclone bin assembly comprising a cyclone chamber downstream of the dirty fluid inlet, the cyclone chamber comprising a lower end, an upper end, a cyclone axis, an air inlet and an air outlet at the upper end; (c) a pre-motor filter comprising an upstream side and a downstream side, at least a portion of the pre-motor filter is positioned above the upper end and downstream of the cyclone chamber; (d) an upstream header on the upstream side of the pre-motor filter and the upstream header is openable; (e) a suction motor positioned downstream of the pre-motor filter and rearward of the cyclone bin assembly; (f) an air flow path extending from the pre-motor filter to the suction motor; and, (g) a clean air outlet downstream of the suction motor.

60. The hand carriable surface cleaning apparatus of claim **59** wherein the upstream side is spaced further from the cyclone chamber than the downstream side.

61. The hand carriable surface cleaning apparatus of claim **27** further comprising a downstream chamber on the downstream side of the pre-motor filter and the air flow path extends downstream from the downstream chamber.

62. The hand carriable surface cleaning apparatus of claim **48** further comprising a downstream chamber on the downstream side of the pre-motor filter and the air flow path extends downstream from the downstream chamber.

63. The hand carriable surface cleaning apparatus of claim **27** further comprising a downstream duct on the downstream side of the pre-motor filter and the air flow path extends downstream from the downstream duct.

64. The hand carriable surface cleaning apparatus of claim **48** further comprising a downstream duct on the downstream side of the pre-motor filter and the air flow path extends downstream from the downstream duct.

65. The hand carriable surface cleaning apparatus of claim **26** further comprising an upstream chamber on the upstream side of the pre-motor filter and the upstream chamber is openable.

66. The hand carriable surface cleaning apparatus of claim **47** further comprising an upstream chamber on the upstream side of the pre-motor filter and the upstream chamber is openable.

67. The hand carriable surface cleaning apparatus of claim **26** further comprising an upstream manifold on the upstream side of the pre-motor filter and the upstream manifold is openable.

68. The hand carriable surface cleaning apparatus of claim **47** further comprising an upstream manifold on the upstream side of the pre-motor filter and the upstream manifold is openable.

69. A hand carriable surface cleaning apparatus comprising: (a) a dirty fluid inlet; (b) a cyclone bin assembly comprising a cyclone chamber downstream of the dirty fluid inlet, the cyclone chamber comprising a lower end, an upper end, a cyclone axis, an air inlet and an air outlet at the upper end; (c) a pre-motor filter comprising an upstream side and a downstream side, at least a portion of the pre-motor filter is positioned above the upper end and downstream of the cyclone chamber; (d) an upstream chamber on the upstream side of the pre-motor filter and the upstream chamber is openable; (e) a suction motor positioned downstream of the pre-motor filter and rearward of the cyclone bin assembly; (f) an air flow path extending from the pre-motor filter to the suction motor; and, (g) a clean air outlet downstream of the suction motor.

70. The hand carriable surface cleaning apparatus of claim **69** wherein the upstream side is spaced further from the cyclone chamber than the downstream side.

71. A hand carriable surface cleaning apparatus comprising: (a) a dirty fluid inlet; (b) a cyclone bin assembly comprising a cyclone chamber downstream of the dirty fluid inlet, the cyclone chamber comprising a lower end, an upper end, a cyclone axis, an air inlet and an air outlet at the upper end; (c) a pre-motor filter comprising an upstream side and a downstream side, at least a portion of the pre-motor filter is positioned above the upper end and downstream of the cyclone chamber; (d) an upstream manifold on the upstream side of the pre-motor filter and the upstream manifold is openable; (e) a suction motor positioned downstream of the pre-motor filter and rearward of the cyclone bin assembly; (f) an air flow path extending from the pre-motor filter to the suction motor; and, (g) a clean air outlet downstream of the suction motor.

72. The hand carriable surface cleaning apparatus of claim **71** wherein the upstream side is spaced further from the cyclone chamber than the downstream side.

* * * * *