US 20010012294A1

(19) United States

(12) Patent Application Publication (10) Pub. No.: US 2001/0012294 A1

KADAMBI et al. (43) Pub. Date: Aug. 9, 2001

(54) NETWORK SWITCHING ARCHITECTURE WITH FAST FILTERING PROCESSOR

(76) Inventors: SHIRI KADAMBI, LOS ALTOS, CA (US); SHEKHAR AMBE, SAN JOSE, CA (US)

Correspondence Address:
ARENT FOX KINTNER PLOTKIN & KAHN PLLC
1050 CONNECTICUT AVENUE, NW, SUITE 600
WASHINGTON, DC 20036-5339 (US)

(*) Notice: This is a publication of a continued prosecution application (CPA) filed under 37 CFR 1.53(d).

(21) Appl. No.: 09/343,411

(22) Filed: Jun. 30, 1999

Related U.S. Application Data

(63) Non-provisional of provisional application No. 60/092,220, filed on Jul. 8, 1998. Non-provisional of provisional application No. 60/095,972, filed on Aug. 10, 1998.

Publication Classification

(51) Int. Cl.[7] H04L 12/28; H04L 12/56

(52) U.S. Cl. 370/391; 370/392; 370/416

(57) ABSTRACT

A network switch for network communications includes a first data port interface supporting a plurality of data ports transmitting and receiving data at a first data rate. A second data port interface supports a plurality of data ports transmitting and receiving data at a second data rate. A CPU interface is configured to communicate with a CPU, and an internal memory communicates with the first data port interface and the second data port interface. A memory management unit is provided, including an external memory interface, for communicating data from at least one of the first data port interface and the second data port interface and an external memory. A communication channel is provided, for communicating data and messaging information between the first data port interface, the second data port interface, the internal memory, and the memory management unit. One data port interface of the first data port interface and the second data port interface includes a fast filtering process, with the fast filtering processor filtering packets coming into the one data port interface. Selective filter action is taken based upon a filtering result.

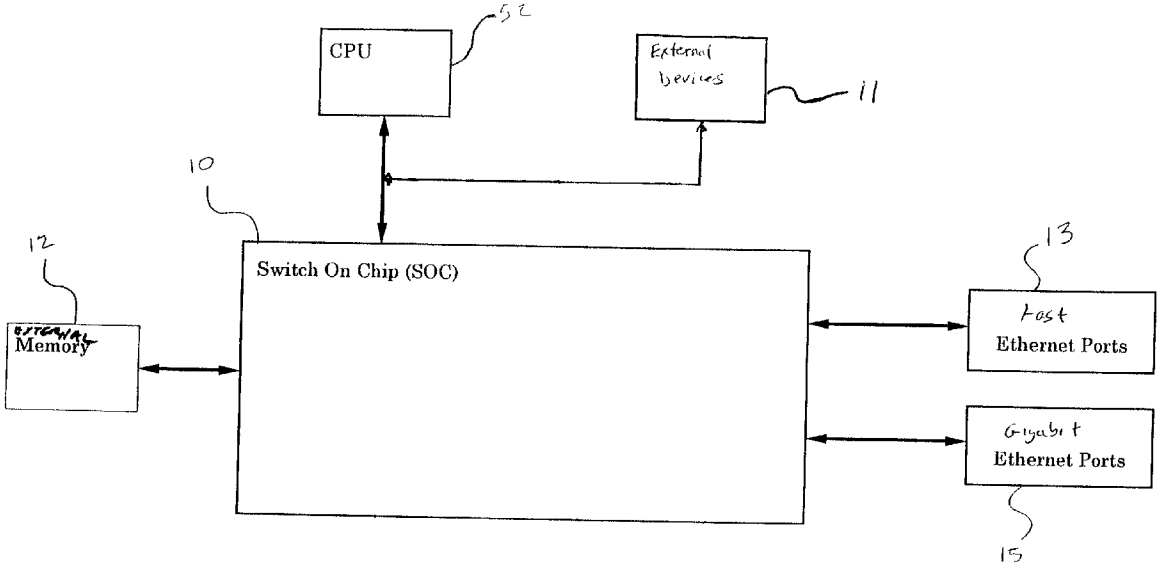

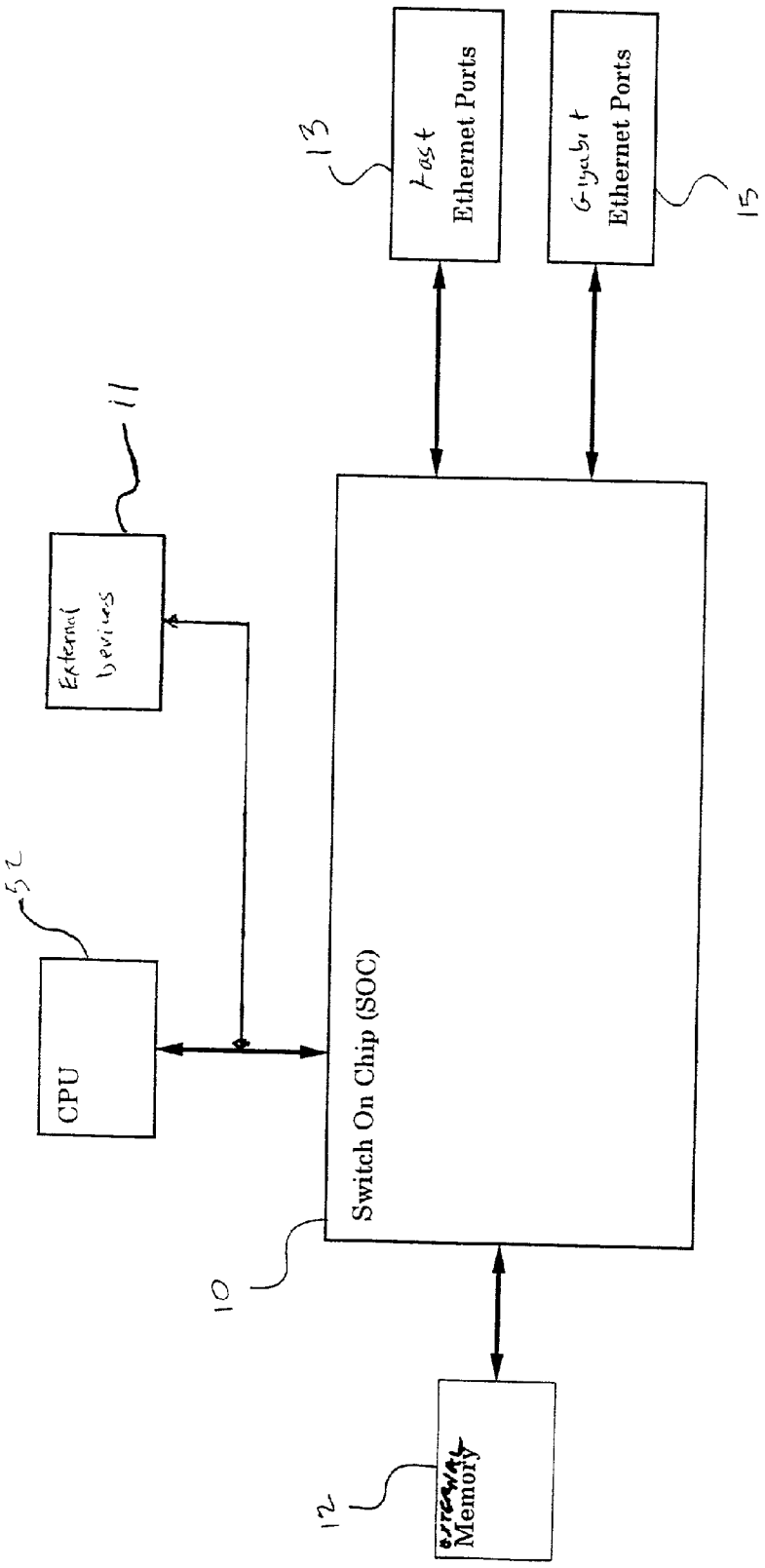
CPU
52
External Devices
11
Switch On Chip (SOC)
10
Memory
12
Fast Ethernet Ports
13
Gigabit Ethernet Ports
15

Fig. 1

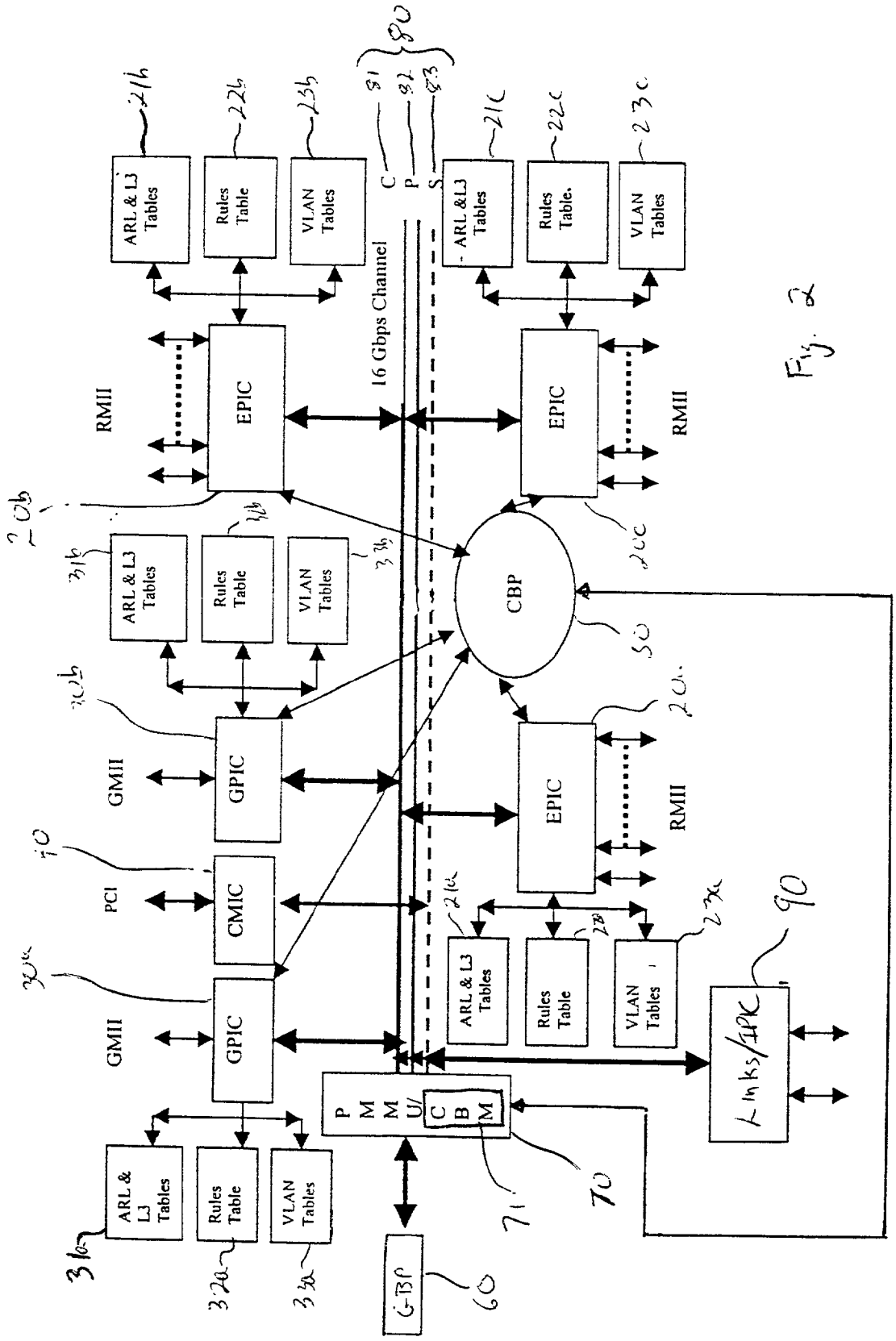
ARL & L3 Tables
Rules Table
VLAN Tables
EPIC
RMII
16 Gbps Channel
C
P
S
CBP
GPIC
GMII
CMIC
PCI
PMMU/CBM
GBP
Links/IPK

Fig. 2

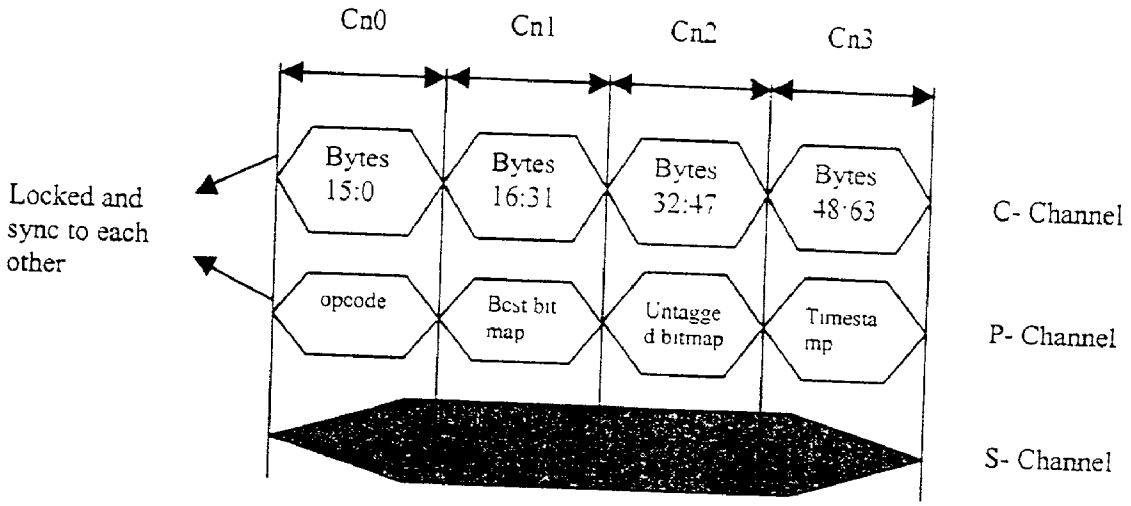
Cn0
Cn1
Cn2
Cn3
Locked and sync to each other
Bytes 15:0
Bytes 16:31
Bytes 32:47
Bytes 48:63
C- Channel
opcode
Best bit map
Untagged bitmap
Timestamp
P- Channel
S- Channel

Fig. 3

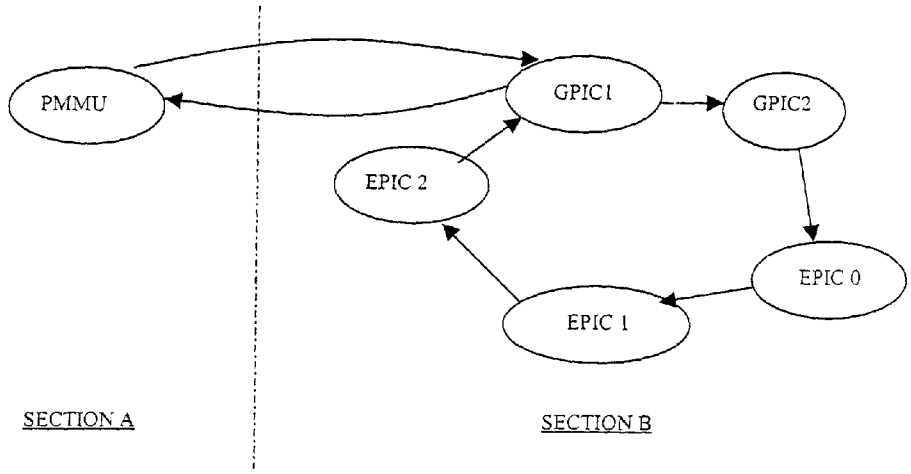
PMMU
GPIC1
GPIC2
EPIC 2
EPIC 0
EPIC 1
SECTION A
SECTION B

Fig. 4a

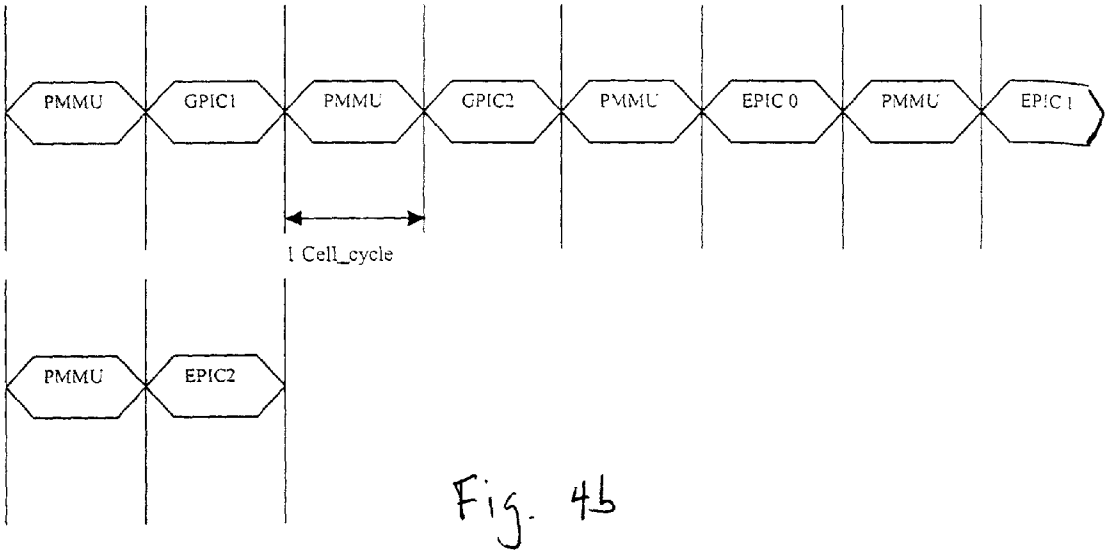
PMMU
GPIC1
PMMU
GPIC2
PMMU
EPIC 0
PMMU
EPIC 1
1 Cell_cycle
PMMU
EPIC2

Fig. 4b

Protocol Channel Messages

30	28		26	24	22	20	18	16	14	12		10	8		6	4	2	0
Opc ode	I p	I P X	Rese rved	Nxt cell	Src Dest Port			Cos	J	S	E	Cr c	P	O	Len			

30	28	26	24	22	20	18	16	14	12	10	8	6	4	2	0
Reserved		Bc/Mc Portbitmap													

30	28	26	24	22	20	18	16	14	12	10	8	6	4	2	0
U	Res	Untagged Portbitmap / Src Port Number (bit0..5)													

30	28	26	24	22	20	18	16	14	12	10	8	6	4	2	0
CPU Opcodes									TimeStamp						

Fig. 5

Side Band Channel Messages

30	28	26	24	22	20	18	16	14	12	10	8	6	4	2	0
Opcode			Dest Port / Destination Dev Id			Src Port			DataLen			E	EC ode	Cos	C
Address															
Data															

Fig. 6

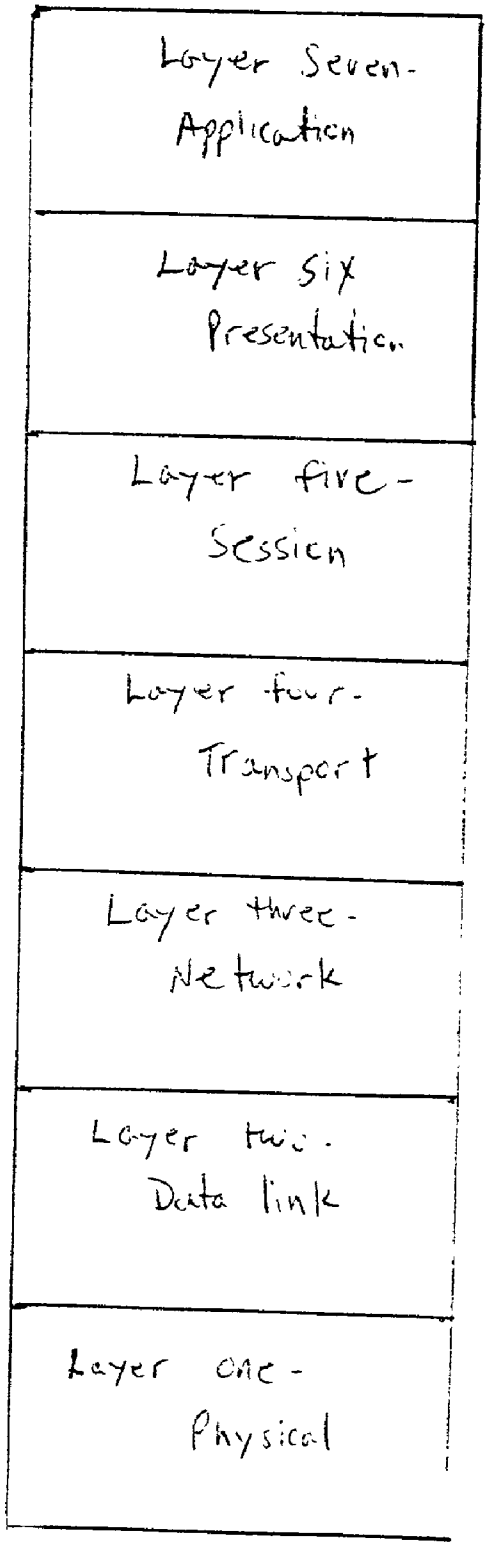

Figure 7
Prior Art

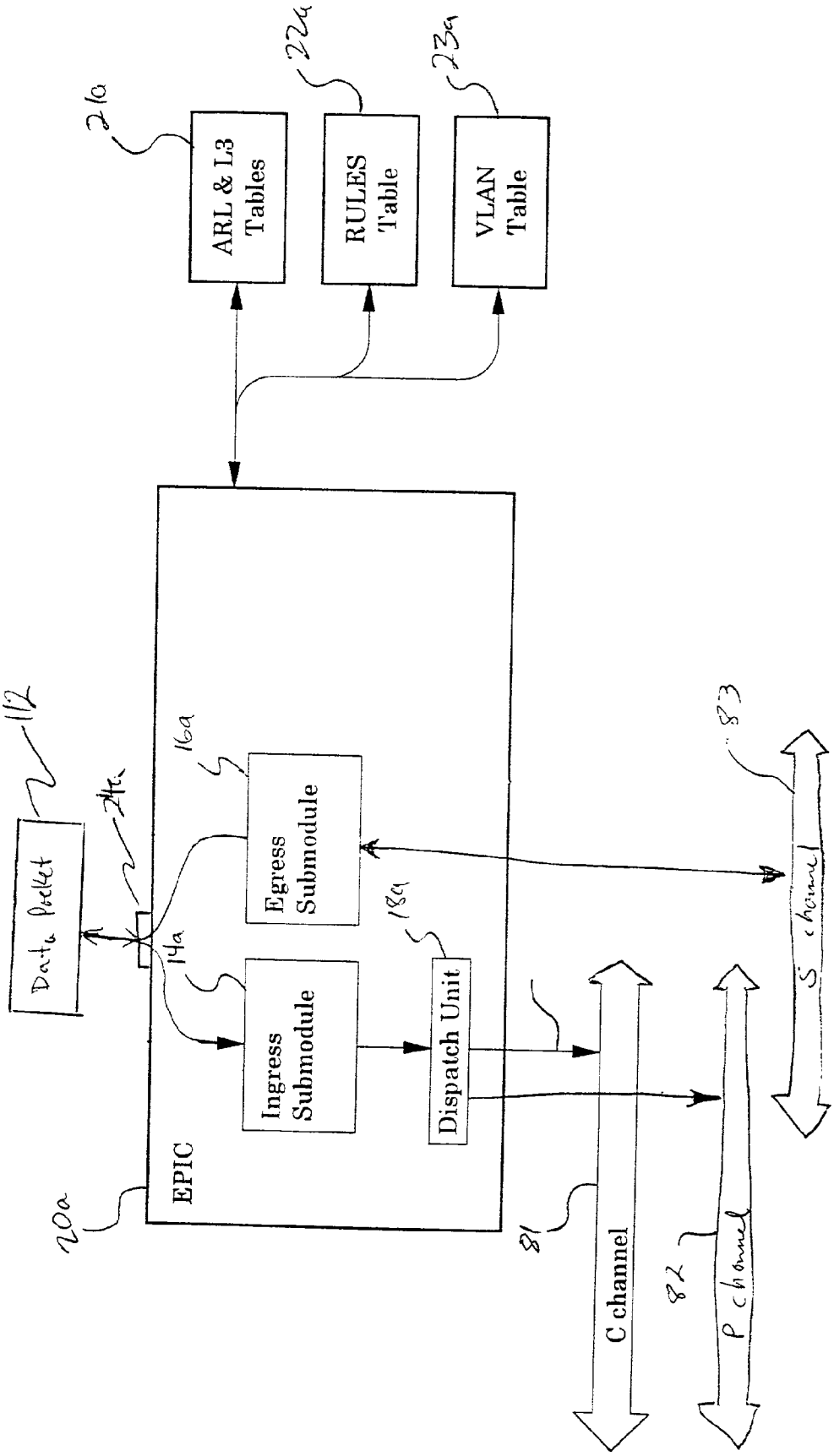
ARL & L3 Tables
RULES Table
VLAN Table
Egress Submodule
Ingress Submodule
Dispatch Unit
EPIC
C channel
P channel
S channel
Data Packet
21a
22a
23a
16a
14a
18a
20a
112
24
81
82
83

Fig 8

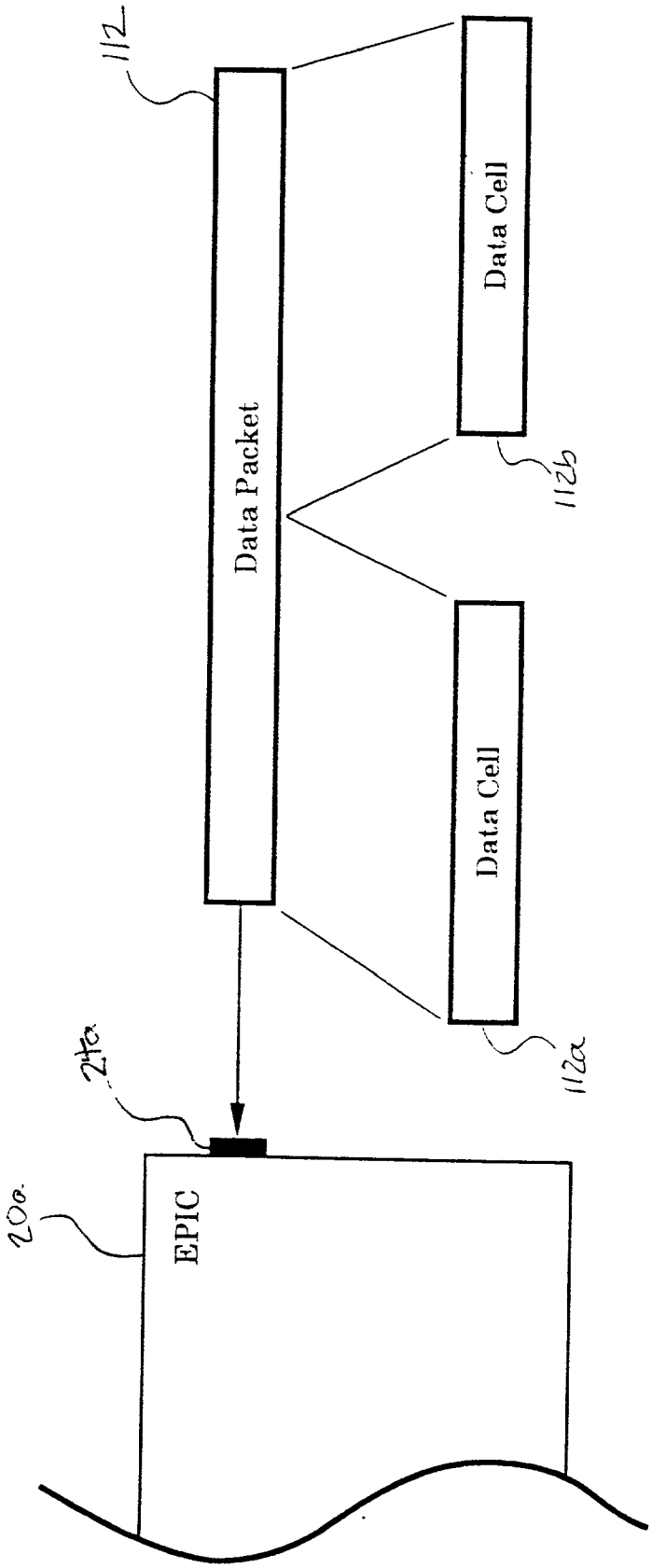

Fig. 9

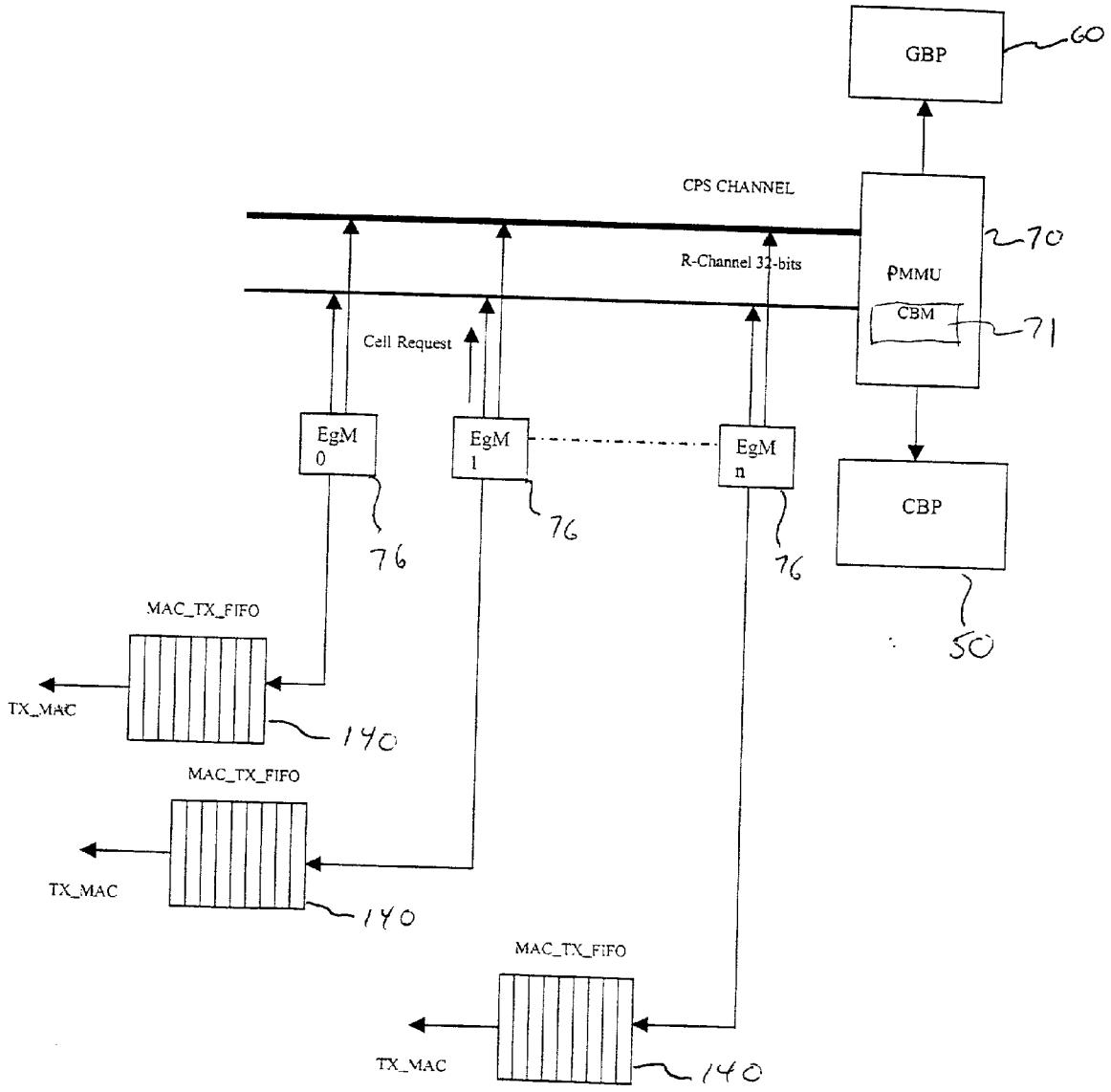
GBP
60
CPS CHANNEL
R-Channel 32-bits
PMMU
CBM
70
71
Cell Request
EgM 0
EgM 1
EgM n
76
76
76
CBP
50
MAC_TX_FIFO
TX_MAC
140
MAC_TX_FIFO
TX_MAC
140
MAC_TX_FIFO
TX_MAC
140

Fig. 10

Line 0 →	FC | LC | BC/MC | Cpy_cnt(5b) | Cell_length (7b) . CRC (2b) | NC_header (16b) Src Count(6) IPX IP | Time_Stamp (14b) | O bits(2b) | P | NextCellLen(2b) | CpuOpcode(4b) | Cell_data (0-9B)
Line 1 →	Cell_data (10-27) Bytes
Line 2 →	Cell_data (28-45) Bytes
Line 3 →	Cell_data (46-63) Bytes

Fig. 11

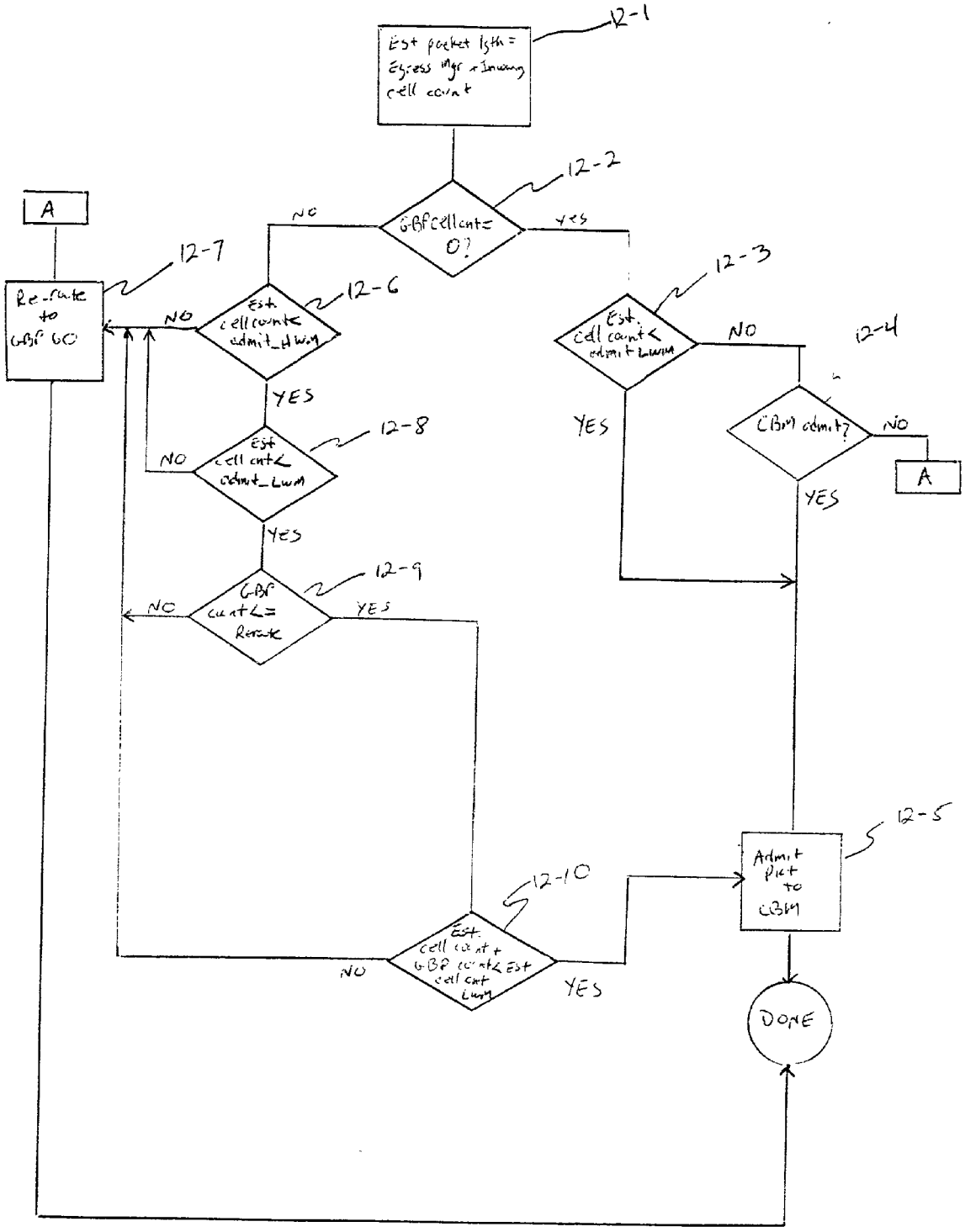
12-1
Est packet lgth = Egress mgr + Incoming cell count
12-2
GBF cell cnt = 0?
NO
YES
12-3
Est. cell cnt < admit_LWM
NO
12-4
CBM admit?
NO
A
YES
12-6
Est. cell cnt < admit_HWM
NO
YES
12-7
Re-route to GBF GO
A
12-8
Est cell cnt < admit_LWM
NO
YES
12-9
GBF cnt <= Reroute
NO
YES
12-10
Est. cell cnt + GBF cnt < Est cell cnt LWM
NO
YES
12-5
Admit pkt to CBM
DONE

Fig. 12

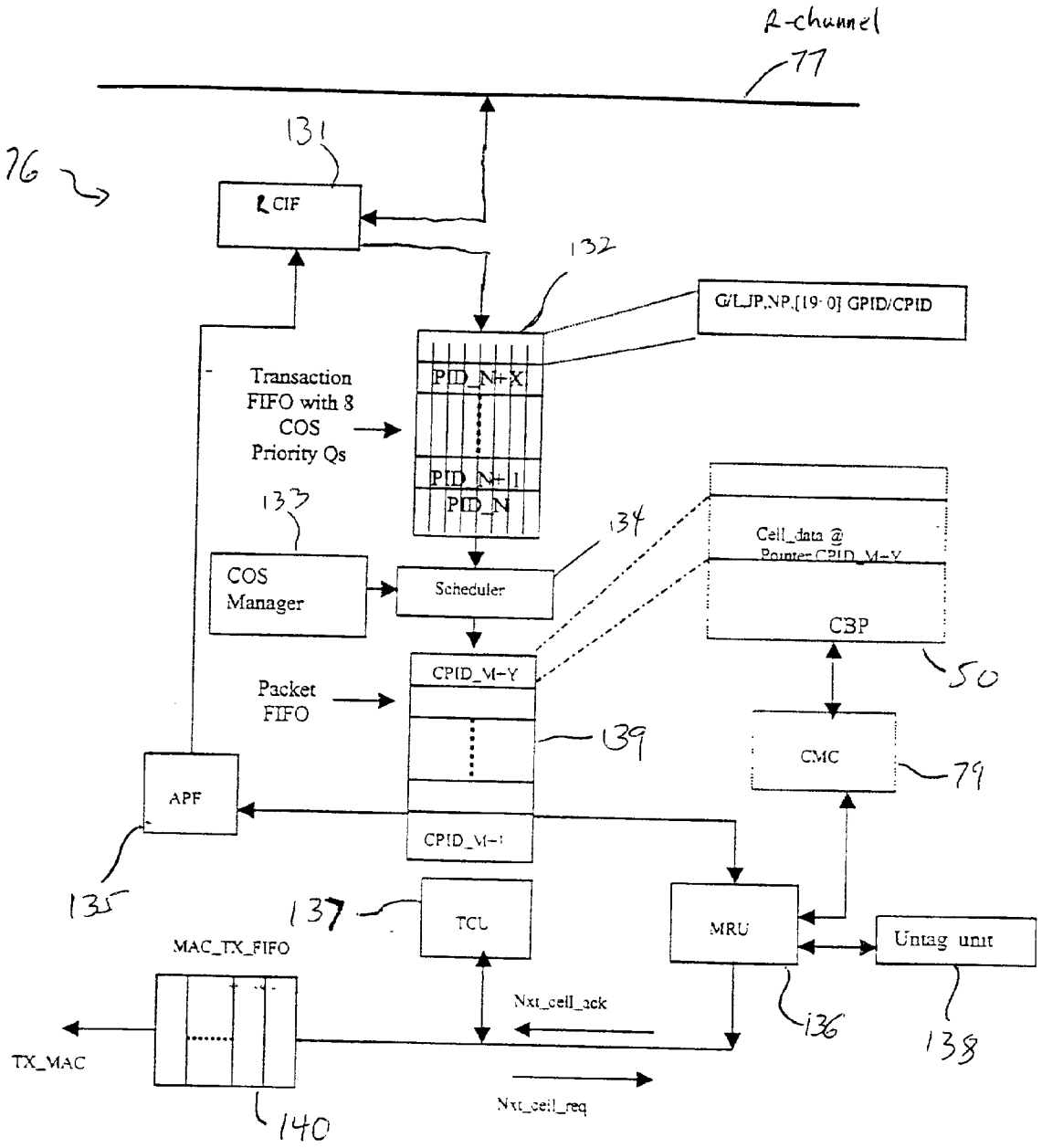
R-channel
77
76
131
R CIF
132
G/L,JP,NP,[19-0] GPID/CPID
Transaction FIFO with 8 COS Priority Qs
PID_N+X
PID_N+1
PID_N
133
COS Manager
Scheduler
134
Cell_data @ Pointer CPID_M-Y
CBP
50
CPID_M-Y
Packet FIFO
139
CMC
79
APF
CPID_M-1
135
137
TCU
MRU
Untag unit
MAC_TX_FIFO
Nxt_cell_ack
136
138
TX_MAC
Nxt_cell_req
140

Fig 13

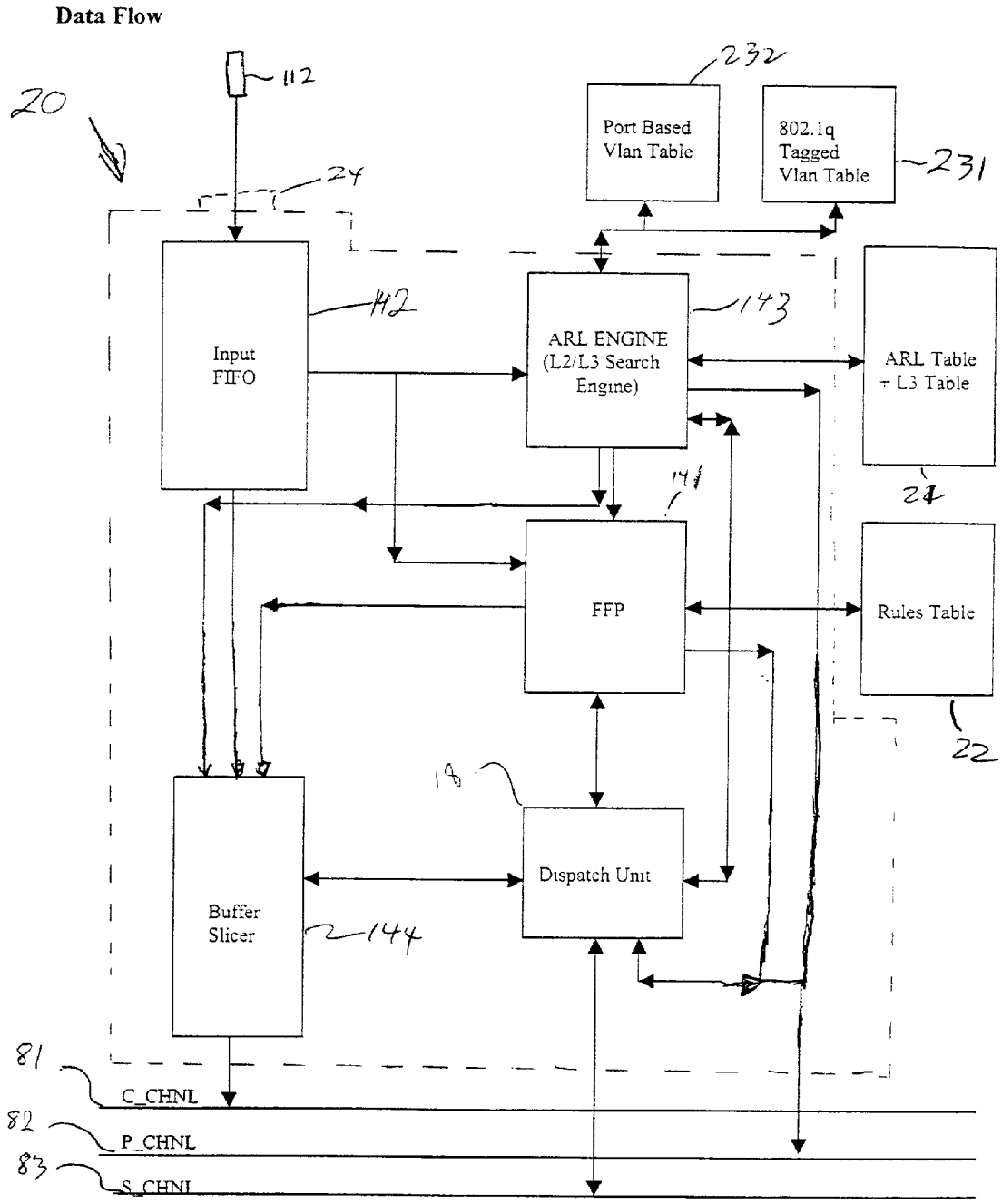
Data Flow
20
112
24
232
Port Based Vlan Table
802.1q Tagged Vlan Table
231
Input FIFO
142
ARL ENGINE (L2/L3 Search Engine)
143
ARL Table + L3 Table
24
141
FFP
Rules Table
22
18
Dispatch Unit
Buffer Slicer
144
81
C_CHNL
82
P_CHNL
83
S_CHNL

Fig. 14

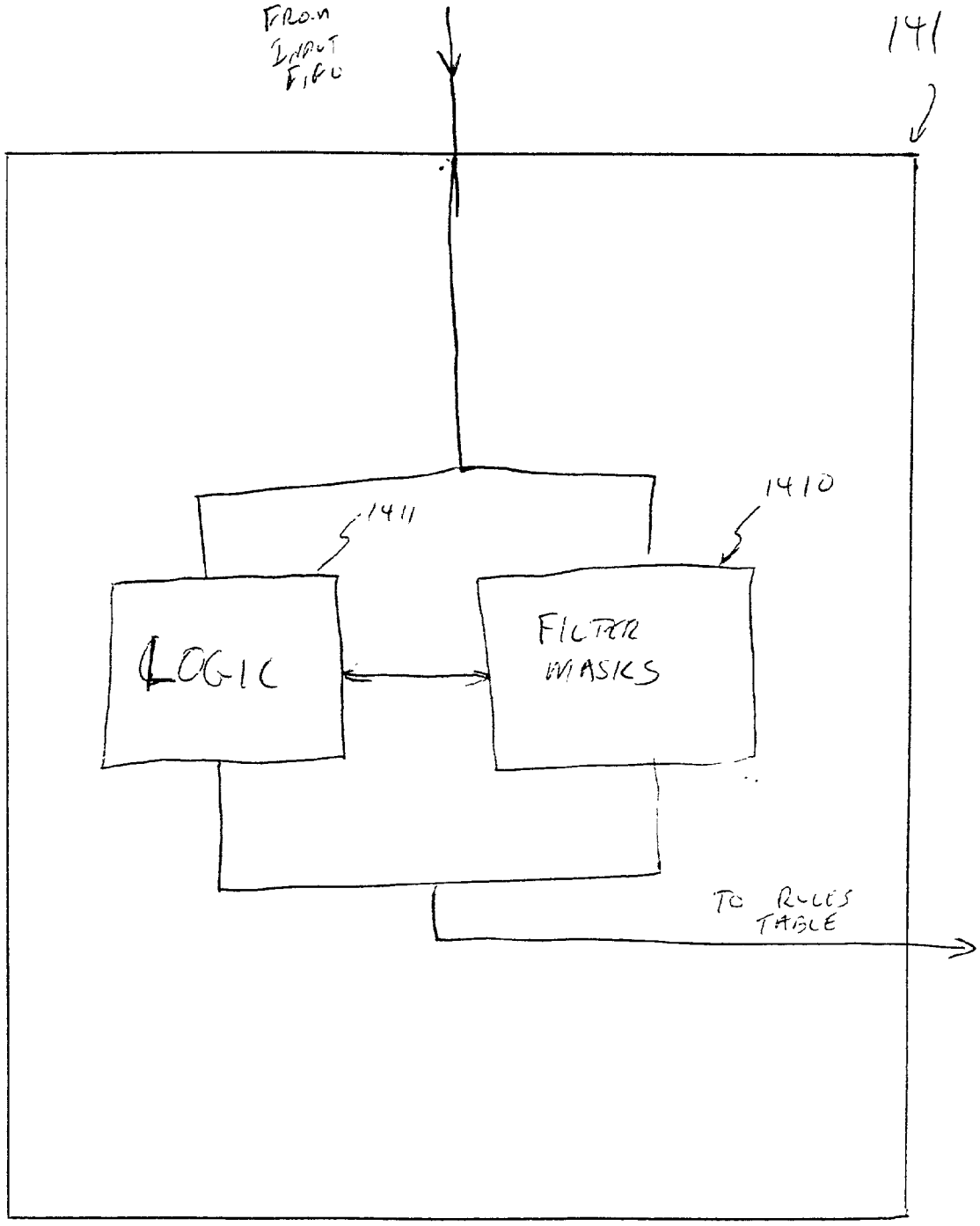
FROM INPUT FIFO
141
1410
1411
LOGIC
FILTER MASKS
TO RULES TABLE

FIG. 15

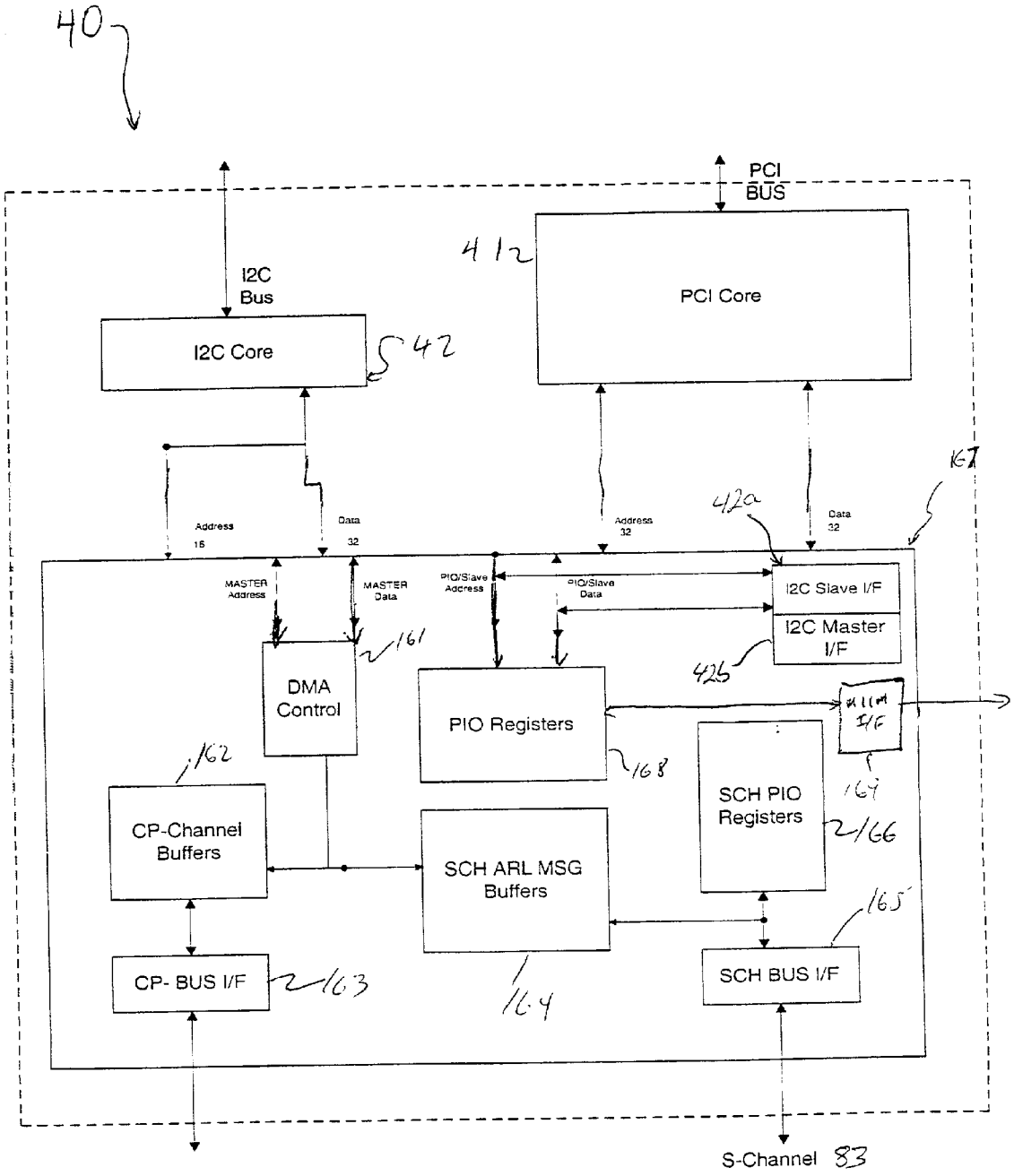

C channel 81
P channel 82

Fig. 16

FFP Programming Flow Chart

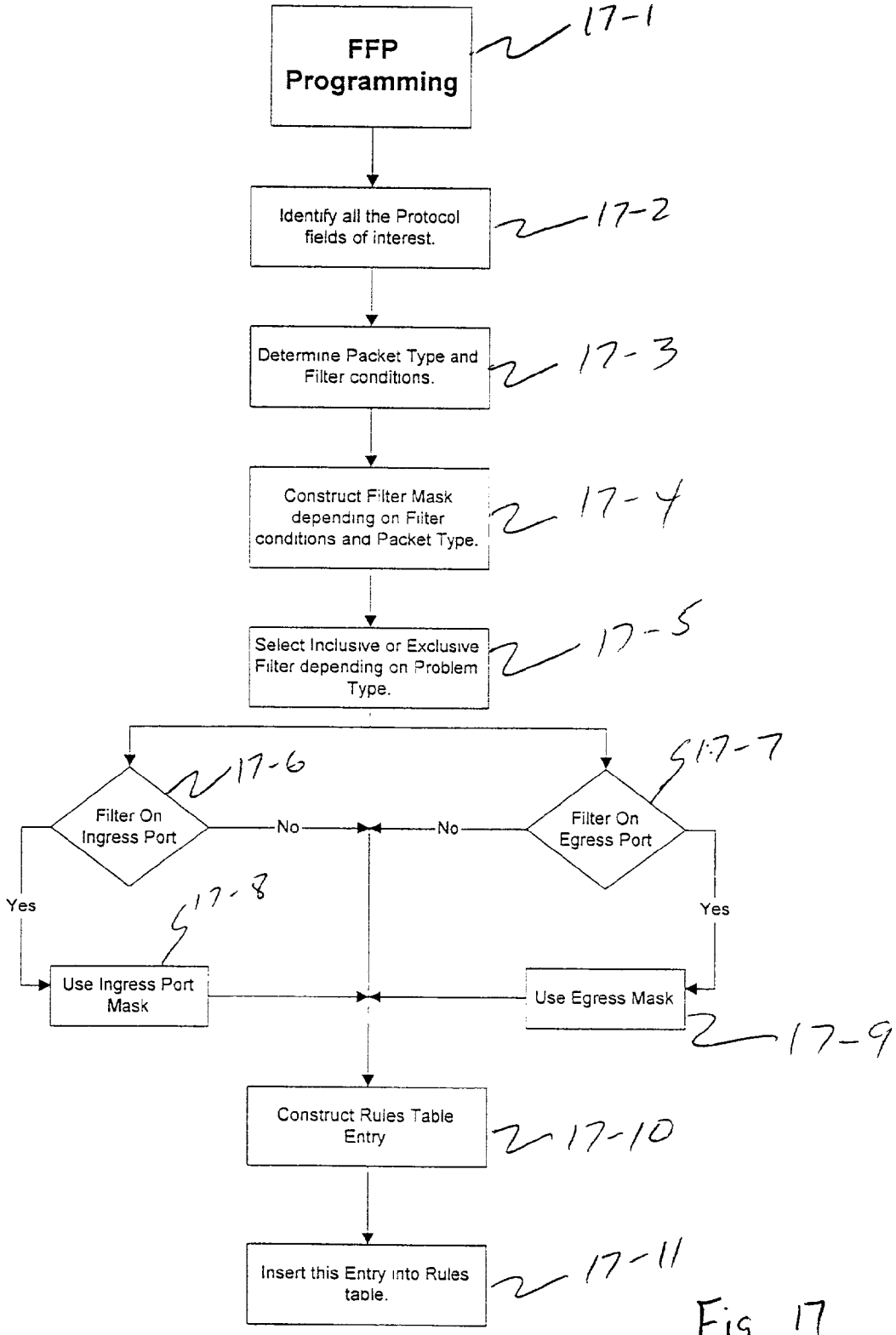

Fig. 17

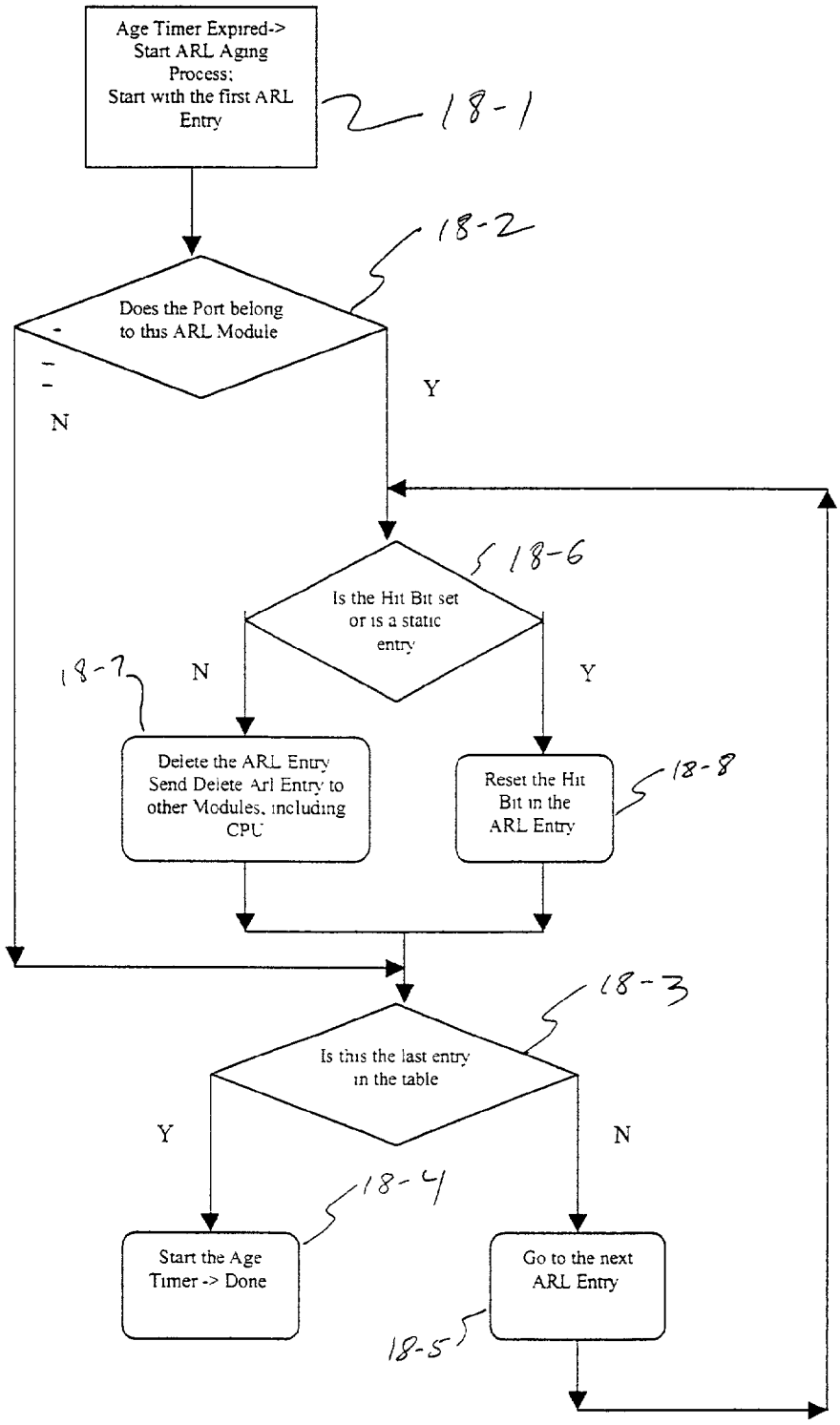
Age Timer Expired-> Start ARL Aging Process; Start with the first ARL Entry
18-1
18-2
Does the Port belong to this ARL Module
N
Y
18-6
Is the Hit Bit set or is a static entry
18-7
N
Y
Delete the ARL Entry Send Delete Arl Entry to other Modules, including CPU
Reset the Hit Bit in the ARL Entry
18-8
18-3
Is this the last entry in the table
Y
N
18-4
Start the Age Timer -> Done
Go to the next ARL Entry
18-5

Fig. 18

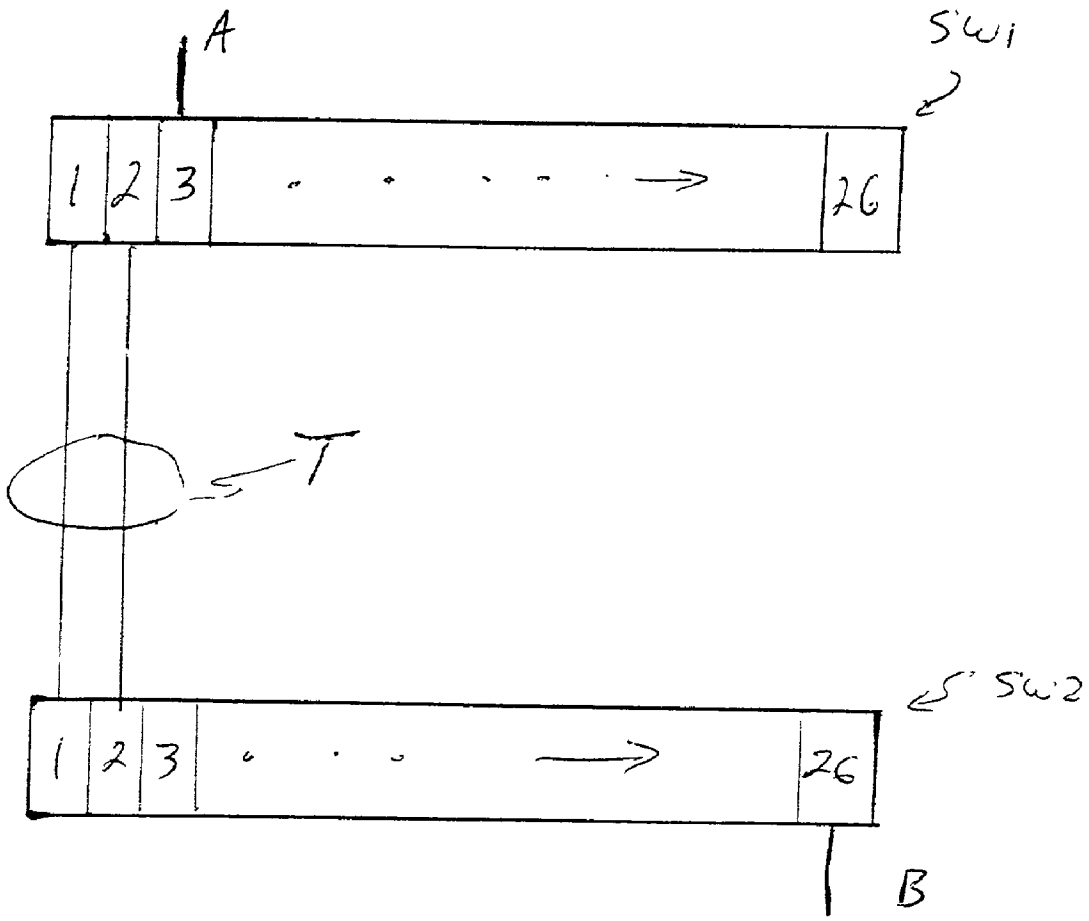

Fig 19

NETWORK SWITCHING ARCHITECTURE WITH FAST FILTERING PROCESSOR

REFERENCE TO RELATED APPLICATIONS

[0001] This application claims priority of U.S. Provisional Patent Application Ser. No. 60/092,220, filed on Jul. 8, 1998, and U.S. Provisional Application No. 60/095,972, filed on Aug. 10, 1998. The contents of these provisional applications is hereby incorporated by reference.

BACKGROUND OF THE INVENTION

[0002] 1. Field of the Invention

[0003] The invention relates to a method and apparatus for high performance switching in local area communications networks such as token ring, ATM, ethernet, fast ethernet, and gigabit ethernet environments, generally known as LANs. In particular, the invention relates to a new switching architecture in an integrated, modular, single chip solution, which can be implemented on a semiconductor substrate such as a silicon chip.

[0004] 2. Description of the Related Art

[0005] As computer performance has increased in recent years, the demands on computer networks has significantly increased; faster computer processors and higher memory capabilities need networks with high bandwidth capabilities to enable high speed transfer of significant amounts of data. The well-known ethernet technology, which is based upon numerous IEEE ethernet standards, is one example of computer networking technology which has been able to be modified and improved to remain a viable computing technology. A more complete discussion of prior art networking systems can be found, for example, in SWITCHED AND FAST ETHERNET, by Breyer and Riley (Ziff-Davis, 1996), and numerous IEEE publications relating to IEEE **802** standards. Based upon the Open Systems Interconnect (OSI) 7-layer reference model, network capabilities have grown through the development of repeaters, bridges, routers, and, more recently, "switches", which operate with various types of communication media. Thickwire, thinwire, twisted pair, and optical fiber are examples of media which has been used for computer networks. Switches, as they relate to computer networking and to ethernet, are hardware-based devices which control the flow of data packets or cells based upon destination address information which is available in each packet. A properly designed and implemented switch should be capable of receiving a packet and switching the packet to an appropriate output port at what is referred to wirespeed or linespeed, which is the maximum speed capability of the particular network. Basic ethernet wirespeed is up to 10 megabits per second, and Fast Ethernet is up to 100 megabits per second. The newest ethernet is referred to as gigabit ethernet, and is capable of transmitting data over a network at a rate of up to 1,000 megabits per second. As speed has increased, design constraints and design requirements have become more and more complex with respect to following appropriate design and protocol rules and providing a low cost, commercially viable solution. For example, high speed switching requires high speed memory to provide appropriate buffering of packet data; conventional Dynamic Random Access Memory (DRAM) is relatively slow, and requires hardware-driven refresh. The speed of DRAMs, therefore, as buffer memory in network switching, results in valuable time being lost, and it becomes almost impossible to operate the switch or the network at linespeed. Furthermore, external CPU involvement should be avoided, since CPU involvement also makes it almost impossible to operate the switch at linespeed. Additionally, as network switches have become more and more complicated with respect to requiring rules tables and memory control, a complex multi-chip solution is necessary which requires logic circuitry, sometimes referred to as glue logic circuitry, to enable the various chips to communicate with each other. Additionally, cost/benefit tradeoffs are necessary with respect to expensive but fast SRAMs versus inexpensive but slow DRAMs. Additionally, DRAMs, by virtue of their dynamic nature, require refreshing of the memory contents in order to prevent losses thereof. SRAMs do not suffer from the refresh requirement, and have reduced operational overhead which compared to DRAMs such as elimination of page misses, etc. Although DRAMs have adequate speed when accessing locations on the same page, speed is reduced when other pages must be accessed.

[0006] Referring to the OSI 7-layer reference model discussed previously, and illustrated in **FIG. 7**, the higher layers typically have more information. Various types of products are available for performing switching-related functions at various levels of the OSI model. Hubs or repeaters operate at layer one, and essentially copy and "broadcast" incoming data to a plurality of spokes of the hub. Layer two switching-related devices are typically referred to as multiport bridges, and are capable of bridging two separate networks. Bridges can build a table of forwarding rules based upon which MAC (media access controller) addresses exist on which ports of the bridge, and pass packets which are destined for an address which is located on an opposite side of the bridge. Bridges typically utilize what is known as the "spanning tree" algorithm to eliminate potential data loops; a data loop is a situation wherein a packet endlessly loops in a network looking for a particular address. The spanning tree algorithm defines a protocol for preventing data loops. Layer three switches, sometimes referred to as routers, can forward packets based upon the destination network address. Layer three switches are capable of learning addresses and maintaining tables thereof which correspond to port mappings. Processing speed for layer three switches can be improved by utilizing specialized high performance hardware, and off loading the host CPU so that instruction decisions do not delay packet forwarding.

SUMMARY OF THE INVENTION

[0007] The present invention is directed to a switch-on-chip solution for a network switch, capable of use at least on ethernet, fast ethernet, and gigabit ethernet systems, wherein all of the switching hardware is disposed on a single microchip. The present invention is configured to maximize the ability of packet-forwarding at linespeed, and to also provide a modular configuration wherein a plurality of separate modules are configured on a common chip, and wherein individual design changes to particular modules do not affect the relationship of that particular module to other modules in the system. The present invention, therefore, is directed to a method and apparatus for network switching, and a network switching architecture.

[0008] The invention is therefore directed to a network switch for network communications, with the data switch including at least one first data port interface. The first data port interface supports a plurality of data ports which transmit and receive data at a first data rate. At least one second data port interface is provided; the at least one second data port interface supports a plurality of data ports transmitting and receiving data at a second data rate. A CPU interface is provided, with the CPU interface configured to communicate with a CPU. An internal memory is provided, and communicates with the at least one first data port interface and the at least one second data port interface. A memory management unit is provided, and includes an external memory interface for communicating data from at least one of the first data port interface and the second data port interface and an external memory. A communication channel is provided, with the communication channel communicating data and messaging information between the at least one first data port interface, the at least one second data port interface, the internal memory, and the memory management unit. One data port interface of the first and second data port interfaces includes a fast filtering processor. The fast filtering processor filters packets coming into the one data port interface, and takes selective filter action based upon a filtering result. The fast filtering processor is programmable by inputs from the CPU through the CPU interface.

[0009] The invention is also directed to a switch which includes a rules table interface, with the fast filtering processor applying a filter mask to an incoming packet, providing a filter result. The filter result is applied to predetermined rules in the rules table, and action is taken on the packet based upon the filtering result.

[0010] The invention is also directed to a method of handling data packets in a network switch, with the method including the step of placing incoming packets into an input queue, and applying the input data packets to an address resolution logic engine. A lookup is performed to determine whether certain packet fields are stored in a lookup table. The incoming packet is filtered through a fast filtering processor in order to determine what specific actions should be taken to modify the packet for further handling. The packet is discarded, forwarded, or modified based upon the filtering step. If the packet is to be forwarded, a control message is applied to the packet in order to control further packet forwarding. The packet data is placed on a first communication channel, and the control message is placed on a second communication channel, with the first and second channels being separate but synchronized with each other.

[0011] The invention also comprises a method of creating a packet handling filter for a network switch. The method comprises the steps of providing a processor for processing and entering filter parameters, and providing a rules table to implement a filter mask. Protocol fields of interest are identified for selected fields of a data packet type. Filter conditions are therefore determined for the selected packet type. A series of digital values are provided, representing desired filter conditions for the preselected packet type. The filter mask comprises a bit map for logical comparison with an incoming data packet. The next step is determining whether the filter will be an inclusive or exclusive filter, and filtering actions are configured based thereupon. It is then determined whether or not the filter will be applied to incoming data packets or outgoing data packets. If the filter is for incoming data packets, the filter mask is configured to be an ingress port filter mask. If the filter is for outgoing packets, the filter mask is configured to be an egress filter mask. Rules table entries are constructed, consistent with parameters of the configured filter mask. The rules table entries are then entered into the rules table.

BRIEF DESCRIPTION OF THE DRAWINGS

[0012] The objects and features of the invention will be more readily understood with reference to the following description and the attached drawings, wherein:

[0013] **FIG. 1** is a general block diagram of elements of the present invention;

[0014] **FIG. 2** is a more detailed block diagram of a network switch according to the present invention;

[0015] **FIG. 3** illustrates the data flow on the CPS channel of a network switch according to the present invention;

[0016] **FIG. 4A** illustrates demand priority round robin arbitration for access to the C-channel of the network switch;

[0017] **FIG. 4B** illustrates access to the C-channel based upon the round robin arbitration illustrated in **FIG. 4A**;

[0018] **FIG. 5** illustrates P-channel message types;

[0019] **FIG. 6** illustrates a message format for S channel message types;

[0020] **FIG. 7** is an illustration of the OSI 7 layer reference model;

[0021] **FIG. 8** illustrates an operational diagram of an EPIC module;

[0022] **FIG. 9** illustrates the slicing of a data packet on the ingress to an EPIC module;

[0023] **FIG. 10** is a detailed view of elements of the PMMU;

[0024] **FIG. 11** illustrates the CBM cell format;

[0025] **FIG. 12** illustrates an internal/external memory admission flow chart;

[0026] **FIG. 13** illustrates a block diagram of an egress manager **76** illustrated in **FIG. 10**;

[0027] **FIG. 14** illustrates more details of an EPIC module;

[0028] **FIG. 15** is a block diagram of a fast filtering processor (FFP);

[0029] **FIG. 16** is a block diagram of the elements of CMIC **40**;

[0030] **FIG. 17** illustrates a series of steps which are used to program an FFP;

[0031] **FIG. 18** is a flow chart illustrating the aging process for ARL (L2) and L3 tables; and

[0032] **FIG. 19** illustrates communication using a trunk group according to the present invention.

DETAILED DESCRIPTION OF THE PREFERRED EMBODIMENTS

[0033] **FIG. 1** illustrates a configuration wherein a switch-on-chip (SOC) **10**, in accordance with the present invention, is functionally connected to external devices **11**, external memory **12**, fast ethernet ports **13**, and gigabit ethernet ports **15**. For the purposes of this embodiment, fast ethernet ports **13** will be considered low speed ethernet ports, since they are capable of operating at speeds ranging from 10 Mbps to 100 Mbps, while the gigabit ethernet ports **15**, which are high speed ethernet ports, are capable of operating at 1000 Mbps. External devices **11** could include other switching devices for expanding switching capabilities, or other devices as may be required by a particular application. External memory **12** is additional off-chip memory, which is in addition to internal memory which is located on SOC **10**, as will be discussed below. CPU **52** can be used as necessary to program SOC **10** with rules which are appropriate to control packet processing. However, once SOC **10** is appropriately programmed or configured, SOC **10** operates, as much as possible, in a free running manner without communicating with CPU **52**. Because CPU **52** does not control every aspect of the operation of SOC **10**, CPU **52** performance requirements, at least with respect to SOC **10**, are fairly low. A less powerful and therefore less expensive CPU **52** can therefore be used when compared to known network switches. As also will be discussed below, SOC **10** utilizes external memory **12** in an efficient manner so that the cost and performance requirements of memory **12** can be reduced. Internal memory on SOC **10**, as will be discussed below, is also configured to maximize switching throughput and minimize costs.

[0034] It should be noted that any number of fast ethernet ports **13** and gigabit ethernet ports **15** can be provided. In one embodiment, a maximum of 24 fast ethernet ports **13** and 2 gigabit ports **15** can be provided. Similarly, additional interconnect links to additional external devices **11**, external memory **12**, and CPUs **52** may be provided as necessary.

[0035] **FIG. 2** illustrates a more detailed block diagram of the functional elements of SOC **10**. As evident from **FIG. 2** and as noted above, SOC **10** includes a plurality of modular systems on-chip, with each modular system, although being on the same chip, being functionally separate from other modular systems. Therefore, each module can efficiently operate in parallel with other modules, and this configuration enables a significant amount of freedom in updating and re-engineering SOC **10**.

[0036] SOC **10** includes a plurality of Ethernet Port Interface Controllers (EPIC) **20***a*, **20***b*, **20***c*, etc., a plurality of Gigabit Port Interface Controllers (GPIC) **30***a*, **30***b*, etc., a CPU Management Interface Controller (CMIC) **40**, a Common Buffer Memory Pool (CBP) **50**, a Pipelined Memory Management Unit (PMMU) **70**, including a Common Buffer Manager (CBM) **71**, and a system-wide bus structure referred to as CPS channel **80**. The PMMU **70** communicates with external memory **12**, which includes a Global Buffer Memory Pool (GBP) **60**. The CPS channel **80** comprises C channel **81**, P channel **82**, and S channel **83**. The CPS channel is also referred to as the Cell Protocol Sideband Channel, and is a **17** Gbps channel which glues or interconnects the various modules together. As also illustrated in **FIG. 2**, other high speed interconnects can be provided, as shown as an extendible high speed interconnect. In one embodiment of the invention, this interconnect can be in the form of an interconnect port interface controller (IPIC) **90**, which is capable of interfacing CPS channel **80** to external devices **11** through an extendible high speed interconnect link. As will be discussed below, each EPIC **20***a*, **20***b*, and **20***c*, generally referred to as EPIC **20**, and GPIC **30***a* and **30***b*, generally referred to as GPIC **30**, are closely interrelated with appropriate address resolution logic and layer three switching tables **21***a*, **21***b*, **21***c*, **31***a*, **31***b*, rules tables **22***a*, **22***b*, **22***c*, **31***a*, **31***b*, and VLAN tables **23***a*, **23***b*, **23***c*, **31***a*, **31***b*. These tables will be generally referred to as **21**, **31**, **22**, **32**, **23**, **33**, respectively. These tables, like other tables on SOC **10**, are implemented in silicon as two-dimensional arrays.

[0037] In a preferred embodiment of the invention, each EPIC **20** supports **8** fast ethernet ports **13**, and switches packets to and/or from these ports as may be appropriate. The ports, therefore, are connected to the network medium (coaxial, twisted pair, fiber, etc.) using known media connection technology, and communicates with the CPS channel **80** on the other side thereof. The interface of each EPIC **20** to the network medium can be provided through a Reduced Media Internal Interface (RMII), which enables the direct medium connection to SOC **10**. As is known in the art, auto-negotiation is an aspect of fast ethernet, wherein the network is capable of negotiating a highest communication speed between a source and a destination based on the capabilities of the respective devices. The communication speed can vary, as noted previously, between 10 Mbps and 100 Mbps; auto negotiation capability, therefore, is built directly into each EPIC module. The address resolution logic (ARL) and layer three tables (ARL/L3) **21***a*, **21***b*, **21***c*, rules table **22***a*, **22***b*, **22***c*, and VLAN tables **23***a*, **23***b*, and **23***c* are configured to be part of or interface with the associated EPIC in an efficient and expedient manner, also to support wire-speed packet flow.

[0038] Each EPIC **20** has separate ingress and egress functions. On the ingress side, self-initiated and CPU-initiated learning of level **2** address information can occur. Address resolution logic is utilized to assist in this task. Address aging is built in as a feature, in order to eliminate the storage of address information which is no longer valid or useful. The EPIC also carries out layer **2** mirroring. A fast filtering processor (FFP) **141** (see **FIG. 14**) is incorporated into the EPIC, in order to accelerate packet forwarding and enhance packet flow. The ingress side of each EPIC and GPIC, illustrated in **FIG. 8** as ingress submodule **14**, has a significant amount of complexity to be able to properly process a significant number of different types of packets which may come in to the port, for linespeed buffering and then appropriate transfer to the egress. Functionally, each port on each module of SOC **10** has a separate ingress submodule **14** associated therewith. From an implementation perspective, however, in order to minimize the amount of hardware implemented on the single-chip SOC **10**, common hardware elements in the silicon will be used to implement a plurality of ingress submodules on each particular module. The configuration of SOC **10** discussed herein enables concurrent lookups and filtering, and therefore, processing of up to **6.6** million packets per second. Layer two lookups, Layer three lookups and filtering occur simultaneously to achieve this level of performance. On the egress side, the EPIC is capable of supporting packet polling

based either as an egress management or class of service (COS) function. Rerouting/scheduling of packets to be transmitted can occur, as well as head-of-line (HOL) blocking notification, packet aging, cell reassembly, and other functions associated with ethernet port interface.

[**0039**] Each GPIC **30** is similar to each EPIC **20**, but supports only one gigabit ethernet port, and utilizes a port-specific ARL table, rather than utilizing an ARL table which is shared with any other ports. Additionally, instead of an RMII, each GPIC port interfaces to the network medium utilizing a gigabit media independent interface (GMII).

[**0040**] CMIC **40** acts as a gateway between the SOC **10** and the host CPU. The communication can be, for example, along a PCI bus, or other acceptable communications bus. CMIC **40** can provide sequential direct mapped accesses between the host CPU **52** and the SOC **10**. CPU **52**, through the CMIC **40**, will be able to access numerous resources on SOC **10**, including MIB counters, programmable registers, status and control registers, configuration registers, ARL tables, port-based VLAN tables, IEEE 802.1q VLAN tables, layer three tables, rules tables, CBP address and data memory, as well as GBP address and data memory. Optionally, the CMIC **40** can include DMA support, DMA chaining and scatter-gather, as well as master and target PCI**64**.

[**0041**] Common buffer memory pool or CBP **50** can be considered to be the on-chip data memory. In one embodiment of the invention, the CBP **50** is first level high speed SRAM memory, to maximize performance and minimize hardware overhead requirements. The CBP can have a size of, for example, 720 kilobytes running at 132 MHz. Packets stored in the CBP **50** are typically stored as cells, rather than packets. As illustrated in the figure, PMMU **70** also contains the Common Buffer Manager (CBM) **71** thereupon. CBM **71** handles queue management, and is responsible for assigning cell pointers to incoming cells, as well as assigning common packet IDs (CPID) once the packet is fully written into the CBP. CBM **71** can also handle management of the on-chip free address pointer pool, control actual data transfers to and from the data pool, and provide memory budget management.

[**0042**] Global memory buffer pool or GBP **60** acts as a second level memory, and can be located on-chip or off chip. In the preferred embodiment, GBP **60** is located off chip with respect to SOC **10**. When located off-chip, GBP **60** is considered to be a part of or all of external memory **12**. As a second level memory, the GBP does not need to be expensive high speed SRAMs, and can be a slower less expensive memory such as DRAM. The GBP is tightly coupled to the PMMU **70**, and operates like the CBP in that packets are stored as cells. For broadcast and multicast messages, only one copy of the packet is stored in GBP **60**.

[**0043**] As shown in the figure, PMMU **70** is located between GBP **60** and CPS channel **80**, and acts as an external memory interface. In order to optimize memory utilization, PMMU **70** includes multiple read and write buffers, and supports numerous functions including global queue management, which broadly includes assignment of cell pointers for rerouted incoming packets, maintenance of the global FAP, time-optimized cell management, global memory budget management, GPID assignment and egress manager notification, write buffer management, read prefetches based upon egress manager/class of service requests, and smart memory control.

[**0044**] As shown in **FIG. 2**, the CPS channel **80** is actually three separate channels, referred to as the C-channel, the P-channel, and the S-channel. The C-channel is 128 bits wide, and runs at 132 MHz. Packet transfers between ports occur on the C-channel. Since this channel is used solely for data transfer, there is no overhead associated with its use. The P-channel or protocol channel is synchronous or locked with the C-channel. During cell transfers, the message header is sent via the P-channel by the PMMU. The P-channel is 32 bits wide, and runs at 132 MHz.

[**0045**] The S or sideband channel runs at 132 MHz, and is 32 bits wide. The S-channel is used for functions such as four conveying Port Link Status, receive port full, port statistics, ARL table synchronization, memory and register access to CPU and other CPU management functions, and global memory full and common memory full notification.

[**0046**] A proper understanding of the operation of SOC **10** requires a proper understanding of the operation of CPS channel **80**. Referring to **FIG. 3**, it can be seen that in SOC **10**, on the ingress, packets are sliced by an EPIC **20** or GPIC **30** into 64-byte cells. The use of cells on-chip instead of packets makes it easier to adapt the SOC to work with cell based protocols such as, for example, Asynchronous Transfer Mode (ATM). Presently, however, ATM utilizes cells which are 53 bytes long, with 48 bytes for payload and 5 bytes for header. In the SOC, incoming packets are sliced into cells which are 64 bytes long as discussed above, and the cells are further divided into four separate 16 byte cell blocks Cn**0** . . . Cn**3**. Locked with the C-channel is the P-channel, which locks the opcode in synchronization with Cn**0**. A port bit map is inserted into the P-channel during the phase Cn**1**. The untagged bit map is inserted into the P-channel during phase Cn**2**, and a time stamp is placed on the P-channel in Cn**3**. Independent from occurrences on the C and Pchannel, the S-channel is used as a sideband, and is therefore decoupled from activities on the C and P-channel.

[**0047**] Cell or C-Channel

[**0048**] Arbitration for the CPS channel occurs out of band. Every module (EPIC, GPIC, etc.) monitors the channel, and matching destination ports respond to appropriate transactions. C-channel arbitration is a demand priority round robin arbitration mechanism. If no requests are active, however, the default module, which can be selected during the configuration of SOC **10**, can park on the channel and have complete access thereto. If all requests are active, the configuration of SOC **10** is such that the PMMU is granted access every other cell cycle, and EPICs **20** and GPICs **30** share equal access to the C-channel on a round robin basis. **FIGS. 4A and 4B** illustrate a C-channel arbitration mechanism wherein section A is the PMMU, and section B consists of two GPICs and three EPICs. The sections alternate access, and since the PMMU is the only module in section A, it gains access every other cycle. The modules in section B, as noted previously, obtain access on a round robin basis.

[**0049**] Protocol or P-Channel

[**0050**] Referring once again to the protocol or P-channel, a plurality of messages can be placed on the P-channel in order to properly direct flow of data flowing on the C-channel. Since P-channel **82** is 32 bits wide, and a message typically requires 128 bits, four smaller 32 bit messages are put together in order to form a complete P-channel message.

The following list identifies the fields and function and the various bit counts of the 128 bit message on the P-channel.

[0051] Opcode—2 bits long—Identifies the type of message present on the C channel **81**;

[0052] IP Bit—1 bit long—This bit is set to indicate that the packet is an IP switched packet;

[0053] IPX Bit—1 bit long—This bit is set to indicate that the packet is an IPX switched packet;

[0054] Next Cell—2 bits long—A series of values to identify the valid bytes in the corresponding cell on the C channel **81**;

[0055] SRC DEST Port—6 bits long—Defines the port number which sends the message or receives the message, with the interpretation of the source or destination depending upon Opcode;

[0056] Cos—3 bits long—Defines class of service for the current packet being processed;

[0057] J—1 bit long—Describes whether the current packet is a jumbo packet;

[0058] S—1 bit long—Indicates whether the current cell is the first cell of the packet;

[0059] E—1 bit long—Indicates whether the current cell is the last cell of the packet;

[0060] CRC—2 bits long—Indicates whether a Cyclical Redundancy Check (CRC) value should be appended to the packet and whether a CRC value should be regenerated;

[0061] P Bit—1 bit long—Determines whether MMU should Purge the entire packet;

[0062] Len—7 bytes—Identifies the valid number of bytes in current transfer;

[0063] O—2 bits—Defines an optimization for processing by the CPU **52**; and

[0064] Bc/Mc Bitmap—28 bits—Defines the broadcast or multicast bitmap. Identifies egress ports to which the packet should be set, regarding multicast and broadcast messages.

[0065] Untag Bits/Source Port—28/5 bits long—Depending upon Opcode, the packet is transferred from Port to MMU, and this field is interpreted as the untagged bit map. A different Opcode selection indicates that the packet is being transferred from MMU to egress port, and the last six bits of this field is interpreted as the Source Port field. The untagged bits identifies the egress ports which will strip the tag header, and the source port bits identifies the port number upon which the packet has entered the switch;

[0066] U Bit—1 bit long—For a particular Opcode selection (0×01, this bit being set indicates that the packet should leave the port as Untagged; in this case, tag stripping is performed by the appropriate MAC;

[0067] CPU Opcode—18 bits long—These bits are set if the packet is being sent to the CPU for any reason. Opcodes are defined based upon filter match, learn bits being set, routing bits, destination lookup failure (DLF), station movement, etc;

[0068] Time Stamp—14 bits—The system puts a time stamp in this field when the packet arrives, with a granularity of 1 μsec.

[0069] The opcode field of the P-channel message defines the type of message currently being sent. While the opcode is currently shown as having a width of 2 bits, the opcode field can be widened as desired to account for new types of messages as may be defined in the future. Graphically, however, the P-channel message type defined above is shown in **FIG. 5**.

[0070] An early termination message is used to indicate to CBM **71** that the current packet is to be terminated. During operation, as discussed in more detail below, the status bit (S) field in the message is set to indicate the desire to purge the current packet from memory. Also in response to the status bit all applicable egress ports would purge the current packet prior to transmission.

[0071] The Src Dest Port field of the P-channel message, as stated above, define the destination and source port addresses, respectively. Each field is 6 bits wide and therefore allows for the addressing of sixty-four ports.

[0072] The CRC field of the message is two bits wide and defines CRC actions. Bit **0** of the field provides an indication whether the associated egress port should append a CRC to the current packet. An egress port would append a CRC to the current packet when bit **0** of the CRC field is set to a logical one. Bit **1** of the CRC field provides an indication whether the associated egress port should regenerate a CRC for the current packet. An egress port would regenerate a CRC when bit **1** of the CRC field is set to a logical one. The CRC field is only valid for the last cell transmitted as defined by the E bit field of P-channel message set to a logical one.

[0073] As with the CRC field, the status bit field (st), the Len field, and the Cell Count field of the message are only valid for the last cell of a packet being transmitted as defined by the E bit field of the message.

[0074] Last, the time stamp field of the message has a resolution of 1 μs and is valid only for the first cell of the packet defined by the S bit field of the message. A cell is defined as the first cell of a received packet when the S bit field of the message is set to a logical one value.

[0075] As is described in more detail below, the C channel **81** and the P channel **82** are synchronously tied together such that data on C channel **81** is transmitted over the CPS channel **80** while a corresponding P channel message is simultaneously transmitted.

[0076] S-Channel or Sideband Channel

[0077] The S channel **83** is a 32-bit wide channel which provides a separate communication path within the SOC **10**. The S channel **83** is used for management by CPU **52**, SOC **10** internal flow control, and SOC **10** intermodule messaging. The S channel **83** is a sideband channel of the CPS channel **80**, and is electrically and physically isolated from

the C channel **81** and the P channel **82**. It is important to note that since the S channel is separate and distinct from the C channel **81** and the P channel **82**, operation of the S channel **83** can continue without performance degradation related to the C channel **81** and P channel **82** operation. Conversely, since the C channel is not used for the transmission of system messages, but rather only data, there is no overhead associated with the C channel **81** and, thus, the C channel **81** is able to free-run as needed to handle incoming and outgoing packet information.

[**0078**] The S channel **83** of CPS channel **80** provides a system wide communication path for transmitting system messages, for example, providing the CPU **52** with access to the control structure of the SOC **10**. System messages include port status information, including port link status, receive port full, and port statistics, ARL table **22** synchronization, CPU **52** access to GBP **60** and CBP **50** memory buffers and SOC **10** control registers, and memory full notification corresponding to GBP **60** and/or CBP **50**.

[**0079**] **FIG. 6** illustrates a message format for an S channel message on S channel **83**. The message is formed of four 32-bit words; the bits of the fields of the words are defined as follows:

[**0080**] Opcode—6 bits long—Identifies the type of message present on the S channel;

[**0081**] Dest Port—6 bits long—Defines the port number to which the current S channel message is addressed;

[**0082**] Src Port—6 bits long—Defines the port number of which the current S channel message originated;

[**0083**] COS—3 bits long—Defines the class of service associated with the current S channel message; and

[**0084**] C bit—1 bit long—Logically defines whether the current S channel message is intended for the CPU **52**.

[**0085**] Error Code—2 bits long—Defines a valid error when the E bit is set;

[**0086**] DataLen—7 bits long—Defines the total number of data bytes in the Data field;

[**0087**] E bit—1 bit long—Logically indicates whether an error has occurred in the execution of the current command as defined by opcode;

[**0088**] Address—32 bits long—Defines the memory address associated with the current command as defined in opcode;

[**0089**] Data—0-127 bits long—Contains the data associated with the current opcode.

[**0090**] With the configuration of CPS channel **80** as explained above, the decoupling of the S channel from the C channel and the P channel is such that the bandwidth on the C channel can be preserved for cell transfer, and that overloading of the C channel does not affect communications on the sideband channel.

[**0091**] SOC Operation

[**0092**] The configuration of the SOC **10** supports fast ethernet ports, gigabit ports, and extendible interconnect links as discussed above. The SOC configuration can also be "stacked", thereby enabling significant port expansion capability. Once data packets have been received by SOC **10**, sliced into cells, and placed on CPS channel **80**, stacked SOC modules can interface with the CPS channel and monitor the channel, and extract appropriate information as necessary. As will be discussed below, a significant amount of concurrent lookups and filtering occurs as the packet comes in to ingress submodule **14** of an EPIC **20** or GPIC **30**, with respect to layer two and layer three lookups, and fast filtering.

[**0093**] Now referring to **FIGS. 8 and 9**, the handling of a data packet is described. For explanation purposes, ethernet data to be received will consider to arrive at one of the ports **24***a* of EPIC **20***a*. It will be presumed that the packet is intended to be transmitted to a user on one of ports **24***c* of EPIC **20***c*. All EPICs **20** (**20***a*, **20***b*, **20***c*, etc.) have similar features and functions, and each individually operate based on packet flow.

[**0094**] An input data packet **112** is applied to the port **24***a* is shown. The data packet **112** is, in this example, defined per the current standards for 10/100 Mbps Ethernet transmission and may have any length or structure as defined by that standard. This discussion will assume the length of the data packet **112** to be 1024 bits or 128 bytes.

[**0095**] When the data packet **112** is received by the EPIC module **20***a*, an ingress sub-module **14***a*, as an ingress function, determines the destination of the packet **112**. The first 64 bytes of the data packet **112** is buffered by the ingress sub-module **14***a* and compared to data stored in the lookup tables **21***a* to determine the destination port **24***c*. Also as an ingress function, the ingress sub-module **14***a* slices the data packet **112** into a number of 64-byte cells; in this case, the 128 byte packet is sliced in two 64 byte cells **112***a* and **112***b*. While the data packet **112** is shown in this example to be exactly two 64-byte cells **112***a* and **112***b*, an actual incoming data packet may include any number of cells, with at least one cell of a length less than 64 bytes. Padding bytes are used to fill the cell. In such cases the ingress sub-module **14***a* disregards the padding bytes within the cell. Further discussions of packet handling will refer to packet **112** and/or cells **112***a* and **112***b*.

[**0096**] It should be noted that each EPIC **20** (as well as each GPIC **30**) has an ingress submodule **14** and egress submodule **16**, which provide port specific ingress and egress functions. All incoming packet processing occurs in ingress submodule **14**, and features such as the fast filtering processor, layer two (L2) and layer three (L3) lookups, layer two learning, both selfinitiated and CPU **52** initiated, layer two table management, layer two switching, packet slicing, and channel dispatching occurs in ingress submodule **14**. After lookups, fast filter processing, and slicing into cells, as noted above and as will be discussed below, the packet is placed from ingress submodule **14** into dispatch unit **18**, and then placed onto CPS channel **80** and memory management is handled by PMMU **70**. A number of ingress buffers are provided in dispatch unit **18** to ensure proper handling of the packets/cells. Once the cells or cellularized packets are placed onto the CPS channel **80**, the ingress submodule is

finished with the packet. The ingress is not involved with dynamic memory allocation, or the specific path the cells will take toward the destination. Egress submodule **16**, illustrated in **FIG. 8** as submodule **16***a* of EPIC **20***a*, monitors CPS channel **80** and continuously looks for cells destined for a port of that particular EPIC **20**. When the PMMU **70** receives a signal that an egress associated with a destination of a packet in memory is ready to receive cells, PMMU **70** pulls the cells associated with the packet out of the memory, as will be discussed below, and places the cells on CPS channel **80**, destined for the appropriate egress submodule. A FIFO in the egress submodule **16** continuously sends a signal onto the CPS channel **80** that it is ready to receive packets, when there is room in the FIFO for packets or cells to be received. As noted previously, the CPS channel **80** is configured to handle cells, but cells of a particular packet are always handled together to avoid corrupting of packets.

[**0097**] In order to overcome data flow degradation problems associated with overhead usage of the C channel **81**, all L2 learning and L2 table management is achieved through the use of the S channel **83**. L2 self-initiated learning is achieved by deciphering the source address of a user at a given ingress port **24** utilizing the packet's associated address. Once the identity of the user at the ingress port **24** is determined, the ARL/L3 tables **21***a* are updated to reflect the user identification. The ARL/L3 tables **21** of each other EPIC **20** and GPIC **30** are updated to reflect the newly acquired user identification in a synchronizing step, as will be discussed below. As a result, while the ingress of EPIC **20***a* may determine that a given user is at a given port **24***a*, the egress of EPIC **20***b*, whose table **21***b* has been updated with the user's identification at port **24***a*, can then provide information to the User at port **24***a* without re-learning which port the user was connected.

[**0098**] Table management may also be achieved through the use of the CPU **52**. CPU **52**, via the CMIC **40**, can provide the SOC **10** with software functions which result in the designation of the identification of a user at a given port **24**. As discussed above, it is undesirable for the CPU **52** to access the packet information in its entirety since this would lead to performance degradation. Rather, the SOC **10** is programmed by the CPU **52** with identification information concerning the user. The SOC **10** can maintain real-time data flow since the table data communication between the CPU **52** and the SOC **10** occurs exclusively on the S channel **83**. While the SOC **10** can provide the CPU **52** with direct packet information via the C channel **81**, such a system setup is undesirable for the reasons set forth above. As stated above, as an ingress function an address resolution lookup is performed by examining the ARL table **21***a*. If the packet is addressed to one of the layer three (L3) switches of the SOC **10**, then the ingress sub-module **14***a* performs the L3 and default table lookup. Once the destination port has been determined, the EPIC **20***a* sets a ready flag in the dispatch unit **18***a* which then arbitrates for C channel **81**.

[**0099**] The C channel **81** arbitration scheme, as discussed previously and as illustrated in **FIGS. 4A and 4B**, is Demand Priority Round-Robin. Each I/O module, EPIC **20**, GPIC **30**, and CMIC **40**, along with the PMMU **70**, can initiate a request for C channel access. If no requests exist at any one given time, a default module established with a high priority gets complete access to the C channel **81**. If any one single I/O module or the PMMU **70** requests C channel **81** access, that single module gains access to the C channel **81** on-demand.

[**0100**] If EPIC modules **20***a*, **20***b*, **20***c*, and GPIC modules **30***a* and **30***b*, and CMIC **40** simultaneously request C channel access, then access is granted in round-robin fashion. For a given arbitration time period each of the I/O modules would be provided access to the C channel **81**. For example, each GPIC module **30***a* and **30***b* would be granted access, followed by the EPIC modules, and finally the CMIC **40**. After every arbitration time period the next I/O module with a valid request would be given access to the C channel **81**. This pattern would continue as long as each of the I/O modules provide an active C channel **81** access request.

[**0101**] If all the I/O modules, including the PMMU **70**, request C channel **81** access, the PMMU **70** is granted access as shown in **FIG. 4B** since the PMMU provides a critical data path for all modules on the switch. Upon gaining access to the channel **81**, the dispatch unit **18***a* proceeds in passing the received packet **112**, one cell at a time, to C channel **81**.

[**0102**] Referring again to **FIG. 3**, the individual C, P, and S channels of the CPS channel **80** are shown. Once the dispatch unit **18***a* has been given permission to access the CPS channel **80**, during the first time period Cn**0**, the dispatch unit **18***a* places the first 16 bytes of the first cell **112***a* of the received packet **112** on the C channel **81**. Concurrently, the dispatch unit **18***a* places the first P channel message corresponding to the currently transmitted cell. As stated above, the first P channel message defines, among other things, the message type. Therefore, this example is such that the first P channel message would define the current cell as being a unicast type message to be directed to the destination egress port **21***c*.

[**0103**] During the second clock cycle Cn**1**, the second 16 bytes (16:31) of the currently transmitted data cell **112***a* are placed on the C channel **81**. Likewise, during the second clock cycle Cnl, the B/cMc Port Bitmap is placed on the P channel **82**.

[**0104**] As indicated by the hatching of the S channel **83** data during the time periods Cn**0** to Cn**3** in **FIG. 3**, the operation of the S channel **83** is decoupled from the operation of the C channel **81** and the P channel **82**. For example, the CPU **52**, via the CMIC **40**, can pass system level messages to non-active modules while an active module passes cells on the C channel **81**. As previously stated, this is an important aspect of the SOC **10** since the S channel operation allows parallel task processing, permitting the transmission of cell data on the C channel **81** in real-time. Once the first cell **112***a* of the incoming packet **112** is placed on the CPS channel **80** the PMMU **70** determines whether the cell is to be transmitted to an egress port **21** local to the SOC **10**.

[**0105**] If the PMMU **70** determines that the current cell **112***a* on the C channel **81** is destined for an egress port of the SOC **10**, the PMMU **70** takes control of the cell data flow.

[**0106**] **FIG. 10** illustrates, in more detail, the functional egress aspects of PMMU **70**. PMMU **70** includes CBM **71**, and interfaces between the GBP, CBP and a plurality of egress managers (EgM) **76** of egress submodule **18**, with one egress manager **76** being provided for each egress port. CBM **71** is connected to each egress manager **76**, in a

parallel configuration, via R channel data bus **77**. R channel data bus **77** is a 32-bit wide bus used by CBM **71** and egress managers **76** in the transmission of memory pointers and system messages. Each egress manager **76** is also connected to CPS channel **80**, for the transfer of data cells **112***a* and **112***b*.

[**0107**] CBM **71**, in summary, performs the functions of on-chip FAP (free address pool) management, transfer of cells to CBP **50**, packet assembly and notification to the respective egress managers, rerouting of packets to GBP **60** via a global buffer manager, as well as handling packet flow from the GBP **60** to CBP **50**. Memory clean up, memory budget management, channel interface, and cell pointer assignment are also functions of CBM **71**. With respect to the free address pool, CBM **71** manages the free address pool and assigns free cell pointers to incoming cells. The free address pool is also written back by CBM **71**, such that the released cell pointers from various egress managers **76** are appropriately cleared. Assuming that there is enough space available in CBP **50**, and enough free address pointers available, CBM **71** maintains at least two cell pointers per egress manager **76** which is being managed. The first cell of a packet arrives at an egress manager **76**, and CBM **71** writes this cell to the CBM memory allocation at the address pointed to by the first pointer. In the next cell header field, the second pointer is written. The format of the cell as stored in CBP **50** is shown in **FIG. 11**; each line is 18 bytes wide. Line **0** contains appropriate information with respect to first cell and last cell information, broadcast/multicast, number of egress ports for broadcast or multicast, cell length regarding the number of valid bytes in the cell, the next cell pointer, total cell count in the packet, and time stamp. The remaining lines contain cell data as 64 byte cells. The free address pool within PMMU **70** stores all free pointers for CBP **50**. Each pointer in the free address pool points to a 64-byte cell in CBP **50**; the actual cell stored in the CBP is a total of 72 bytes, with 64 bytes being byte data, and 8 bytes of control information. Functions such as HOL blocking high and low watermarks, out queue budget registers, CPID assignment, and other functions are handled in CBM **71**, as explained herein.

[**0108**] When PMMU **70** determines that cell **112***a* is destined for an appropriate egress port on SOC **10**, PMMU **70** controls the cell flow from CPS channel **80** to CBP **50**. As the data packet **112** is received at PMMU **70** from CPS **80**, CBM **71** determines whether or not sufficient memory is available in CBP **50** for the data packet **112**. A free address pool (not shown) can provide storage for at least two cell pointers per egress manager **76**, per class of service. If sufficient memory is available in CBP **50** for storage and identification of the incoming data packet, CBM **71** places the data cell information on CPS channel **80**. The data cell information is provided by CBM **71** to CBP **50** at the assigned address. As new cells are received by PMMU **70**, CBM **71** assigns cell pointers. The initial pointer for the first cell **112***a* points to the egress manager **76** which corresponds to the egress port to which the data packet **112** will be sent after it is placed in memory. In the example of **FIG. 8**, packets come in to port **24***a* of EPIC **20***a*, and are destined for port **24***c* of EPIC **20***c*. For each additional cell **112***b*, CBM **71** assigns a corresponding pointer. This corresponding cell pointer is stored as a two byte or 16 bit value NC_header, in an appropriate place on a control message, with the initial pointer to the corresponding egress manager **76**, and successive cell pointers as part of each cell header, a linked list of memory pointers is formed which defines packet **112** when the packet is transmitted via the appropriate egress port, in this case **24***c*. Once the packet is fully written into CBP **50**, a corresponding CBP Packet Identifier (CPID) is provided to the appropriate egress manager **76**; this CPID points to the memory location of initial cell **12***a*. The CPID for the data packet is then used when the data packet **112** is sent to the destination egress port **24***c*. In actuality, the CBM **71** maintains two buffers containing a CBP cell pointer, with admission to the CBP being based upon a number of factors. An example of admission logic for CBP **50** will be discussed below with reference to **FIG. 12**.

[**0109**] Since CBM **71** controls data flow within SOC **10**, the data flow associated with any ingress port can likewise be controlled. When packet **112** has been received and stored in CBP **50**, a CPID is provided to the associated egress manager **76**. The total number of data cells associated with the data packet is stored in a budget register (not shown). As more data packets **112** are received and designated to be sent to the same egress manager **76**, the value of the budget register corresponding to the associated egress manager **76** is incremented by the number of data cells **112***a*, **112***b* of the new data cells received. The budget register therefore dynamically represents the total number of cells designated to be sent by any specific egress port on an EPIC **20**. CBM **71** controls the inflow of additional data packets by comparing the budget register to a high watermark register value or a low watermark register value, for the same egress.

[**0110**] When the value of the budget register exceeds the high watermark value, the associated ingress port is disabled. Similarly, when data cells of an egress manager **76** are sent via the egress port, and the corresponding budget register decreases to a value below the low watermark value, the ingress port is once again enabled. When egress manager **76** initiates the transmission of packet **112**, egress manager **76** notifies CBM **71**, which then decrements the budget register value by the number of data cells which are transmitted. The specific high watermark values and low watermark values can be programmed by the user via CPU **52**. This gives the user control over the data flow of any port on any EPIC **20** or GPIC **30**.

[**0111**] Egress manager **76** is also capable of controlling data flow. Each egress manager **76** is provided with the capability to keep track of packet identification information in a packet pointer budget register; as a new pointer is received by egress manager **76**, the associated packet pointer budget register is incremented. As egress manager **76** sends out a data packet **112**, the packet pointer budget register is decremented. When a storage limit assigned to the register is reached, corresponding to a full packet identification pool, a notification message is sent to all ingress ports of the SOC **10**, indicating that the destination egress port controlled by that egress manager **76** is unavailable. When the packet pointer budget register is decremented below the packet pool high watermark value, a notification message is sent that the destination egress port is now available. The notification messages are sent by CBM **71** on the S channel **83**.

[**0112**] As noted previously, flow control may be provided by CBM **71**, and also by ingress submodule **14** of either an EPIC **20** or GPIC **30**. Ingress submodule **14** monitors cell transmission into ingress port **24**. When a data packet **112** is

received at an ingress port **24**, the ingress submodule **14** increments a received budget register by the cell count of the incoming data packet. When a data packet **112** is sent, the corresponding ingress **14** decrements the received budget register by the cell count of the outgoing data packet **112**. The budget register **72** is decremented by ingress **14** in response to a decrement cell count message initiated by CBM **71**, when a data packet **112** is successfully transmitted from CBP **50**.

[**0113**] Efficient handling of the CBP and GBP is necessary in order to maximize throughput, to prevent port starvation, and to prevent port underrun. For every ingress, there is a low watermark and a high watermark; if cell count is below the low watermark, the packet is admitted to the CBP, thereby preventing port starvation by giving the port an appropriate share of CBP space.

[**0114**] **FIG. 12** generally illustrates the handling of a data packet **112** when it is received at an appropriate ingress port. This figure illustrates dynamic memory allocation on a single port, and is applicable for each ingress port. In step **12-1**, packet length is estimated by estimating cell count based upon egress manager count plus incoming cell count. After this cell count is estimated, the GBP current cell count is checked at step **12-2** to determine whether or not the GBP **60** is empty. If the GBP cell count is 0, indicating that GBP **60** is empty, the method proceeds to step **12-3**, where it is determined whether or not the estimated cell count from step **12-1** is less than the admission low watermark. The admission low watermark value enables the reception of new packets **112** into CBP **50** if the total number of cells in the associated egress is below the admission low watermark value. If yes, therefore, the packet is admitted at step **12-5**. If the estimated cell count is not below the admission low watermark, CBM **71** then arbitrates for CBP memory allocation with other ingress ports of other EPICs and GPICs, in step **12-4**. If the arbitration is unsuccessful, the incoming packet is sent to a reroute process, referred to as A. If the arbitration is successful, then the packet is admitted to the CBP at step **12-5**. Admission to the CBP is necessary for linespeed communication to occur.

[**0115**] The above discussion is directed to a situation wherein the GBP cell count is determined to be 0. If in step **12-2** the GBP cell count is determined not to be 0, then the method proceeds to step **12-6**, where the estimated cell count determined in step **12-1** is compared to the admission high watermark. If the answer is no, the packet is rerouted to GBP **60** at step **12-7**. If the answer is yes, the estimated cell count is then compared to the admission low watermark at step **12-8**. If the answer is no, which means that the estimated cell count is between the high watermark and the low watermark, then the packet is rerouted to GBP **60** at step **12-7**. If the estimated cell count is below the admission low watermark, the GBP current count is compared with a reroute cell limit value at step **12-9**. This reroute cell limit value is user programmable through CPU **52**. If the GBP count is below or equal to the reroute cell limit value at step **12-9**, the estimated cell count and GBP count are compared with an estimated cell count low watermark; if the combination of estimated cell count and GBP count are less than the estimated cell count low watermark, the packet is admitted to the CBP. If the sum is greater than the estimated cell count low watermark, then the packet is rerouted to GBP **60** at step **12-7**. After rerouting to GBP **60**, the GBP cell count is updated, and the packet processing is finished. It should be noted that if both the CBP and the GBP are full, the packet is dropped. Dropped packets are handled in accordance with known ethernet or network communication procedures, and have the effect of delaying communication. However, this configuration applies appropriate back pressure by setting watermarks, through CPU **52**, to appropriate buffer values on a per port basis to maximize memory utilization. This CBP/GBP admission logic results in a distributed hierarchical shared memory configuration, with a hierarchy between CBP **50** and GBP **60**, and hierarchies within the CBP.

[**0116**] Address Resolution (L2)+(L3)

[**0117**] **FIG. 14** illustrates some of the concurrent filtering and look-up details of a packet coming into the ingress side of an EPIC **20**. **FIG. 12**, as discussed previously, illustrates the handling of a data packet with respect to admission into the distributed hierarchical shared memory. **FIG. 14** addresses the application of filtering, address resolution, and rules application segments of SOC **10**. These functions are performed simultaneously with respect to the CBP admission discussed above. As shown in the figure, packet **112** is received at input port **24** of EPIC **20**. It is then directed to input FIFO **142**. As soon as the first sixteen bytes of the packet arrive in the input FIFO **142**, an address resolution request is sent to ARL engine **143**; this initiates lookup in ARL/L3 tables **21**.

[**0118**] A description of the fields of an ARL table of ARL/L3 tables **21** is as follows:

[**0119**] Mac Address—48 bits long—Mac Address;

[**0120**] VLAN tag—12 bits long—VLAN Tag Identifier as described in IEEE 802.1q standard for tagged packets. For an untagged Packet, this value is picked up from Port Based VLAN Table.

[**0121**] CosDst—3 bits long—Class of Service based on the Destination Address. COS identifies the priority of this packet. 8 levels of priorities as described in IEEE 802.1p standard.

[**0122**] Port Number—6 bits long—Port Number is the port on which this Mac address is learned.

[**0123**] SD_Disc Bits—2 bits long—These bits identifies whether the packet should be discarded based on Source Address or Destination Address. Value 1 means discard on source. Value 2 means discard on destination.

[**0124**] C bit—1 bit long—C Bit identifies that the packet should be given to CPU Port.

[**0125**] St Bit—1 bit long—St Bit identifies that this is a static entry (it is not learned Dynamically) and that means is should not be aged out. Only CPU **52** can delete this entry.

[**0126**] Ht Bit—1 bit long—Hit Bit-This bit is set if there is match with the Source Address. It is used in the aging Mechanism.

[**0127**] CosSrc—3 bits long—Class of Service based on the Source Address. COS identifies the priority of this packet.

[**0128**] L3 Bit—1 bit long—L3 Bit—identifies that this entry is created as result of L3 Interface Con-

figuration. The Mac address in this entry is L3 interface Mac Address and that any Packet addresses to this Mac Address need to be routed.

[0129] T Bit—1 bit long—T Bit identifies that this Mac address is learned from one of the Trunk Ports. If there is a match on Destination address then output port is not decided on the Port Number in this entry, but is decided by the Trunk Identification Process based on the rules identified by the RTAG bits and the Trunk group Identified by the TGID.

[0130] TGID—3 bits long—TGID identifies the Trunk Group if the T Bit is set.

[0131] SOC **10** supports 6 Trunk Groups per switch.

[0132] RTAG—3 bits long—RTAG identifies the Trunk selection criterion if the destination address matches this entry and the T bit is set in that entry.

[0133] Value 1—based on Source Mac Address. Value 2—based on Destination Mac Address. Value 3—based on Source & destination Address. Value 4—based on Source IP Address. Value 5—based on Destination IP Address. Value 6—based on Source and Destination IP Address.

[0134] S C P—1 bit long—Source CoS Priority Bit—If this bit is set (in the matched Source Mac Entry) then Source CoS has priority over Destination Cos.

[0135] It should also be noted that VLAN tables **23** include a number of table formats; all of the tables and table formats will not be discussed here. However, as an example, the port based VLAN table fields are described as follows:

[0136] Port VLAN Id—12 bits long—Port VLAN Identifier is the VLAN Id used by Port Based VLAN.

[0137] Sp State—2 bits long—This field identifies the current Spanning Tree State. Value 0×00—Port is in Disable State. No packets are accepted in this state, not even BPDUs. Value 0×01—Port is in Blocking or Listening State. In this state no packets are accepted by the port, except BPDUs. Value 0×02—Port is in Learning State. In this state the packets are not forwarded to another Port but are accepted for learning. Value 0×03—Port is in Forwarding State. In this state the packets are accepted both for learning and forwarding.

[0138] Port Discard Bits—6 bits long—There are 6 bits in this field and each bit identifies the criterion to discard the packets coming in this port. Note: Bits **0** to **3** are not used. Bit **4**—If this bit is set then all the frames coming on this port will be discarded. Bit **5**—If this bit is set then any 802.1q Priority Tagged (vid=0) and Untagged frame coming on this port will be discarded.

[0139] J Bit—1 bit long—J Bit means Jumbo bit. If this bit is set then this port should accept Jumbo Frames.

[0140] RTAG—3 bits long—RTAG identifies the Trunk selection criterion if the destination address matches this entry and the T bit is set in that entry. Value 1—based on Source Mac Address. Value 2—based on Destination Mac Address. Value 3—based on Source & destination Address. Value 4—based on Source IP Address. Value 5—based on Destination IP Address. Value 6—based on Source and Destination IP Address.

[0141] T Bit—1 bit long—This bit identifies that the Port is a member of the Trunk Group.

[0142] C Learn Bit—1 bit long—Cpu Learn Bit—If this bit is set then the packet is send to the CPU whenever the source Address is learned.

[0143] PT—2 bits long—Port Type identifies the port Type. Value 0-10 Mbit Port. Value 1-100 Mbit Port. Value 2-1 Gbit Port. Value 3-CPU Port.

[0144] VLAN Port Bitmap—28 bits long—VLAN Port Bitmap Identifies all the egress ports on which the packet should go out.

[0145] B Bit—1 bit long—B bit is BPDU bit. If this bit is set then the Port rejects BPDUs. This Bit is set for Trunk Ports which are not supposed to accept BPDUs.

[0146] TGID—3 bits long—TGID—this field identifies the Trunk Group which this port belongs to.

[0147] Untagged Bitmap—28 bits long—This bitmap identifies the Untagged Members of the VLAN. i.e. if the frame destined out of these members ports should be transmitted without Tag Header.

[0148] M Bits—1 bit long—M Bit is used for Mirroring Functionality. If this bit is set then mirroring on Ingress is enabled.

[0149] The ARL engine **143** reads the packet; if the packet has a VLAN tag according to IEEE Standard 802.1q, then ARL engine **143** performs a look-up based upon tagged VLAN table **231**, which is part of VLAN table **23**. If the packet does not contain this tag, then the ARL engine performs VLAN lookup based upon the port based VLAN table **232**. Once the VLAN is identified for the incoming packet, ARL engine **143** performs an ARL table search based upon the source MAC address and the destination MAC address. If the results of the destination search is an L3 interface MAC address, then an L3 search is performed of an L3 table within ARL/L3 table **21**. If the L3 search is successful, then the packet is modified according to packet routing rules.

[0150] To better understand lookups, learning, and switching, it may be advisable to once again discuss the handling of packet **112** with respect to **FIG. 8**. If data packet **112** is sent from a source station A into port **24***a* of EPIC **20***a*, and destined for a destination station B on port **24***c* of EPIC **20***c*, ingress submodule **14***a* slices data packet **112** into cells **112***a* and **112***b*. The ingress submodule then reads the packet to determine the source MAC address and the destination MAC address. As discussed previously, ingress submodule **14***a*, in particular ARL engine **143**, performs the lookup of appropriate tables within ARL/L3 tables **21***a*, and VLAN table **23***a*, to see if the destination MAC address exists in ARL/L3 tables **21***a*; if the address is not found, but if the VLAN IDs are the same for the source and destination, then ingress submodule **14***a* will set the packet to be sent to all ports. The packet will then propagate to the appropriate destination address. A "source search" and a "destination

search" occurs in parallel. Concurrently, the source MAC address of the incoming packet is "learned", and therefore added to an ARL table within ARL/L3 table **21***a*. After the packet is received by the destination, an acknowledgement is sent by destination station B to source station A. Since the source MAC address of the incoming packet is learned by the appropriate table of B, the acknowledgement is appropriately sent to the port on which A is located. When the acknowledgement is received at port **24***a*, therefore, the ARL table learns the source MAC address of B from the acknowledgement packet. It should be noted that as long as the VLAN IDs (for tagged packets) of source MAC addresses and destination MAC addresses are the same, layer two switching as discussed above is performed. L2 switching and lookup is therefore based on the first 16 bytes of an incoming packet. For untagged packets, the port number field in the packet is indexed to the port-based VLAN table within VLAN table **23***a*, and the VLAN ID can then be determined. If the VLAN IDs are different, however, L3 switching is necessary wherein the packets are sent to a different VLAN. L3 switching, however, is based on the IP header field of the packet. The IP header includes source IP address, destination IP address, and TTL (time-tolive).

[**0151**] In order to more clearly understand layer three switching according to the invention, data packet **112** is sent from source station A onto port **24***a* of EPIC **20***a*, and is directed to destination station B; assume, however, that station B is disposed on a different VLAN, as evidenced by the source MAC address and the destination MAC address having differing VLAN IDs. The lookup for B would be unsuccessful since B is located on a different VLAN, and merely sending the packet to all ports on the VLAN would result in B never receiving the packet. Layer three switching, therefore, enables the bridging of VLAN boundaries, but requires reading of more packet information than just the MAC addresses of L2 switching. In addition to reading the source and destination MAC addresses, therefore, ingress **14***a* also reads the IP address of the source and destination. As noted previously, packet types are defined by IEEE and other standards, and are known in the art. By reading the IP address of the destination, SOC **10** is able to target the packet to an appropriate router interface which is consistent with the destination IP address. Packet **112** is therefore sent on to CPS channel **80** through dispatch unit **18***a*, destined for an appropriate router interface (not shown, and not part of SOC **10**), upon which destination B is located. Control frames, identified as such by their destination address, are sent to CPU **52** via CMIC **40**. The destination MAC address, therefore, is the router MAC address for B. The router MAC address is learned through the assistance of CPU **52**, which uses an ARP (address resolution protocol) request to request the destination MAC address for the router for B, based upon the IP address of B. Through the use of the IP address, therefore, SOC **10** can learn the MAC address. Through the acknowledgement and learning process, however, it is only the first packet that is subject to this "slow" handling because of the involvement of CPU **52**. After the appropriate MAC addresses are learned, linespeed switching can occur through the use of concurrent table lookups since the necessary information will be learned by the tables. Implementing the tables in silicon as two-dimensional arrays enables such rapid concurrent lookups. Once the MAC address for B has been learned, therefore, when packets come in with the IP address for B, ingress **14***a* changes the IP address to the destination MAC address, in order to enable linespeed switching. Also, the source address of the incoming packet is changed to the router MAC address for A rather than the IP address for A, so that the acknowledgement from B to A can be handled in a fast manner without needing to utilize a CPU on the destination end in order to identify the source MAC address to be the destination for the acknowledgement. Additionally, a TTL (time-to-live) field in the packet is appropriately manipulated in accordance with the IETF (Internet Engineering Task Force) standard. A unique aspect of SOC **10** is that all of the switching, packet processing, and table lookups are performed in hardware, rather than requiring CPU **52** or another CPU to spend time processing instructions. It should be noted that the layer three tables for EPIC **20** can have varying sizes; in a preferred embodiment, these tables are capable of holding up to 2000 addresses, and are subject to purging and deletion of aged addresses, as explained herein.

[**0152**] Referring again to the discussion of **FIG. 14**, as soon as the first **64** (sixty four) bytes of the packet arrive in input FIFO **142**, a filtering request is sent to FFP **141**. FFP **141** is an extensive filtering mechanism which enables SOC **10** to set inclusive and exclusive filters on any field of a packet from layer **2** to layer **7** of the OSI seven layer model. Filters are used for packet classification based upon a protocol fields in the packets. Various actions are taken based upon the packet classification, including packet discard, sending of the packet to the CPU, sending of the packet to other ports, sending the packet on certain COS priority queues, changing the type of service (TOS) precedence. The exclusive filter is primarily used for implementing security features, and allows a packet to proceed only if there is a filter match. If there is no match, the packet is discarded.

[**0153**] It should be noted that SOC **10** has a unique capability to handle both tagged and untagged packets coming in. Tagged packets are tagged in accordance with IEEE standards, and include a specific IEEE 802.1p priority field for the packet. Untagged packets, however, do not include an 802.1p priority field therein. SOC **10** can assign an appropriate COS value for the packet, which can be considered to be equivalent to a weighted priority, based either upon the destination address or the source address of the packet, as matched in one of the table lookups. As noted in the ARL table format discussed herein, an SCP (Source COS Priority) bit is contained as one of the fields of the table. When this SCP bit is set, then SOC **10** will assign weighted priority based upon a source COS value in the ARL table. If the SCP is not set, then SOC **10** will assign a COS for the packet based upon the destination COS field in the ARL table. These COS of values are three bit fields in the ARL table, as noted previously in the ARL table field descriptions.

[**0154**] FFP **141** is essentially a state machine driven programmable rules engine. The filters used by the FFP are 64 (sixty-four) bytes wide, and are applied on an incoming packet; any offset can be used, however, a preferred embodiment uses an offset of zero, and therefore operates on the first 64 bytes, or 512 bits, of a packet. The actions taken by the filter are tag insertion, priority mapping, TOS tag insertion, sending of the packet to the CPU, dropping of the packet, forwarding of the packet to an egress port, and sending the packet to a mirrored port. The filters utilized by FFP **141** are defined by rules table **22**. Rules table **22** is

completely programmable by CPU **52**, through CMIC **40**. The rules table can be, for example, 256 entries deep, and may be partitioned for inclusive and exclusive filters, with, again as an example, 128 entries for inclusive filters and 128 entries for exclusive filters. A filter database, within FFP **141**, includes a number of inclusive mask registers and exclusive mask registers, such that the filters are formed based upon the rules in rules table **22**, and the filters therefore essentially form a 64 byte wide mask or bit map which is applied on the incoming packet. If the filter is designated as an exclusive filter, the filter will exclude all packets unless there is a match. In other words, the exclusive filter allows a packet to go through the forwarding process only if there is a filter match. If there is no filter match, the packet is dropped. In an inclusive filter, if there is no match, no action is taken but the packet is not dropped. Action on an exclusive filter requires an exact match of all filter fields. If there is an exact match with an exclusive filter, therefore, action is taken as specified in the action field; the actions which may be taken, are discussed above. If there is no full match or exact of all of the filter fields, but there is a partial match, then the packet is dropped. A partial match is defined as either a match on the ingress field, egress field, or filter select fields. If there is neither a full match nor a partial match with the packet and the exclusive filter, then no action is taken and the packet proceeds through the forwarding process. The FFP configuration, taking action based upon the first 64 bytes of a packet, enhances the handling of real time traffic since packets can be filtered and action can be taken on the fly. Without an FFP according to the invention, the packet would need to be transferred to the CPU for appropriate action to be interpreted and taken. For inclusive filters, if there is a filter match, action is taken, and if there is no filter match, no action is taken; however, packets are not dropped based on a match or no match situation for inclusive filters.

[**0155**] In summary, the FFP includes a filter database with eight sets of inclusive filters and eight sets of exclusive filters, as separate filter masks. As a packet comes into the FFP, the filter masks are applied to the packet; in other words, a logical AND operation is performed with the mask and the packet. If there is a match, the matching entries are applied to rules tables **22**, in order to determine which specific actions will be taken. As mentioned previously, the actions include 802.1p tag insertion, 802.1p priority mapping, IP TOS (type-of-service) tag insertion, sending of the packet to the CPU, discarding or dropping of the packet, forwarding the packet to an egress port, and sending the packet to the mirrored port. Since there are a limited number of fields in the rules table, and since particular rules must be applied for various types of packets, the rules table requirements are minimized in the present invention by the present invention setting all incoming packets to be "tagged" packets; all untagged packets, therefore, are subject to 802.1p tag insertion, in order to reduce the number of entries which are necessary in the rules table. This action eliminates the need for entries regarding handling of untagged packets. It should be noted that specific packet types are defined by various IEEE and other networking standards, and will not be defined herein.

[**0156**] As noted previously, exclusive filters are defined in the rules table as filters which exclude packets for which there is no match; excluded packets are dropped. With inclusive filters, however, packets are not dropped in any circumstances. If there is a match, action is taken as discussed above; if there is no match, no action is taken and the packet proceeds through the forwarding process. Referring to **FIG. 15**, FFP **141** is shown to include filter database **1410** containing filter masks therein, communicating with logic circuitry **1411** for determining packet types and applying appropriate filter masks. After the filter mask is applied as noted above, the result of the application is applied to rules table **22**, for appropriate lookup and action. It should be noted that the filter masks, rules tables, and logic, while programmable by CPU **52**, do not rely upon CPU **52** for the processing and calculation thereof. After programming, a hardware configuration is provided which enables linespeed filter application and lookup.

[**0157**] Referring once again to **FIG. 14**, after FFP **141** applies appropriate configured filters and results are obtained from the appropriate rules table **22**, logic **1411** in FFP **141** determines and takes the appropriate action. The filtering logic can discard the packet, send the packet to the CPU **52**, modify the packet header or IP header, and recalculate any IP checksum fields or takes other appropriate action with respect to the headers. The modification occurs at buffer slicer **144**, and the packet is placed on C channel **81**. The control message and message header information is applied by the FFP **141** and ARL engine **143**, and the message header is placed on P channel **82**. Dispatch unit **18**, also generally discussed with respect to **FIG. 8**, coordinates all dispatches to C channel, P channel and S channel. As noted previously, each EPIC module **20**, GPIC module **30**, PMMU **70**, etc. are individually configured to communicate via the CPS channel. Each module can be independently modified, and as long as the CPS channel interfaces are maintained, internal modifications to any modules such as EPIC **20***a* should not affect any other modules such as EPIC **20***b*, or any GPICs **30**.

[**0158**] As mentioned previously, FFP **141** is programmed by the user, through CPU **52**, based upon the specific functions which are sought to be handled by each FFP **141**. Referring to **FIG. 17**, it can be seen that in step **17-1**, an FFP programming step is initiated by the user. Once programming has been initiated, the user identifies the protocol fields of the packet which are to be of interest for the filter, in step **17-2**. In step **17-3**, the packet type and filter conditions are determined, and in step **17-4**, a filter mask is constructed based upon the identified packet type, and the desired filter conditions. The filter mask is essentially a bit map which is applied or ANDed with selected fields of the packet. After the filter mask is constructed, it is then determined whether the filter will be an inclusive or exclusive filter, depending upon the problems which are sought to be solved, the packets which are sought to be forwarded, actions sought to be taken, etc. In step **17-6**, it is determined whether or not the filter is on the ingress port, and in step **17-7**, it is determined whether or not the filter is on the egress port. If the filter is on the ingress port, an ingress port mask is used in step **17-8**. If it is determined that the filter will be on the egress port, then an egress mask is used in step **17-9**. Based upon these steps, a rules table entry for rules tables **22** is then constructed, and the entry or entries are placed into the appropriate rules table (steps **17-10** and **17-11**). These steps are taken through the user inputting particular sets of rules and information into CPU **52** by an appropriate input device, and CPU **52** taking the appropriate action with respect to

creating the filters, through CMIC **40** and the appropriate ingress or egress submodules on an appropriate EPIC module **20** or GPIC module **30**.

[**0159**] It should also be noted that the block diagram of SOC **10** in **FIG. 2** illustrates each GPIC **30** having its own ARL/L3 tables **31**, rules table **32**, and VLAN tables **33**, and also each EPIC **20** also having its own ARL/L3 tables **21**, rules table **22**, and VLAN tables **23**. In a preferred embodiment of the invention, however, two separate modules can share a common ARL/L3 table and a common VLAN table. Each module, however, has its own rules table **22**. For example, therefore, GPIC **30***a* may share ARL/L3 table **21***a* and VLAN table **23***a* with EPIC **20***a*. Similarly, GPIC **30***b* may share ARL table **21***b* and VLAN table **23***b* with EPIC **20***b*. This sharing of tables reduces the number of gates which are required to implement the invention, and makes for simplified lookup and synchronization as will be discussed below.

[**0160**] Table Synchronization and Aging

[**0161**] SOC **10** utilizes a unique method of table synchronization and aging, to ensure that only current and active address information is maintained in the tables. When ARL/L3 tables are updated to include a new source address, a "hit bit" is set within the table of the "owner" or obtaining module to indicate that the address has been accessed. Also, when a new address is learned and placed in the ARL table, an S channel message is placed on S channel **83** as an ARL insert message, instructing all ARL/L3 tables on SOC **10** to learn this new address. The entry in the ARL/L3 tables includes an identification of the port which initially received the packet and learned the address. Therefore, if EPIC **20***a* contains the port which initially received the packet and therefore which initially learned the address, EPIC **20***a* becomes the "owner" of the address. Only EPIC **20***a*, therefore, can delete this address from the table. The ARL insert message is received by all of the modules, and the address is added into all of the ARL/L3 tables on SOC **10**. CMIC **40** will also send the address information to CPU **52**. When each module receives and learns the address information, an acknowledge or ACK message is sent back to EPIC **20***a*; as the owner further ARL insert messages cannot be sent from EPIC **20***a* until all ACK messages have been received from all of the modules. In a preferred embodiment of the invention, CMIC **40** does not send an ACK message, since CMIC **40** does not include ingress/egress modules thereupon, but only communicates with CPU **52**. If multiple SOC **10** are provided in a stacked configuration, all ARL/L3 tables would be synchronized due to the fact that CPS channel **80** would be shared throughout the stacked modules.

[**0162**] Referring to **FIG. 18**, the ARL aging process is discussed. An age timer is provided within each EPIC module **20** and GPIC module **30**, at step **18-1**, it is determined whether the age timer has expired. If the timer has expired, the aging process begins by examining the first entry in ARL table **21**. At step **18-2**, it is determined whether or not the port referred to in the ARL entry belongs to the particular module. If the answer is no, the process proceeds to step **18-3**, where it is determined whether or not this entry is the last entry in the table. If the answer is yes at step **18-3**, the age timer is restarted and the process is completed at step **184**. If this is not the last entry in the table, then the process is returned to the next ARL entry at step **18-5**. If, however, at step **18-2** it is determined that the port does belong to this particular module, then, at step **18-6** it is determined whether or not the hit bit is set, or if this is a static entry. If the hit bit is set, the hit bit is reset at step **18-7**, and the method then proceeds to step **18-3**. If the hit bit is not set, the ARL entry is deleted at step **18-8**, and a delete ARL entry message is sent on the CPS channel to the other modules, including CMIC **40**, so that the table can be appropriately synchronized as noted above. This aging process can be performed on the ARL (layer two) entries, as well as layer three entries, in order to ensure that aged packets are appropriately deleted from the tables by the owners of the entries. As noted previously, the aging process is only performed on entries where the port referred to belongs to the particular module which is performing the aging process. To this end, therefore, the hit bit is only set in the owner module. The hit bit is not set for entries in tables of other modules which receive the ARL insert message. The hit bit is therefore always set to zero in the synchronized non-owner tables.

[**0163**] The purpose of the source and destination searches, and the overall lookups, is to identify the port number within SOC **10** to which the packet should be directed to after it is placed either CBP **50** or GBP **60**. Of course, a source lookup failure results in learning of the source from the source MAC address information in the packet; a destination lookup failure, however, since no port would be identified, results in the packet being sent to all ports on SOC **10**. As long as the destination VLAN ID is the same as the source VLAN ID, the packet will propagate the VLAN and reach the ultimate destination, at which point an acknowledgement packet will be received, thereby enabling the ARL table to learn the destination port for use on subsequent packets. If the VLAN IDs are different, an L3 lookup and learning process will be performed, as discussed previously. It should be noted that each EPIC and each GPIC contains a FIFO queue to store ARL insert messages, since, although each module can only send one message at a time, if each module sends an insert message, a queue must be provided for appropriate handling of the messages.

[**0164**] Port Movement

[**0165**] After the ARL/L3 tables have entries in them, the situation sometimes arises where a particular user or station may change location from one port to another port. In order to prevent transmission errors, therefore, SOC **10** includes capabilities of identifying such movement, and updating the table entries appropriately. For example, if station A, located for example on port **1**, seeks to communicate with station B, whose entries indicate that user B is located on port **26**. If station B is then moved to a different port, for example, port **15**, a destination lookup failure will occur and the packet will be sent to all ports. When the packet is received by station B at port **15**, station B will send an acknowledge (ACK) message, which will be received by the ingress of the EPIC/GPIC module containing port **1** thereupon. A source lookup (of the acknowledge message) will yield a match on the source address, but the port information will not match. The EPIC/GPIC which receives the packet from B, therefore, must delete the old entry from the ARL/L3 table, and also send an ARL/L3 delete message onto the S channel so that all tables are synchronized. Then, the new source information, with the correct port, is inserted into the ARL/L3 table, and an ARL/L3 insert message is placed on

the S channel, thereby synchronizing the ARL/L3 tables with the new information. The updated ARL insert message cannot be sent until all of the acknowledgement messages are sent regarding the ARL delete message, to ensure proper table synchronization. As stated previously, typical ARL insertion and deletion commands can only be initiated by the owner module. In the case of port movement, however, since port movement may be identified by any module sending a packet to a moved port, the port movement-related deletion and insertion messages can be initiated by any module.

[**0166**] Trunking

[**0167**] During the configuration process wherein a local area network is configured by an administrator with a plurality of switches, etc., numerous ports can be "trunked" to increase bandwidth. For example, if traffic between a first switch SW**1** and a second switch SW**2** is anticipated as being high, the LAN can be configured such that a plurality of ports, for example ports **1** and **2**, can be connected together. In a 100 megabits per second environment, the trunking of two ports effectively provides an increased bandwidth of 200 megabits per second between the two ports. The two ports **1** and **2**, are therefore identified as a trunk group, and CPU **52** is used to properly configure the handling of the trunk group. Once a trunk group is identified, it is treated as a plurality of ports acting as one logical port. **FIG. 19** illustrates a configuration wherein SW**1**, containing a plurality of ports thereon, has a trunk group with ports **1** and **2** of SW**2**, with the trunk group being two communication lines connecting ports **1** and **2** of each of SW**1** and SW**2**. This forms trunk group T. In this example, station A, connected to port **3** of SW**1**, is seeking to communicate or send a packet to station B, located on port **26** of switch SW**2**. The packet must travel, therefore, through trunk group T from port **3** of SW**1** to port **26** of SW**2**. It should be noted that the trunk group could include any of a number of ports between the switches. As traffic flow increases between SW**1** and SW**2**, trunk group T could be reconfigured by the administrator to include more ports, thereby effectively increasing bandwidth. In addition to providing increased bandwidth, trunking provides redundancy in the event of a failure of one of the links between the switches. Once the trunk group is created, a user programs SOC **10** through CPU **52** to recognize the appropriate trunk group or trunk groups, with trunk group identification (TGID) information. A trunk group port bit map is prepared for each TGID; and a trunk group table, provided for each module on SOC **10**, is used to implement the trunk group, which can also be called a port bundle. A trunk group bit map table is also provided. These two tables are provided on a per module basis, and, like tables **21**, **22**, and **23**, are implemented in silicon as two-dimensional arrays. In one embodiment of SOC **10**, six trunk groups can be supported, with each trunk group having up to eight trunk ports thereupon. For communication, however, in order to prevent out-of-ordering of packets or frames, the same port must be used for packet flow. Identification of which port will be used for communication is based upon any of the following: source MAC address, destination MAC address, source IP address, destination IP address, or combinations of source and destination addresses. If source MAC is used, as an example, if station A on port **3** of SW**1** is seeking to send a packet to station B on port **26** of SW**2**, then the last three bits of the source MAC address of station A, which are in the source address field of the packet, are used to generate a trunk port index. The trunk port index, which is then looked up on the trunk group table by the ingress submodule **14** of the particular port on the switch, in order to determine which port of the trunk group will be used for the communication. In other words, when a packet is sought to be sent from station A to station B, address resolution is conducted as set forth above. If the packet is to be handled through a trunk group, then a T bit will be set in the ARL entry which is matched by the destination address. If the T bit or trunk bit is set, then the destination address is learned from one of the trunk ports. The egress port, therefore, is not learned from the port number obtained in the ARL entry, but is instead learned from the trunk group ID and rules tag (RTAG) which is picked up from the ARL entry, and which can be used to identify the trunk port based upon the trunk port index contained in the trunk group table. The RTAG and TGID which are contained in the ARL entry therefore define which part of the packet is used to generate the trunk port index. For example, if the RTAG value is 1, then the last three bits of the source MAC address are used to identify the trunk port index; using the trunk group table, the trunk port index can then be used to identify the appropriate trunk port for communication. If the RTAG value is 2, then it is the last three bits of the destination MAC address which are used to generate the trunk port index. If the RTAG is 3, then the last three bits of the source MAC address are XORED with the last three bits of the destination MAC address. The result of this operation is used to generate the trunk port index. For IP packets, additional RTAG values are used so that the source IP and destination IP addresses are used for the trunk port index, rather than the MAC addresses.

[**0168**] SOC **10** is configured such that if a trunk port goes down or fails for any reason, notification is sent through CMIC **40** to CPU **52**. CPU **52** is then configured to automatically review the trunk group table, and VLAN tables to make sure that the appropriate port bit maps are changed to reflect the fact that a port has gone down and is therefore removed. Similarly, when the trunk port or link is reestablished, the process has to be reversed and a message must be sent to CPU **52** so that the VLAN tables, trunk group tables, etc. can be updated to reflect the presence of the trunk port.

[**0169**] Furthermore, it should be noted that since the trunk group is treated as a single logical link, the trunk group is configured to accept control frames or control packets, also known as BPDUs, only one of the trunk ports. The port based VLAN table, therefore, must be configured to reject incoming BPDUs of non-specified trunk ports. This rejection can be easily set by the setting of a B bit in the VLAN table. IEEE standard 802.1d defines an algorithm known as the spanning tree algorithm, for avoiding data loops in switches where trunk groups exist. Referring to **FIG. 19, a** logical loop could exist between ports **1** and **2** and switches SW**1** and SW**2**. The spanning algorithm tree defines four separate states, with these states including disabling, blocking, listening, learning, and forwarding. The port based VLAN table is configured to enable CPU **52** to program the ports for a specific ARL state, so that the ARL logic takes the appropriate action on the incoming packets. As noted previously, the B bit in the VLAN table provides the capability to reject BPDUs. The St bit in the ARL table enables the CPU to learn the static entries; as noted in **FIG. 18**, static entries are not aged by the aging process. The hit bit in the ARL table, as mentioned previously, enables the ARL engine **143** to detect whether or not there was a hit on this

entry. In other words, SOC **10** utilizes a unique configuration of ARL tables, VLAN tables, modules, etc. in order to provide an efficient silicon based implementation of the spanning tree states.

[**0170**] In certain situations, such as a destination lookup failure (DLF) where a packet is sent to all ports on a VLAN, or a multicast packet, the trunk group bit map table is configured to pickup appropriate port information so that the packet is not sent back to the members of the same source trunk group. This prevents unnecessary traffic on the LAN, and maintains the efficiency at the trunk group.

[**0171**] IP/IPX

[**0172**] Referring again to **FIG. 14**, each EPIC **20** or GPIC **30** can be configured to enable support of both IP and IPX protocol at linespeed. This flexibility is provided without having any negative effect on system performance, and utilizes a table, implemented in silicon, which can be selected for IP protocol, IPX protocol, or a combination of IP protocol and IPX protocol. This capability is provided within logic circuitry **1411**, and utilizes an IP longest prefix cache lookup (IP_LPC), and an IPX longest prefix cache lookup (IPX_LPC). During the layer **3** lookup, a number of concurrent searches are performed; an L3 fast lookup, and the IP longest prefix cache lookup, are concurrently performed if the packet is identified by the packet header as an IP packet. If the packet header identifies the packet as an IPX packet, the L3 fast lookup and the IPX longest prefix cache lookup will be concurrently performed. It should be noted that ARL/L3 tables **21**/**31** include an IP default router table which is utilized for an IP longest prefix cache lookup when the packet is identified as an IP packet, and also includes an IPX default router table which is utilized when the packet header identifies the packet as an IPX packet. Appropriate hexadecimal codes are used to determine the packet types. If the packet is identified as neither an IP packet nor an IPX packet, the packet is directed to CPU **52** via CPS channel **80** and CMIC **40**. It should be noted that if the packet is identified as an IPX packet, it could be any one of four types of IPX packets. The four types are Ethernet 802.3, Ethernet 802.2, Ethernet SNAP, and Ethernet II.

[**0173**] The concurrent lookup of L3 and either IP or IPX are important to the performance of SOC **10**. In one embodiment of SOC **10**, the L3 table would include a portion which has IP address information, and another portion which has IPX information, as the default router tables. These default router tables, as noted previously, are searched depending upon whether the packet is an IP packet or an IPX packet. In order to more clearly illustrate the tables, the L3 table format for an L3 table within ARL/L3 tables **21** is as follows:

[**0174**] IP or IPX Address—32 bits long—IP or IPX Address—is a 32 bit IP or IPX Address. The Destination IP or IPX Address in a packet is used as a key in searching this table.

[**0175**] Mac Address—48 bits long—Mac Address is really the next Hop Mac Address. This Mac address is used as the Destination Mac Address in the forwarded IP Packet.

[**0176**] Port Number—6 bits long—Port Number—is the port number the packet has to go out if the Destination IP Address matches this entry's IP Address.

[**0177**] L3 Interface Num—5 bits long—L3 Interface Num—This L3 Interface Number is used to get the Router Mac Address from the L3 Interface Table.

[**0178**] L3 Hit Bit—1 bit long—L3 Hit bit—is used to check if there is hit or this Entry. The hit bit is set when the Source IP Address search matches this entry. The L3 Aging Process ages the entry if this bit is not set.

[**0179**] Frame Type—2 bits long—Frame Type indicates type of IPX Frame (802.2, Ethernet II, SNAP and 802.3) accepted by this IPX Node.

[**0180**] Value 00—Ethernet II Frame. Value 01—SNAP Frame. Value 02—802.2 Frame. Value 03—802.3 Frame.

[**0181**] Reserved—4 bits long—Reserved for future use.

[**0182**] The fields of the default IP router table are as follows:

[**0183**] IP Subnet Address—32 bits long—IP Subnet Address—is a 32 bit IP Address of the Subnet.

[**0184**] Mac Address—48 bits long—Mac Address is really the next Hop Mac Address and in this case is the Mac Address of the default Router.

[**0185**] Port Number—6 bits long—Port Number is the port number forwarded packet has to go out.

[**0186**] L3 Interface Num—5 bits long—L3 Interface Num is L3 Interface Number.

[**0187**] IP Subnet Bits—5 bits long—IP Subnet Bits is total number of Subnet Bits in the Subnet Mask. These bits are ANDED with Destination IP Address before comparing with Subnet Address.

[**0188**] C Bit—1 bit long—C Bit—If this bit is set then send the packet to CPU also.

[**0189**] The fields of the default IPX router table within ARL/L3 tables **21** are as follows:

[**0190**] IPX Subnet Address—32 bits long—IPX Subnet Address is a 32 bit IPX Address of the Subnet.

[**0191**] Mac Address—48 bits long—Mac Address is really the next Hop Mac Address and in this case is the Mac Address of the default Router.

[**0192**] Port Number—6 bits long—Port Number is the port number forwarded packet has to go out.

[**0193**] L3 Interface Num—5 bits long—L3 Interface Num is L3 Interface Number.

[**0194**] IPX Subnet Bits—5 bits long—IPX Subnet Bits is total number of Subnet Bits in the Subnet Mask. These bits are ANDED with Destination IPX Address before comparing with Subnet Address.

[**0195**] C Bit—1 bit long—C Bit—If this bit is set then send the packet to CPU also.

[**0196**] If a match is not found in the L3 table for the destination IP address, longest prefix match in the default IP router fails, then the packet is given to the CPU. Similarly, if a match is not found on the L3 table for a destination IPX address, and the longest prefix match in the default IPX

router fails, then the packet is given to the CPU. The lookups are done in parallel, but if the destination IP or IPX address is found in the L3 table, then the results of the default router table lookup are abandoned.

[**0197**] The longest prefix cache lookup, whether it be for IP or IPX, includes repetitive matching attempts of bits of the IP subnet address. The longest prefix match consists of ANDing the destination IP address with the number of IP or IPX subnet bits and comparing the result with the IP subnet address. Once a longest prefix match is found, as long as the TTL is not equal to one, then appropriate IP check sums are recalculated, the destination MAC address is replaced with the next hop MAC address, and the source MAC address is replaced with the router MAC address of the interface. The VLAN ID is obtained from the L3 interface table, and the packet is then sent as either tagged or untagged, as appropriate. If the C bit is set, a copy of the packet is sent to the CPU as may be necessary for learning or other CPU-related functions.

[**0198**] It should be noted, therefore, that if a packet arrives destined to a MAC address associated with a level 3 interface for a selected VLAN, the ingress looks for a match at an IP/IPX destination subnet level. If there is no IP/IPX destination subnet match, the packet is forwarded to CPU **52** for appropriate routing. However, if an IP/IPX match is made, then the MAC address of the next hop and the egress port number is identified and the packet is appropriately forwarded.

[**0199**] In other words, the ingress of the EPIC **20** or GPIC **30** is configured with respect to ARL/L3 tables **21** so that when a packet enters ingress submodule **14**, the ingress can identify whether or not the packet is an IP packet or an IPX packet. IP packets are directed to an IP/ARL lookup, and IPX configured packets are directed to an IPX/ARL lookup. If an L3 match is found during the L3 lookup, then the longest prefix match lookups are abandoned.

[**0200**] HOL Blocking

[**0201**] SOC **10** incorporates some unique data flow characteristics, in order maximize efficiency and switching speed. In network communications, a concept known as head-of-line or HOL blocking occurs when a port is attempting to send a packet to a congested port, and immediately behind that packet is another packet which is intended to be sent to an un-congested port. The congestion at the destination port of the first packet would result in delay of the transfer of the second packet to the un-congested port. Each EPIC **20** and GPIC **30** within SOC **10** includes a unique HOL blocking mechanism in order to maximize throughput and minimize the negative effects that a single congested port would have on traffic going to un-congested ports. For example, if a port on a GPIC **30**, with a data rate of, for example, **1000** megabits per second is attempting to send data to another port **24***a* on EPIC **20***a*, port **24***a* would immediately be congested. Each port on each GPIC **30** and EPIC **20** is programmed by CPU **52** to have a high watermark and a low watermark per port per class of service (COS), with respect to buffer space within CBP **50**. The fact that the head of line blocking mechanism enables per port per COS head of line blocking prevention enables a more efficient data flow than that which is known in the art. When the output queue for a particular port hits the preprogrammed high watermark within the allocated buffer in CBP **50**, PMMU **70** sends, on S channel **83**, a COS queue status notification to the appropriate ingress module of the appropriate GPIC **30** or EPIC **20**. When the message is received, the active port register corresponding to the COS indicated in the message is updated. If the port bit for that particular port is set to zero, then the ingress is configured to drop all packets going to that port. Although the dropped packets will have a negative effect on communication to the congested port, the dropping of the packets destined for congested ports enables packets going to un-congested ports to be expeditiously forwarded thereto. When the output queue goes below the preprogrammed low watermark, PMMU **70** sends a COS queue status notification message on the sideband channel with the bit set for the port. When the ingress gets this message, the bit corresponding to the port in the active port register for the module can send the packet to the appropriate output queue. By waiting until the output queue goes below the low watermark before re-activating the port, a hysteresis is built into the system to prevent constant activation and deactivation of the port based upon the forwarding of only one packet, or a small number of packets. It should be noted that every module has an active port register. As an example, each COS per port may have four registers for storing the high watermark and the low watermark; these registers can store data in terms of number of cells on the output queue, or in terms of number of packets on the output queue. In the case of a unicast message, the packet is merely dropped; in the case of multicast or broadcast messages, the message is dropped with respect to congested ports, but forwarded to uncongested ports. PMMU **70** includes all logic required to implement this mechanism to prevent HOL blocking, with respect to budgeting of cells and packets. PMMU **70** includes an HOL blocking marker register to implement the mechanism based upon cells. If the local cell count plus the global cell count for a particular egress port exceeds the HOL blocking marker register value, then PMMU **70** sends the HOL status notification message. PMMU **70** can also implement an early HOL notification, through the use of a bit in the PMMU configuration register which is referred to as a Use Advanced Warning Bit. If this bit is set, the PMMU **70** sends the HOL notification message if the local cell count plus the global cell count plus 121 is greater than the value in the HOL blocking marker register. 121 is the number of cells in a jumbo frame.

[**0202**] With respect to the hysteresis discussed above, it should be noted that PMMU **70** implements both a spatial and a temporal hysteresis. When the local cell count plus global cell count value goes below the value in the HOL blocking marker register, then a poaching timer value from a PMMU configuration register is used to load into a counter. The counter is decremented every 32 clock cycles. When the counter reaches 0, PMMU **70** sends the HOL status message with the new port bit map. The bit corresponding to the egress port is reset to 0, to indicate that there is no more HOL blocking on the egress port. In order to carry on HOL blocking prevention based upon packets, a skid mark value is defined in the PMMU configuration register. If the number of transaction queue entries plus the skid mark value is greater than the maximum transaction queue size per COS, then PMMU **70** sends the COS queue status message on the S channel. Once the ingress port receives this message, the ingress port will stop sending packets for this particular port and COS combination. Depending upon

the configuration and the packet length received for the egress port, either the head of line blocking for the cell high watermark or the head of line blocking for the packet high watermark may be reached first. This configuration, therefore, works to prevent either a small series of very large packets or a large series of very small packets from creating HOL blocking problems.

[**0203**] The low watermark discussed previously with respect to CBP admission logic is for the purpose of ensuring that independent of traffic conditions, each port will have appropriate buffer space allocated in the CBP to prevent port starvation, and ensure that each port will be able to communicate with every other port to the extent that the network can support such communication.

[**0204**] Referring again to PMMU **70** illustrated in **FIG. 10**, CBM **71** is configured to maximize availability of address pointers associated with incoming packets from a free address pool. CBM **71**, as noted previously, stores the first cell pointer until incoming packet **112** is received and assembled either in CBP **50**, or GBP **60**. If the purge flag of the corresponding P channel message is set, CBM **71** purges the incoming data packet **112**, and therefore makes the address pointers GPID/CPID associated with the incoming packet to be available. When the purge flag is set, therefore, CBM **71** essentially flushes or purges the packet from processing of SOC **10**, thereby preventing subsequent communication with the associated egress manager **76** associated with the purged packet. CBM **71** is also configured to communicate with egress managers **76** to delete aged and congested packets. Aged and congested packets are directed to CBM **71** based upon the associated starting address pointer, and the reclaim unit within CBM **71** frees the pointers associated with the packets to be deleted; this is, essentially, accomplished by modifying the free address pool to reflect this change. The memory budget value is updated by decrementing the current value of the associated memory by the number of data cells which are purged.

[**0205**] To summarize, resolved packets are placed on C channel **81** by ingress submodule **14** as discussed with respect to **FIG. 8**. CBM **71** interfaces with the CPS channel, and every time there is a cell/packet addressed to an egress port, CBM **71** assigns cell pointers, and manages the linked list. A plurality of concurrent reassembly engines are provided, with one reassembly engine for each egress manager **76**, and tracks the frame status. Once a plurality of cells representing a packet is fully written into CBP **50**, CBM **71** sends out CPIDs to the respective egress managers, as discussed above. The CPIDs point to the first cell of the packet in the CBP; packet flow is then controlled by egress managers **76** to transaction MACs **140** once the CPID/GPID assignment is completed by CBM **71**. The budget register (not shown) of the respective egress manager **76** is appropriately decremented by the number of cells associated with the egress, after the complete packet is written into the CBP **50**. EGM **76** writes the appropriate PIDs into its transaction FIFO. Since there are multiple classes of service (COSs), then the egress manager **76** writes the PIDs into the selected transaction FIFO corresponding to the selected COS. As will be discussed below with respect to **FIG. 13**, each egress manager **76** has its own scheduler interfacing to the transaction pool or transaction FIFO on one side, and the packet pool or packet FIFO on the other side. The transaction FIFO includes all PIDs, and the packet pool or packet FIFO includes only CPIDs. The packet FIFO interfaces to the transaction FIFO, and initiates transmission based upon requests from the transmission MAC. Once transmission is started, data is read from CBP **50** one cell at a time, based upon transaction FIFO requests.

[**0206**] As noted previously, there is one egress manager for each port of every EPIC **20** and GPIC **30**, and is associated with egress sub-module **18**. **FIG. 13** illustrates a block diagram of an egress manager **76** communicating with R channel **77**. For each data packet **112** received by an ingress submodule **14** of an EPIC **20** of SOC **10**, CBM **71** assigns a Pointer Identification (PID); if the packet **112** is admitted to CBP **50**, the CBM **71** assigns a CPID, and if the packet **112** is admitted to GBP **60**, the CBM **71** assigns a GPID number. At this time, CBM **71** notifies the corresponding egress manager **76** which will handle the packet **112**, and passes the PID to the corresponding egress manager **76** through R channel **77**. In the case of a unicast packet, only one egress manager **76** would receive the PID. However, if the incoming packet were a multicast or broadcast packet, each egress manager **76** to which the packet is directed will receive the PID. For this reason, a multicast or broadcast packet needs only to be stored once in the appropriate memory, be it either CBP **50** or GBP **60**.

[**0207**] Each egress manager **76** includes an R channel interface unit (RCIF) **131**, a transaction FIFO **132**, a COS manager **133**, a scheduler **134**, an accelerated packet flush unit (APF) **135**, a memory read unit (MRU) **136**, a time stamp check unit (TCU) **137**, and an untag unit **138**. MRU **136** communicates with CMC **79**, which is connected to CBP **50**. Scheduler **134** is connected to a packet FIFO **139**. RCIF **131** handles all messages between CBM **71** and egress manager **76**. When a packet **112** is received and stored in SOC **10**, CBM **71** passes the packet information to RCIF **131** of the associated egress manager **76**. The packet information will include an indication of whether or not the packet is stored in CBP **50** or GBP **70**, the size of the packet, and the PID. RCIF **131** then passes the received packet information to transaction FIFO **132**. Transaction FIFO **132** is a fixed depth FIFO with eight COS priority queues, and is arranged as a matrix with a number of rows and columns. Each column of transaction FIFO **132** represents a class of service (COS), and the total number of rows equals the number of transactions allowed for any one class of service. COS manager **133** works in conjunction with scheduler **134** in order to provide policy based quality of service (QOS), based upon ethernet standards. As data packets arrive in one or more of the COS priority queues of transaction FIFO **132**, scheduler **134** directs a selected packet pointer from one of the priority queues to the packet FIFO **139**. The selection of the packet pointer is based upon a queue scheduling algorithm, which is programmed by a user through CPU **52**, within COS manager **133**. An example of a COS issue is video, which requires greater bandwidth than text documents. A data packet **112** of video information may therefore be passed to packet FIFO **139** ahead of a packet associated with a text document. The COS manager **133** would therefore direct scheduler **134** to select the packet pointer associated with the packet of video data.

[**0208**] The COS manager **133** can also be programmed using a strict priority based scheduling method, or a weighted priority based scheduling method of selecting the next packet pointer in transaction FIFO **132**. Utilizing a

strict priority based scheduling method, each of the eight COS priority queues are provided with a priority with respect to each other COS queue. Any packets residing in the highest priority COS queue are extracted from transaction FIFO **132** for transmission. On the other hand, utilizing a weighted priority based scheduling scheme, each COS priority queue is provided with a programmable bandwidth. After assigning the queue priority of each COS queue, each COS priority queue is given a minimum and a maximum bandwidth. The minimum and maximum bandwidth values are user programmable. Once the higher priority queues achieve their minimum bandwidth value, COS manager **133** allocates any remaining bandwidth based upon any occurrence of exceeding the maximum bandwidth for any one priority queue. This configuration guarantees that a maximum bandwidth will be achieved by the high priority queues, while the lower priority queues are provided with a lower bandwidth.

[**0209**] The programmable nature of the COS manager enables the scheduling algorithm to be modified based upon a user's specific needs. For example, COS manager **133** can consider a maximum packet delay value which must be met by a transaction FIFO queue. In other words, COS manager **133** can require that a packet **112** is not delayed in transmission by the maximum packet delay value; this ensures that the data flow of high speed data such as audio, video, and other real time data is continuously and smoothly transmitted.

[**0210**] If the requested packet is located in CBP **50**, the CPID is passed from transaction FIFO **132** to packet FIFO **139**. If the requested packet is located in GBP **60**, the scheduler initiates a fetch of the packet from GBP **60** to CBP **50**; packet FIFO **139** only utilizes valid CPID information, and does not utilize GPID information. The packet FIFO **139** only communicates with the CBP and not the GBP. When the egress seeks to retrieve a packet, the packet can only be retrieved from the CBP; for this reason, if the requested packet is located in the GBP **50**, the scheduler fetches the packet so that the egress can properly retrieve the packet from the CBP.

[**0211**] APF **135** monitors the status of packet FIFO **139**. After packet FIFO **139** is full for a specified time period, APF **135** flushes out the packet FIFO. The CBM reclaim unit is provided with the packet pointers stored in packet FIFO **139** by APF **135**, and the reclaim unit is instructed by APF **135** to release the packet pointers as part of the free address pool. APF **135** also disables the ingress port **21** associated with the egress manager **76**.

[**0212**] While packet FIFO **139** receives the packet pointers from scheduler **134**, MRU **136** extracts the packet pointers for dispatch to the proper egress port. After MRU **136** receives the packet pointer, it passes the packet pointer information to CMC **79**, which retrieves each data cell from CBP **50**. MRU **136** passes the first data cell **112***a*, incorporating cell header information, to TCU **137** and untag unit **138**. TCU **137** determines whether the packet has aged by comparing the time stamps stored within data cell **112***a* and the current time. If the storage time is greater than a programmable discard time, then packet **112** is discarded as an aged packet. Additionally, if there is a pending request to untag the data cell **112***a*, untag unit **138** will remove the tag header prior to dispatching the packet. Tag headers are defined in IEEE Standard 802.1q.

[**0213**] Egress manager **76**, through MRU **136**, interfaces with transmission FIFO **140**, which is a transmission FIFO for an appropriate media access controller (MAC); media access controllers are known in the ethernet art. MRU **136** prefetches the data packet **112** from the appropriate memory, and sends the packet to transmission FIFO **140**, flagging the beginning and the ending of the packet. If necessary, transmission FIFO **140** will pad the packet so that the packet is 64 bytes in length.

[**0214**] As shown in **FIG. 9**, packet **112** is sliced or segmented into a plurality of 64 byte data cells for handling within SOC **10**. The segmentation of packets into cells simplifies handling thereof, and improves granularity, as well as making it simpler to adapt SOC **10** to cell-based protocols such as ATM. However, before the cells are transmitted out of SOC **10**, they must be reassembled into packet format for proper communication in accordance with the appropriate communication protocol. A cell reassembly engine (not shown) is incorporated within each egress of SOC **10** to reassemble the sliced cells **112***a* and **112***b* into an appropriately processed and massaged packet for further communication.

[**0215**] **FIG. 16** is a block diagram showing some of the elements of CPU interface or CMIC **40**. In a preferred embodiment, CMIC **40** provides a 32 bit 66 MHz PCI interface, as well as an **12**C interface between SOC **10** and external CPU **52**. PCI communication is controlled by PCI core **41**, and **12**C communication is performed by **12**C core **42**, through CMIC bus **167**. As shown in the figure, many CMIC **40** elements communicate with each other through CMIC bus **167**. The PCI interface is typically used for configuration and programming of SOC **10** elements such as rules tables, filter masks, packet handling, etc., as well as moving data to and from the CPU or other PCI uplink. The PCI interface is suitable for high end systems wherein CPU **52** is a powerful CPU and running a sufficient protocol stack as required to support layer two and layer three switching functions. The **12**C interface is suitable for low end systems, where CPU **52** is primarily used for initialization. Low end systems would seldom change the configuration of SOC **10** after the switch is up and running.

[**0216**] CPU **52** is treated by SOC **10** as any other port. Therefore, CMIC **40** must provide necessary port functions much like other port functions defined above. CMIC **40** supports all S channel commands and messages, thereby enabling CPU **52** to access the entire packet memory and register set; this also enables CPU **52** to issue insert and delete entries into ARL/L3 tables, issue initialize CFAP/SFAP commands, read/write memory commands and ACKs, read/write register command and ACKs, etc. Internal to SOC **10**, CMIC **40** interfaces to C channel **81**, P channel **82**, and S channel **83**, and is capable of acting as an S channel master as well as S channel slave. To this end, CPU **52** must read or write 32-bit D words. For ARL table insertion and deletion, CMIC **40** supports buffering of four insert/delete messages which can be polled or interrupt driven. ARL messages can also be placed directly into CPU memory through a DMA access using an ARL DMA controller **161**. DMA controller **161** can interrupt CPU **52** after transfer of any ARL message, or when all the requested ARL packets have been placed into CPU memory.

[0217] Communication between CMIC **40** and C channel **81**/P channel **82** is performed through the use of CP-channel buffers **162** for buffering C and P channel messages, and CP bus interface **163**. S channel ARL message buffers **164** and S channel bus interface **165** enable communication with S channel **83**. As noted previously, PIO (Programmed Input/Output) registers are used, as illustrated by SCH PIO registers **166** and PIO registers **168**, to access the S channel, as well as to program other control, status, address, and data registers. PIO registers **168** communicate with CMIC bus **167** through **12**C slave interface **42***a* and **12**C master interface **42***b*. DMA controller **161** enables chaining, in memory, thereby allowing CPU **52** to transfer multiple packets of data without continuous CPU intervention. Each DMA channel can therefore be programmed to perform a read or write DMA operation. Specific descriptor formats may be selected as appropriate to execute a desired DMA function according to application rules. For receiving cells from PMMU **70** for transfer to memory, if appropriate, CMIC **40** acts as an egress port, and follows egress protocol as discussed previously. For transferring cells to PMMU **70**, CMIC **40** acts as an ingress port, and follows ingress protocol as discussed previously. CMIC **40** checks for active ports, COS queue availability and other ingress functions, as well as supporting the HOL blocking mechanism discussed above. CMIC **40** supports single and burst PIO operations; however, burst should be limited to S channel buffers and ARL insert/delete message buffers. Referring once again to **12**C slave interface **42***a*, the CMIC **40** is configured to have an **12**C slave address so that an external **12**C master can access registers of CMIC **40**. CMIC **40** can inversely operate as an **12**C master, and therefore, access other **12**C slaves. It should be noted that CMIC **40** can also support MIIM through MIIM interface **169**. MIIM support is defined by IEEE Standard 802.3u, and will not be further discussed herein. Similarly, other operational aspects of CMIC **40** are outside of the scope of this invention.

[0218] A unique and advantageous aspect of SOC **10** is the ability of doing concurrent lookups with respect to layer two (ARL), layer three, and filtering. When an incoming packet comes in to an ingress submodule **14** of either an EPIC **20** or a GPIC **30**, as discussed previously, the module is capable of concurrently performing an address lookup to determine if the destination address is within a same VLAN as a source address; if the VLAN IDs are the same, layer **2** or ARL lookup should be sufficient to properly switch the packet in a store and forward configuration. If the VLAN IDs are different, then layer three switching must occur based upon appropriate identification of the destination address, and switching to an appropriate port to get to the VLAN of the destination address. Layer three switching, therefore, must be performed in order to cross VLAN boundaries. Once SOC **10** determines that L3 switching is necessary, SOC **10** identifies the MAC address of a destination router, based upon the L3 lookup. L3 lookup is determined based upon a reading in the beginning portion of the packet of whether or not the L3 bit is set. If the L3 bit is set, then L3 lookup will be necessary in order to identify appropriate routing instructions. If the lookup is unsuccessful, a request is sent to CPU **52** and CPU **52** takes appropriate steps to identify appropriate routing for the packet. Once the CPU has obtained the appropriate routing information, the information is stored in the L3 lookup table, and for the next packet, the lookup will be successful and the packet will be switched in the store and forward configuration.

[0219] The above-discussed configuration of the invention is, in a preferred embodiment, embodied on a semiconductor substrate, such as silicon, with appropriate semiconductor manufacturing techniques and based upon a circuit layout which would, based upon the embodiments discussed above, be apparent to those skilled in the art. A person of skill in the art with respect to semiconductor design and manufacturing would be able to implement the various modules, interfaces, and tables, buffers, etc. of the present invention onto a single semiconductor substrate, based upon the architectural description discussed above. It would also be within the scope of the invention to implement the disclosed elements of the invention in discrete electronic components, thereby taking advantage of the functional aspects of the invention without maximizing the advantages through the use of a single semiconductor substrate. Although the invention has been described based upon these preferred embodiments, it would be apparent to those of skilled in the art that certain modifications, variations, and alternative constructions would be apparent, while remaining within the spirit and scope of the invention. In order to determine the metes and bounds of the invention, therefore, reference should be made to the appended claims.

1. A network switch for network communications, said network switch comprising:

a first data port interface, said first data port interface supporting a plurality of data ports transmitting and receiving data at a first data rate;

a second data port interface, said second data port interface supporting a plurality of data ports transmitting and receiving data at a second data rate;

a CPU interface, said CPU interface configured to communicate with a CPU;

an internal memory, said internal memory communicating with said first data port interface and said second data port interface;

a memory management unit, said memory management unit including an external memory interface for communicating data from at least one of said first data port interface and said second data port interface and an external memory;

a communication channel, said communication channel for communicating data and messaging information between said first data port interface, said second data port interface, the CPU interface, said internal memory, and said memory management unit;

wherein one data port interface of said first data port interface and said second data port interface comprises a fast filtering processor, said fast filtering processor filtering packets coming into the one data port interface, and taking selective filter action based upon a filtering result.

2. A network switch as recited in claim 1, wherein said fast filtering processor is programmable by inputs from he CPU through the CPU interface.

3. A network switch as recited in claim 1, wherein one data port interface includes a rules table interface and a rules table thereupon, and wherein said fast filtering processor applies a filter mask to a packet incoming thereto, providing a filter result, and wherein said filter result is applied to predetermined rules in said rules table, and wherein action is taken on the packet based upon the filtering result.

4. A network switch as recited in claim 3, wherein said first data port interface, second data port interface, CPU interface, internal memory, memory management unit, communications channel, fast filtering processor, and said rules table are implemented on a common semiconductor substrate.

5. A network switch as recited in claim 4, wherein said fast filtering processor includes a set of exclusive filter masks and inclusive filter masks therein, wherein said exclusive filter masks are configured to exclude all packets except packets with which there is a match with the filter result.

6. A network switch as recited in claim 4, wherein said fast filtering processor includes filter masks which filter ingress port fields, egress port fields, and filter select fields of an incoming packet.

7. A network switch as recited in claim 6, wherein the rules table includes filter value fields for filter result look-up, ingress port fields, egress port fields, filter select fields, action bit fields, priority bit fields, type-of-services fields, and output port fields.

8. A network switch as recited in claim 1, said fast filtering processor comprising a priority assignment unit for assigning a weighted priority value to untagged packets entering one of the first data port interface and the second data port interface.

9. A network switch as recited in claim 1, wherein the fast filtering processor filters the packets independent of the CPU interface, and therefore without communicating with the CPU.

10. A network switch as recited in claim 1, wherein the fast filtering processor includes a tagging unit which applies an IEEE defined tag to incoming packets, said IEEE defined tag identifying packet parameters.

11. A network switch as recited in claim 10, wherein said packet parameters include class-of-service.

12. A method of handling data packets in a network switch, said method comprising:

placing incoming packets into an input queue;

applying the input data packets to an address resolution logic engine;

performing a lookup to determine whether certain packet fields are stored in a lookup table;

filtering the incoming packet through a fast filtering processor in order to determine what specific actions should be taken to modify the packet for further handling;

discarding, forwarding, or modifying the packet based upon the filtering; and

if the packet is to be forwarded, applying a control message to the packet in order to control further packet forwarding,

wherein the packet data is placed on a first communication channel, and wherein the control message is placed on a second communication channel, said first and second channels being separate but synchronized with each other.

13. A method as recited in claim 12, wherein filtering the incoming packet includes a step of tagging the incoming packet with an IEEE defined tag.

14. A method as recited in claim 13, wherein said IEEE defined tag defines packet parameters, including class of service priority.

15. A method of creating a packet handling filter for a network switch, said method comprising:

providing a processor for processing and entering filter parameters;

providing a rules table to implement a filter mask;

identifying protocol fields of interest for selected fields of a selected packet type;

determining filter conditions for the preselected packet type;

providing a series of digital values representing desired filter conditions for the preselected packet type, thereby forming the filter mask, said filter mask comprising a bit map for logical comparison with an incoming data packet;

determining whether the filter will be an inclusive or exclusive filter, and configuring filtering actions based thereupon;

determining whether said filter will be applied to incoming data packets or outgoing data packets;

if said filter is for incoming data packets, configuring said filter mask to be an ingress port filter mask, and if said filter is for outgoing packets, configuring said filter mask to be an egress filter mask;

constructing rules table entries consistent with parameters of the configured filter mask; and

inserting the rules table entries into the rules table.

16. A method as recited in claim 12, wherein filtering the incoming packet includes filtering the packet independent of control from a remote processor.

* * * * *