UNITED STATES PATENT AND TRADEMARK OFFICE

BEFORE THE PATENT TRIAL AND APPEAL BOARD

SAMSUNG ELECTRONICS CO., LTD. AND

SAMSUNG ELECTRONICS AMERICA, INC.,

Petitioners

v.

MAXELL, LTD.,

Patent Owner

Inter Partes Review No.: IPR2024-00735
U.S. Patent No. 11,017,815

DECLARATION OF DR. BENJAMIN B. BEDERSON

I hereby declare that all statements made herein of my own knowledge are true, and that all statements made on information and belief are believed to be true; and further that these statements were made with the knowledge that willful false statements and the like so made are punishable by fine and/or imprisonment under Section 1001 of Title 18 of the United States Code, and that such willful false statements may jeopardize the validity of the patent which is under review in this proceeding.

Dated: April 18, 2024

By: _____

Dr. Benjamin B. Bederson
University of Maryland, College Park
Professor Emeritus, Computer Science

TABLE OF CONTENTS

Page

I. INTRODUCTION AND SUMMARY OF OPINIONS 1
- **A.** Introduction 1
- **B.** Summary of Opinions 1

II. QUALIFICATIONS AND BACKGROUND 3
- **A.** Qualifications 3
- **B.** Technology Background 10
  - **1.** Graphical User Interfaces (GUIs) & Displays of Video Information 10
  - **2.** Filing systems & Aliases/Links 13
  - **3.** Computer Pointers and Data Structures 15
  - **4.** Digital Media and Playlists 18
- **C.** Materials Considered 25

III. LEGAL STANDARDS 25
- **A.** Obviousness 26
- **B.** Priority/Written Description 30

IV. THE ’815 PATENT 32
- **A.** Summary of the ’815 Patent 32
- **B.** The Challenged Claims 35
- **C.** Prosecution History 36
- **D.** Claim Construction 37
  - **1.** Definition of One of Ordinary Skill in the Art 37
  - **2.** Claim Construction Standards 38
  - **3.** Construction of Terms from the ’815 Patent 40

V. PRIOR ART 46
- **A.** U.S. Patent No. 7,275,063 (“Horn”) (EX1005) 53
- **B.** WinTV (EX1010) 54
- **C.** U.S. Patent No. 7,970,240 (“Chao”) (EX1006) 57

D. U.S. Patent Application Publication No. 20010056434A1 ("Kaplan") (EX1014) 58

E. U.S. Patent Application Publication No. 20040201691 ("Bryant") (EX1015) 62

F. U.S. Patent Application Publication No. 20050160458A1 ("Baumgartner") (EX1016) 68

G. Admitted Prior Art 70

H. U.S. Patent No. 7,650,361 ("Wong") (EX1007) 73

I. U.S. Patent Application Publication No. 20030174844A1 ("Candelore") (EX1013) 73

VI. GROUND 1: HORN AND BAUMGARTNER RENDER OBVIOUS CLAIMS 1-6 AND 9-13 74

A. Motivation to Combine Horn with Baumgartner 74

B. Claim 1 78

1. [1pre] An information processing apparatus comprising: 78

2. [1a] a network interface; 79

3. [1b] a recording medium on which is stored a plurality of video information including first video information received wirelessly by the network interface over a network from another information processing apparatus, ...79

4. [1c] wherein at least some of the plurality of video information is associated with a user profile; 84

5. [1d] a display; and 85

6. [1e] a processor for controlling the display to display: 86

7. [1f] a first area including a first character associated with a first group of video information for a first classification and a second character associated with a second group of video information for a second classification different from the first classification, ...87

8. [1g] the first group of video information being configured to allow a user to edit, ...89

9. [1h] wherein the first group of video information and the second group of video information are part of the plurality of stored video information, and 90

10. [1i] a second area displaying thumbnails corresponding to at least a portion of the plurality of stored video information,.....91

11. [1j] wherein user selection of the first character enables the display of a first group of thumbnails corresponding to the first group of video information in the second area,.....92

12. [1k] wherein user selection of the second character enables the display of a second group of thumbnails corresponding to the second group of video information in the second area,.....93

13. [1l] wherein, upon one video information stored on the recording medium included in both the first group of video information and the second group of video information being deleted from the first group of video information, the one video information continues to be included in the second group of video information and 93

14. [1m] the processor controls the display to display a thumbnail corresponding to the one video information as one of the second group of thumbnails when the second character is selected. 94

C. Claim 2. The information processing apparatus of claim 1, further comprising: wherein the processor generates a group of video information based on user preferences determined by the user selections of the video information, and wherein, upon user selection of the group, the processor controls the display to display thumbnails that correspond to the video information and no other thumbnails associated with video information of other users.....94

D. Claim 3. The information processing apparatus of claim 1, further comprising: an antenna for wirelessly receiving the first video information from the other information processing apparatus.....96

E. Claim 4. 97

1. [4a] The information processing apparatus of claim 1, wherein the plurality of stored video information includes third video information recorded by the information processing apparatus, fourth video information, and fifth video information, ...97

2. [4b] wherein the display displays a user interface having thumbnails corresponding to each of the third, fourth, and fifth video information. 98

F. Claim 5. The information processing apparatus of claim 4, wherein the display displays the third, fourth, and fifth video information according to predetermined playback sequence....99

G. Claim 6. 101

1. [6a] The information processing apparatus of claim 1, wherein the plurality of stored video information includes third video information, fourth video information, and fifth video information, ...101

2. [6b] wherein the plurality of stored video information includes management information corresponding to the third, fourth, and fifth video information, ...101

3. [6c] wherein the management information includes filename information and timing information for each of the third, fourth, and fifth video information such that when the third, fourth, and fifth video information is stored in the recording medium the filename information is updated according to a predetermined sequence....102

H. Claim 9. 104

1. [9pre] An information processing method implemented on an information processing apparatus, the information processing method comprising: 104

2. [9a] storing a plurality of video information including first video information received wirelessly by a network interface over a network from another information processing apparatus, ...104

3. [9b] wherein at least some of the plurality of video information is associated with a user profile; and 104

4. [9c] displaying: 104

5. [9d] a first area including a first character associated with a first group of video information for a first classification and a second character associated with a second group of video information for a second classification different from the first classification, ...104

6. [9e] the first group of video information being configured to allow a user to edit, ...104

7. [9f] wherein the first group of video information and the second group of video information are part of the plurality of stored video information, and 104

8. [9g] a second area displaying thumbnails corresponding to at least a portion of the plurality of stored video information, ...105

9. [9h] wherein user selection of the first character enables the display of a first group of thumbnails corresponding to the first group of video information in the second area, and 105

10. [9i] wherein user selection of the second character enables the display of a second group of thumbnails corresponding to the second group of video information in the second area; 105

11. [9j] upon one video information stored on the recording medium included in both the first group of video information and the second group of video information being deleted from the first group of video information, the one video information continues to be included in the second group of video information, ...105

12. [9k] and displaying a thumbnail corresponding to the one video information as one of the second group of thumbnails when the second character is selected; 105

13. [9l] wherein the processor generating a group of video information based on user preferences determined by the user selections of the video information, and 105

14. [9m] upon user selection of the group, displaying thumbnails that correspond to the video information and no other thumbnails associated with video information of other users. 105

I. Claim 10. The information processing method of claim 9, further comprising: wirelessly receiving the first video information from the other information processing apparatus via an antenna of the information processing apparatus. 106

J. Claim 11. 106

1. [11a] The information processing method of claim 9, wherein the plurality of stored video information includes third video information recorded by the information processing apparatus, fourth video information, and fifth video information, ...106

2. [11b] wherein the information processing apparatus displays a user interface having thumbnails corresponding to each of the third, fourth, and fifth video information. 106

K. Claim 12. The information processing method of claim 11, wherein the information processing apparatus displays the third, fourth, and fifth video information according to predetermined playback sequence. 106

L. Claim 13. 106

1. [13pre] The information processing method of claim 9, ...106

2. [13a] wherein the plurality of stored video information includes third video information, fourth video information, and fifth video information, ...107

3. [13b] wherein the plurality of stored video information includes management information corresponding to the third, fourth, and fifth video information, ...107

4. [13c] wherein the management information includes filename information and timing information for each of the third, fourth, and fifth video information such that when the third, fourth, and fifth video information is stored in the recording medium the filename information is updated according to a predetermined sequence.....107

VII. GROUND 2: HORN, BAUMGARTNER, AND WINTV RENDER OBVIOUS CLAIMS 7, 8, 14, AND 15 107

A. Motivation to Combine WinTV with the Horn-Baumgartner Combination 107

B. Claim 7 108

1. [7a] The information processing apparatus of claim 1, further comprising: an analog to digital converter for converting analog audio information being recorded into digital audio information; 108

2. [7b] a compressor for compressing the plurality of video information including digital video information and the digital audio information; 109

3. [7c] a decoder for decoding, during playback, the compressed digital video information and the compressed digital audio information included in the plurality of stored video information and selected for reproduction by the user; and 110

4. [7d] a digital to analog converter for converting at least the decoded digital audio information into analog audio information during playback. 111

C. Claim 8. 111

1. [8a] The information processing apparatus of claim 1, further comprising: an on screen display generator generating on screen display information, ... 111

2. [8b] wherein the plurality of stored video information includes third video information such that, upon selection for playback, the third video information is outputted with the on screen display information for display of the third video information and the on screen display information. 112

D. Claim 14 113

1. [14a] The information processing method of claim 9, further comprising: converting, by an analog to digital converter of the information processing apparatus, analog audio information being recorded into digital audio information; 113

2. [14b] compressing, by a compressor of the information processing apparatus, the plurality of video information including digital video information and the digital audio information; 113

3. [14c] decoding, during playback and by a decoder of the information processing apparatus, the compressed digital video information and the compressed digital audio information included in the plurality of stored video information and selected for reproduction by the user; and 114

4. [14d] converting, by a digital to analog converter of the information processing apparatus, at least the decoded digital audio information into analog audio information during playback. 114

E. Claim 15 114

1. [15a] The information processing method of claim 9, further comprising: generating, by the information processing apparatus, on screen display information, ... 114

2. [15b] wherein the plurality of stored video information includes third video information such that, upon selection for playback, the third video information is outputted with the on screen display information for display of the third video information and the on screen display information. 114

VIII. GROUND 3: HORN, BAUMGARTNER, WINTV, AND CHAO RENDER OBVIOUS CLAIMS 1-15 115

A. Motivation to Combine Chao with Horn, Baumgartner and WinTV 115

B. Claims 1-15 121

IX. GROUND 4: KAPLAN AND BRYANT RENDER OBVIOUS CLAIMS 1-6 AND 9-13 121

A. Motivation to Combine Kaplan and Bryant 121

B. Claim 1 125

1. [1pre] An information processing apparatus comprising: 125

2. [1a] a network interface; 126

3. [1b] a recording medium on which is stored a plurality of video information including first video information received wirelessly by the network interface over a network from another information processing apparatus, ...128

4. [1c] wherein at least some of the plurality of video information is associated with a user profile; 129

5. [1d] a display; and.....129

6. [1e] a processor for controlling the display to display: 130

10. [1i] a second area displaying thumbnails corresponding to at least a portion of the plurality of stored video information,.....133

11. [1j] wherein user selection of the first character enables the display of a first group of thumbnails corresponding to the first group of video information in the second area,....134

12. [1k] wherein user selection of the second character enables the display of a second group of thumbnails corresponding to the second group of video information in the second area,.....135

14. [1m] the processor controls the display to display a thumbnail corresponding to the one video information as one of the second group of thumbnails when the second character is selected. 142

C. Claim 2. The information processing apparatus of claim 1, further comprising: wherein the processor generates a group of video information based on user preferences determined by the user selections of the video information, and wherein, upon user selection of the group, the processor controls the display to display thumbnails that correspond to the video information and no other thumbnails associated with video information of other users.....143

D. Claim 3. The information processing apparatus of claim 1, further comprising: an antenna for wirelessly receiving the first video information from the other information processing apparatus.....144

E. Claim 4. [4a] The information processing apparatus of claim 1, wherein the plurality of stored video information includes third video information recorded by the information processing apparatus, fourth video information, and fifth video information, [4b] wherein the display displays a user interface having thumbnails corresponding to each of the third, fourth, and fifth video information. 144

F. Claim 5. The information processing apparatus of claim 4, wherein the display displays the third, fourth, and fifth video information according to predetermined playback sequence.....146

G. Claim 6. [6a] The information processing apparatus of claim 1, wherein the plurality of stored video information includes third video information, fourth video information, and fifth video information, [6b] wherein the plurality of stored video information includes management information corresponding to the third, fourth, and fifth video information, [6c] wherein the management information includes filename information and timing information for each of the third, fourth, and fifth video information such that when the third, fourth, and fifth video information is stored in the recording medium the filename information is updated according to a predetermined sequence.....146

H. Claim 9. 149

1. [9pre] An information processing method implemented on an information processing apparatus, the information processing method comprising: 149

2. [9a] storing a plurality of video information including first video information received wirelessly by a network interface over a network from another information processing apparatus, ...149

3. [9b] wherein at least some of the plurality of video information is associated with a user profile; and 149

4. [9c] displaying: 149

5. [9d] a first area including a first character associated with a first group of video information for a first classification and a second character associated with a second group of video information for a second classification different from the first classification, ...149

6. [9e] the first group of video information being configured to allow a user to edit, ... 149

7. [9f] wherein the first group of video information and the second group of video information are part of the plurality of stored video information, and 150

8. [9g] a second area displaying thumbnails corresponding to at least a portion of the plurality of stored video information, ... 150

9. [9h] wherein user selection of the first character enables the display of a first group of thumbnails corresponding to the first group of video information in the second area, and 150

10. [9i] wherein user selection of the second character enables the display of a second group of thumbnails corresponding to the second group of video information in the second area; 150

11. [9j] upon one video information stored on the recording medium included in both the first group of video information and the second group of video information being deleted from the first group of video information, the one video information continues to be included in the second group of video information, ... 150

12. [9k] and displaying a thumbnail corresponding to the one video information as one of the second group of thumbnails when the second character is selected; 150

13. [9l] wherein the processor generating a group of video information based on user preferences determined by the user selections of the video information, and 151

14. [9m] upon user selection of the group, displaying thumbnails that correspond to the video information and no other thumbnails associated with video information of other users. 151

I. Claim 10. The information processing method of claim 9, further comprising: wirelessly receiving the first video information from the other information processing apparatus via an antenna of the information processing apparatus. 151

J. Claim 11 151

1. [11a] The information processing method of claim 9, wherein the plurality of stored video information includes third video information recorded by the information processing apparatus, fourth video information, and fifth video information, ...151

2. [11b] wherein the information processing apparatus displays a user interface having thumbnails corresponding to each of the third, fourth, and fifth video information. 151

K. Claim 12. The information processing method of claim 11, wherein the information processing apparatus displays the third, fourth, and fifth video information according to predetermined playback sequence. 151

L. Claim 13 152

1. [13pre] The information processing method of claim 9, ...152

2. [13a] wherein the plurality of stored video information includes third video information, fourth video information, and fifth video information, ...152

3. [13b] wherein the plurality of stored video information includes management information corresponding to the third, fourth, and fifth video information, ...152

4. [13c] wherein the management information includes filename information and timing information for each of the third, fourth, and fifth video information such that when the third, fourth, and fifth video information is stored in the recording medium the filename information is updated according to a predetermined sequence.....152

X. GROUND 5: KAPLAN, BRYANT AND WINTV 152

A. Motivation to Combine WinTV with the Kaplan-Bryant Combination 152

B. Claims 7, 8, 14, and 15 153

XI. GROUND 6: HORN, BAUMGARTNER & CANDELORE 154

A. Motivation to Combine 154

1. Horn and Baumgartner.....154

2. Horn-Baumgartner and Candelore 154

B. Claim 16 155

1. [16pre] A method for reproducing video content associated with user profiles being implemented on an information processing apparatus, comprising: 155

2. [16a] receiving, via a network, first video information wirelessly from a device external to the information processing apparatus, the first video information being received including second video information that is encrypted; 156

3. [16b] displaying, on a display device, a first user interface for a user to select a user profile from among a plurality of user profiles including a first user profile associated with a first character and a second user profile associated with a second character, ...161

4. [16c] the plurality of user profiles being associated with video information and the first user interface including an option for a user to select the first user profile from the plurality of user profiles by selecting the first character; 164

5. [16d] receiving a selection of the first user profile; 167

6. [16e] displaying, in response to the selection, a second user interface for a user to select desired video information to be reproduced from among the first video information, ...168

7. [16f] the second user interface being associated with the first user profile and displaying the first character, the first character associated with a first group of video information and indicating an identity of the user of the first user profile, ...169

8. [16g] the second user interface further displaying thumbnails corresponding to the first group of video information; 170

9. [16h] displaying the second character and a second group of thumbnails corresponding to a second group of video information associated with the second user profile when the second character is selected, ...171

10. [16i] the first group of video information and the second group of video information including one video information that is the same; 171

11. [16j] receiving a selection to remove the one video information from the first group of video information associated with the first user profile; 173

12. [16k] removing the one video information from the first group of video information, wherein, upon the one video information being removed from the first group of video information, the one video information continues to be included in the second group of video information for the second user profile and the second group of thumbnails continues to display a thumbnail corresponding to the one video information when the second character is selected; 173

13. [16l] receiving a selection of desired video information based on a selection of a thumbnail from the first group of thumbnails, the desired video information included in the second video information; 174

14. [16m] decrypting video information corresponding to the selected thumbnail; and displaying the decrypted video information. 174

C. Claim 17. The method of claim 16, wherein any user can delete stored video information regardless of a user profile from the plurality of user profiles that was used to record the stored video information. 175

D. Claim 18. The method of claim 16, further comprising: generating a list of video information based on preferences of a user determined by a user selections of thumbnails from the first or second group of thumbnails. 175

E. Claim 19 176

1. [19a] The method of claim 16, further comprising: generating a list of video information based on preferences of a user determined by a user selections of thumbnails associated with the first video information, the list including third video information; 176

2. [19b] receiving a selection of the list by the user; and in response to the selection of the list, displaying the thumbnails that correspond to the third video information and no other thumbnails associated with video information of other users. 177

F. Claim 21 177

1. [21pre] An information processing apparatus comprising: ...177

2. [21a] a network interface receiving first video information wirelessly from a device external to the information processing apparatus, the first video information being received including second video information that is encrypted; 178

3. [21b] a display displaying a first user interface for a user to select a user profile from among a plurality of user profiles including a first user profile associated with a first character and a second user profile associated with a second character, ...178

4. [21c] the plurality of user profiles being associated with video information and the first user interface including an option for a user to select the first user profile from the plurality of user profiles by selecting the first character; 179

5. [21d] an input interface receiving a selection of the first user profile at a first time and a selection of the second character at a second time, ...179

6. [21e] wherein, in response to the selection of the first user profile, the display displays a second user interface for a user to select desired video information to be reproduced from among the first video information, ...179

7. [21f] the second user interface being associated with the first user profile and displaying the first character, the first character associated with a first group of video information and indicating an identity of the user which the first user profile is associated with, ...179

8. [21g] the second user interface further displaying thumbnails corresponding to the first group of video information, and 179

9. [21h] wherein, in response to the selection of the second user profile, the display displays the second character and a second group of thumbnails corresponding to a second group of video information associated with the second user profile when the second character is selected, ...179

10. [21i] the first group of video information and the second group of video information including one video information that is the same; and 180

11. [21j] a processor for removing one video information from the first group of video information after the input interface receives a selection to remove the one video information from the first group of video information associated with the first user profile, ...180

12. [21k] wherein, upon the one video information being removed from the first group of video information, the one video information continues to be included in the second group of video information for the second user profile and the second group of thumbnails continues to display a thumbnail corresponding to the one video information when the second character is selected,.....180

13. [21l] wherein the processor decrypts second video information corresponding to a selected thumbnail when the input interface receives a selection of desired video information based on a selection of a thumbnail from the first group of thumbnails, and 180

14. [21m] wherein the display displays the decrypted video information. 180

G. Claim 22. The information processing apparatus of claim 21, further comprising: an antenna for wirelessly receiving the first video information. 181

H. Claim 23. The information processing apparatus of claim 21, wherein any user can delete stored video information regardless of a user profile from the plurality of user profiles that was used to record the stored video information. 181

I. Claim 24. The information processing apparatus of claim 21, wherein the processor generates a list of video information based on preferences of a user determined by a user selections of thumbnails from the first or second group of thumbnails. 181

J. Claim 25 182

1. [25a] The information processing apparatus of claim 21, wherein the processor generates a list of video information based on preferences of a user determined by a user selections of thumbnails associated with the first video information, the list including third and fourth video information, and, ...182

2. [25b] in response to the input interface receiving a selection of the list by the user, the display displays only those thumbnails that correspond to the third and fourth video information and no other thumbnails associated with video information of other users. 182

XII. GROUND 7: HORN, BAUMGARTNER, CANDELORE & WINTV.....182

A. Motivation to Combine WinTV with the Horn/Baumgartner/Candelore Combination 182

B. Claim 20 184

1. [20a] The method of claim 16, further comprising: generating on screen display information, ...184

2. [20b] wherein the first video information includes third video information such that, upon selection for playback, the third video information is outputted with the on screen display information for display of the third video information and the on screen display information. 184

C. Claim 26 186

1. [26a] The information processing apparatus of claim 21, further comprising: an analog to digital converter for converting analog audio information being recorded into digital audio information; 186

2. [26b] a compressor for compressing the first video information; 187

3. [26c] a decoder for decoding, during playback, audio and video information included in the first video information and selected for reproduction by the user; and 188

4. [26d] a digital to analog converter for converting at least the digital audio information into audio information during playback. 188

D. Claim 27 189

1. [27a] The information processing apparatus of claim 21, further comprising: an on screen display generator generating on screen display information, ...189

2. [27b] wherein the first video information includes third video information such that, upon selection for playback, the third video information is outputted with the on screen display information for display of the third video information and the on screen display information. 189

XIII. GROUND 8: HORN, BAUMGARTNER, CANDELORE, WINTV, CHAO 189

A. Motivation to Combine Chao with Horn, Baumgartner, Candelore and WinTV 189

B. Claims 16-27 195

XIV. GROUND 9: KAPLAN, BRYANT, WONG AND CANDELORE.....195

A. Motivation to Combine 195

1. Kaplan and Bryant 195

2. Kaplan/Bryant and Wong 195

B. Claim 16 199

1. [16pre] A method for reproducing video content associated with user profiles being implemented on an information processing apparatus, comprising: 199

2. [16a] receiving, via a network, first video information wirelessly from a device external to the information processing apparatus, the first video information being received including second video information that is encrypted; 199

3. [16b] displaying, on a display device, a first user interface for a user to select a user profile from among a plurality of user profiles including a first user profile associated with a first character and a second user profile associated with a second character, ...202

4. [16c] the plurality of user profiles being associated with video information and the first user interface including an option for a user to select the first user profile from the plurality of user profiles by selecting the first character; 206

5. [16d] receiving a selection of the first user profile;.....207

6. [16e] displaying, in response to the selection, a second user interface for a user to select desired video information to be reproduced from among the first video information,.....208

7. [16f] the second user interface being associated with the first user profile and displaying the first character, the first character associated with a first group of video information and indicating an identity of the user of the first user profile,.....210

8. [16g] the second user interface further displaying thumbnails corresponding to the first group of video information;.....213

9. [16h] displaying the second character and a second group of thumbnails corresponding to a second group of video information associated with the second user profile when the second character is selected, ...215

10. [16i] the first group of video information and the second group of video information including one video information that is the same;.....219

11. [16j] receiving a selection to remove the one video information from the first group of video information associated with the first user profile; 219

12. [16k] removing the one video information from the first group of video information, wherein, upon the one video information being removed from the first group of video information, the one video information continues to be included in the second group of video information for the second user profile and the second group of thumbnails continues to display a thumbnail corresponding to the one video information when the second character is selected;.....219

13. [16l] receiving a selection of desired video information based on a selection of a thumbnail from the first group of thumbnails, the desired video information included in the second video information;.....225

14. [16m] decrypting video information corresponding to the selected thumbnail; and displaying the decrypted video information.....227

C. Claim 17. The method of claim 16, wherein any user can delete stored video information regardless of a user profile from the plurality of user profiles that was used to record the stored video information. 227

D. Claim 18. The method of claim 16, further comprising: generating a list of video information based on preferences of a user determined by a user selections of thumbnails from the first or second group of thumbnails. 227

E. Claim 19 228

1. [19a] The method of claim 16, further comprising: generating a list of video information based on preferences of a user determined by a user selections of thumbnails associated with the first video information, the list including third video information; 228

2. [19b] receiving a selection of the list by the user; and in response to the selection of the list, displaying the thumbnails that correspond to the third video information and no other thumbnails associated with video information of other users.....229

F. Claim 21 229

1. [21pre] An information processing apparatus comprising: ...229

2. [21a] a network interface receiving first video information wirelessly from a device external to the information processing apparatus, the first video information being received including second video information that is encrypted; 230

3. [21b] a display displaying a first user interface for a user to select a user profile from among a plurality of user profiles including a first user profile associated with a first character and a second user profile associated with a second character, ...231

4. [21c] the plurality of user profiles being associated with video information and the first user interface including an option for a user to select the first user profile from the plurality of user profiles by selecting the first character; 231

5. [21d] an input interface receiving a selection of the first user profile at a first time and a selection of the second character at a second time, ...231

6. [21e] wherein, in response to the selection of the first user profile, the display displays a second user interface for a user to select desired video information to be reproduced from among the first video information,.....231

7. [21f] the second user interface being associated with the first user profile and displaying the first character, the first character associated with a first group of video information and indicating an identity of the user which the first user profile is associated with,.....231

8. [21g] the second user interface further displaying thumbnails corresponding to the first group of video information, and 231

9. [21h] wherein, in response to the selection of the second user profile, the display displays the second character and a second group of thumbnails corresponding to a second group of video information associated with the second user profile when the second character is selected, ...232

10. [21i] the first group of video information and the second group of video information including one video information that is the same; and 232

11. [21j] a processor for removing one video information from the first group of video information after the input interface receives a selection to remove the one video information from the first group of video information associated with the first user profile, ...232

12. [21k] wherein, upon the one video information being removed from the first group of video information, the one video information continues to be included in the second group of video information for the second user profile and the second group of thumbnails continues to display a thumbnail corresponding to the one video information when the second character is selected,.....232

13. [21l] wherein the processor decrypts second video information corresponding to a selected thumbnail when the input interface receives a selection of desired video information based on a selection of a thumbnail from the first group of thumbnails, and.....232

14. [21m] wherein the display displays the decrypted video information.....233

G. Claim 22. The information processing apparatus of claim 21, further comprising: an antenna for wirelessly receiving the first video information. 233

H. Claim 23. The information processing apparatus of claim 21, wherein any user can delete stored video information regardless of a user profile from the plurality of user profiles that was used to record the stored video information. 233

I. Claim 24. The information processing apparatus of claim 21, wherein the processor generates a list of video information based on preferences of a user determined by a user selections of thumbnails from the first or second group of thumbnails. 233

J. Claim 25 234

1. [25a] The information processing apparatus of claim 21, wherein the processor generates a list of video information based on preferences of a user determined by a user selections of thumbnails associated with the first video information, the list including third and fourth video information, and, ...234

2. [25b] in response to the input interface receiving a selection of the list by the user, the display displays only those thumbnails that correspond to the third and fourth video information and no other thumbnails associated with video information of other users. 234

XV. GROUND 10: KAPLAN, BRYANT, WONG, CANDELORE AND WINTV 235

A. Motivation to Combine WinTV with the Kaplan-Bryant-Wong-Candelore Combination 235

B. Claims 20, 26, 27 236

XVI. SECONDARY CONSIDERATIONS 236

XVII. CONCLUSION 237

INDEX OF EXHIBITS

Exhibit No.	Description
1001	U.S. Patent No. 11,017,815
1002	File History of U.S. Pat. 11,017,815
1003	Declaration of Dr. Benjamin Bederson
1004	CV of Dr. Benjamin Bederson
1005	U.S. Patent No. 7,275,063 (“Horn”)
1006	U.S. Patent No. 7,970,240 (“Chao”)
1007	U.S. Patent No. 7,650,361 (“Wong”)
1008	Reserved
1009	*Fandango Media, LLC v. Maxell, Ltd.*, IPR2018-01432, Paper 32 (PTAB Feb. 10, 2020) (“01432FWD”)
1010	WinTV Installation and Reference Manual (June 30, 1999) (“WinTV”)
1011	Archived Specifications - WinTV PCI boards including the WinCast/TV and WinTV-pci (November 10, 1999) (https://web.archive.org/web/19991110153658/http://hauppauge.com:80/html/wc_data.htm)
1012	Bt848/848A/849A - Single-Chip Video Capture for PCI – Datasheet (“BT848”)
1013	U.S. Patent Application Publication No. 20030174844A1 (“Candelore”)
1014	U.S. Patent Application Publication No. 20010056434A1 (“Kaplan”)
1015	U.S. Patent Application Publication No. 20040201691 (“Bryant”)
1016	U.S. Patent Application Publication No. 20050160458A1 (“Baumgartner”)
1017	Appendix 5 to PO’s January 11, 2024 Infringement Contentions
1018	U.S. Patent No. 6,259,418 (“Jones”)
1019	U.S. Patent No. 5,911, 129 (“Towell”)
1020	JP-A-2000-152180
1021	Machine Translation of JP-A-2000-152180
1022	U.S. Patent No. RE32,632 to Atkinson
1023	Brent Ethington, *Introducing Microsoft Windows 95*, Microsoft Press (1995), with authenticating declaration of Carmen Debord
1024	U.S. Patent No. 6,493,006 to Gourdol et al.
1025	Microsoft Computer Dictionary, 4th Ed., Microsoft Press (1999)
1026	James Cohoon & Jack Davidson, C++ Program Design: An

Exhibit No.	Description
	Introduction to Programming and Object-Oriented Design, 3rd Ed., McGraw Hill (2002)
1027	George W. Furnas and Jeff Zacks, 1994, *Multitrees: Enriching and Reusing Hierarchical Structure*, In Proceedings of the SIGCHI Conference on Human Factors in Computer Systems (CHI 1994), Beth Adelson, Susan Dumais, and Judith Olson (Eds.), ACM, New York, NY, USA, 330-336. DOI http://dx.doi.org/10.1145/191666.191778, with authenticating declaration of Scott Delman.
1028	U.S. Patent Application Publication No. 2004/0064476 to Rounds ("Rounds")
1029	U.S. Patent Application Publication No. 2002/0082730 to Capps et al. ("Capps")
1030	U.S. Patent No. 6,166,735 to Dom et al. ("Dom")
1031	U.S. Patent No. 5,884,056 to Steele ("Steele")
1032	U.S. Patent No. 5,442,744 to Piech et al. ("Piech")
1033	U.S. Patent Application Publication No. 2006/0107289 to DeYonker et al. ("DeYonker")
1034	Benjamin B. Bederson, 2001, PhotoMesa: A Zoomable Image Browser Using Quantum Treemaps and Bubblemaps, In Proceedings of the 14th annual ACM symposium on User Interface Software and Technology (UIST 2001), ACM, New York, NY, USA, 71-80. DOI http://dx.doi.org/10.1145/502348.502359
1035	U.S. Patent No. 6,609,253 to Swix et al. ("Swix")
1036	U.S. Patent Application Publication No. 2004/0078383 to Mercer et al. ("Mercer")
1037	WIPO Patent Publication No. WO 02/32122
1038	U.S. Patent No. 5,767,897
1039	"Windows XP Media Center Exposed" (AnandTech, January 8, 2003)
1040	File History of U.S. Patent No. 10,679,674
1041	File History of U.S. Patent No. 10,199,072
1042	File History of U.S. Patent No. 9,818,449
1043	File History of U.S. Patent No. 9,384,783
1044	File History of U.S. Patent No. 8,644,684
1045	File History of U.S. Patent No. 7,613,383
1046	Ex. 2002 from IPR2018-01432

Exhibit No.	Description
1047	Excerpt from American Heritage Dictionary (4th ed. 2000)
1048	Excerpt from Microsoft Computer Dictionary (5th ed. 2002)
1049	U.S. Patent No. 7,292,692 to Bonan et al. ("Bonan")
1050	Printout of https://www.atsc.org/news/security-content-protection-high-priorities-for-nextgen-tv/ (visited April 18, 2024)

TABLE OF CLAIMS

[1pre] An information processing apparatus comprising:
[1a] a network interface;
[1b] a recording medium on which is stored a plurality of video information including first video information received wirelessly by the network interface over a network from another information processing apparatus,
[1c] wherein at least some of the plurality of video information is associated with a user profile;
[1d] a display; and
[1e] a processor for controlling the display to display:
[1f] a first area including a first character associated with a first group of video information for a first classification and a second character associated with a second group of video information for a second classification different from the first classification,
[1g] the first group of video information being configured to allow a user to edit,
[1h] wherein the first group of video information and the second group of video information are part of the plurality of stored video information, and
[1i] a second area displaying thumbnails corresponding to at least a portion of the plurality of stored video information,
[1j] wherein user selection of the first character enables the display of a first group of thumbnails corresponding to the first group of video information in the second area,
[1k] wherein user selection of the second character enables the display of a second group of thumbnails corresponding to the second group of video information in the second area,
[1l] wherein, upon one video information stored on the recording medium included in both the first group of video information and the second group of video information being deleted from the first group of video information, the one video information continues to be included in the second group of video information and
[1m] the processor controls the display to display a thumbnail corresponding to the one video information as one of the second group of thumbnails when the second character is selected.
[2] The information processing apparatus of claim 1, further comprising: wherein the processor generates a group of video information based on user preferences determined by the user selections of the video information, and wherein, upon user selection of the group, the processor controls the display to display thumbnails that correspond to the video information and no other thumbnails associated with video information of other users.

[3] The information processing apparatus of claim 1, further comprising: an antenna for wirelessly receiving the first video information from the other information processing apparatus.
[4a] The information processing apparatus of claim 1, wherein the plurality of stored video information includes third video information recorded by the information processing apparatus, fourth video information, and fifth video information,
[4b] wherein the display displays a user interface having thumbnails corresponding to each of the third, fourth, and fifth video information.
[5] The information processing apparatus of claim 4, wherein the display displays the third, fourth, and fifth video information according to predetermined playback sequence.
[6a] The information processing apparatus of claim 1, wherein the plurality of stored video information includes third video information, fourth video information, and fifth video information,
[6b] wherein the plurality of stored video information includes management information corresponding to the third, fourth, and fifth video information,
[6c] wherein the management information includes filename information and timing information for each of the third, fourth, and fifth video information such that when the third, fourth, and fifth video information is stored in the recording medium the filename information is updated according to a predetermined sequence.
[7a] The information processing apparatus of claim 1, further comprising: an analog to digital converter for converting analog audio information being recorded into digital audio information;
[7b] a compressor for compressing the plurality of video information including digital video information and the digital audio information;
[7c] a decoder for decoding, during playback, the compressed digital video information and the compressed digital audio information included in the plurality of stored video information and selected for reproduction by the user; and
[7d] a digital to analog converter for converting at least the decoded digital audio information into analog audio information during playback.
[8a] The information processing apparatus of claim 1, further comprising: an on screen display generator generating on screen display information,
[8b] wherein the plurality of stored video information includes third video information such that, upon selection for playback, the third video information is outputted with the on screen display information for display of the third video information and the on screen display information.

[9pre] An information processing method implemented on an information processing apparatus, the information processing method comprising:
[9a] storing a plurality of video information including first video information received wirelessly by a network interface over a network from another information processing apparatus,
[9b] wherein at least some of the plurality of video information is associated with a user profile; and
[9c] displaying:
[9d] a first area including a first character associated with a first group of video information for a first classification and a second character associated with a second group of video information for a second classification different from the first classification,
[9e] the first group of video information being configured to allow a user to edit,
[9f] wherein the first group of video information and the second group of video information are part of the plurality of stored video information, and
[9g] a second area displaying thumbnails corresponding to at least a portion of the plurality of stored video information,
[9h] wherein user selection of the first character enables the display of a first group of thumbnails corresponding to the first group of video information in the second area, and
[9i] wherein user selection of the second character enables the display of a second group of thumbnails corresponding to the second group of video information in the second area;
[9j] upon one video information stored on the recording medium included in both the first group of video information and the second group of video information being deleted from the first group of video information, the one video information continues to be included in the second group of video information,
[9k] and displaying a thumbnail corresponding to the one video information as one of the second group of thumbnails when the second character is selected;
[9l] wherein the processor generating a group of video information based on user preferences determined by the user selections of the video information, and
[9m] upon user selection of the group, displaying thumbnails that correspond to the video information and no other thumbnails associated with video information of other users.
[10] The information processing method of claim 9, further comprising: wirelessly receiving the first video information from the other information processing apparatus via an antenna of the information processing apparatus.

[11a] The information processing method of claim 9, wherein the plurality of stored video information includes third video information recorded by the information processing apparatus, fourth video information, and fifth video information,
[11b] wherein the information processing apparatus displays a user interface having thumbnails corresponding to each of the third, fourth, and fifth video information.
[12] The information processing method of claim 11, wherein the information processing apparatus displays the third, fourth, and fifth video information according to predetermined playback sequence.
[13pre] The information processing method of claim 9,
[13a] wherein the plurality of stored video information includes third video information, fourth video information, and fifth video information,
[13b] wherein the plurality of stored video information includes management information corresponding to the third, fourth, and fifth video information,
[13c] wherein the management information includes filename information and timing information for each of the third, fourth, and fifth video information such that when the third, fourth, and fifth video information is stored in the recording medium the filename information is updated according to a predetermined sequence.
[14a] The information processing method of claim 9, further comprising: converting, by an analog to digital converter of the information processing apparatus, analog audio information being recorded into digital audio information;
[14b] compressing, by a compressor of the information processing apparatus, the plurality of video information including digital video information and the digital audio information;
[14c] decoding, during playback and by a decoder of the information processing apparatus, the compressed digital video information and the compressed digital audio information included in the plurality of stored video information and selected for reproduction by the user; and
[14d] converting, by a digital to analog converter of the information processing apparatus, at least the decoded digital audio information into analog audio information during playback.
[15a] The information processing method of claim 9, further comprising: generating, by the information processing apparatus, on screen display information,
[15b] wherein the plurality of stored video information includes third video information such that, upon selection for playback, the third video information is

outputted with the on screen display information for display of the third video information and the on screen display information.
[16pre] A method for reproducing video content associated with user profiles being implemented on an information processing apparatus, comprising:
[16a] receiving, via a network, first video information wirelessly from a device external to the information processing apparatus, the first video information being received including second video information that is encrypted;
[16b] displaying, on a display device, a first user interface for a user to select a user profile from among a plurality of user profiles including a first user profile associated with a first character and a second user profile associated with a second character,
[16c] the plurality of user profiles being associated with video information and the first user interface including an option for a user to select the first user profile from the plurality of user profiles by selecting the first character;
[16d] receiving a selection of the first user profile;
[16e] displaying, in response to the selection, a second user interface for a user to select desired video information to be reproduced from among the first video information,
[16f] the second user interface being associated with the first user profile and displaying the first character, the first character associated with a first group of video information and indicating an identity of the user of the first user profile,
[16g] the second user interface further displaying thumbnails corresponding to the first group of video information;
[16h] displaying the second character and a second group of thumbnails corresponding to a second group of video information associated with the second user profile when the second character is selected,
[16i] the first group of video information and the second group of video information including one video information that is the same;
[16j] receiving a selection to remove the one video information from the first group of video information associated with the first user profile;
[16k] removing the one video information from the first group of video information, wherein, upon the one video information being removed from the first group of video information, the one video information continues to be included in the second group of video information for the second user profile and the second group of thumbnails continues to display a thumbnail corresponding to the one video information when the second character is selected;
[16l] receiving a selection of desired video information based on a selection of a thumbnail from the first group of thumbnails, the desired video information included in the second video information;

[16m] decrypting video information corresponding to the selected thumbnail; and displaying the decrypted video information.
[17] The method of claim 16, wherein any user can delete stored video information regardless of a user profile from the plurality of user profiles that was used to record the stored video information.
[18] The method of claim 16, further comprising: generating a list of video information based on preferences of a user determined by a user selections of thumbnails from the first or second group of thumbnails.
[19a] The method of claim 16, further comprising: generating a list of video information based on preferences of a user determined by a user selections of thumbnails associated with the first video information, the list including third video information;
[19b] receiving a selection of the list by the user; and in response to the selection of the list, displaying the thumbnails that correspond to the third video information and no other thumbnails associated with video information of other users.
[20a] The method of claim 16, further comprising: generating on screen display information,
[20b] wherein the first video information includes third video information such that, upon selection for playback, the third video information is outputted with the on screen display information for display of the third video information and the on screen display information.
[21pre] An information processing apparatus comprising:
[21a] a network interface receiving first video information wirelessly from a device external to the information processing apparatus, the first video information being received including second video information that is encrypted;
[21b] a display displaying a first user interface for a user to select a user profile from among a plurality of user profiles including a first user profile associated with a first character and a second user profile associated with a second character,
[21c] the plurality of user profiles being associated with video information and the first user interface including an option for a user to select the first user profile from the plurality of user profiles by selecting the first character;
[21d] an input interface receiving a selection of the first user profile at a first time and a selection of the second character at a second time,
[21e] wherein, in response to the selection of the first user profile, the display displays a second user interface for a user to select desired video information to be reproduced from among the first video information,

[21f] the second user interface being associated with the first user profile and displaying the first character, the first character associated with a first group of video information and indicating an identity of the user which the first user profile is associated with,
[21g] the second user interface further displaying thumbnails corresponding to the first group of video information, and
[21h] wherein, in response to the selection of the second user profile, the display displays the second character and a second group of thumbnails corresponding to a second group of video information associated with the second user profile when the second character is selected,
[21i] the first group of video information and the second group of video information including one video information that is the same; and
[21j] a processor for removing one video information from the first group of video information after the input interface receives a selection to remove the one video information from the first group of video information associated with the first user profile,
[21k] wherein, upon the one video information being removed from the first group of video information, the one video information continues to be included in the second group of video information for the second user profile and the second group of thumbnails continues to display a thumbnail corresponding to the one video information when the second character is selected,
[21l] wherein the processor decrypts second video information corresponding to a selected thumbnail when the input interface receives a selection of desired video information based on a selection of a thumbnail from the first group of thumbnails, and
[21m] wherein the display displays the decrypted video information.
[22] The information processing apparatus of claim 21, further comprising: an
antenna for wirelessly receiving the first video information.
[23] The information processing apparatus of claim 21, wherein any user can delete stored video information regardless of a user profile from the plurality of user profiles that was used to record the stored video information.
[24] The information processing apparatus of claim 21, wherein the processor generates a list of video information based on preferences of a user determined by a user selections of thumbnails from the first or second group of thumbnails.
[25a] The information processing apparatus of claim 21, wherein the processor generates a list of video information based on preferences of a user determined by a user selections of thumbnails associated with the first video information, the list including third and fourth video information, and,

[25b] in response to the input interface receiving a selection of the list by the user, the display displays only those thumbnails that correspond to the third and fourth video information and no other thumbnails associated with video information of other users.
[26a] The information processing apparatus of claim 21, further comprising: an analog to digital converter for converting analog audio information being recorded into digital audio information;
[26b] a compressor for compressing the first video information;
[26c] a decoder for decoding, during playback, audio and video information included in the first video information and selected for reproduction by the user; and
[26d] a digital to analog converter for converting at least the digital audio information into audio information during playback.
[27a] The information processing apparatus of claim 21, further comprising: an on screen display generator generating on screen display information,
[27b] wherein the first video information includes third video information such that, upon selection for playback, the third video information is outputted with the on screen display information for display of the third video information and the on screen display information.

I, Benjamin B. Bederson, declare as follows:

I. INTRODUCTION AND SUMMARY OF OPINIONS

A. Introduction

1. I have been retained by counsel for Petitioners, Samsung Electronics Co. Ltd. and Samsung Electronics America, Inc. ("Petitioners") to serve as an expert witness.

2. I understand that this declaration will be submitted in support of two Petitions for *Inter Partes* Review (IPR) filed by Petitioners, which collectively challenge claims 1-27 (the "Challenged Claims") of U.S. Patent No. 11,017,815 (the "'815 patent"). The '815 patent is a descendant of an earlier patent, U.S. Patent No. 9,384,783 (the "'783 Patent") for which I provided an opinion in IPR2018-01432 on behalf of Fandango in which the Board found all challenged claims unpatentable. *See* the 01432FWD, EX1009.

3. The facts and opinions expressed herein are true and accurate to the best of my knowledge and understanding based on the information I have reviewed to date.

B. Summary of Opinions

4. It is my opinion that the Challenged Claims of the '815 patent would have been obvious to a person of ordinary skill in the art as of the earliest priority date to which those claims are entitled based on the following Grounds.

Ground	Claims	Stat. Basis	Prior Art
1	1-6, 9-13	35 U.S.C. § 103[1]	Horn, and Baumgartner
2	7, 8, 14, 15	35 U.S.C. § 103	Horn, Baumgartner, and WinTV
3	1-15	35 U.S.C. § 103	Horn, Baumgartner, WinTV, and Chao
4	1-6, 9-13	35 U.S.C. § 103	Kaplan and Bryant
5	7, 8, 14, 15	35 U.S.C. § 103	Kaplan, Bryant, and WinTV
6	16-19, 21-25	35 U.S.C. § 103	Horn, Baumgartner, and Candelore
7	20, 26, 27	35 U.S.C. § 103	Horn, Baumgartner, Candelore, and WinTV
8	16-27	35 U.S.C. § 103	Horn, Baumgartner, Candelore, WinTV, and Chao
9	16-19, 21-25	35 U.S.C. § 103	Kaplan, Bryant, Wong, and Candelore
10	20, 26, 27	35 U.S.C. § 103	Kaplan, Bryant, Wong, Candelore, and WinTV

5. The basis for my opinion is set forth below.

[1] I have applied pre-AIA 35 U.S.C. § 103 in Grounds 1-8 due to the ’815 patent’s earliest possible claimed U.S. priority date of December 2, 2004), but post-AIA 35 U.S.C. § 103 is applied to Grounds 9-10 because there are at least 3 claim terms not supported by any priority application filed before June 8, 2016 as established herein. To the extent that post-AIA 35 U.S.C. § 103 applies in Grounds 1-8 because any claim of the ’815 patent is not supported by any pre-March 16, 2013 application, the result is the same.

II. QUALIFICATIONS AND BACKGROUND

A. Qualifications

6. My *curriculum vitae* (CV) detailing my educational background and professional experience is enclosed as Appendix A. Appendix A also includes a list of my publications and the cases in which I have testified at deposition, hearing, or trial during the past five years.

7. I received a Bachelor of Science degree in Computer Science with a minor in Electrical Engineering from Rensselaer Polytechnic Institute ("RPI") in 1986. I received a Master of Science degree and a Ph.D. in Computer Science from New York University ("NYU") in 1989 and 1992, respectively.

8. Since 1998, I have been a Professor of Computer Science at the University of Maryland ("UMD"), where I have joint appointments at the Institute for Advanced Computer Studies and the College of Information Studies (Maryland's "iSchool"). I was also Associate Provost of Learning Initiatives and Executive Director of the Teaching and Learning Transformation Center from 2014–2018. I am a member and previous director of the Human-Computer Interaction Lab ("HCIL"), the oldest and one of the best known Human-Computer Interaction research groups in the country. I am co-founder and Chief Executive Officer of the J.S. Bryant School, a therapeutic high school to open in Fall 2025. I was also co-founder and Chief Scientist of Zumobi, Inc. from 2006 to 2014, a

Seattle-based startup that is a publisher of content applications and advertising platforms for smartphones. I am also co-founder and co-director of the International Children's Digital Library ("ICDL"), a web site launched in 2002 that provides the world's largest collection of freely available online children's books from around the world with an interface aimed to make it easy for children and adults to search and read children's books online. I was also co-founder and Chief Technology Officer of Hazel Analytics from 2014 - 2023, a data analytics company. In addition, I have for more than 15 years consulted for numerous companies in the area of user interfaces, including Logitech, Microsoft, the Palo Alto Research Center, Sony, Lockheed Martin, and NASA Goddard Space Flight Center.

9. For more than 30 years, I have studied, designed, and worked in the field of computer science and human-computer interaction. My experience includes 30 years of teaching and research, with research interests in human-computer interaction and the software and technology underlying today's interactive computing systems. This includes the design and implementation of software applications on mobile devices, including smart phones and PDAs, such as my work on DateLens, LaunchTile, and StoryKit described below.

10. At UMD, my research is in the area of Human-Computer Interaction ("HCI"), a field that relates to the development and understanding of computing

systems to serve users' needs. Researchers in this field are focused on making universally usable, useful, efficient, and appealing systems to support people in their wide range of activities. My approach is to balance the development of innovative technology that serves people's practical needs. Example systems following this approach that I have built include PadPrints (1998 software that provided a visual map of an end user's web browsing history), PhotoMesa (2001 software for end users to browse personal photos including an interface that included animated zooming of image thumbnails), DateLens (2002 software for end users to use their mobile devices to efficiently access their calendar information), LaunchTile (2005 "home screen" software for mobile devices to allow users to navigate apps in a zoomable environment), SpaceTree (2001 software for end users to efficiently browse very large hierarchies), ICDL (as described above), and StoryKit (a 2009 iPhone app for children to create stories).

11. In 2001, I built CounterPoint as a plug-in for PowerPoint. CounterPoint was software that provided paths through PowerPoint slides that were laid out in a zoomable two-dimensional space. As I explained in a 2002 paper[2] and depicted in

[2] Lance Good and Benjamin B. Bederson. 2002. Zoomable user interfaces as a medium for slide show presentations. Information Visualization 1, 1 (March 2002), 35–49. https://doi.org/10.1057/palgrave/ivs/9500004

the figure from that paper below, this decoupling of paths from content avoids duplication of data wherein a single slide can be accessed through multiple paths.

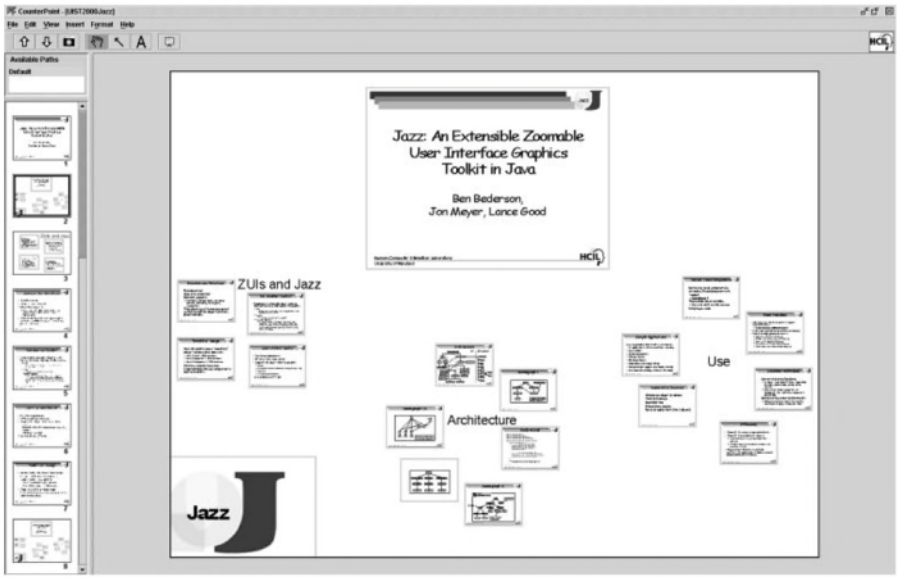

Figure 4 A screen shot of CounterPoint in spatial arrangement mode. The panel on the right, the 'Editing Canvas', is used to modify the positions and magnifications of pre-authored slides. The panel on the left is used to edit paths through the presentation.

12. LaunchTile led to my creation of Zumobi in 2006, where I was responsible for investigating new software platforms and developing new user interface designs that provided efficient and engaging interfaces to permit end users to access a wide range of content on mobile platforms (including the iPhone and Android-based devices). For example, I designed and implemented software called "Ziibii," a "river" of news for iPhone, software called "ZoomCanvas," a zoomable user interface for several iPhone apps, and iPhone apps including "Inside Xbox" for Microsoft and Snow Report for REI. At the International Children's Digital Library (ICDL), I have since 2002 been the technical director responsible for the design and implementation of the web site, www.childrenslibrary.org

(originally at www.icdlbooks.org). In particular, I have been closely involved in designing the user interface as well as the software architecture for the web site since its inception in 2002. In 2007 and 2008, I wrote an app for Apple iOS called "ICDL on iPhone" which provided a zoomable interface for reading children's picture books from my International Children's Digital Library on iPhones. At the time, this was the only effort of its kind to provide the ability to read children's picture books on phones.

13. Beginning in the mid-1990s, I have been responsible for the design and implementation of numerous other web sites in addition to the ICDL. For example, I designed and built my own professional web site when I was an Assistant Professor of Computer Science at the University of New Mexico in 1995 and have continued to design, write the code for, and update both that site (which I moved to the University of Maryland in 1998, currently at http://www.cs.umd.edu/~bederson/) as well as numerous project web sites, such as Pad++, http://www.cs.umd.edu/hcil/pad++/. I received the Janet Fabri Memorial Award for Outstanding Doctoral Dissertation for my Ph.D. work in robotics and computer vision. I have combined my hardware and software skills throughout my career in Human-Computer Interaction research, building various interactive electrical and mechanical systems that couple with software to provide an innovative user experience.

14. My work has been published extensively in more than 140 technical publications, and I have given about 100 invited talks, including 9 keynote lectures. I have won a number of awards including the Brian Shackel Award for "outstanding contribution with international impact in the field of HCI" in 2007, and the Social Impact Award in 2010 from Association for Computing Machinery's ("ACM") Special Interest Group on Computer Human Interaction ("SIGCHI"). ACM is the primary international professional community of computer scientists, and SIGCHI is the primary international professional HCI community. I have been honored by both professional organizations. I am an "ACM Distinguished Scientist," which "recognizes those ACM members with at least 15 years of professional experience and 5 years of continuous Professional Membership who have achieved significant accomplishments or have made a significant impact on the computing field." I am a member of the "CHI Academy," which is described as follows: "The CHI Academy is an honorary group of individuals who have made substantial contributions to the field of human-computer interaction. These are the principal leaders of the field, whose efforts have shaped the disciplines and/or industry, and led the research and/or innovation in human-computer interaction." The criteria for election to the CHI Academy are: (1) cumulative contributions to the field; (2) impact on the field through

development of new research directions and/or innovations; and (3) influence on the work of others.

15. I have appeared on radio shows numerous times to discuss issues relating to user interface design and people's use and frustration with common technologies, web sites, and mobile devices. My work has been discussed and I have been quoted by mainstream media around the world over 120 times, including by the New York Times, the Wall Street Journal, the Washington Post, Newsweek, the Seattle Post-Intelligencer, the Independent, Le Monde, NPR's All Things Considered, New Scientist Magazine, and MIT's Technology Review.

16. I have designed, programmed, and publicly deployed dozens of user-facing software products that have cumulatively had millions of users.

17. I am the co-inventor of 14 U.S. patents and 20 U.S. patent applications. The patents are generally directed to user interfaces/experience with some directed to zooming and thumbnail images, including U.S. Patent No. 7,707,503 (issued 2010), entitled "Methods and systems for supporting presentation tools using zoomable user interfaces."

18. I am being compensated for my time in this case at the rate of $600.00 per hour. No part of my compensation is dependent on my opinions or on the outcome of this proceeding. I have no direct financial interest, beneficial or otherwise, in any of the parties to this review.

19. I consider myself to have at least the same level of skill and experience as the person of ordinary skill in the art (POSITA) to which the ’815 Patent is directed, and had so as of the time of the invention (approximately 2004).

B. Technology Background

20. The data management techniques of the ’815 Patent, including its use of menus, thumbnails, and pointers, were well known in the field by 2004. By this time, computers had long had the ability to display digital media (*e.g.*, graphics, audio, and video), and included numerous mechanisms for organizing and navigating such media.

1. Graphical User Interfaces (GUIs) & Displays of Video Information

21. In computing, a user interface is the boundary where interactions between humans and computers occur. An advancement in the way in which humans interact with computers – and particularly with respect to the old command-line interface was – was the Graphical User Interface (“GUI”). GUIs offer visual interfaces on display screens that are designed for simplicity and ease of learning. A common and well-known example of a GUI uses the “desktop metaphor,” where files and applications of the computer system are represented as graphical icons on a virtual desktop shown on the computer screen, and where the user interacts with those icons using a pointing device such as a mouse cursor. Windows 95 was one example of such a GUI:

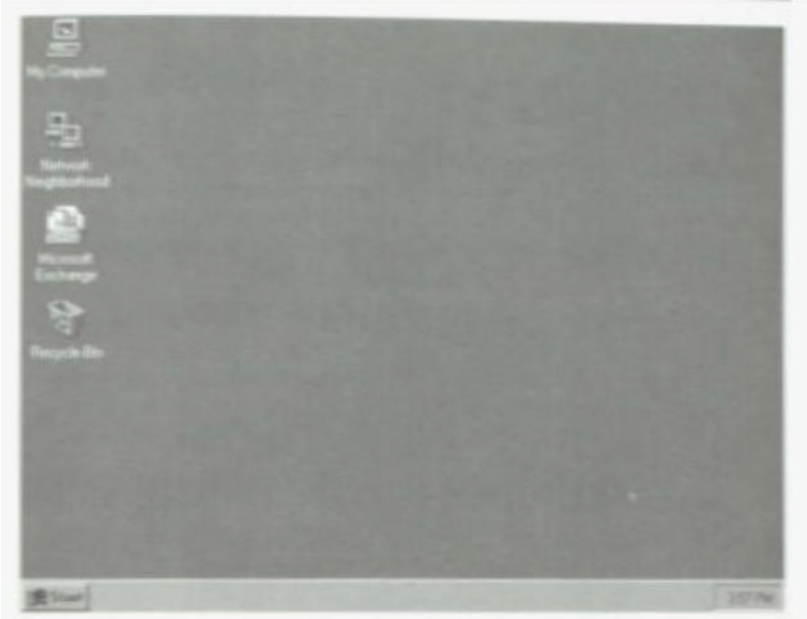

Figure 3. The desktop

EX1023, 24 (native p. 20-21), FIG. 3 ("After users start their computers, they are presented with the Windows 95 desktop shown in Figure 3. It's neat and clean and displays only a few graphical objects.") (Introducing Microsoft® Windows 95); *see also* EX1023, 32 (native p. 36) (illustrating an example of a window with a user's files).

22. One goal of many GUIs was to make the user interface more intuitive and easy to learn by implementing concepts that are analogous to the real world – dragging an icon across the computer screen "desktop" and dropping the icon into a "folder," for example, resembles the physical act of placing a document in a folder that a user is already familiar with. GUIs displayed many kinds of information, including image thumbnails including the type or content of a file. *See, e.g.*, EX1023, 29 (native p. 30).

23. GUIs include numerous mechanisms that allow users to interact with and control the computer system. One of the most common of those mechanisms are "menus" that present options that can be selected by a user. Such menus date back over thirty years: "[a]ppropriate programming of the computer is provided such that a 'menu' bar 100 comprising a variety of command options indicated by titles (for example, T1, T2, T3 ... Tn), is displayed across the CRT screen or the like as shown in FIG. 14":

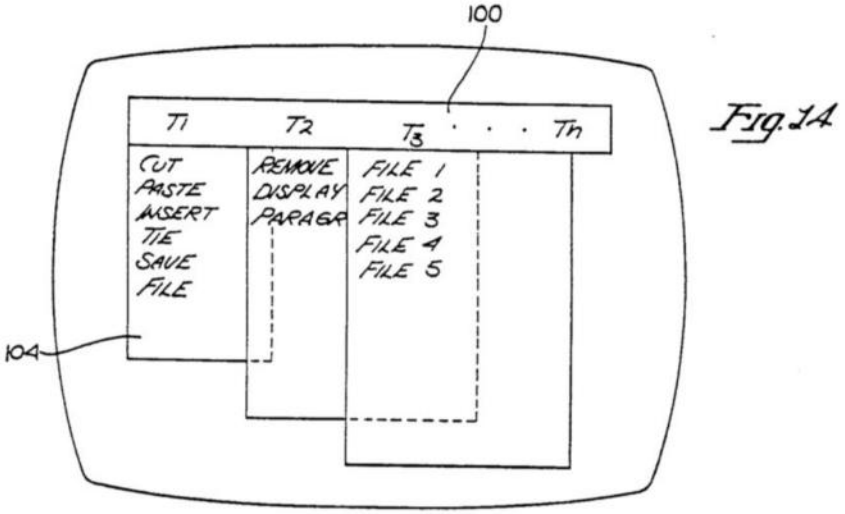

EX1022, 6:9-13, FIG. 14 (U.S. Patent No. RE32,632 to Atkinson).

24. Menus have taken many different forms, including pull-down menus, pop-up menus, menus with multiple areas, etc. *See, e.g.*, EX1024, 2:4-7 (U.S. Patent No. 6,493,006 to Gourdol et al.) (describing menus to "provide a simple, straightforward method for the user to view and choose commands that relate to an application running on the computer."). An example from the '006 Patent illustrates a "context" menu with two areas – a first area with options for "Cut",

"Copy", and "Bold", and a second area with options for "Help ...", "Speller", and "Mail to" :

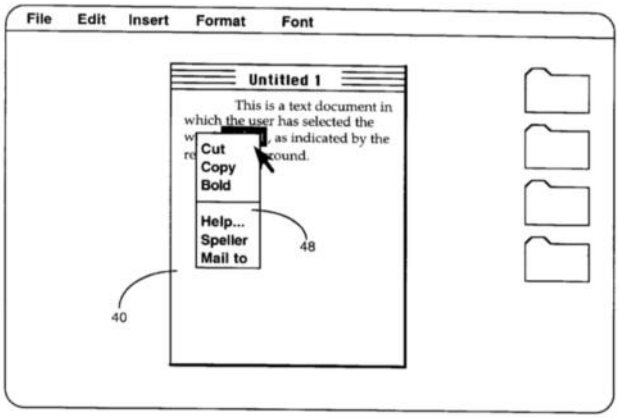

FIG. 5

EX1024, FIG. 5; *see also* EX1023, 25, 31-33 (native pp. 22, 34, 36 and 39) (illustrating various menus available in Windows 95).

2. Filing systems & Aliases/Links

25. By 2004, computers had long included mechanisms for organizing and navigating data, such as multimedia files. By way of example, Windows 95 supported the ability to create "shortcuts" to files. *See, e.g.*, EX1023, 32-33 (native pp. 37-39) ("Shortcuts: For Accessing Objects"). These shortcuts were interface elements that could be seen and manipulated within the "Explorer" file browser and provided references to the original files. Double-clicking on them would open the original file. *See* EX1023, 32 (native p. 37) ("Opening the shortcut opens the object that the shortcut is 'pointing' to."). Deleting them would leave the original file unaffected: "A shortcut can be deleted without affecting the object to which it points." EX1023, 33 (native p. 38).

26. As an example, the Windows 95 File Explorer could be used to display folders containing images, videos, documents, etc.:

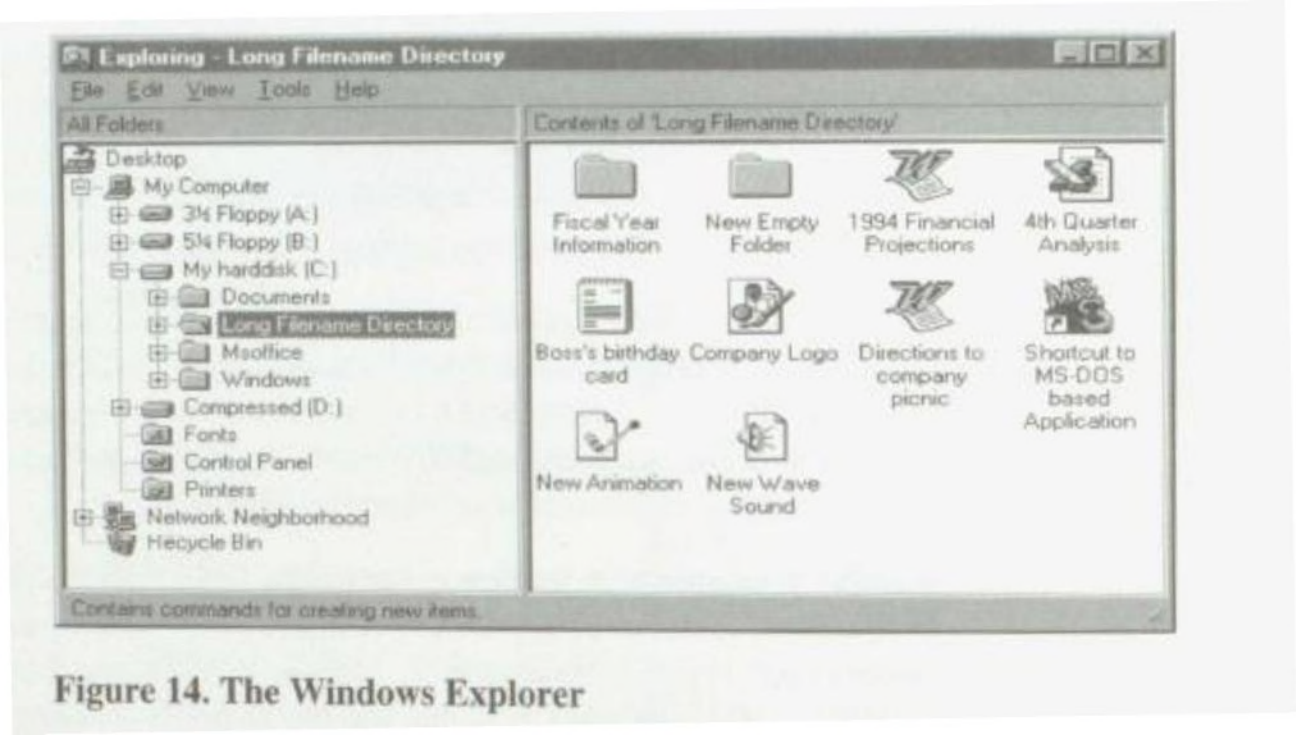

Figure 14. The Windows Explorer

EX1023, 32 (native p. 36). Similarly, the folders could contain shortcuts to the underlying files or applications. *See id*. ("Shortcut to MS-DOS..."). In Windows, the name of a shortcut as well as the icon used for the shortcut could be modified by the user. EX1023, 33-34 (native pp. 38-40). For instance, Windows 95 included

the ability to display the content of a file as an image thumbnail instead of a generic icon within Windows Explorer.[3]

3. Computer Pointers and Data Structures

27. The "shortcut" discussed above is a specific type of "pointer." A "pointer" refers to the idea of storing data in computer memory that indicates the location of other data. *See, e.g.*, EX1023, 32 (native p. 37). The concept of a "pointer" is not unique to Windows 95, and in fact is a foundational concept of computer science. *See, e.g.*, EX1025, 8 (native p. 348) (Microsoft Computer Dictionary); EX1026, 30 (native p. 616) (*C++ Program Design: An Introduction to Programming and Object-Oriented Design*). This is important because it is exceedingly common in computing systems to have data that needs to be used or shown in multiple places – and it is important to avoid duplicating that data. This need to avoid duplicating data is important for multiple reasons – for example, the original data may be large, and so it is important to be efficient. Also, the original data may be changed. If it were duplicated then when the original was changed, the

[3] This ability to display image thumbnails within Windows Explorer was off by default, but could be enabled by changing the Default value of the Registry Key "HKEY_CLASSES_ROOT\Paint.Pictures\DefaultIcon"to "%1".

copy would become out of date. It is the nature of pointers that when a pointer to an original object is deleted, the original object is unaffected.

28. Pointers are particularly important in the construction of computer systems because they enable another foundational concept called "data structures". Data structures are used in computing systems to organize data in a way that enables efficient access and modification of that data. Common data structures include lists and hierarchies of items. *See, e.g.*, EX1027.

29. One type of data structure is a "multitree" as described in a 1994 paper by Furnas and Zacks. EX1027 ("Multitrees: enriching and reusing hierarchical structure"). A multitree builds on the standard hierarchy that one would see in a computer file system such as with Windows 95. Section (i) of the figure below shows a standard hierarchy or "tree". The data items at the bottom of the tree could hold any kind of data, including files, images or video thumbnails.

30. Multitrees use pointers to allow an additional tree to be added on top of the existing data items. Section (ii) of the figure below illustrates an example where "Professor A" selects a subset of the data items in the existing tree to include in her or his syllabus. Section (iii) shows how "Professor B" could choose a different subset of the same data items for their (different) syllabus.

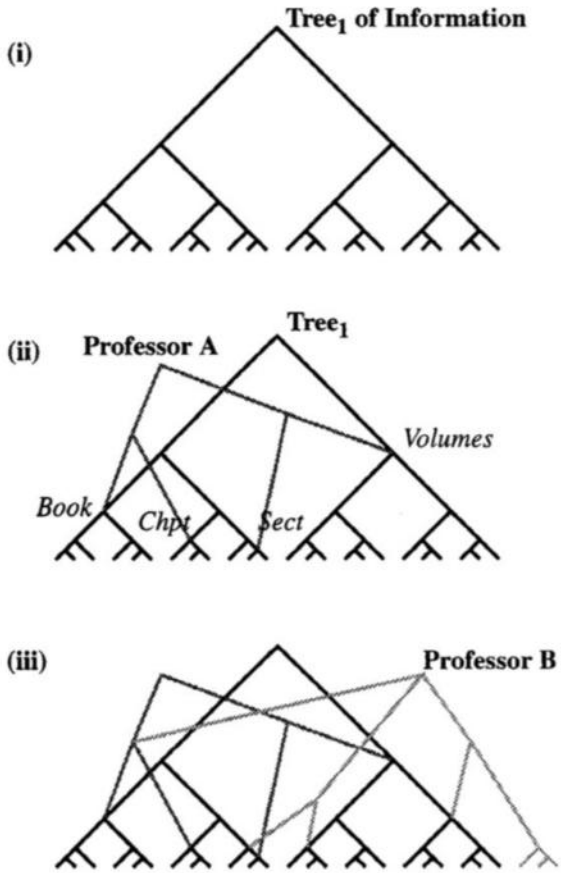

Figure 1 . Constructing a multitree - an example. Beginning with an initial tree of information, Professor A builds her course syllabus. In (a) she chooses a disjoint set of complete subtrees and adds new tree structure above them. Similarly, Professor B makes another, chooses fragments, including some of A's and some completely new ones, and builds a tree above to organize them.

EX1027, 5 (native p. 331). Multitrees can be used to represent aspects of the "independently editable" features allegedly claimed in the '815 Patent. *See* Section IV.C ("Prosecution History"). For instance, a "docs" folder could contain the original files ("402", "502", and "503") as illustrated in the figure below.

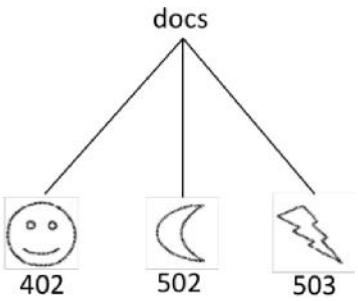

And then a multitree can be created to represent the "Mother" and "Father" folders (or playlists) as illustrated in this figure:

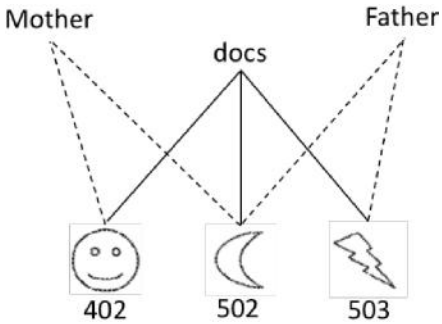

4. Digital Media and Playlists

31. Computers have long had the ability to display graphics, audio and video, and have had numerous mechanisms for organizing and navigating those media. This included the playback of videos stored on, or streamed by, a computer. *See, e.g.*, EX1014, FIG. 16, ¶¶2, 57; EX1028, ¶¶2-3; EX1029, FIG. 17B; EX1031, Abstract; EX1032, 2:27-42 and FIG. 1; EX1030, FIG. 4; EX1033, ¶17.

32. By the early 2000's, personal computers with basic operating systems had become powerful enough to use for digital media including music, pictures, and movies. *See id.*; *see also* EX1015, ¶¶37-41 and FIGS. 1 and 2; EX1031, Abstract; EX1032, FIG. 1 ("Player 11"); EX1030, 7:33-67, Dom Claim 1. That is,

it was well known that digital media, including videos, could be played back using a computer. *See id*.

33. As an example, a personal computer could be configured to function as a DVR. *See* EX1033, Abstract, ¶¶2-4, 15-17, 20-22 ("The recorded media content 140 includes TV programs that a viewer has recorded to watch at a later time. The DVR and playback application 136 also facilitates playback of the recorded media content 140 on the display 104."), ¶37 ("The 'My TV' UI screen 400 has a menu 402 of operational choices for the viewer, including...a listing of recorded TV programs stored on the device 102.... A set of six thumbnail images 404 representing the six most recently recorded TV programs are also depicted on the UI screen 400."), FIG. 1. Moreover, content could be accessed and played back using thumbnails corresponding to the video. *See id*.; EX1033, ¶26 ("With the handset 154, the viewer can select a thumbnail to cause the client device 102 (and namely, the DVR and playback application 136) to playback the recorded TV program associated with the thumbnail.").

34. As another example, software at that time could allow a user to display and navigate through representative images of their personal photos by

zooming in and out large layouts of photos as described in a 2001 paper. EX1034.[4] This software, called PhotoMesa, was unique because of the specific layout algorithm used to display many groups of photos on a single screen and because of the zooming navigation mechanism (see Figure 1 below), but the use of small thumbnail images to represent the underlying full image along with metadata to control display, search, and navigation of photos was already well known at that time.

[4] I authored the article entitled "PhotoMesa: A Zoomable Image Browser Using Quantum Treemaps and Bubblemaps" in 2001. I presented this article at the 2001 Association for Computing Machinery ("ACM") Symposium on User Interface Software and Technology ("UIST") in Orlando, Florida on November 11-14, 2001. The article was distributed no later than the last day of the conference, and was published by the ACM in the Proceedings of the 14th Annual Symposium on User Interface Software and Technology, New York, NY, USA (2001) (ISBN:1-58113-438-X). Exhibit 1034 is a true and correct copy of this article.

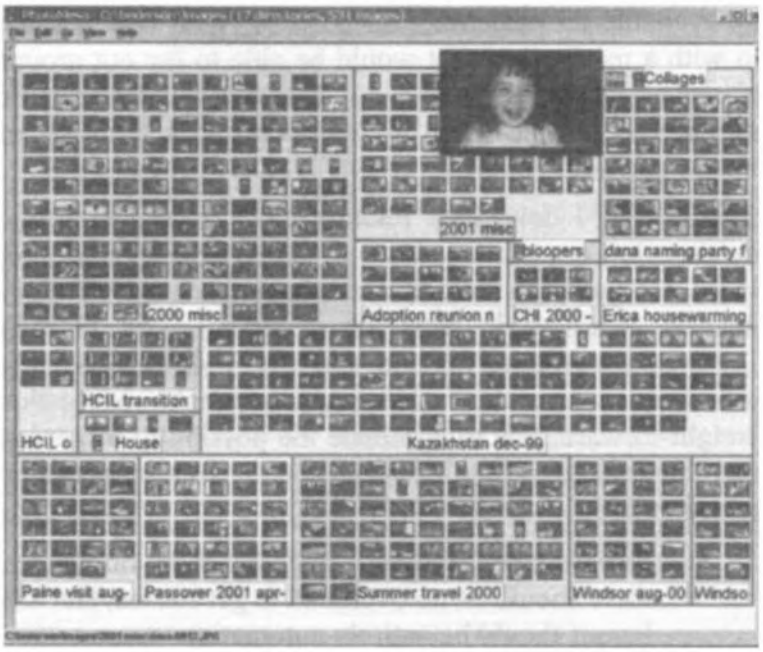

Figure 1: Screen snapshot of PhotoMesa with over 500 images in 17 groups.

EX1034, 1 (Figure 1).

35. For example, Kaplan (US2001/0056434A1) described "a multimedia management system for storing, manipulating, and displaying multimedia content." EX1014, ¶4; *see also* Section V.D. Similar to PhotoMesa, Kaplan displayed a grid of thumbnails representing not only photos but also frames from videos. Kaplan also describes the concept of a "Play List" which "records the order that a user selects video and/or audio files and allows them to be played back in sequence." EX1014, ¶6. These play lists are conceptually equivalent to the previously described "shortcuts", in that they are representations of underlying data that can be used to access that data – but without manipulating the underlying data. Kaplan goes on to say that "the Play List is created as the user selects one or more

thumbnails from the user interface 12. It does not matter where or in what container the user selects a particular thumbnail, it is automatically added to the Play List once selected. The user is able to select multiple video, still images and/or audio files to preview. The Play List records the order in which the user selects the video and/or audio files and allows them to be played back in sequence." EX1014, ¶56; *see also* EX1014, FIGS. 2 and 16:

FIG.-2

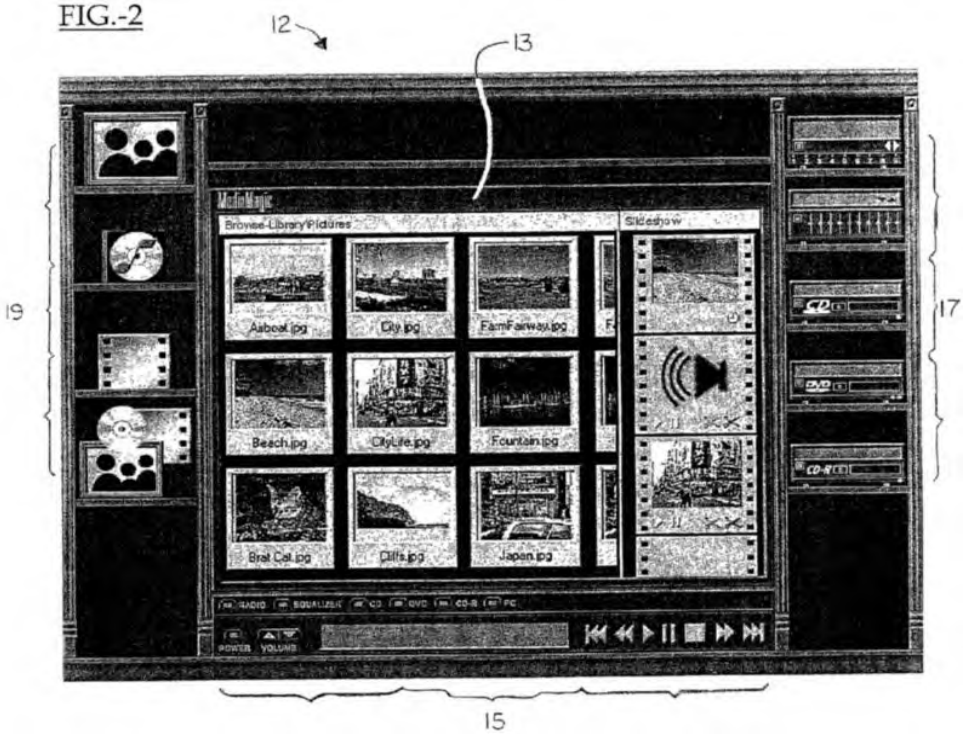

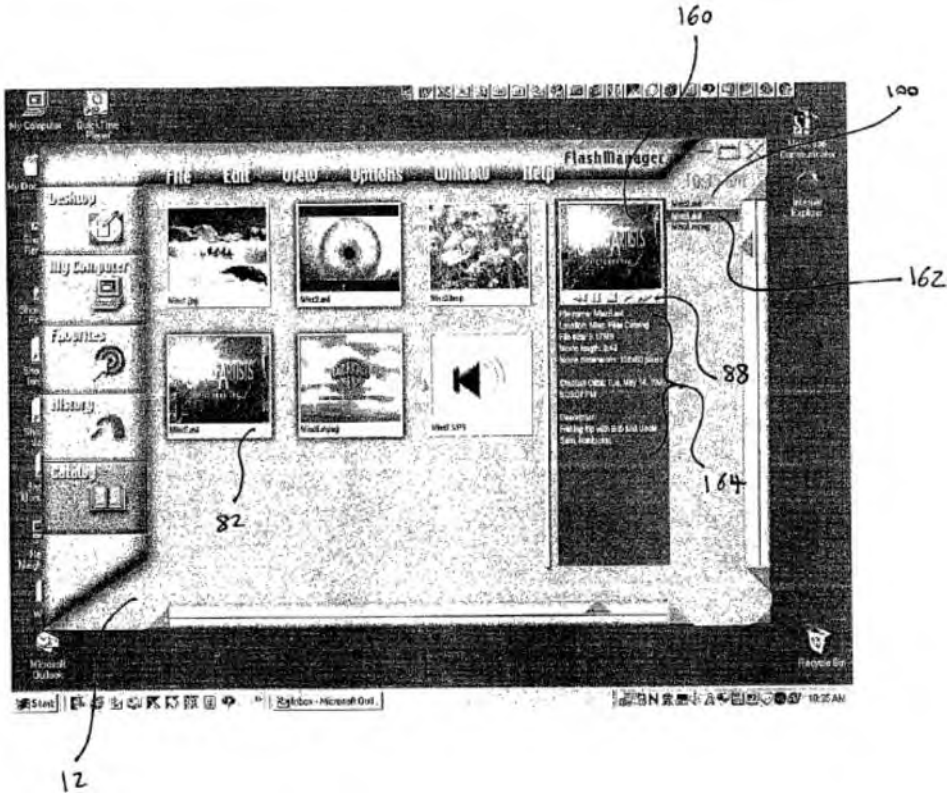

EX1014, ¶¶39, 57 ("For the convenience of the user, Player Controls 88 are included within the thumbnail 160, thereby allowing the user to preview the video/audio thumbnail selected while reviewing the detailed information. Another feature of user interface 12 is the ability to preview any selected video computer file in full screen mode.").

36. Playlists of media elements were well known. *See, e.g.*, EX1035 (U.S. Patent No. 6,609,253 to Swix) ("Swix"); *see also* EX1036 (U.S. Publ. No. 2004/0078383 to Mercer et al.) ("Mercer").

37. Swix describes a "(VCR) control of an interactive media system" (1:10-11) that includes a play list containing portions of the video to be played:

"the video server delivers a program to the subscriber containing at least two video portions. The video server orders and assembles the video portions into a playlist. For example, if the subscriber orders a movie, the present invention may precede the movie with an advertisement, a movie trailer, or a public announcement." EX1035, 13:49-55.

38. In Mercer, authoring software is provided for managing user created, as well as automatically created, playlists. *See* EX1036, ¶¶4, 6-7. These playlists could also include sub-groupings. *See* EX1036, ¶¶ 6-7 ("Unlike playlists on the personal computer, which are simple flat lists of media files, the playlists of the invention include one or more groups that allow the user to use a simple navigation metaphor such as 'Next' and 'Previous' to navigate within the groups to the desired album, artist, genre, etc."), 32, 39 (describing playlists). Mercer's playlists were enabled by a "file system structure" that "represent[ed] information about all the media files on a computer-readable medium." *See, e.g.*, EX1036, FIGS. 15 and 16, ¶¶29-30; *see also* ¶¶128-316 (describing contents). A user interface for managing playlist is provided in FIGS. 11 and 12. *See* EX1036, ¶113 ("FIG. 11, user interface 1102 displays icons indicating menu options 1104, 1106, 1108, and 1110 to select video files, audio files, image files, and presentations, respectively. FIG. 12 is a screen shot of user interface 1102 after the audio files menu option 1106 is selected by the user").

39. In summary, the storage and reproduction of multimedia files, playlists, menus, and pointers/hierarchical data organization, were all well-known and commonplace features of standard computing systems and software. Similarly, given the ubiquitous nature of such features, one of skill in the art at the time of filing would have been able to implement such features into a multimedia system with relative ease, and with a good understanding of how such features would perform once included.

C. Materials Considered

40. The analysis that I provide in this Declaration is based on my experience, as well as the documents I have considered, including the ’815 Patent (EX1001). I have also reviewed the prosecution history of the ’815 Patent (EX1002) and the materials discussed herein. My opinions are also based upon my knowledge, education, experience, research, and training in the field that I have accumulated over the years.

41. A list of materials considered is listed above in the Index of Exhibits.

III. LEGAL STANDARDS

42. I am not a lawyer. Therefore, in formulating the opinions and conclusions set forth in this summary, I have been provided with an understanding of the prevailing principles of U.S. patent law that govern the issues of patent claim construction and obviousness.

43. I have been informed that a determination of whether the claims of a patent are anticipated or rendered obvious by prior art is a two-step analysis: (1) determining the meaning and scope of the claims, and (2) comparing the properly construed claims to the prior art. I have followed that framework in providing the opinions and analysis set forth herein.

A. Obviousness

44. I have been informed that the following four factors are considered when determining whether a patent claim is obvious: (1) the level of ordinary skill in the pertinent art at the time the invention was made; (2) the scope and content of the prior art; (3) the differences between the prior art and the patent claims at issue; and (4) objective evidence of nonobviousness, if any. I understand that such objective evidence of nonobviousness can include evidence of the commercial success of an invention, evidence of a long-felt need that was solved by an invention, evidence that others copied an invention, failure of others facing the same state of the art to develop a satisfactory solution, professional approval or skepticism, or evidence that an invention achieved a surprising result. I understand that such evidence must have a nexus, or causal relationship, to the claimed invention in order to be relevant to the obviousness or non-obviousness of the claim.

45. I have been informed that an obviousness evaluation can be based on a combination of multiple prior art references. It is my understanding that the combination of familiar elements according to known methods is likely to be obvious when it does no more than yield predictable results. I further understand that when a work is available in one field of endeavor, design incentives and other market forces can prompt variations of it, either in the same field or a different one. If a person of ordinary skill can implement a predictable variation, § 103 likely bars its patentability. I understand that the Supreme Court stated that when there is a design need or market pressure to solve a problem and there are a finite number of identified, predictable solutions, a person of ordinary skill has good reason to pursue the known options within his or her technical grasp because the result is likely the product not of innovation but of ordinary skill and common sense.

46. I have been informed that often it will be necessary for one addressing the obviousness of a claim to look at interrelated teachings of multiple patents, references and prior art products; the effects of demands known to the design community or present in the marketplace; and the background knowledge possessed by a person of ordinary skill in the art – all in order to determine whether there was an apparent reason to combine the known elements in the fashion claimed by the patent at issue.

47. I have also been informed that examples of factors that may support a conclusion of obviousness include:

(A) combining old and known elements, with no change in their respective functions, according to known methods to obtain predictable results;

(B) simply substituting one known element for another to obtain predictable results;

(C) using known techniques to improve similar devices (methods, or products) in the same way;

(D) applying a known technique to a known device (method, or product) ready for improvement to yield predictable results;

(E) choosing from a finite number of identified, predictable solutions, with a reasonable expectation of success—in other words, whether something is "obvious to try";

(F) using work in one field of endeavor to prompt variations of that work for use in either the same field or a different one based on design incentives or other market forces if the variations are predictable to one of ordinary skill in the art; and

(G) arriving at a claimed invention as a result of some teaching, suggestion, or motivation in the prior art that would have led one of ordinary skill to modify the prior art reference or to combine prior art reference teachings.

I have also been informed that other rationales to support a conclusion of obviousness may be relied upon – for instance, that common sense (where substantiated) may be a reason to combine or modify prior art to achieve the claimed invention.

48. I am also informed that a basis to combine teachings need not be stated expressly in any prior art reference. However, I understand that there must

be some evidence showing an articulated reasoning with rational underpinnings to support a motivation to combine teachings and to support the legal conclusion of obviousness.

49. I understand that the obviousness analysis must be performed without the benefit of hindsight. Thus, it is impermissible to use the patented invention as a blueprint or template to perform a hindsight reconstruction of the invention from prior art elements. Using the invention as a roadmap to re-create the invention from the prior art would improperly discount the value of combining various existing features or principles in a new way to achieve a new result, which is often the very essence or definition of invention. Similarly, the motivation to combine references cannot come from the invention itself.

50. I have been informed that the courts have identified factors or circumstances that weigh against a finding of obviousness. These circumstances include:

(A) where the prior art itself does not disclose, either expressly or by implication, a reason or motivation to combine elements to arrive at the claimed invention;

(B) where no foundation or explanation is offered as to why it would have been known to a person of ordinary skill in the art that combined elements would yield a particular result;

(C) where the art at issue is known or understood to be unpredictable; and

(D) where one of ordinary skill in the art would have taken the view that a combination of elements would yield an inoperative

device, or otherwise would not have had a reasonable expectation of success.

51. I understand that, when prior art teaches away from combining certain known elements, discovery of a successful means of combining them is more likely to have been nonobvious. I have been advised that:

(A) A reference may teach away when a person of ordinary skill is discouraged from following the path set out in the reference;

(B) A reference may teach away when a person of ordinary skill is led in a direction divergent from the path that was taken by the applicant; or

(C) A reference may teach away from a use when that use would render the result inoperable or produce a seemingly inoperative device.

52. I further understand that, when analyzing whether a reference teaches away, it is helpful to understand what does not constitute teaching away:

(A) It is not teaching away if the reference teaches that modification or combination would be expensive or economically wasteful;

(B) It is not teaching away when the reference merely lacks a claimed feature; and

(C) It is not teaching away when a reference teaches a preferred, better, or alternative way.

B. Priority/Written Description

53. I understand that it is elementary patent law that a patent application is entitled to the benefit of the filing date of an earlier filed application only if the disclosure of the earlier application provides support for the full scope of the claims of the later application, as required by 35 U.S.C. § 112. I understand that

when a priority claim involves a chain of priority documents, each application in the chain leading back to the earlier application must comply with the written description requirement of 35 U.S.C. § 112. I understand that, to satisfy the written description requirement of 35 U.S.C. § 112, the disclosure of the earlier filed application must convey with reasonable clarity to those skilled in the art that, as of the filing date sought, the inventor was in possession of the invention. I understand that a prior application that merely renders the later-claimed invention obvious is not sufficient to meet the written description requirement—it must describe the claimed invention with all its limitations. Similarly, I understand that it is not sufficient for purposes of the written description requirement of § 112 that the disclosure, when combined with the knowledge in the art, would lead one to speculate as to modifications that the inventor might have envisioned, but failed to disclose.

54. I understand that even when each element may be individually described in the specification, the lack of adequate description of their combination renders those claimed combinations invalid under Section 112. I understand that it is not enough that applicant show where each claimed element resides in the earliest filed application but applicant must also provide support for the linkage of the claimed elements creating the embodiment. Petitioner's counsel has informed me that a patent owner cannot show written description support by picking and

choosing claim elements from different embodiments that are never linked together in the specification. I understand that a description that merely renders the invention obvious does not satisfy the written description requirement.

IV. THE ’815 PATENT

A. Summary of the ’815 Patent

55. The ’815 patent is titled “Editing Method and Recording and Reproducing Device,” and claims priority to a number of U.S. and Japanese applications, the earliest of which was filed December 2, 2004.

56. The ’815 Patent is directed to managing data, such as multimedia digital data files (*e.g.*, audio and videos files) that a user may want to reproduce. *See, e.g.*, Abstract; 1:21-44. The ’815 patent discloses a recording and reproducing device which records the multimedia digital data files onto a recording medium, reproduces data from these files on the recording medium, and allows users to select and manage “arbitrary play lists” of the data. EX1001, Abstract. The ’815 patent discloses a unit of management for managing “all registered play list information” and an upper management hierarchical level. EX1001, Abstract.

57. For instance, the ’815 Patent uses a “management” scheme with hierarchal levels, and provides the following summary of a “management state of AV data in a recording medium”:

FIG.1

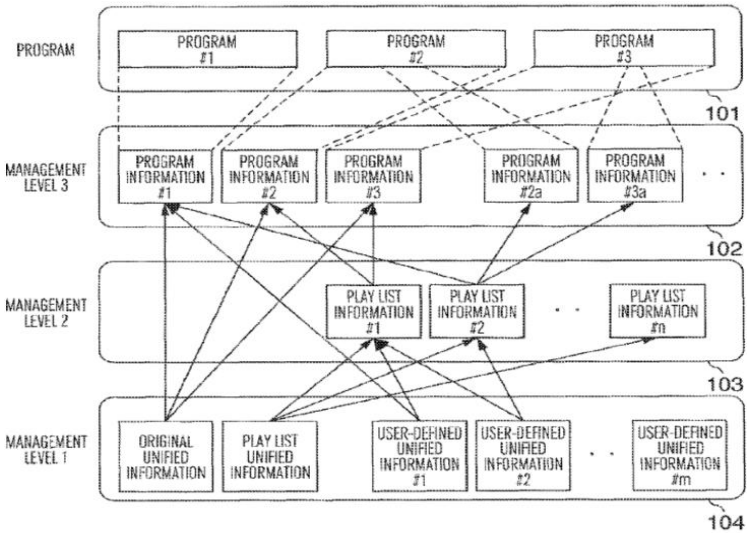

EX1001, 3:14-16. The ’815 Patent purports to solve problems with “conventional technique[s]” by allowing users to have more control over manipulation and rearranging of their content. *See, e.g.*, EX1001, 2:13-2:61. The primary example used in the specification is with respect to “play lists.” *See, e.g.*, EX1001, Abstract (describing the ability “to provide a recording and reproducing device that allows a user to select and manage arbitrary play lists....”).

58. In particular, the ’815 Patent highlights its data management functions in the context of an example where there is a playlist for a “mother” and a second playlist for a “father.” As shown in FIGS. 6 and 7 of the ’815 Patent, two menu areas (“601” Mother and “701” Father) each display a list of thumbnail images (402, 502) and (503, 502) corresponding to “play list information” #1 and #2, respectively.

FIG.6

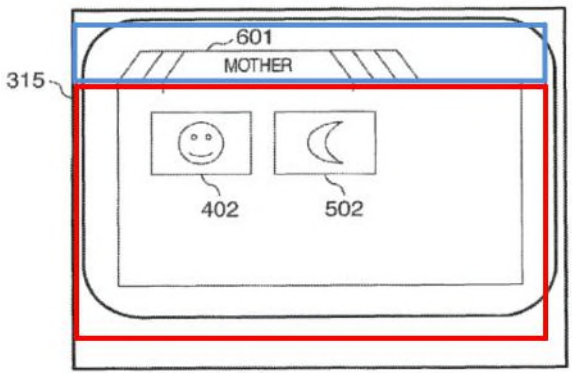

FIG.7

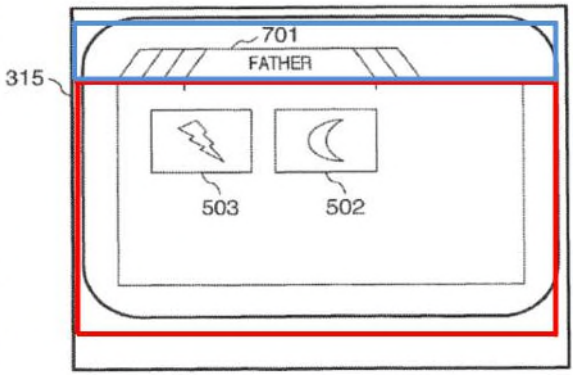

See also EX1001, 5:54-56. As shown above, each menu has a first area (shown in blue) that indicates a first group, classified as "Mother" or "Father." Each menu also has a second area (shown in red), which displays the thumbnails. The thumbnails shown above are pointers to video data (*e.g.*, playlists and/or underlying video clips), and as such, even if one (*e.g.*, 502) is deleted from the first group, it will continue to be included in the second group. *See, e.g.*, FIG. 1.

59. Specifically, the '815 Patent describes that the "'mother' can use the menu display tag for mother 601 as a folder dedicated to herself, and freely register and delete data to be reproduced," and the "'father' can use the menu display tag for father 701 as a folder dedicated to himself, and freely register and delete data to be reproduced." *Id*. at 6:4-18. That is, if the father and mother each have the same video on their respective lists (*e.g.* 502), the father can delete the video from his list without that video being automatically deleted from the mother's list.

B. The Challenged Claims

60. While much of the ’815 Patent specification discusses hierarchal data structures associated with video files, the Challenged Claims are not so limited. In fact, the ’815 patent claims do not include any limitations directed toward this hierarchical data structure. Instead, the claims are drafted from the user’s perspective and address features and functionality of the user interface presented to the user without specifying how that functionality is implemented.

61. For example, claim 1 is directed toward an “information processing apparatus” and specifies that the user interface of this apparatus includes a “first area including a first character” and a “second character” that the user can select to view first and second groups of thumbnails representing first and second groups of video information. Claim 1 further specifies that if a piece of video information that is included in the first and second groups is deleted from the first group, that piece of video information remains in the second group and the thumbnail for that piece of video information continues to be displayed with the thumbnails for the second group. However, nothing in claim 1 recites how any of this is achieved by the information processing apparatus.

62. The text of the Challenged Claims is presented in the “Table of Claims” that precedes Section I, along with an identifier of each limitation in those claims. I will refer to these limitation identifiers throughout this declaration.

C. Prosecution History

63. The ’815 patent was filed on May, 26, 2020, as one of a long string of applications that claim priority to Japanese Patent Application No. JP2004-349264, filed on Dec. 2, 2004. EX1001, (30). The application was filed with 27 original claims. EX1002, 77-89 (5/26/2020 Claims). The claims were allowed on January 21, 2021, without any intervening office actions. EX1002, 11 (1/27/2021 Notice of Allowability).

64. The examiner provided a brief statement of reasons for allowance:

> Honkaniemi (US 2007/022382) disclose user interface includes items, each item having a media file and arranged to be visible as a thumbnail to the user interface. The item are arrange to establish at least one playlist so that a series of thumbnails are arranged to establish the playlist.
>
> The prior arts do not disclose or suggest continue to include the video information upon the video information is included in both the first group and the second group after the video information is deleted.

EX1002, 12 (1/27/2021 Notice of Allowability).

65. This purported novel feature, however, was disclosed explicitly or at least implicitly by Horn, Kaplan, Bryant and others well before the ’815 patent’s priority date.

D. Claim Construction

1. Definition of One of Ordinary Skill in the Art

66. I understand that the patent claims must be considered through the eyes of a hypothetical "person of ordinary skill in the art" (POSITA). I understand that a POSITA is not a specific or real individual, but rather a hypothetical individual having the qualities reflected by the following criteria: (a) the type of problems encountered in the art; (b) prior art solutions to those problems; (c) the rapidity with which innovations are made; (d) the sophistication of the technology; and (e) the education level of active workers in the field. Furthermore, a POSITA would be familiar with the entire prior art literature.

67. I understand that in the 01432FWD, the Board found that a person of ordinary skill in the art in the relevant fields as of the December 2, 2004 priority date of the '815 Patent would have had a bachelor's degree in Computer Science, Electrical Engineering, Computer Engineering, or a related field, and two years of practical experience in digital data management. I have been asked by counsel for Petitioners to apply that definition for the purposes of forming my opinions in this declaration and have done so.

68. As I have both a Ph.D. in Computer Science and 30 years of experience in industry and academia, I am well acquainted with the level of ordinary skill that would be required to implement the systems and methods

described in the ’815 Patent. Given my experience mentoring more junior students and colleagues, I am also capable of rendering informed opinions as to the understanding of one of ordinary skill in the art as of the time of the December 2, 2004 priority date claimed by the ’815 Patent, including the meaning of terms found in the asserted claims.

69. I am qualified as at least a person of ordinary skill in the art, both now and as of the time of the claimed December 2, 2004 priority date claimed by the ’815 Patent.

2. Claim Construction Standards

70. I understand that in an *inter partes* review (“IPR”), challenged claims are interpreted using the same claim construction standard that is used to construe the claim in a civil action in federal district court. I understand that this means that claim terms of a patent are given the ordinary and customary meaning the terms would have to a POSITA, in view of the description provided in the patent itself and the patent’s file history. I understand that to determine how a POSITA would understand a claim term, one should look to those sources available that show what a POSITA would have understood the disputed claim language to mean. I understand that, in construing a claim term, one looks primarily to the intrinsic patent evidence, including the words of the claims themselves, the remainder of the patent, and the patent’s prosecution history. I understand that extrinsic evidence,

which is evidence external to the patent and the prosecution history, may also be useful in interpreting patent claims but that extrinsic evidence cannot be used to vary or contradict the meaning indicated by the intrinsic patent evidence, which I understand is the claims, specification and prosecution history of the ’815 patent. I understand that words or terms should be given their ordinary and accepted meaning unless it appears that the inventors were using them to mean something else. In making this determination, the claims, the remainder of the patent, and the prosecution history are of paramount importance. Additionally, the patent and its prosecution history must be consulted to confirm whether the patentee has acted as its own lexicographer (*i.e.*, provided its own special meaning to any disputed terms), or intentionally disclaimed, disavowed, or surrendered any claim scope.

71. I do not contend that the below proposed constructions are complete constructions of these limitations or the claims for any other purpose, including for issues that have been raised in the related litigation.

72. I have construed any claim term not listed below according to its plain and ordinary meaning to a POSITA at the time of the ’815 patent’s earliest claimed priority date.

3. Construction of Terms from the ’815 Patent

a. “video information” (claims 1, 9, 16 and 21)

73. In my opinion, this term should be construed as referring to audio-visual data (*e.g.*, a video such as a recording of a TV program) or information referring to a storage location of such audio-visual data (*e.g.*, a pointer to the audio-visual data), as well as information constituting or specifying a group of audio-visual data (*e.g.*, a playlist). Information specifying a group of audio-visual data may further include information specifying time periods of such audio-visual data that should be displayed to a user and/or a sequence in which audio-visual data should be displayed to a user. *See, e.g.*, FIGS. 1, 5, 6, and 7, and the corresponding text at EX1001 at 3:48-4:39, 6:5-65, and claim 1. That “video information” includes groups such as playlists is clear from passages in the ’815 patent such as 1:63-2:27 and 3:55-4:13. That “video information” includes an individual item of audio-visual data such as an individual video is evident from, *e.g.*, claim 7, which recites “an analog to digital converter for converting analog audio information being recorded into digital audio information” and “compressing the plurality of *video information* including digital video information and the digital audio information” (emphasis added). EX1001, 9:60-67. The recitation in claim 7 that “video information” includes audio information that has been converted to digital form indicates that “video information” is broader than

groups/playlists and includes individual items of audio-visual information such as a video of a recorded TV program. In my analysis below, I show that the Challenged Claims are invalid using examples where the "video information" is video in some Grounds and playlist(s) in other Grounds.

b. "one video information" (claims 1, 9, 16, 21)

74. The Board determined that the "one video information" included in the first and second group is the same "one video information," not merely copies thereof as argued by PO in IPR2018-01432. EX1009 at 13-15. This construction should be maintained. The limitation uses the article "one" to refer to "one video information," and subsequent references recite "*the* one video information." The plain usage of these words implies that the same "one video information" is initially included in each group. *Id.* at 11. If different copies of video information existed in the first and second groups, then the "one video information" deleted from the first group could not "continue to be included in the second group," because there would be different video information in the second group. *Id.* at 11-12. The specification of the '815 patent supports this construction, which describes two users' groups (*i.e.*, user-defined unified information for "mother" and "father") ultimately referring to the same "one video information" (*e.g.*, underlying AV data for program #1). *Id.* at 12-13; EX1001, FIG. 1, 2:63-3:4, 3:48-60, 6:19-40.

c. "one video information … being deleted from the first group of video information" (claims 1, 9)

75. The Board also already construed the usage of "deleted" in the phrase "one video information . . . is deleted from the first group of video information" in the 01432FWD. EX1009 at 13-15. The Board determined that "delet[ing]" video information from the first group includes reversing a registration (*i.e.*, unregistering) of video information from the first group. *Id.* at 14-15. The Board further determined that "delet[ing]" video information from a group does not necessarily require deleting underlying AV data. *Id.* at 15.

76. I see no reason to deviate from the Board's reasoning here for the terms in Challenged claims 1 and 9, even though it reached its conclusions under the broadest reasonable interpretation standard. The deletion "from the first group of video information" implies that the deletion may relate to group membership, rather than to the underlying video data themselves. *Id.* at 14. Such construction is also consistent with the only instances of the word "delete" in the specification of the '815 patent, where users "freely *register and delete* data to be reproduced." *Id.*; EX1001, 6:25-28, 6:37-53. And such construction also is consistent with the language of the claim limitation itself, because deletion from a group is contrasted with inclusion in a group: "one video information … being *deleted* from the first group of video information, the one video information continues to be *included* in the second group of video information." EX1001, 9:11-16.

d. "the first group of video information being configured to allow a user to edit" (claims 1 and 9)

77. In my opinion, a plausible construction of this term, *for the purposes of this proceeding*, is that it means at least that a user can modify which video information is a part of the first group of video information. To the extent that it is necessary to resolve the Grounds discussed below, it is my opinion that this term should have at least this meaning to a POSITA because this is a type of user editing/modification disclosed in the specification. For example, the '815 patent states that "[t]he 'mother' can use the menu display tag for mother 601 as a folder dedicated to herself, and freely register and delete data to be reproduced." EX1001, 6:25-28. However, I reserve the right to assert in the District Court Litigation (No. 5:23-CV-00092-RWS) that this term is ambiguous and/or that the specification of the '815 patent does not satisfy the enablement and/or written description requirements of 35 U.S.C. § 112 for the full scope of this term.

e. "user profile" / "user profiles" (1, 9, 16, 17, 21, 23)

78. In my opinion, these limitations should be construed as requiring data representing distinctive features and characteristics of a user. EX1047, 3 (Am. Her. Dictionary, 4th ed. 2000) (defining "profile" as "5. A formal summary or analysis of data, often in the form of a graph or table, representing distinctive features or characteristics"); *see also* EX1048, 3 (Microsoft Computer Dictionary, 5th ed. 2002) (defining "user profile" as "A computer-based record maintained

about an authorized user of a multi-user computer system. A user profile is needed for security and other reasons; it can contain information such as the person's access restrictions, mailbox location, type of terminal, and so on.").

f. "one video information being removed from the first group of video information" (claims 16, 21)

79. Claims 16 and 21 recite "one video information being removed from the first group of video information." In my opinion, a POSITA would have understood that this term is substantially the same as "one video information … being deleted from the first group of video information" recited in claims 1 and 9 as they are performing the same function. The Board already construed the usage of "deleted" in the phrase "one video information ... is deleted from the first group of video information" in the Final Written Decision invalidating claims of U.S. No. 9,384,783, a patent related to the '815 patent that shares its specification. EX1009 at 13-15. The Board determined that "delet[ing]" video information from the first group includes reversing a registration (i.e., unregistering) of video information from the first group. *Id*. at 14-15. The Board further determined that "delet[ing]" video information from a group does not necessarily require deleting underlying AV data. *Id*. at 15.

80. There is no reason to deviate from the Board's reasoning here for the similar term in Challenged claims 16 and 21, even though it reached its conclusions under the broadest reasonable interpretation standard. The

removal/deletion "from the first group of video information" implies that the removal/deletion may relate to group membership, rather than to the underlying video data themselves. *Id.* at 14. Such construction is also consistent with the only instances of the word "delete"[5] in the specification of the '815 patent, where users "freely *register and delete* data to be reproduced." *Id.*; EX1001, 6:25-28, 6:37-53. And such construction also is consistent with the language of the claim limitation itself, because removal from a group is contrasted with inclusion in a group: "one video information being *removed* from the first group of video information, the one video information continues to be *included* in the second group of video information for the second user profile." EX1001, 12:29-34.

* * *

81. I have applied these constructions in my analysis of the '815 Patent and the prior art. However, my opinions regarding obviousness set forth herein are applicable even if any of these claim terms is given its plain and ordinary meaning, and my conclusions are not dependent on any particular construction. I reserve the right to respond to arguments made by Patent Owner with regard to the interpretation of any of these terms.

[5] The terms removed and removing only appear in the claims of the '815 patent.

V. PRIOR ART

82. My opinions in the declaration are based on the knowledge of a POSITA and the documents described below.

83. Before I address the prior art status of the references below, I have been asked to form an opinion as to whether claims 16-27 of the ’815 patent are entitled to priority to any of four earlier-filed applications to which the ’815 patent claims priority: 11/203,457; 12/56,898; 14/141,417; and 15/176,535 (the “Four Applications”). These Four Applications are the earliest U.S. applications to which the ’815 patent claims priority. *See* EX1001, front cover.

84. I have been informed that in order for a patent claim to be entitled to priority to an earlier-filed U.S. patent application, that earlier-filed patent application must provide written description of the full scope of the claim, including the full scope of all of its limitations, as discussed in §III.B above.

85. In my opinion, none of these Four Applications provide written description support of the full scope of at least the following three limitations found in each of the independent claims (claims 16 and 21) of claims 16-27:

- “receiving . . . first video information wirelessly from a device external to the information processing apparatus, the first video information being received including second video information that is encrypted” (“Term 1”)

- "upon the one video being removed from the first group of video information, the one video information continues to be included in the second group of video information for the second user profile and the second group of thumbnails continues to display a thumbnail corresponding to the one video information when the second character is selected" ("Term 2")
- "user profile" or "user profiles" ("Term 3")

86. For Term 1, the only disclosure of any kind regarding encryption I see in the specifications of these Four Applications, which are identical to the '815 patent,[6] is in connection with Fig. 3. The description of Fig. 3 discloses that video information is received at the information processing apparatus of Fig. 3 and only after it has been received it is encrypted by the encryption circuit 331 and stored in a recording and reproducing unit 304. EX1001, 4:43-5:6 and Fig. 3. recording and reproducing unit 304 which is not itself an information *processing* apparatus and is not disclosed in the '815 patent as being wirelessly connected to encryption circuit 331.

[6] Because the specifications of the Four Applications are identical to the specification of the '815 patent, I cite to EX1001. The corresponding disclosures in the Four Applications are identical to the cited portions of the '815 patent.

FIG.3

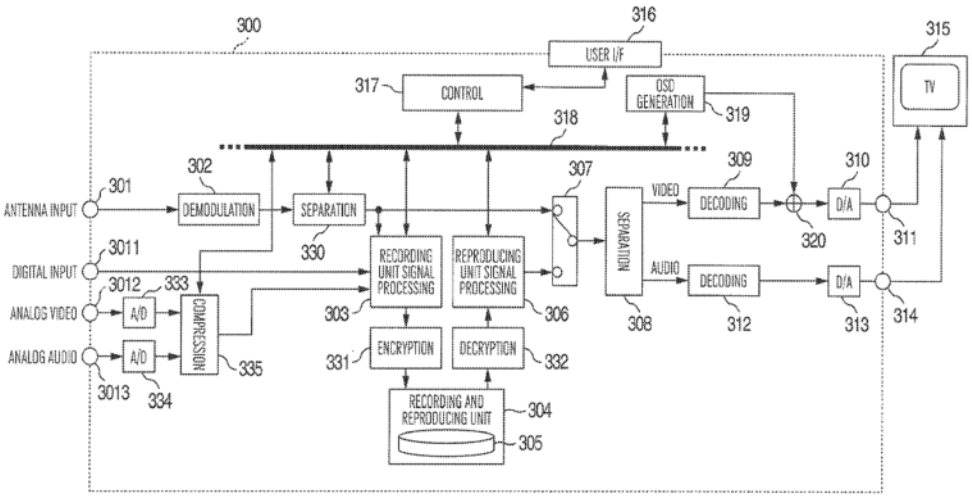

87. This description does not disclose the wireless receipt of video information that is in encrypted form when received as required by Term 1. As shown in Fig. 3 and described in the ’815 patent, video may be input to the recording and reproducing device 300 in one of three ways: via an antenna input at terminal 301, as part of a “Digital Input” signal including compressed audio and video input from another device at terminal 3011, and in an analog video signal input via terminal 3012. ’815 patent at 4:48-55. None of these video inputs are encrypted as received.

88. The ’815 patent discloses that video included in “digital broadcast or the like” is demodulated by demodulation circuit 302, then “subjected to necessary signal such as timing adjusting data addition and modulation in the recording and reproducing unit signal processing circuit 304, encrypted in the encrypted circuit

331, and then recorded on the recording medium 305 by the recording and reproducing unit 304." EX1001, 5:7-14.

89. Video received as part of the Digital Input at node 3011 is "subjected to the necessary signal processing such as timing adjusting data addition and modulation in the recording unit signal processing circuit 303, encrypted in the encryption circuit 331, and then recorded on the recording medium 305 by the recording and reproducing unit 304." EX1001, 5:14-20.

90. Analog video received at terminal 3012 is converted to digital form by the Analog-to-Digital converter 333, then compressed by the compression circuit 335 and then input to the Recording Unit Signal Processing circuit 303 and encrypted in the encryption circuit 331 before being recorded on the recording medium 305 by the recording and reproducing unit 304. EX1001, 5:20-27.

91. There is no disclosure in any of these passages of the digital video being received in encrypted form. Nor is there any disclosure in any of these passages of the encryption circuit 331 not encrypting the video signal input to it, which a POSITA would expect if video were being received in encrypted form. Further, a POSITA would expect that, if the digital video were already encrypted when received, there would be a path in Fig. 3 to allow the video to bypass encryption circuit 331 before decrypting the video in circuit 332, but no such path exists in Fig. 3.

92. The only path that video may take through the system of Fig. 3 that does not pass through the encryption circuit 331 also does not pass through the decryption circuit 332. That path (which is not described in the '815 patent[7]) is from the recording unit signal processing 303, to the bus 318, then to the reproducing unit signal processing 306, then to switch/multiplexer 307, then on to separator 308, video decoding 309, summer 320, D/A 310 and out to TV 315. Because the output to the TV is analog, and since the digital video is not decrypted anywhere in that path (decryption circuit 332 only accepts inputs from the recording and reproducing unit 304), it follows that video input to the recording unit signal processing 303 must be unencrypted when received because otherwise it would not be perceptible at the TV 315.

93. In addition to the absence of any express or implied disclosure of encryption in the Four Applications, encryption is also not inherent. For example, conventional analog (NTSC) TV broadcasts were not encrypted, and conventional digital TV broadcasts in the United States were also not encrypted (i.e., were

[7] A POSITA would understand in view of the '815 patent disclosure discussed above that the connections between the bus and the recording unit signal processing circuits 304 and 305 are control and status signals that enable the controller 317 to control the circuits 304 and 305 rather than video signals.

broadcast "in the clear") at the time of the '815 patent. EX1049, 3:20-67 and Fig. 1. Indeed, ATSC-1 digital TV broadcasts are still not encrypted even today. EX1050, 1-2. Similarly, digital video received via a wireless cellular or WiFi modem as, e.g., email attachments or downloaded from a website, need not be encrypted and often are not. For these reasons, video received at any of the inputs 301, 3011 or 3012 of Fig. 3 is not inherently encrypted.

94. Thus, there is no written description support for Term 1 of claims 16 and 21. For this reason alone, claims 16-27 of the '815 patent are not entitled to priority to any of the Four Applications.

95. For Term 2, nowhere in the specification is there any disclosure of whether or not the deletion of video information from one group or playlist results in that video information not being deleted from any other group or playlist in which it appears. While the three-level structure of Fig. 3 may enable this functionality and may it obvious, this "no deletion" functionality is not inherent. Whether to configure a system to allow video information to remain in other groups when it is deleted from one group is a design choice, and as PO's expert testified in IPR2018-01432 for the predecessor '783 patent, a POSITA would have considered it more common to delete the underlying video information when a user deletes a pointer to it rather than deleting just the pointer alone so that the video information can remain a part of another group. EX1009, 36 (citing Ex. 2002, ¶65

in IPR2018-01432 (EX1046, ¶65)). This lack of inherency becomes even more apparent when one considers the subject matter of claim 17, which states that any user can delete stored video information regardless of what user profile was used to record it. As discussed above, I have been informed that a specification that merely makes a limitation obvious is not sufficient written description of Term 2 to satisfy 35 U.S.C. §112.

96. For the reasons discussed above, there is no written description support for Term 2 of claims 16 and 21. For this second, independent reason, claims 16-27 of the ’815 patent are not entitled to priority to any of the Four Applications.

97. There is also no written description support for Term 3 of claims 16-21 in any of the Four Applications. “Profile” (let alone the claim term “user profile”) does not appear anywhere in the specification of these applications. Term 3 was first added during prosecution in an amendment on 1/9/2020, nearly 15 years after the filing of the first application to which the ’815 application claims priority. EX1040, 56. While the ’815 patent discusses terms such as “Mother” and “Father” that appear on the file tabs in Figs. 6 and 7, these terms are simply user names, and a POSITA would understand a profile to include more than a user name. Additionally, claim 16 recites “a first user profile associated with a first character” and further recites “the first group of video information associated with the first

user profile." EX1001, 12:1-2 and 1227-28. Thus, the first user profile, whatever it may be, must be something *more* and *different* from both the "first character" *and* the identity of the videos associated with the "first character." To find otherwise renders the "user profile" limitations superfluous, and I am informed by counsel for Petitioner that constructions that render claim terms superfluous are disfavored.

98. For the reasons discussed above, there is no written description support for Term 3 of claims 16 and 21. Accordingly, claims 16-27 of the '815 patent are not entitled to priority to any of the Four Applications for this third, independent reason.

A. U.S. Patent No. 7,275,063 ("Horn") (EX1005)

99. Horn was filed on July 16, 2003 and issued on September 25, 2007. EX1005, (54), (22), (45). I have been informed by counsel for Petitioners that Horn is prior art to the '815 patent under pre-AIA 35 U.S.C. § 102(e) and post-AIA §102(a).

100. Horn discloses a computer data processing system including a central processing unit configured with a novel integrated computer control software system for the management of data objects including dynamic and automatic organization, linking, finding, cross-referencing, viewing and retrieval of multiple objects regardless of nature or source. EX1005, Abstract. The overall inventive

computer control system is termed "MFS" for metadata filing system. EX1005, 5:31-46.

B. WinTV (EX1010)

101. The WinTV card was a product offered for sale/sold in the U.S. by Hauppauge Computer Works, Inc. at least by November 10, 1999 (EX1011), and its Installation and Reference Manual (EX1010, hereinafter "WinTV") is dated June 30, 1999 (EX1015, p. iii). A POSITA would have been familiar with Hauppauge WinTV products as they were among the early TV tuner products at that time and were one of only two TV tuner products supported by the Windows Media PC with which I was familiar. EX1039, 4. A POSITA would therefore have known to look on the Hauppauge website for relevant information. These products were also mentioned in patents that would have come to the attention of a POSITA looking for information on such products. *E.g.*, EX1037, 2:6-8; EX1038, 3:51-55. I have been informed by counsel for Petitioners that WinTV is prior art to the '815 patent under pre-AIA 35 U.S.C. § 102(b) and post-AIA §102(a).

102. The WinTV card was a "Plug-and-Play" device installed in PCs running Windows95, 98 and NT 4.0, EX1010, p. 1-1, that along with its software applications (*e.g.*, WinTV-Capture) allowed for the receipt, playback and "motion video capture" of video and, in combination with a sound card, audio information

such as those contained in NTSC formatted television signals. EX1010, pp. 3-4, 4-1, 4-5.

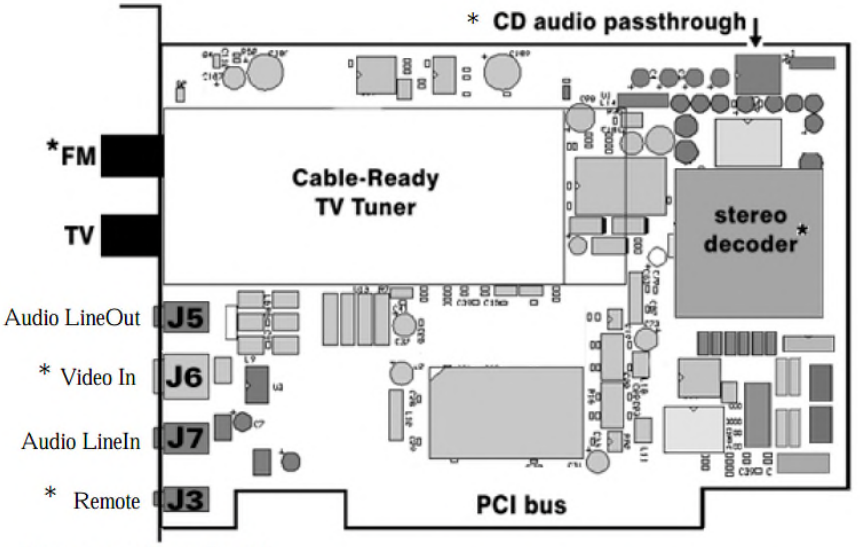

*Note: not available on all models.
Note: this outline may not reflect the current revision of your WinTV board. For the most up to date information, see the WinTV QuickInstall Guide provided with your WinTV board.

EX1010, p. 1-1.

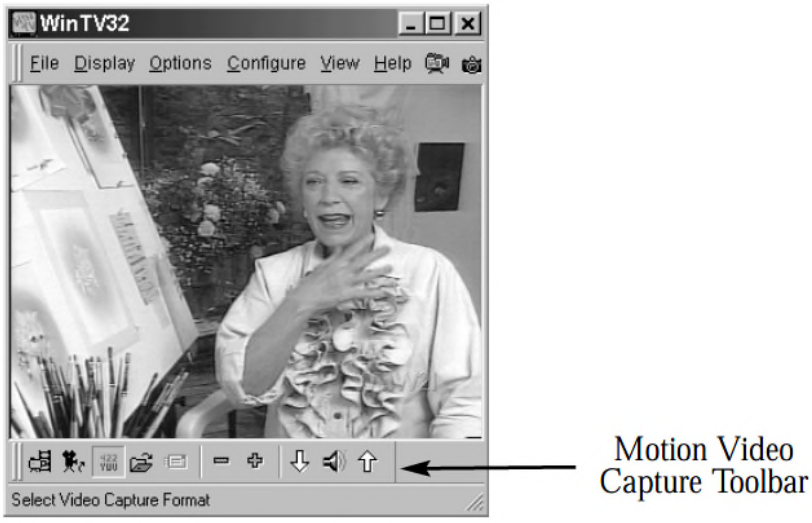

EX1010, p. 3-4.

103. The video information can come from a connected device such as a VCR, video camera or camcorder, EX1010, p. 1-13, or a live feed such as over the air or cable TV programming. EX1010, pp. 1-1, 6-1.

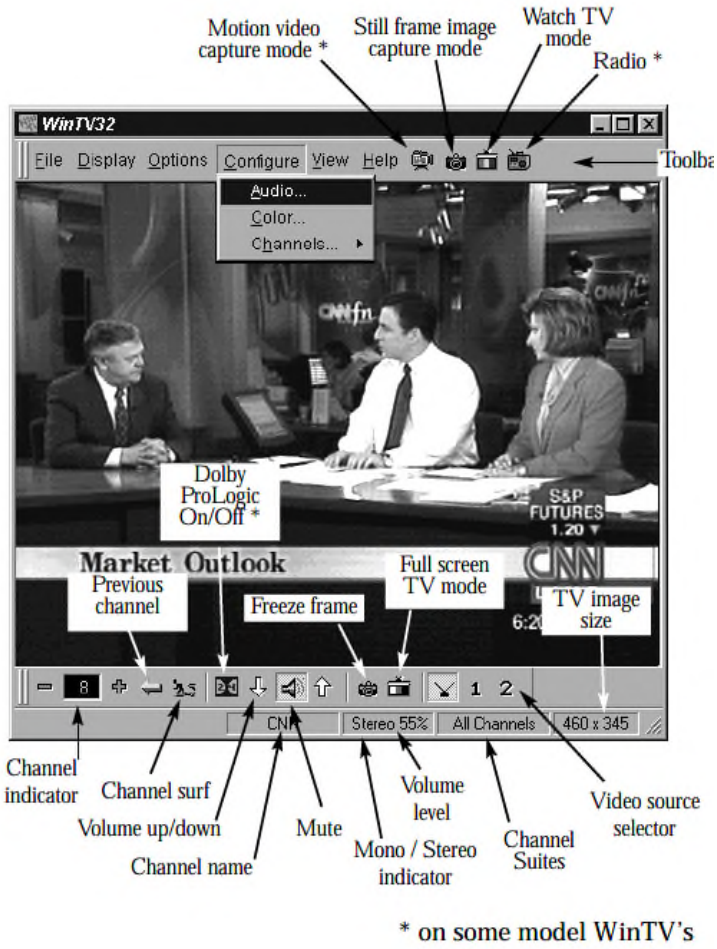

EX1010, p. 3-1.

104. WinTV also discloses signal conversion (*e.g.*, A-D) and video and audio compression techniques designed to increase efficiency and storage. EX1010, pp. 3-9, 4-1, 4-5, 4-6, 7-1.

C. U.S. Patent No. 7,970,240 ("Chao") (EX1006)

105. Chao was filed on December 17, 2002, and issued on June 28, 2011. EX1006, (54), (22), (45). I have been informed by counsel for Petitioners that Chao is prior art to the '815 patent under pre-AIA 35 U.S.C. § 102(e) and post-AIA §102(a).

106. Chao discloses a computer based, digital image management system that visually presents an entire archive in a manner that facilitates easy, non-textual, searching for specific images. EX1006, Abstract. For example, images represented by thumbnails (as shown in the green highlighted area below) are clustered into collections/albums which themselves are represented by thumbnails (as shown in the gold highlighted area below) based on events, which are then clustered by time such as the year the photos were taken (1997-2002 in the gold highlighted area below). EX1006, 12:56-13:9, FIG. 8:

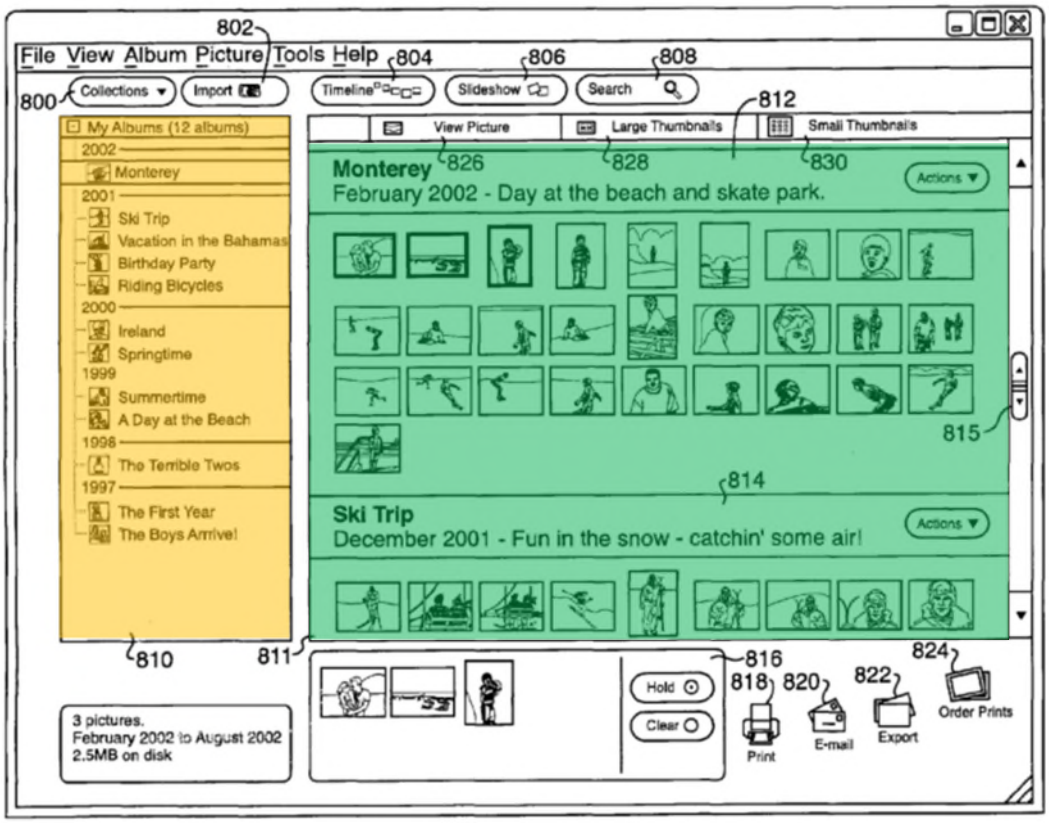

FIG. 8

D. U.S. Patent Application Publication No. 20010056434A1 ("Kaplan") (EX1014)

107. Kaplan was filed on 3/29/2001 and published on 12/27/2001. EX1014, front cover. I have been informed by counsel for Petitioners that Kaplan is prior art to the '815 patent under pre-AIA 35 U.S.C. §§ 102(a) and 102(b) and post-AIA §102(a).

108. Kaplan recognizes that with the increasing amount of multimedia content on computers due to "the ability to stream or download multimedia content, such as movies and music," there is a need for improved ways in which

users can "keep track of and organize their computer files containing multimedia content." EX1014, ¶¶2-3. As such, Kaplan provides:

> [A] multimedia management system for storing, manipulating, and displaying multimedia content. The system comprises a user interface, a plurality of predefined functions, a multimedia acquisition interface, and system controls. The system provides users with a simple and intuitive method and computer program for reviewing multimedia content, which can include digital video, digital audio and text, still images, animation, and MIDI.

EX1014, Abstract. The disclosed system "provides users with a simple and intuitive method and computer program for reviewing their multimedia content, which can include digital video, digital audio and text, still images, animation, and MIDI." EX1014, ¶38.

109. Kaplan describes that "one of the advantages to the user interface 12 of the present invention is that all information and multimedia content is displayed through thumbnails 36, which are small image representations of larger images." EX1014, ¶40. "Generally, thumbnails 36 provide users with a more intuitive method of managing computer files, such as multimedia content, because users do not have to remember file names." *Id*. Kaplan further describes that "[o]ther standard features of user interface 12 include horizontal and vertical screen scrolling actuators 38 and 40 respectively and control functions." *Id*. Additionally, the "user interface 12 may include standard operating system functions 20, which

consist of the following pull down menus: FILE, EDIT, VIEW, OPTIONS, WINDOW, and HELP."

110. This interface 12 may include "a primary set of options," such a "Desktop 22," "My Computer 24," "Favorites 26," "History 28," and "Catalog 30," to display different classifications of video information, which "may be represented on an interface as a 'button.'" EX1014, ¶40. FIG. 4 of Kaplan, reproduced below, shows an example of interface 12, with the buttons for different classifications shown on the left hand side of the interface, and the thumbnail images for corresponding content shown on the right hand side of the interface:

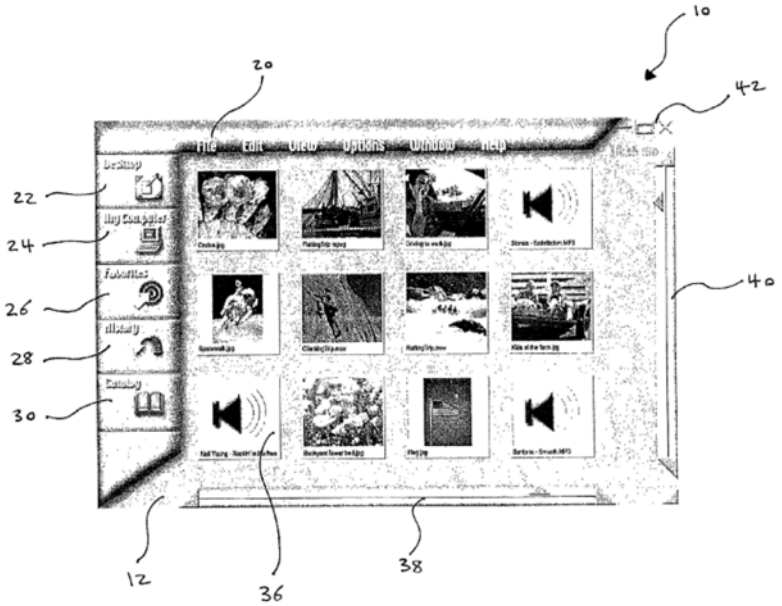

FIG.-4

EX1014, FIG. 4; *see also id.*, FIGS. 4-12, 14, 16, and 17 (each illustrating an interface with a similar layout). The thumbnails may "display images representing movies saved in the AVI and MPEG multimedia file formats." EX1014, ¶50. A

user can "activate video and audio multimedia content directly within the thumbnails," and use player controls such as play, stop, pause, reverse, and fast forward to control playback of a video corresponding to a selected thumbnail image. EX1014, ¶51; *see also* ¶57, FIG. 16.

111. Kaplan further describes that the "Favorites 26 primary option button allows users to store their favorite multimedia content in a convenient and quick to find location." EX1014, ¶42; *see also* ¶44 ("Of course, the user is free to store the multimedia content file in any container 48 they wish."). In order to "facilitate the storage and subsequent retrieval of the multimedia data files, the multimedia management system user interface provides a plurality of predefined functions to uniquely index multimedia files, create an index database file, and create visual representations of the files for later retrieval." EX1014, ¶44. "The indexed file stores a pointer in the management system database to the physical file location, while providing a thumbnail image that can be used to represent the file in the management system user interface." *Id*. Thus, using these pointers, if a thumbnail image corresponding to a movie (*i.e.*, pointer) is displayed in both the "Favorites" and "Catalog" options, but the user deletes the movie from the "Favorites" file, the pointer to the movie in the Catalog option will remain while the pointer to the movie in the Favorite option will be removed.

112. In other words, Kaplan discloses "independently editable" groups of video information.

E. U.S. Patent Application Publication No. 20040201691 ("Bryant") (EX1015)

113. Bryant was filed on April 11, 2003, and published on October 14, 2004. EX1015, front cover. I have been informed by counsel for Petitioners that Bryant is prior art to the '815 patent under pre-AIA 35 U.S.C. §§102(a) and 102(e), and post-AIA §102(a).

114. Bryant discloses the capture and use of digital images and video, for instance, with a digital camera and subsequent storage on a computer. *See* EX1015, ¶¶29, 36-37. Bryant describes techniques for "grouping and classifying digital still images and digital motion images captured using a handheld digital camera" by one or more users:

> The grouping can be done manually by the camera user, by pressing a "new group" button on the digital camera before capturing a group of digital images. The classification can be done manually by the camera user, for example, by identifying a "favorite" image within each group of captured images, using a control button on the digital camera as the user reviews the group of captured digital images on the camera's image display. A user identifier can also be stored along with the classification data, in order to identify the particular camera user for whom the classification was made.

EX1015, ¶29. For example, the digital images and video can be "organized into categories according to the people, places, subjects or events depicted." ¶4.

115. Bryant describes that such "classification provides 'affective information,'" which "usually describes or represents a person's subjective reaction to a given image." EX1015, ¶30. "One very important type of affective information is the level of importance a user associates with an image, such as whether the image is a 'favorite.'" *Id*. This affective information, such as flags, can be stored in the Bryant system "using a 'tag' or 'flag', associated with an image, which indicates whether or not the image has been identified as a 'favorite' or 'important' image for the user." EX1015, ¶31. Favorite images can also "be categorized into a range of levels," such as from "most favorite" to "least favorite." *Id*.

116. Further, Bryant describes that because "[d]ifferent users can have different emotional reactions to the same image," the "affective information relating to images should be associated with a particular user, if the images are to be shared with various users." EX1015, ¶32. This can be accomplished "by associating a user identifier with the affective information," such as favorite. *Id*. "When the affective information is stored in association with a user identifier, it is known as 'personal affective information'." EX1015, ¶33. Thus, Bryant describes

that multiple users can each be associated with a set of "affective information" relating to media content, such as a set of each user's favorite videos.

117. Bryant further discloses several exemplary computer "user interface screens" (*e.g.*, GUIs) that facilitate users in grouping and classifying the multimedia content, for instance as described with respect to FIGS. 9A-9C:

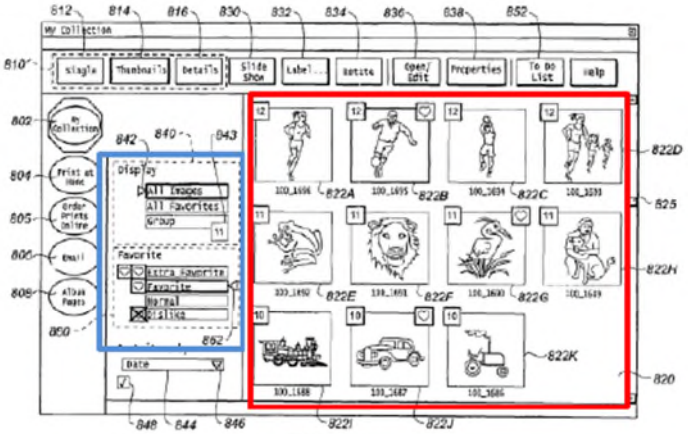

FIG. 9A

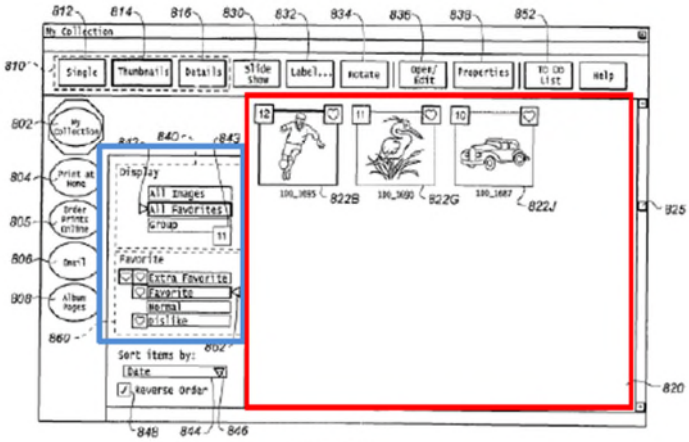

FIG. 9B

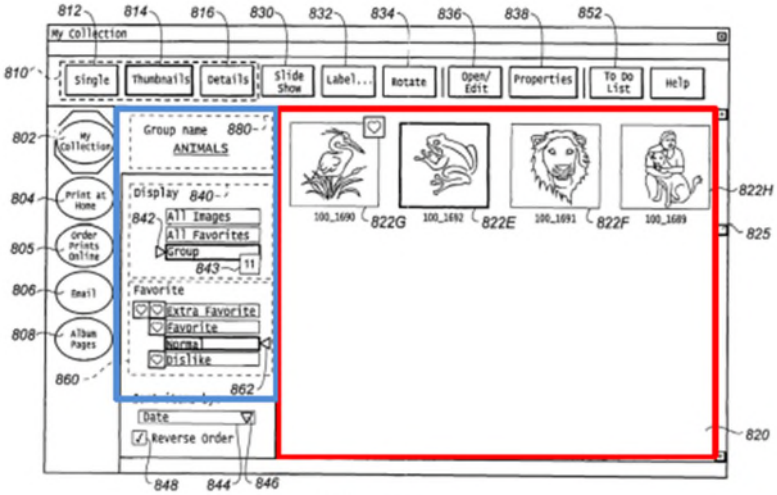

FIG. 9C

EX1005 (annotated to show a first menu area in blue and a second menu area in red). With respect to these user interfaces, Bryant describes:

> FIG. 9A depicts an example of a computer user interface screen for displaying all of the transferred images. A GUI screen 800A includes an area 820 for displaying the thumbnail images provided using the "thmnail" metadata 692 of each object in the general assets table 600 in FIG. 8. By moving a selector 842 within a display selection area 840, the user can select a display of "All Images", a display of "All Favorites", or a display of a "Group" of images selected using a group number/name box 843". In the example of FIG. 9A, the "All Images" display mode is selected".

EX1015, ¶89.

118. In the examples shown in FIGS. 9A-9C, Bryant explains that the local database of the computer (where the images were transferred) "includes a general assets table 600 that includes an image data object 632-652 for each

transferred image," of which there are eleven. EX1015, ¶82. Each data object "includes the table of data fields 610," which includes "a particular type of metadata describing the image." EX1015, ¶83. For example, each data object (*e.g.*, corresponding to an image or video file) may be associated with a "thmnail" (thumbnail), "group" number and name fields, and a "favlevel" field as shown in table 610. *Id*. at ¶¶84-87 (describing metadata). The local database with general assets table 600 and table of data fields 610 corresponding to media object 11 (652) is shown in FIG. 8 of Bryant, reproduced below.

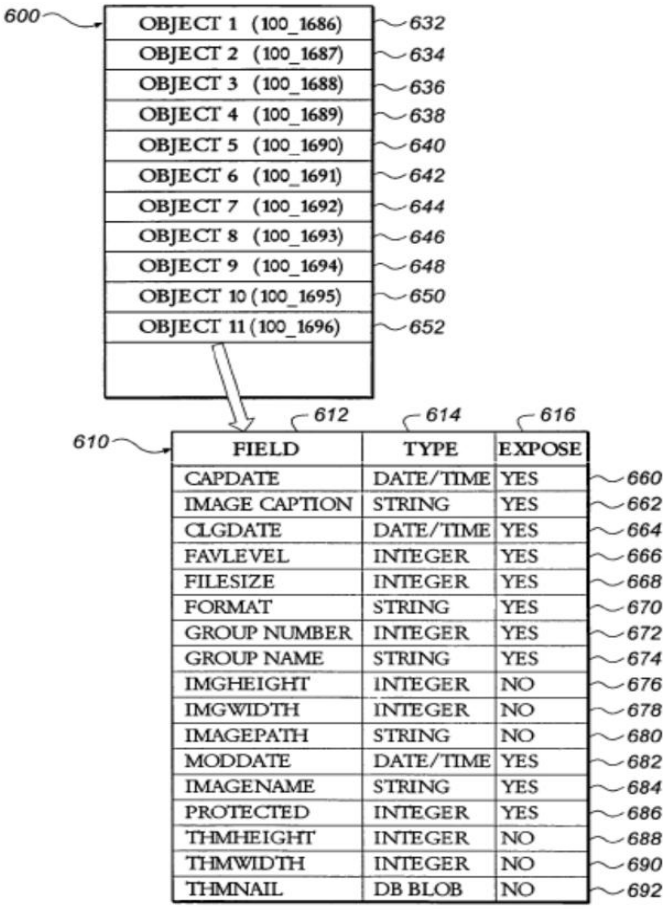

FIG. 8

119. The "thmnail" metadata, *i.e.* thumbnail image, corresponding to each of the eleven media objects is shown in area 820 of FIG. 9A, and "[a]djacent the top left of each thumbnail image 822A-822K is a text box indicating the group to which the image belongs," and "[a]djacent the top right of thumbnail images 822B, 822G, and 822J is an icon including an object indicating a favorite image." EX1015, ¶¶91-92. Thus, Bryant makes clear that a given media file can simultaneously belong to multiple classifications. For example, the crane, 100_1690 (822G), is both a "favorite" and an "ANIMAL/Group 11." *See* EX1015, FIGS. 9B and 9C.

120. Bryant also discloses that even if a media object (*e.g.*, the soccer player 100_1695, 822B) is both classified as a "Favorite" and "All Images" or "12" video information, but is removed as a favorite, the media object will continue to be included in the "All Images" and "12" groups of video information. *See* EX1015, ¶100:

> In block 146 of FIG. 3B the user optionally resets images that are no longer considered favorites. This is accomplished using the favorites level selection area 860. The user first selects one of the thumbnail images (e.g., thumbnail images 822B), and the favorites level selection area 860 then displays the current favorites level. If the user has not previously modified the level, the images are either "Normal" or "Favorite". Using the selector 862, the user can change the level of

the selected image to be an "Extra Favorite", a "Favorite", a "Normal" image, or a "Dislike" image.

Rather than deleting the underlying file, such that it would no longer be in the "All images" or "12" groups, Bryant discloses that "the favorites metadata is updated in the general assets table 600, and the icon displayed next to each thumbnail image is also updated, as was described earlier in relation to block 138." EX1015, ¶101.

121. In other words, the groups of video information in at least "Favorites" and "Groups" are "independently editable" with respect to each other and "All Files" in Bryant.

F. U.S. Patent Application Publication No. 20050160458A1 ("Baumgartner") (EX1016)

122. Baumgartner was filed on January 21, 2004, and published on July 21, 2005. EX1016, front cover. I have been informed by counsel for Petitioners that Baumgartner is prior art to the '815 patent under pre-AIA 35 U.S.C. § 102(e) and post-AIA §102(a).

123. Baumgartner is directed toward an "interactive television system with custom video-on-demand menus based on personal profiles." EX1016, title. The video may be television programming, video on demand content, and other information. EX1016, ¶82. Baumgartner's system 10 shown in Fig. 1 below includes "user equipment" such as a personal computer which receives videos from

a server 36 via a communications network 34 such as the Internet. EX1016, ¶55 (user computer equipment 22 accesses server 36 using communications path 48), ¶57 (video on demand content and video recorded using a network based video recorder are stored on server 36 and provided to user equipment including personal computers), ¶82 (user equipment 22 in Fig. 1 may be a personal computer 98 as shown in Fig. 5 that receives via communications path 48 using input/output 104), and FIGS. 1, 5:

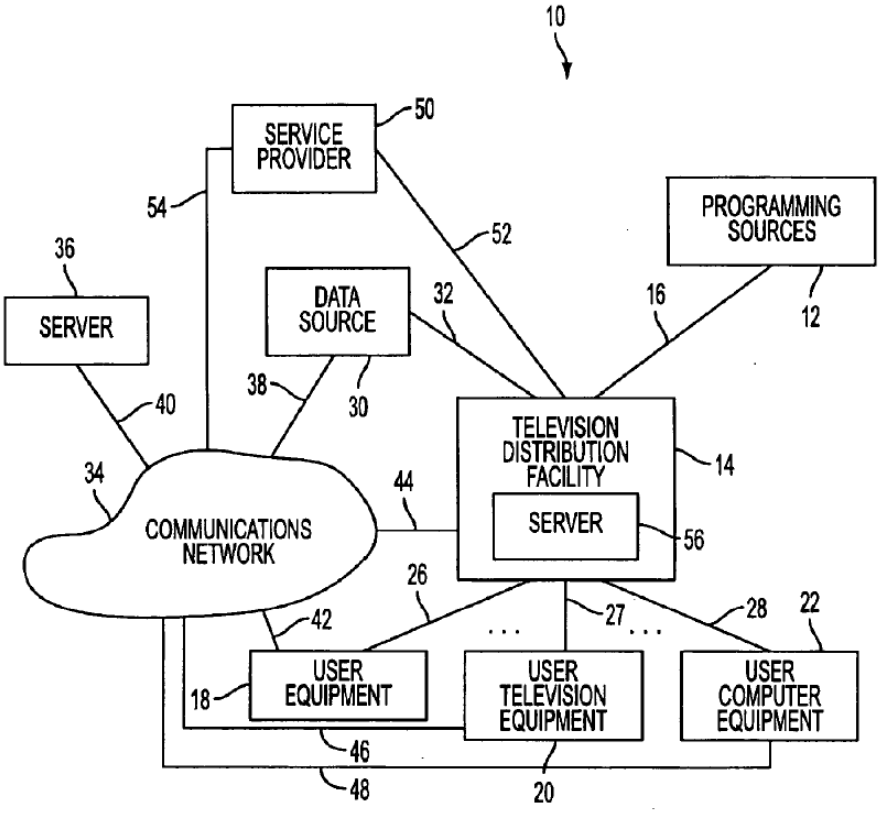

FIG. 1

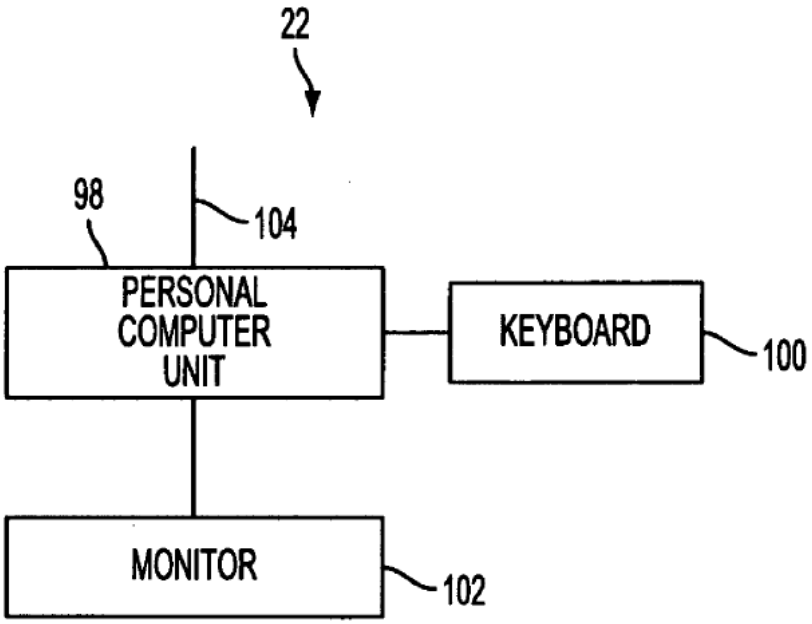

FIG. 5

G. Admitted Prior Art

124. The ’815 Patent admits that “conventional technique[s]” for managing “AV data on a recording medium” were known, and describes a known two-level management scheme for such management:

> In the above-described conventional technique, it is mentioned that the play list indicates the reproduction sequence by linking portions of AV data together. As an example, a management state of AV data on a recording medium in the above-described conventional technique is shown in FIG. 2.
>
> Reference numeral 201 designates AV data themselves on the recording medium.... Reference numeral 202 designates a second management hierarchical level (management level 2) in management

> information. Original cell information #1 to original cell information #3 indicate the whole reproduction range of program units, i.e., a program #1 to a program #3, respectively. Each of user-defined cell information #1 to user-defined information #2 indicates a reproduction range of the whole or a part of a program arbitrarily specified by the user. The number of the user-defined cell information #1 to user-defined information #2 is increased or decreased by the user's editing manipulation. Reference numeral 203 designates a first management hierarchical level (management level 1). Program information contains all of the original cell information #1 to original cell information #3. By conducting reproduction on the basis of the program set information, the user can reproduce all AV data recorded on the recording medium. Play list information #1 to play list information #k indicate a reproduction sequence of the user-defined cell information arbitrarily specified by the user. It is possible to have a plurality of reproduction sequences....

EX1001, 1:63-2:27; *see also id.*, FIG. 2:

FIG.2
PRIOR ART

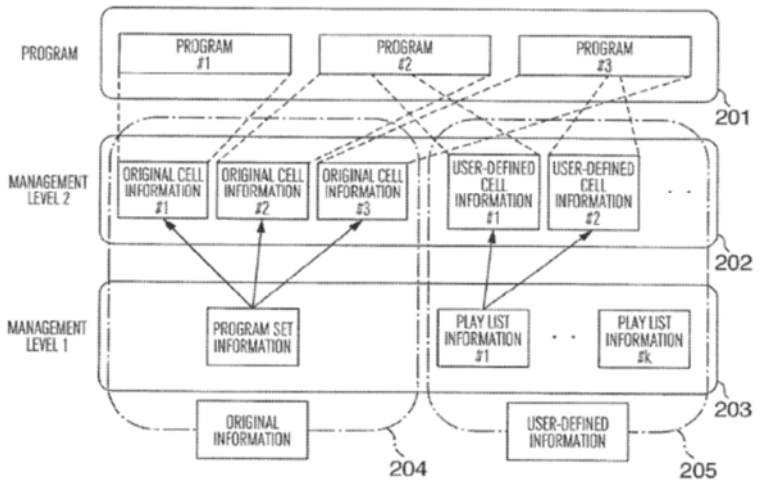

3:17-18 ("FIG. 2 shows a management state of AV data in a conventional technique example."), 1:41-59 (describing existing "recording and reproducing device[s]" with "management information for managing digital data to be recorded is generated and recorded together onto the same recording medium").

125. From this disclosure, a POSITA would have understood that the patent admits that at least: (1) hierarchal management levels for AV data; (2) reproduction of AV data stored on a recording medium; and (3) user-defined playlists, were known. This is consistent with my understanding of the state of the art in the technology area. *See* Section II.B ("Technology Background").

126. I refer to the above descriptions of "conventional technique[s]" and devices as the "Applicant Admitted Prior Art" or "AAPA."

H. U.S. Patent No. 7,650,361 ("Wong") (EX1007)

127. Wong was filed on July 21, 2005 and issued on January 19, 2010. EX1007, (22), (45). I am informed by counsel for Petitioner that Wong is prior art under post-AIA §102(a) under my analysis regarding priority date at the start of this section.

128. Wong discloses a media content playlist generation and access system for a video entertainment network where media content from various disparate networks can be conglomerated into a customized user playlist. EX1007, Abstract. Multiple user accounts allow for customized user playlists. *Id*.

I. U.S. Patent Application Publication No. 20030174844A1 ("Candelore") (EX1013)

129. Candelore was filed on March 11, 2003 and published on September 18, 2003. EX1013, (22), (43). I have been informed by counsel for Petitioners that Candelore is prior art to the '815 patent under pre-AIA 35 U.S.C. §§ 102(a), 102(b) and post-AIA §102(a).

130. Candelore discloses "[a]n encryption algorithm such as DES, M6, or DVB Common Scrambling Algorithm may be used" to encrypt received control words. EX1013, ¶72. "The encrypted control word 1643 is decrypted using the unique key 1631 (or derivative thereof) to recover the control word in a clear format for descrambling and/or decrypting the encrypted content 1620 loaded into the set-top box 1610." EX1013, ¶131; see also ¶72 ("[t]he decrypted CW is then

used by descrambler logic 470 to descramble the scrambled program content 480 and output clear program content 490.”).

VI. GROUND 1: HORN AND BAUMGARTNER RENDER OBVIOUS CLAIMS 1-6 AND 9-13

A. Motivation to Combine Horn with Baumgartner

131. At the time of the ’815 patent, it would have been obvious to a POSITA to combine Horn with Baumgartner by configuring a personal computer with functionality such as a Metadata Filing System (MFS) and associated content management software for managing information including movies, photos and music as taught by Horn to receive, locally store, and manage video information including video on demand content and television programs via a wireless connection to the Internet and associate such information with user profiles as taught by Baumgartner. A POSITA would have been motivated to and capable of combining the disclosures of Horn and Baumgartner to do so.

132. Horn discloses that “[a] primary use of computer information systems is the creation, organization, transmission and storage of ***information of a variety of types in the form of content data***, including but not limited to ... ***photographs***; ***sounds***; [and] ***music***.” EX1005, 1:34-43.[8] The patent’s disclosed MFS system “comprises one or more application(s) for organizing all types of text and image

[8] All emphasis, color, and annotations are added, unless otherwise indicated.

information-from word processing documents and spreadsheets; to web pages and multimedia; to illustrations, ***images***, ***movies***, and ***photographs***; to contacts, notes, and appointments; ***to sounds and music***; ***or anything else that is stored and retrieved on a computer***." EX1005, 12:8-18. One of the benefits of Horn is its utility across all content data types.

133. A POSITA would have understood video information was among the content data and information Horn organizes, indexes, and views. Although Horn focuses on photographs and music, Horn explicitly discloses video information, *i.e.*, "movies." EX1005 at 12:13. Baumgartner is directed toward a system for managing a user's access to videos, including video-on-demand content such as movies. EX1016, ¶8. Baumgartner discloses embodiments in which a user's device is a personal computer like Horn's that obtains video information from a server via the Internet as in Horn. EX1016, ¶¶54-55, 82, and Figs. 1, 5. Horn does not disclose how to implement such an Internet connection, whereas Baumgartner discloses a wireless implementation of an Internet connection to server 36. EX1016, ¶54, Fig. 1. Additionally, Baumgartner explicitly discloses storing video information on the computer's hard disk drive. EX1016, ¶85. Thus, a POSITA would have looked at Baumgartner to improve Horn, and vice-versa.

134. A POSITA would have recognized the benefit of managing Baumgartner's video information using the techniques taught in Horn because

video information recorded on the user's computer was among the plethora of digital content the user needed organized, indexed, and viewed at the time of Horn and Baumgartner. A POSITA would have understood that the management of Baumgartner's video information enhances the utility of Horn by providing this type of content. The benefit of providing the organization, indexing, and viewing of video information, including the association of user profiles with video information as taught by both Horn and Baumgartner, would have motivated the POSITA to make the combination. Because Horn discloses a connection to the Internet and a LAN but does not provide any implementation details for that connection, a POSITA would similarly look to Baumgartner for additional detail for that implementation.

135. Combining Horn with Baumgartner would simply involve applying known techniques (*i.e.*, wirelessly receiving video information via the Internet on a computer as taught by Baumgartner) to a known device ready for improvement (Horn's computer system for content management) to yield predictable results (recording and playing back video information on a computer). I understand that if a technique has been used to improve one device, and a person of ordinary skill in the art would recognize that it would improve similar devices in the same way, then using the technique is obvious. Therefore, a POSITA would recognize Baumgartner's obvious utility in enhancing Horn as a content management and

playback platform for "anything ... that is stored and retrieved on a computer." EX1005, 12:8-18.

136. A POSITA would have had a reasonable expectation of success in the combination because Horn is explicitly designed to organize, index, and view a plurality of nearly every type of "content data" at the time, including images and movies, which is a form of Baumgartner's video information. EX1005, 1:34-43, 12:8-18. A POSITA thus would have had a reasonable expectation that the modification of Horn with Baumgartner would be successful because a POSITA would have found that the teachings of Horn and Baumgartner could have been predictably combined due to the predictability of the computer system art and the known interchangeability of the various elements, including file storage, organization, recording, and playback, and wireless communication and networking.

137. Therefore, in my opinion a POSITA would have considered it obvious to include the video information and functionality of Baumgartner, including but not limited to user profiles and wireless communications for receiving video information, in Horn for the benefits described above.

B. Claim 1

1. [1pre] An information processing apparatus comprising:

138. To the extent the preamble is limiting, Horn discloses an information processing apparatus. For example, Horn discloses that "[t]he invention relates to computer data processing systems that include central processing units configured with novel software-based information management systems." EX1005, 1:18-30, Title, Abstract, 5:27-6:23, FIG. 1.

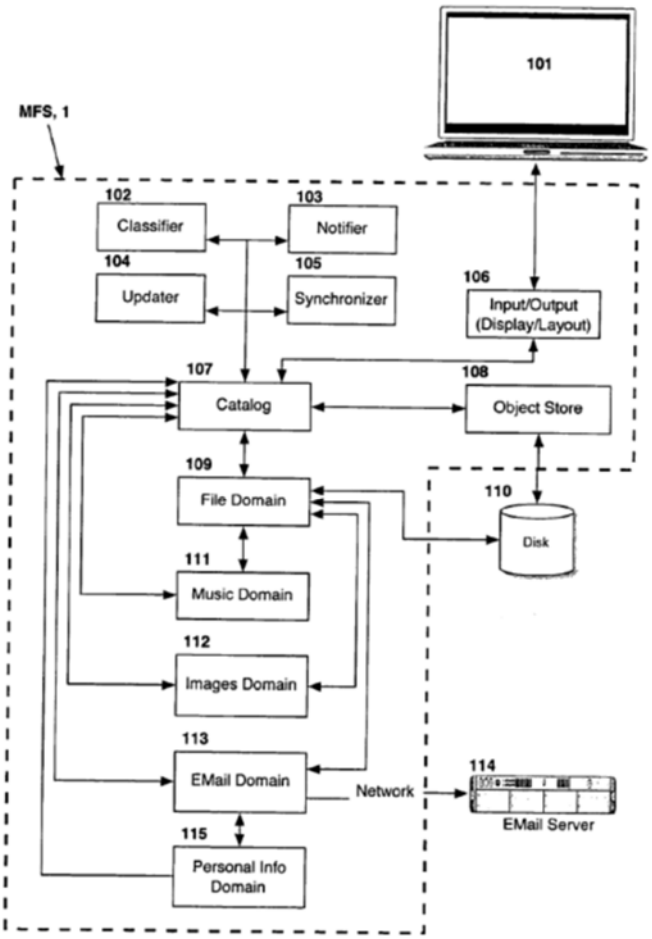

Figure 1

2. [1a] a network interface;

139. Horn discloses a network interface: "said central processing unit reading from user, network or Internet server input devices data relating to objects received by, created by or selected by individual users," EX1005, 6:11-22, and "[a] network interface is coupled to the bus to provide an interface to the data communication network (LAN, WAN, and/or Internet)," 6:59-63, 5:57-60, 11:60-12:7, FIG. 1.

3. [1b] a recording medium on which is stored a plurality of video information including first video information received wirelessly by the network interface over a network from another information processing apparatus,

140. The Horn-Baumgartner combination renders obvious this limitation.

141. For example, Horn discloses a memory unit (a "recording medium") receiving digital image information over a network, *e.g.*, the Internet, at 11:60-12:18:

> [A] computer system comprising a computer 101 with an output display screen, an input keyboard and ***a memory unit***, such as a hard drive, 110, and one or more network link(s) via an e-mail server 114. ... Representative domains viewable on the desktop include a file domain 109, a music domain 111, images domain 112 an e-mail domain 113 .... ***The e-mail domain is linked through a network for the communication of files, music and images to and from a network link, e.g. the Internet.***

See also EX1005, Abstract, 5:21-6:22, 6:50-58, FIG. 1 (disk 110):

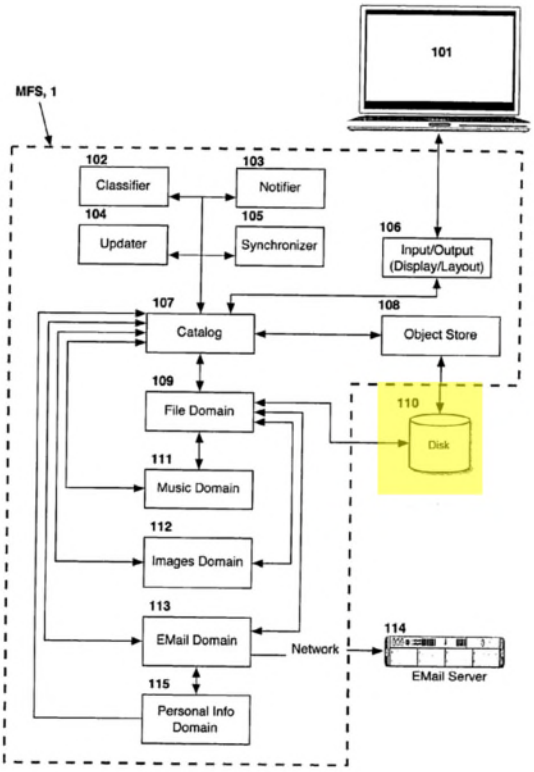

Figure 1

142. Horn discloses that this digital information is received by the network interface as discussed above for limitation [1a].

143. Horn does not expressly disclose that the digital video information is received by the network interface wirelessly. As discussed in limitation [1a], Horn discloses the network interface can be connected to the Internet via a LAN. *E.g.*, EX1005, 6:59-63. A POSITA would have understood that a LAN is often implemented as a wireless LAN, and a POSITA would have found it obvious to implement Horn's LAN with a wireless LAN because they were often cheaper and easier to install than a wired LAN due to elimination of the need to run wires to all

of the endpoint computers in the network. Additionally, wireless LANs can be more convenient for users.

144. Baumgartner is directed toward an "interactive television system with custom video-on-demand menus based on personal profiles." EX1016, title. Baumgartner discloses a system 10 shown in Fig. 1 below in which "user equipment" such as a personal computer (*e.g.*, Horn's computer 101) receives and locally stores videos from a server 36 via a communications network 34 such as the Internet over a link 48 which is implemented wirelessly or over a wireless satellite link. EX1016, ¶55 (user computer equipment 22 accesses server 36 using communications path 48, which may be "any suitable paths, such as wired paths . . . **satellite paths, wireless paths**, a combination of such paths, etc."); ¶57 (video on demand content and video recorded using a network based video recorder are stored on server 36 and provided to user equipment including personal computers), ¶82 (user equipment 22 in Fig. 1 may be a personal computer 98 as shown in Fig. 5 that receives television programming, video on demand content, and other information receiving via communications path 48 using input/output 104); ¶85 (storage in personal computer unit 98 such as a hard drive or other suitable storage device may be used to store video and other content); Figs. 1, 5:

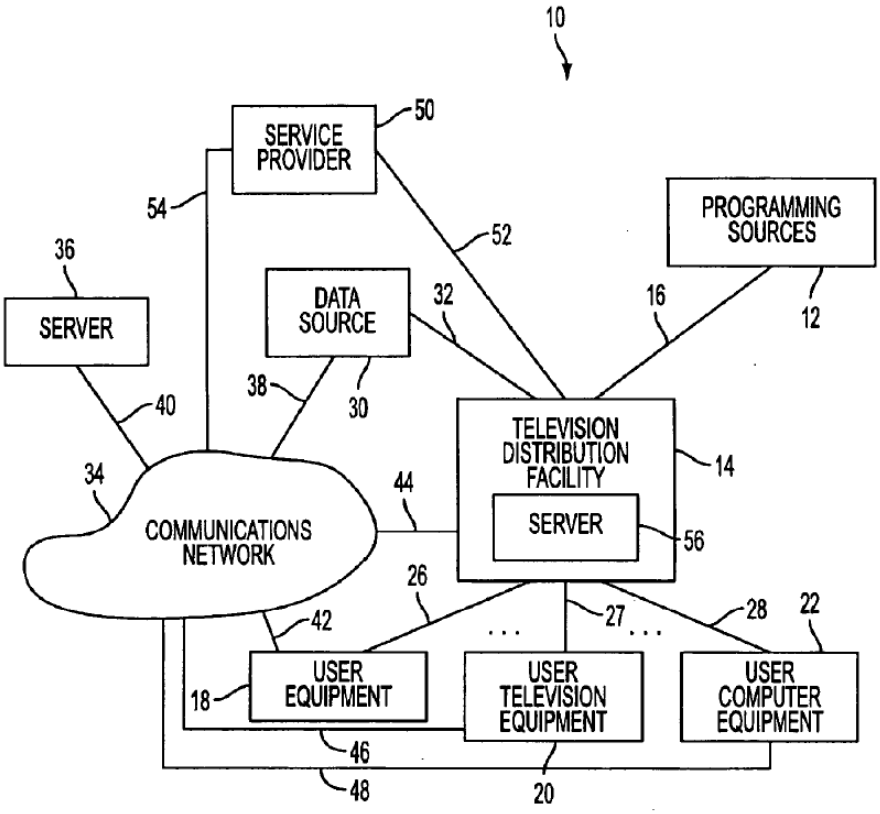
10
SERVICE PROVIDER
50
54
52
PROGRAMMING SOURCES
36
SERVER
DATA SOURCE
32
16
12
38
30
40
TELEVISION DISTRIBUTION FACILITY
14
34
44
COMMUNICATIONS NETWORK
SERVER
56
26
42
27
28
22
USER EQUIPMENT
USER TELEVISION EQUIPMENT
USER COMPUTER EQUIPMENT
18
46
48
20

FIG. 1

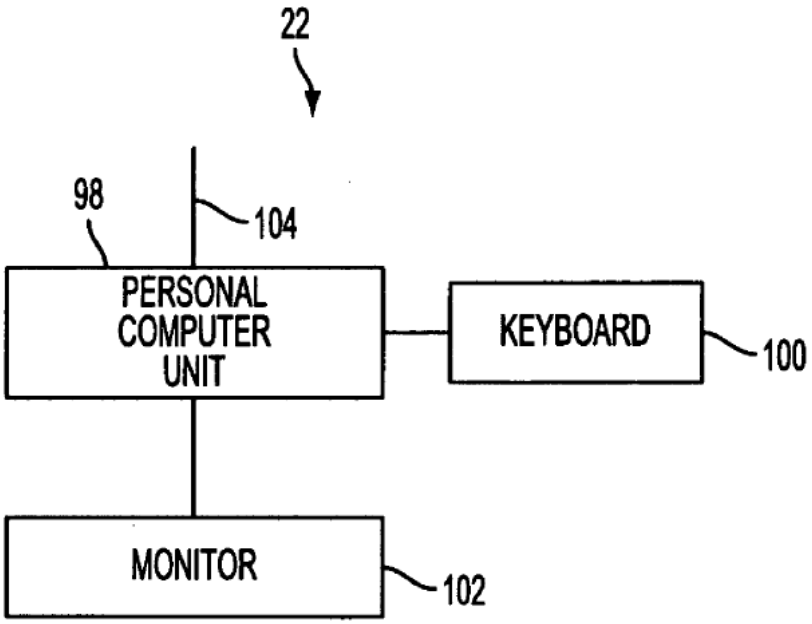

FIG. 5

145. Based on Baumgartner's modification to Horn, and Horn's disclosure that its digital image information also includes video information, *i.e.*, "movies," EX1005, 12:8-18, a POSITA would have understood that digital information including video information/movies received via the Internet would be transmitted wirelessly to Horn's computer from a server (referred to in Horn as a "site computer"), which is an information processing apparatus. EX1005, 6:59-63.

4. [1c] wherein at least some of the plurality of video information is associated with a user profile;

146. To the extent that the ’815 patent discloses this limitation,[9] the Horn-Baumgartner combination renders this limitation obvious. Horn discloses that at least some of the plurality of information is associated with a user profile: “so as to provide information management tools that facilitate communication to generate, transmit and receive, archive, search, order, retrieve and render objects, ***including information organization personalized for each individual user based on preferences selected by the user***.” EX1005, 6:11-22, 3:35-43.

Horn discloses at 8:58-67:

> Collections: ... allow[] users to categorize objects in ways that most clearly reflect different approaches and ways of viewing the same information. Users can select predetermined collections provided in a basic menu, such as Family, Friends, Work, To Do, Activities, and Vacation when running the MFS program for the first time, and can create and set up user-defined collections as well.

EX1005, 15:12-27. Horn also discloses that “[u]ser-defined categorization is enabled by a user directly specifying that a given object belongs to a given

[9] The ’815 patent does not include the word “profile” other than in the claims. Petitioners reserve the right to assert that this term is indefinite and/or lacks written description and enablement in the ’815 patent and applications to which priority is claimed by the ’815 patent.

collection." EX1005, 6:5-23. When a user specifies that a given object belongs to a user-defined collection, that object becomes associated with a user profile.

147. Baumgartner also discloses videos associated with user profiles. Baumgartner discloses a user profile that may include information such as a user's demographic characteristics, likes and dislikes, information gathered by monitoring the user's interaction with the user's user equipment, and more broadly "any information that may be indicative of the user's interests." EX1016, ¶10. Baumgartner further discloses identifying video information that correlates to the user profile and presenting that video information for selection by the corresponding user. EX1016, ¶¶11-13. This creates an association of that video information with the corresponding user profile as broadly claimed in the '815 patent.

5. [1d] a display; and

148. Horn and Baumgartner each disclose, and their combination renders obvious, this limitation. Horn discloses a display: "FIG. 1 illustrates a computer system comprising ***a computer 101 with an output display screen***." EX1005, 11:60-12:7.

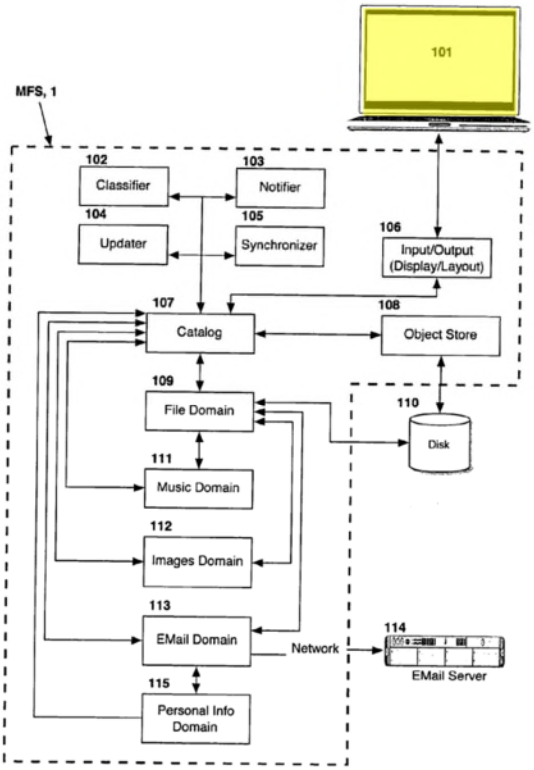

Figure 1

149. Baumgartner also discloses a display, the monitor of user personal computer 101. EX1016, ¶82, Fig. 5.

6. [1e] a processor for controlling the display to display:

150. Horn and Baumgartner each disclose, and their combination renders obvious, this limitation. Horn discloses a processor for controlling the display to display the areas and information in limitations [1f]-[1m]. For example, Horn discloses "[a] computer used in the inventive system typically includes ***at least one processor*** and memory coupled to a bus." EX1005 at 6:40-50. Baumgartner discloses that personal computer unit 98 of Fig. 5 includes one or more

microprocessors used to run the interactive TV application that displays video to the user. EX1016, ¶84.

7. [1f] a first area including a first character associated with a first group of video information for a first classification and a second character associated with a second group of video information for a second classification different from the first classification,

151. The Horn-Baumgartner combination renders this limitation obvious. Horn discloses Workspace view in Fig. 26 that includes a first area 2602 (outlined in red below) that includes a list of all collections (*i.e.*, groups of photos, which would be shown in the content pane 2603 for a selected collection). Each item in the list of collections in this first area 2602 includes a name that includes at least one character. In Fig. 26 below, one item in the list, *e.g.*, "Scandinavia" (highlighted in blue) includes a first character (i.e., the portion of the item that is clicked to select it, which can include the "S" in "Scandinavia") associated with a first group of information (in this case, photos in the Scandinavia collection) for a first classification (photos classified by the user as being related to Scandinavia), and a second item in the list, *e.g.*, "Today" (highlighted in green) that includes a second character (i.e., the portion that is clicked, which can include the "T" in "Today") associated with a second group of information (in this case, the photos modified or created today that constitute a "Today" collection) for a second classification (items created or modified today) that is different from the first

classification. EX1005, 19:25-47; *see also* 17:11-17 (explaining meaning of "Today" collection in the context of email). This is consistent with the way the '815 patent describes clicking on a graphical representation of the character in FIG. 5 to get to the "Mother" 601 display in FIG. 6. EX1001, 6:5-27. Although the Workspace view is illustrated using photos in Horn, a POSITA would have understood or at least found obvious to utilize Horn's Workspace view to allow a user to select and view video information such as movies as taught by both Horn and Baumgartner.

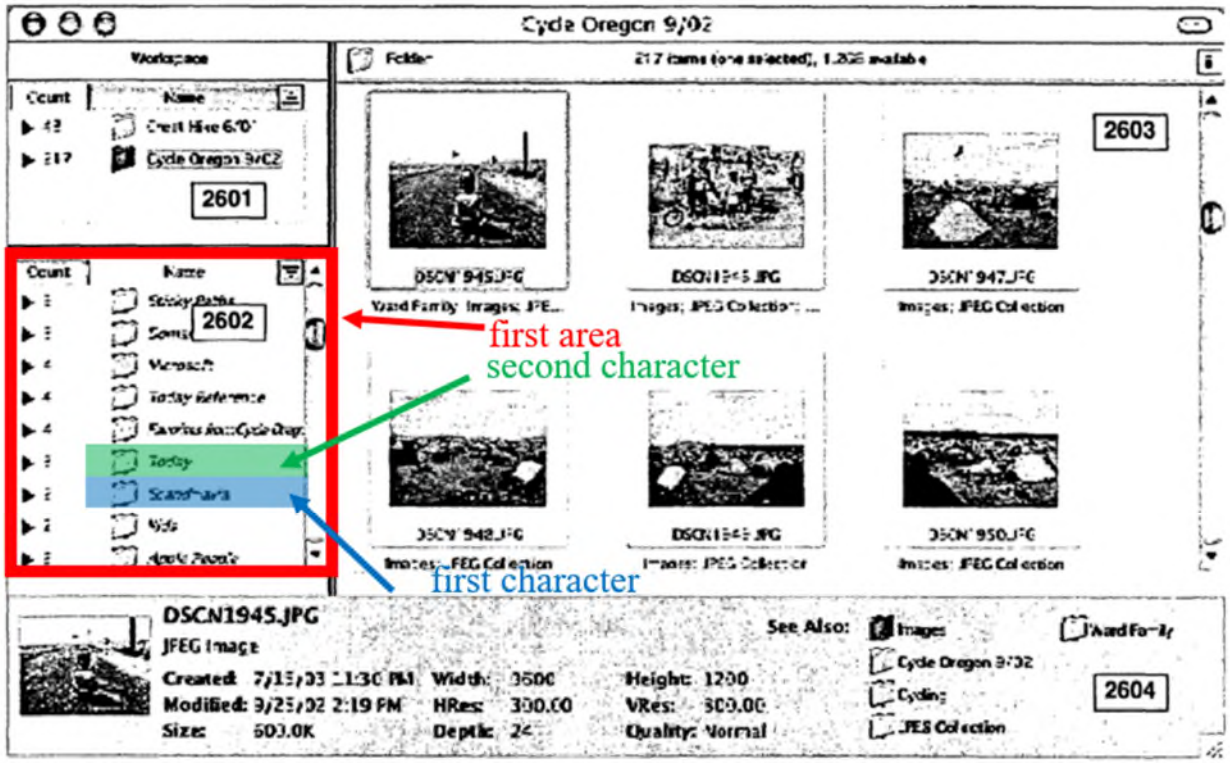

8. [1g] the first group of video information being configured to allow a user to edit,

152. The Horn-Baumgartner combination renders this limitation obvious. Horn discloses the first group of information, *i.e.*, a collection, is configured to allow a user to edit membership in the collection by, *e.g.*, adding and removing objects (individual items, such as individual photos) to/from the collection. Horn discloses at 20:16-46:

> Manually Categorizing Objects into Collections. The user may now view images from any of the source folders, and by dragging their icon representations to either the collection window or the icon representation in the Workspace, add those images to the collection. ... The user may also quickly create a collection of images by selecting the images and choosing the Collect command; this gathers together the images into a collection, which then may be renamed by the user. Items may be re-categorized into different collections by dragging them to the new collections directly. Also, items may be removed from a collection by choosing the Remove command ....

EX1005, FIG. 30. Horn also discloses "[b]ecause MFS remembers settings and views, the user can set up collections and preferred ways of viewing them and keep them available at all times, constantly updated." EX1005, 17:18-45, FIGS. 21-22. While Horn illustrates this concept using images/photos, a POSITA would have understood or at least found obvious to provide this same functionality for collections of video information such as movies as taught by both Horn and Baumgartner.

9. [1h] wherein the first group of video information and the second group of video information are part of the plurality of stored video information, and

153. The Horn-Baumgartner combination renders this limitation obvious. Horn discloses that the collections that form the first and second groups of information are part of the plurality of stored information objects. EX1005, 4:1-5; 4:51-60; 19:42-45; 30:44-31:16. Horn explains that the objects viewed by reference are from collections. *Id.*; *supra* [1g]. More specifically, Horn discloses a classifier process that manages objects (such as files or data) within a system. *Id*., 29:18-49. This process involves handling events related to object additions, property changes, and removals. *Id*. When an object is added, the classifier determines the set of containers (such as folders or collections) to which it belongs. *Id*. If an object's properties change, the classifier reclassifies it, identifying the containers it should now be part of. *Id*. The classifier maintains an "added set" (containers for adding an object) and a "removed set" (containers from which an object should be removed). *Id*. Overall, the classifier ensures that each object ends up in the correct set of containers based on its current property values. *Id*. A POSITA would have understood that Horn discloses the limitation regarding video information groups being part of the stored video information.

10. [1i] a second area displaying thumbnails corresponding to at least a portion of the plurality of stored video information,

154. The Horn-Baumgartner combination renders this limitation obvious. Horn discloses a second area (*e.g.*, content pane 2603, highlighted in purple below) displaying thumbnails corresponding to at least a portion of the plurality of stored information, *i.e.*, thumbnails for the objects in the collection selected from the list of collections in the collection pane 2602). EX1005, 19:48-54 and Fig. 26:

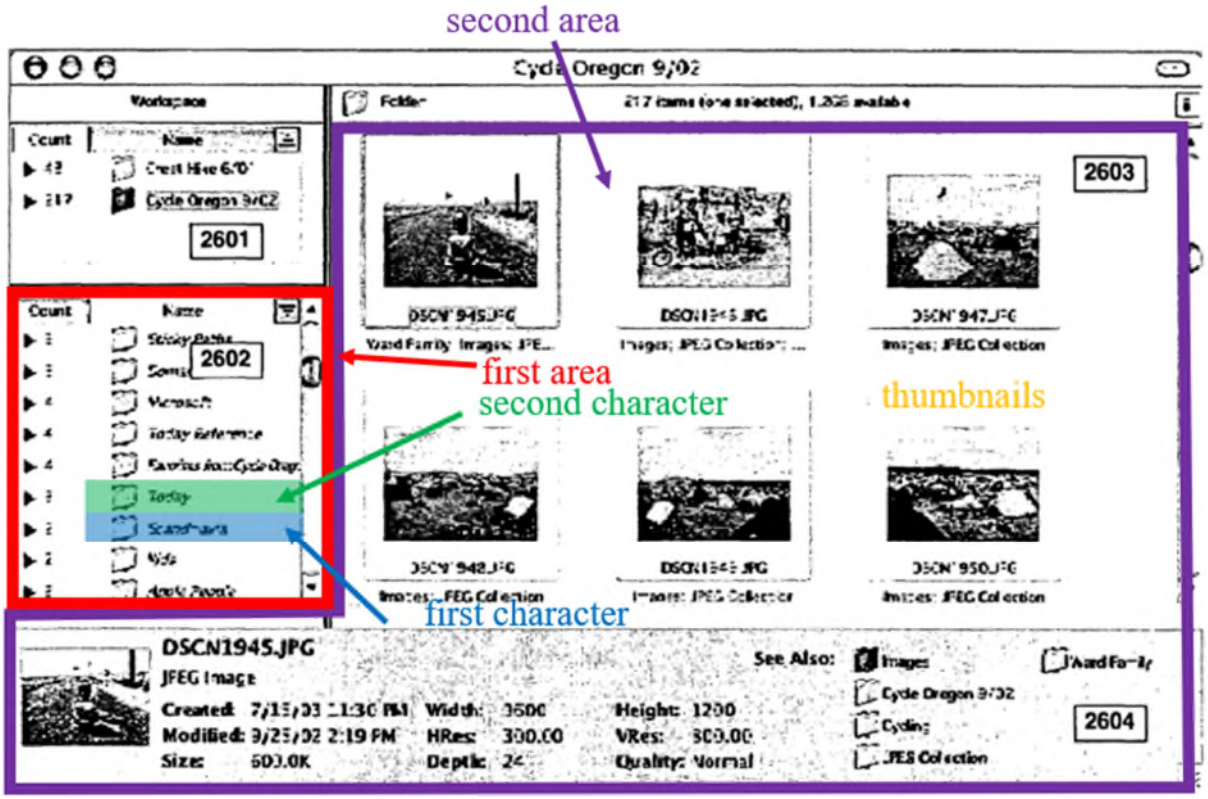

Horn also discloses at 19:25-57:

The windows display the images in a variety of ways, including well-known icon and list views showing icons representing either the type of the file (such as a Photoshop JPEG file) or a miniature 'slide' view

(***thumbnail***) of the image itself. ... a content pane, which dynamically displays the contents of whatever item is selected in the first two views (2603) ....

155. For the reasons discussed above, a POSITA would have understood or at least found obvious to provide this same functionality for collections of video information such as movies as taught by both Horn and Baumgartner.

11. [1j] wherein user selection of the first character enables the display of a first group of thumbnails corresponding to the first group of video information in the second area,

156. The Horn-Baumgartner combination renders this limitation obvious. Horn discloses that the content pane 2603 "dynamically displays the contents of whatever item is selected in the first two views (2603). In the case of a folder or collection, the contents of the folder or collection is shown in an icon or list view." EX1005, 19:48-51; *see also* 19:25-34. A POSITA would have understood that "icon view" in this passage means the display of thumbnails as shown in Fig. 26 above for the selected collection (*e.g.*, the objects in the Scandinavia collection), and would have further understood or found obvious to provide this same functionality for collections of video information such as movies as taught by both Horn and Baumgartner.

12. [1k] wherein user selection of the second character enables the display of a second group of thumbnails corresponding to the second group of video information in the second area,

157. The Horn-Baumgartner combination renders this limitation obvious. For the same reasons discussed above for limitation [1j], a POSITA would have understood that selection of the second character for the Today collection in the collections pane 2602 would result in the display of thumbnails of the objects (which could be videos) in the Today collection in the content pane 2603, which would be different from the collection of objects displayed for the Scandinavia collection.

13. [1l] wherein, upon one video information stored on the recording medium included in both the first group of video information and the second group of video information being deleted from the first group of video information, the one video information continues to be included in the second group of video information and

158. The Horn-Baumgartner combination renders this limitation obvious. For example, Horn discloses "storing only one instance of each object while linking the object to multiple collections and domains by unique metadata links for the grouping into and retrieval from any of the collections." EX1005, Abstract.

Horn also discloses at 20:16-46:

> Items from any source may be dragged in this way to any collection, and items may belong to more than one collection at a time. ... ***[I]tems may be removed from a collection*** by choosing the Remove command, ***which removes the items from the collection but does not***

otherwise delete the items from the source (e.g. the file system) or any other collections.

Supra § IV.D (Claim Construction).

14. [1m] the processor controls the display to display a thumbnail corresponding to the one video information as one of the second group of thumbnails when the second character is selected.

159. The Horn-Baumgartner combination renders this limitation obvious. In view of the disclosure in Horn in limitations [1k] and [1l] discussed above, a POSITA would have understood that selection of the second collection (*e.g.*, the Today collection) in the collection pane 2602 would result in the display of thumbnails for all objects in the second collection in the content pane 2603 even if one of those objects had been deleted from a different collection, and a POSITA would have found it obvious to provide this same functionality for video information such as movies as taught by both Horn and Baumgartner.

C. Claim 2. The information processing apparatus of claim 1, further comprising: wherein the processor generates a group of video information based on user preferences determined by the user selections of the video information, and wherein, upon user selection of the group, the processor controls the display to display thumbnails that correspond to the video information and no other thumbnails associated with video information of other users.

160. The Horn-Baumgartner combination renders this limitation obvious. Horn and Baumgartner render obvious the apparatus of claim 1. *Supra* claim 1. PO

alleges that this claim includes the generation and display of a group of video information that includes only videos selected by a user for inclusion in a group. EX1017, 153-155. Horn discloses that the processor (*supra* [1e]) generates a group of information including only objects selected by a user. For example, Horn discloses "so as to provide information management tools that facilitate communication to generate, transmit and receive, archive, search, order, retrieve and render objects, ***including information organization personalized for each individual user based on preferences selected by the user***." EX1005, 6:11-22; *see also* 3:35-43.

161. Horn discloses at 8:58-67:

> Collections: ... allow[] users to categorize objects in ways that most clearly reflect different approaches and ways of viewing the same information. Users can select predetermined collections provided in a basic menu, such as Family, Friends, Work, To Do, Activities, and Vacation when running the MFS program for the first time, and can create and set up user-defined collections as well.

Horn also discloses that "User-defined categorization is enabled by a user directly specifying that a given object belongs to a given collection ...." EX1005, 15:12-27, 16:5-23. As another example, Horn discloses "Favorites" that are shown in FIGS. 5, 7B, and 11A. Favorites are quite common and thus understood by a POSITA - including having the characteristic that unfavoriting of an item would not delete the original of that item.

162. Horn discloses that, upon user selection of the group, the processor controls the display to display thumbnails that correspond to the information and no other thumbnails associated with information of other users. *Supra* [1i]-[1j]. The Horn-Baumgartner combination renders obvious video information. *Supra* [1b].

D. Claim 3. The information processing apparatus of claim 1, further comprising: an antenna for wirelessly receiving the first video information from the other information processing apparatus.

163. The Horn-Baumgartner combination renders this limitation obvious. Horn and Baumgartner render obvious the apparatus of claim 1. *Supra* claim 1. As discussed above for limitation [1b], Horn discloses a connection to the Internet, and Baumgartner discloses that the connection can be wireless. EX1016, ¶55. A POSITA would have understood that for the Horn-Baumgartner apparatus to wirelessly receive the first video information from the Internet, an antenna would be required and in any event would have found it obvious to include an antenna for such a wireless connection because the use of antennas for wireless and satellite connections was ubiquitous. For example, U.S. Patent No. 6,259,418 ("Jones"), "Modified Monopole Antenna," was filed 1/20/2000 and issued 7/10/2001. EX1018, front cover. Jones discloses an antenna suitable for use in a standard PCMCIA personal computer card with an 802.11 wireless LAN. EX1018, Abstract, 1:17-35, 2:17-26, 4:20-36, 6:26-36, FIG. 6, claims 1, 10, 15, 17.

E. Claim 4.

1. [4a] The information processing apparatus of claim 1, wherein the plurality of stored video information includes third video information recorded by the information processing apparatus, fourth video information, and fifth video information,

164. The Horn-Baumgartner combination renders this limitation obvious. Horn and Baumgartner render obvious the apparatus of claim 1. *Supra* claim 1.

165. Horn discloses that the plurality of stored information includes third information (*e.g.*, a third image file), fourth information (*e.g.*, a fourth image file), and fifth information (*e.g.*, a fifth image file). EX1005, FIG. 26 (showing more than 5 thumbnails). For example, Horn discloses at 18:52-58 that "[t]he use described below is of organizing and retrieving images created with a digital camera and stored on the computer in individual image files," and at 19:6-16 that "a particular computer user has taken thousands of digital images with his/her digital camera, in various places, including images of various friends and family." The Horn-Baumgartner combination renders obvious video information. *Supra* [1b].

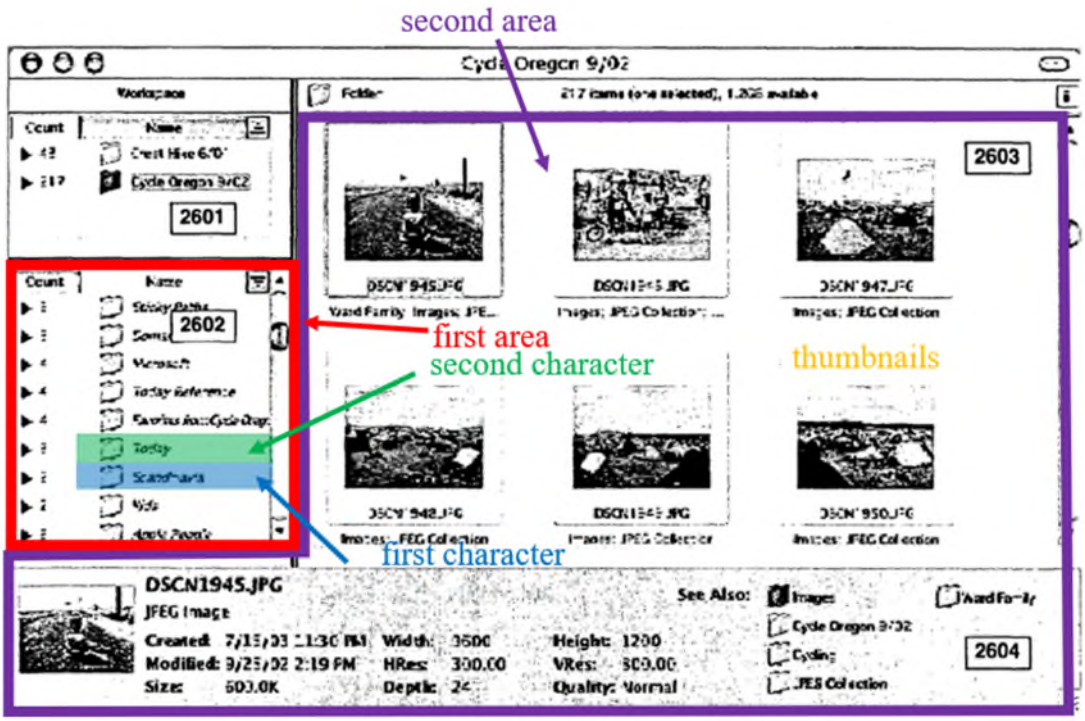

2. [4b] wherein the display displays a user interface having thumbnails corresponding to each of the third, fourth, and fifth video information.

166. The Horn-Baumgartner combination renders this limitation obvious. Horn discloses that the display displays a user interface having thumbnails corresponding to each of the third, fourth, and fifth information. *Supra* [1i]-[1k]; *see also* EX1005, FIG. 26 (showing more than 5 thumbnails):

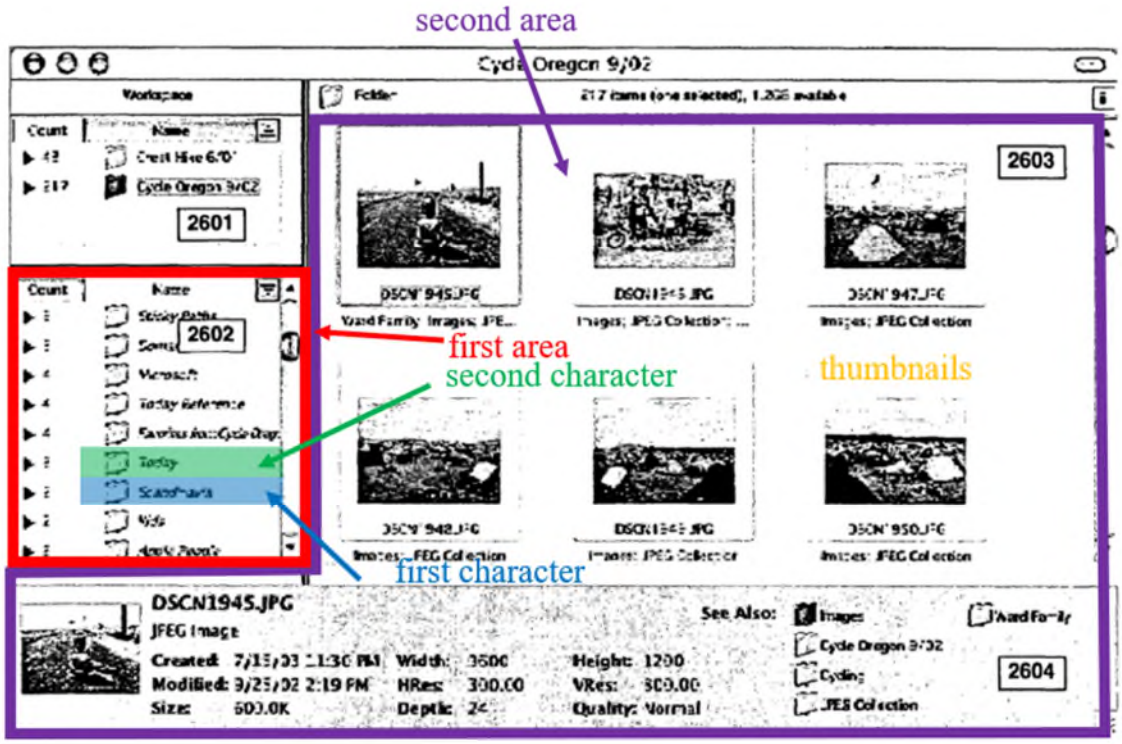

The Horn-Baumgartner combination renders obvious video information. *Supra* [1b].

F. Claim 5. The information processing apparatus of claim 4, wherein the display displays the third, fourth, and fifth video information according to predetermined playback sequence.

167. The Horn-Baumgartner combination renders this limitation obvious. Horn and Baumgartner render obvious the apparatus of claim 4. *Supra* claim 4. The Horn-Baumgartner combination renders obvious video information as discussed above. Horn also discloses that the display displays the third, fourth, and fifth information according to predetermined playback sequence because it discloses that the user can organize information, which a POSITA would have understood could be played back in the organized manner. For example, Horn

discloses "[a]nother feature of the inventive MFS-configured computer system enables the user to ***organize all kinds of information***, not merely simple files, ***through a drag-and-drop windows-and-icons software functionality***, making it easy to organize objects and cross-reference them from place to place using a desktop-style interface." EX1005, 9:1-16; *see also* 17:62-18:27; 19:6-20:14; 23:25-32.

168. Horn does not explicitly disclose a playback sequence for objects in a collection. However, playback sequences, which are commonly referred to as playlists, were well-known in the art at the time of the '815 patent. The '815 patent admits that playlists for video were known in the art. EX1001, 1:54-59 (referring to exemplary playlists disclosed in prior art patent JP-A-2000-152180, EX1020, "AAPA", *see also* translation of same in EX1021). Other prior art also discloses playlists that are used to play back digital objects such as videos in a predetermined playback sequence, including, *e.g.*, Kaplan. EX1014, ¶¶6, 9, 56-57. It would have been obvious to a POSITA to incorporate playlist functionality such as disclosed in AAPA and Kaplan for displaying (playing back) objects such as videos/movies in one of Horn's collections in a predetermined order (*e.g.*, the order in which objects were added to the collection or a date order). A POSITA would have been motivated to improve the Horn-Baumgartner combination by implementing such playlist technology to provide a simple way for a user to view

content in a collection without the burden of individually selecting thumbnails in a collection. A POSITA would have had a reasonable expectation of success in implementing such playlist technology because playlists were conventional and doing so required only ordinary skill in the art.

G. Claim 6.

1. [6a] The information processing apparatus of claim 1, wherein the plurality of stored video information includes third video information, fourth video information, and fifth video information,

169. The Horn-Baumgartner combination renders this limitation obvious. *Supra* [4a].

2. [6b] wherein the plurality of stored video information includes management information corresponding to the third, fourth, and fifth video information,

170. The Horn-Baumgartner combination renders this limitation obvious. Horn discloses that the plurality of stored information includes management information corresponding to the third, fourth, and fifth information, including file names and timing information. For example, Horn discloses: "[e]xamples of metadata properties in the inventive application software system include ... names," 4:31-50, FIG. 3, "matching dates and times, including date and time ranges," 9:17-24, "Time Orientation," 9:46-52, 12:50-62, 13:53-14:38 (filenames), 15:28-49 (time-based collections), 18:28-33 (time-based collections), 36:50-67 (Time Domain). A POSITA would have understood that this information

comprises "management information" in accordance with the '815 patent. The Horn-Baumgartner combination renders obvious video information. *Supra* [1b].

3. [6c] wherein the management information includes filename information and timing information for each of the third, fourth, and fifth video information such that when the third, fourth, and fifth video information is stored in the recording medium the filename information is updated according to a predetermined sequence.

171. The Horn-Baumgartner combination renders this limitation obvious. Horn and Baumgartner render obvious having management information that includes filename information and timing information for each of the third, fourth, and fifth information. *Supra* [6b]. Horn and Baumgartner render obvious that when the third, fourth, and fifth information is stored in the recording medium the filename information is updated according to a predetermined sequence. In my opinion, a plausible interpretation of the term "updated according to a predetermined sequence" for the purposes of this proceeding, at least, means that updating the sequence for renaming video information follows a predetermined pattern, ensuring filename consistency and organization. Horn discloses: "Link or link metadata: means metadata that is specifically defined, ***updated***, and accessed for the purpose of linking together and organizing reference objects logically in collections and other containers," 4:27-30, "Updates and changes to the reference objects also update the metadata in the catalog with the changes rippling throughout all the images in all collections instantly and simultaneously," 7:20-

8:39, "The inventive MFS-configured system automatically updates stored reference objects' metadata (names, sizes, and the like) and links (collection and container membership), classifying incoming and changed objects by their content data and metadata, thereby automatically updating and creating new links to the growing number of objects in the various collections," 7:52-58, "The system architecture and methodology in providing dynamic collection functionality (such as time-based collections: Today, Yesterday, Last Year, and so on), combined with ***real-time updating and referencing*** (Viewing by Reference), provides a unique and valuable mechanism for examining a user's changing information environment," 18:28-33, 16:64-17:3 (Viewing by Reference), "The updater is the process by which invalid object properties are computed and new values set for future retrieval," 27:33-28:19, and "if a file's modification date changes, its corresponding file object is updated with the current filename, modification date, size, and so on in order to mirror exactly the file's property values," 34:1-12. A POSITA would have understood that organizing objects locally would have included updating the filename information according to a predetermined sequence.

H. Claim 9.

1. [9pre] An information processing method implemented on an information processing apparatus, the information processing method comprising:

172. To the extent the preamble is limiting, Horn discloses it. *Supra* [1pre].

2. [9a] storing a plurality of video information including first video information received wirelessly by a network interface over a network from another information processing apparatus,

173. *See supra* [1b].

3. [9b] wherein at least some of the plurality of video information is associated with a user profile; and

174. *See supra* [1c].

4. [9c] displaying:

175. *See supra* [1d].

5. [9d] a first area including a first character associated with a first group of video information for a first classification and a second character associated with a second group of video information for a second classification different from the first classification,

176. *See supra* [1f].

6. [9e] the first group of video information being configured to allow a user to edit,

177. *See supra* [1g].

7. [9f] wherein the first group of video information and the second group of video information are part of the plurality of stored video information, and

178. *See supra* [1h].

8. [9g] a second area displaying thumbnails corresponding to at least a portion of the plurality of stored video information,

179. *See supra* [1i].

9. [9h] wherein user selection of the first character enables the display of a first group of thumbnails corresponding to the first group of video information in the second area, and

180. *See supra* [1j].

10. [9i] wherein user selection of the second character enables the display of a second group of thumbnails corresponding to the second group of video information in the second area;

181. *See supra* [1k].

11. [9j] upon one video information stored on the recording medium included in both the first group of video information and the second group of video information being deleted from the first group of video information, the one video information continues to be included in the second group of video information,

182. *See supra* [1l].

12. [9k] and displaying a thumbnail corresponding to the one video information as one of the second group of thumbnails when the second character is selected;

183. *See supra* [1m].

13. [9l] wherein the processor generating a group of video information based on user preferences determined by the user selections of the video information, and

184. *See supra* claim 2.

14. [9m] upon user selection of the group, displaying thumbnails that correspond to the video information and no

other thumbnails associated with video information of other users.

185. *See supra* claim 2

I. Claim 10. The information processing method of claim 9, further comprising: wirelessly receiving the first video information from the other information processing apparatus via an antenna of the information processing apparatus.

186. *See supra* claims 9, 3.

J. Claim 11.

1. [11a] The information processing method of claim 9, wherein the plurality of stored video information includes third video information recorded by the information processing apparatus, fourth video information, and fifth video information,

187. *See supra* claim 9, [4a].

2. [11b] wherein the information processing apparatus displays a user interface having thumbnails corresponding to each of the third, fourth, and fifth video information.

188. *See supra* [4b].

K. Claim 12. The information processing method of claim 11, wherein the information processing apparatus displays the third, fourth, and fifth video information according to predetermined playback sequence.

189. *See supra* claims 11, 5.

L. Claim 13.

1. [13pre] The information processing method of claim 9,

190. *See supra* claim 9.

2. [13a] wherein the plurality of stored video information includes third video information, fourth video information, and fifth video information,

191. *See supra* [6a].

3. [13b] wherein the plurality of stored video information includes management information corresponding to the third, fourth, and fifth video information,

192. *See supra* [6b].

4. [13c] wherein the management information includes filename information and timing information for each of the third, fourth, and fifth video information such that when the third, fourth, and fifth video information is stored in the recording medium the filename information is updated according to a predetermined sequence.

193. *See supra* [6c].

VII. GROUND 2: HORN, BAUMGARTNER, AND WINTV RENDER OBVIOUS CLAIMS 7, 8, 14, AND 15

A. Motivation to Combine WinTV with the Horn-Baumgartner Combination

194. Baumgartner explicitly suggests including in the personal computer 98 of Fig. 5 a television tuner card for decoding analog and digital television channels. EX1016, ¶83. WinTV discloses a WinTV television tuner card and associated software configured for installation in a personal computer such as those disclosed in Horn and Baumgartner. *See* Section V.B; *see also* figure in EX1010 at 1-2:

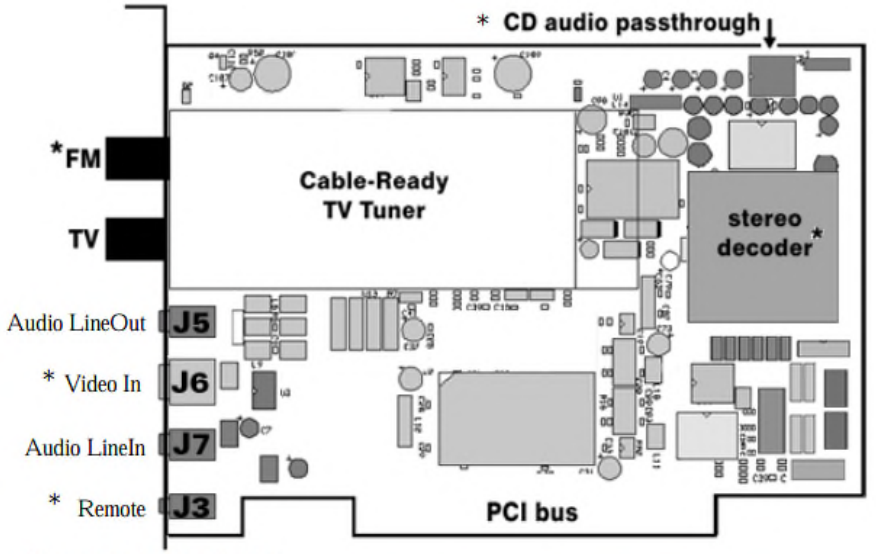

*Note: not available on all models.
Note: this outline may not reflect the current revision of your WinTV board. For the most up to date information, see the WinTV QuickInstall Guide provided with your WinTV board.

Accordingly, a POSITA would have found it obvious to include WinTV's television tuner card in a Horn-Baumgartner PC as taught by Baumgartner and WinTV to improve the Horn-Baumgartner device with the additional capability of capturing videos from television signals such as NTSC television signals. A POSITA would have had a reasonable expectation of success in making this combination because such combinations were known in the art and involved no more than ordinary skill.

B. Claim 7

1. [7a] The information processing apparatus of claim 1, further comprising: an analog to digital converter for

converting analog audio information being recorded into digital audio information;

195. The Horn-Baumgartner-WinTV combination renders this limitation obvious. Horn-Baumgartner renders obvious the apparatus of claim 1. *Supra* claim 1.

196. WinTV discloses that "WinTV-Capture creates a file type called *AVI (Audio/Video Interleaved)* on your hard disk. This file contains *digitized* video and, optionally, *audio*." EX1010, 4-1. WinTV discloses that it demodulates a received analog television signal and outputs the analog audio portion of that demodulated television signal to a sound card installed in the PC. EX1010, 7-1; *see also* 1-13, 1-14 (discussing connection of Audio LineOut audio output of WinTV card to sound card). A sound card includes an analog-to-digital converter for converting analog audio to digital form. EX1019, 3:20-43. A POSITA would have understood from these descriptions that the demodulated TV analog audio from the WinTV card is sent to the sound card, digitized, and then stored in the AVI file together with digitized video from the WinTV card.

2. [7b] a compressor for compressing the plurality of video information including digital video information and the digital audio information;

197. The Horn-Baumgartner-WinTV combination renders this limitation obvious. WinTV discloses compressing the AVI file after it has been created, including the use of Indeo, Cinepak, and MPEG compression. EX1010, 4-1. A

POSITA would have understood from this description in WinTV that the AVI file is compressed by the processor in the CPU configured with appropriate compression software, and MPEG (*e.g.*, MPEG-4) compression included both video and audio compression for a combined digital compressed file. EX1020, 1:52-59; 2:58-64 and Fig. 2.

3. [7c] a decoder for decoding, during playback, the compressed digital video information and the compressed digital audio information included in the plurality of stored video information and selected for reproduction by the user; and

198. The Horn-Baumgartner-WinTV combination renders this limitation obvious. For example, WinTV discloses allowing the user to "capture and playback video clips." EX1010, pp. 4-1-4-2. The captured information may include audio as well as the video. EX1010, p. 4-5. As noted above, WinTV discloses converting analog video and audio information into digital form and compressing the digitized analog and video information for storage. *Supra* [7a], [7b]. A POSITA would have understood that the playback of the stored information would have involved decoding the compressed and digitized analog and video information for the information to be played back as this was standard at the time.

4. [7d] a digital to analog converter for converting at least the decoded digital audio information into analog audio information during playback.

199. The Horn-Baumgartner-WinTV combination renders this limitation obvious. WinTV discloses allowing the user to "capture and playback video clips." EX1010, pp. 4-1-4-2. The captured information may include audio as well as the video. EX1010, p. 4-5. As noted above, WinTV discloses converting analog video and audio information into digital form and compressing the digitized analog and video information for storage. *Supra* [7a], [7b]. A POSITA would have understood that the playback of the stored audio information would have involved decoding it and converting it to be played back through a sound card, speaker or other device connected to the computer. A sound card includes a digital-to-analog converter for converting digitized audio to analog audio suitable for input to a speaker. EX1019, 3:34-43.

C. Claim 8.

1. [8a] The information processing apparatus of claim 1, further comprising: an on screen display generator generating on screen display information,

200. The Horn-Baumgartner-WinTV combination renders this limitation obvious. Horn and Baumgartner render obvious the apparatus of claim 1. *Supra* claim 1.

201. WinTV discloses an on screen display generator generating on screen display information such as the title "Capture 1" for a captured video:

EX1010, p. 4-2.

2. [8b] wherein the plurality of stored video information includes third video information such that, upon selection for playback, the third video information is outputted with the on screen display information for display of the third video information and the on screen display information.

202. The Horn-Baumgartner-WinTV combination renders this limitation obvious. Horn and WinTV render obvious that the plurality of stored video information includes third video information such that, upon selection for playback, the third video information is outputted with the on screen display

information for display of the third video information and the on screen display information. *Supra* [4a], [8a]; *see also* EX1010, p. 4-2 ("Capture 1"):

D. Claim 14

1. [14a] The information processing method of claim 9, further comprising: converting, by an analog to digital converter of the information processing apparatus, analog audio information being recorded into digital audio information;

203. *See supra* claim 9, [7a].

2. [14b] compressing, by a compressor of the information processing apparatus, the plurality of video information

including digital video information and the digital audio information;

204. *See supra* [7b].

3. [14c] decoding, during playback and by a decoder of the information processing apparatus, the compressed digital video information and the compressed digital audio information included in the plurality of stored video information and selected for reproduction by the user; and

205. *See supra* [7c].

4. [14d] converting, by a digital to analog converter of the information processing apparatus, at least the decoded digital audio information into analog audio information during playback.

206. *See supra* [7d].

E. Claim 15

1. [15a] The information processing method of claim 9, further comprising: generating, by the information processing apparatus, on screen display information,

207. *See supra* claim 9, [8a].

2. [15b] wherein the plurality of stored video information includes third video information such that, upon selection for playback, the third video information is outputted with the on screen display information for display of the third video information and the on screen display information.

208. *See supra* [8b].

VIII. GROUND 3: HORN, BAUMGARTNER, WINTV, AND CHAO RENDER OBVIOUS CLAIMS 1-15

A. Motivation to Combine Chao with Horn, Baumgartner and WinTV

209. As discussed in Section IV.D.3.a, "video information" may be construed as referring to a collection of videos such as a playlist or album, and thus a "group of video information" information would refer to a group of such collections/playlists/albums. At the time of the '815 patent, it would have been obvious to a POSITA to further modify the combinations of Horn-Baumgartner in Ground 1 and Horn-Baumgartner-WinTV in Ground 2 by adding thumbnails for albums/folders of content data as taught by Chao, and a POSITA would have been motivated to do so for the reasons discussed below. These combinations render claims 1-15 of the '815 patent obvious for the following reasons.

210. The example of the Workspace view in Fig. 26 shows the content pane 2603 including only single .jpg image objects corresponding to a collection selected in the collections pane 2602:

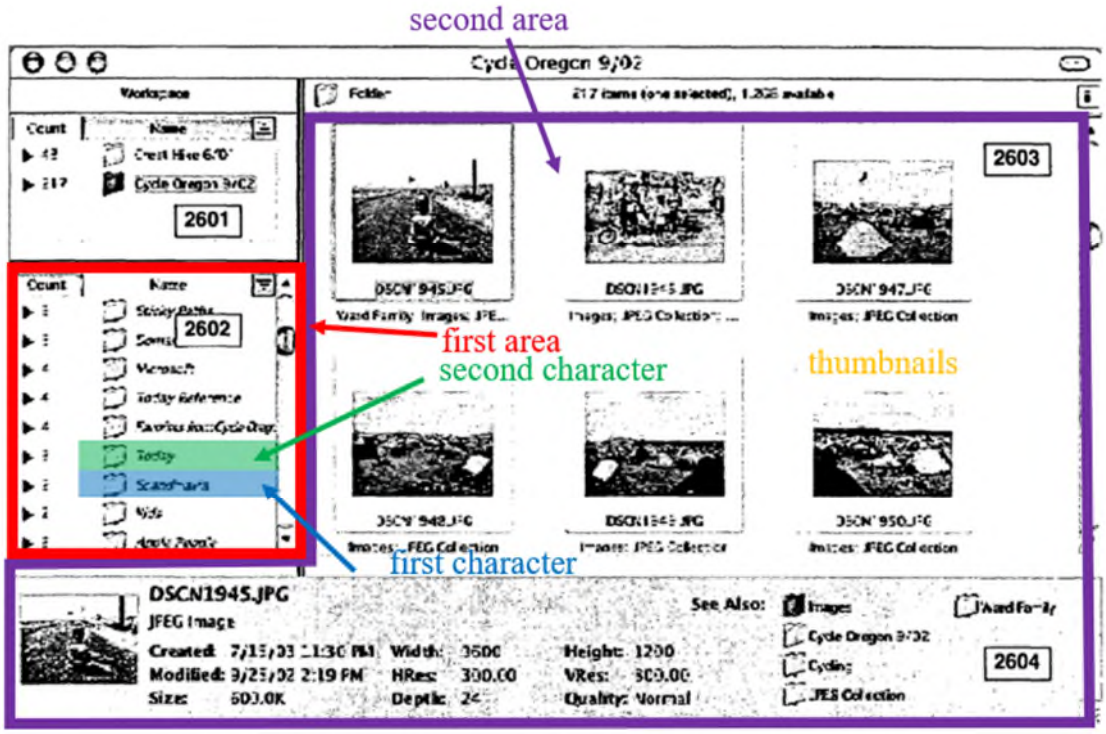

211. However, Horn discloses that collections can include more than just individual image objects: collections can also include containers of groups of objects, including folders. Horn discloses that a collection is a grouping of objects that is a special type of container, and that containers may contain other containers. EX1005, 4:1-9. A folder is one type of container that may appear in a collection. This can be seen in the excerpt of Fig. 12a below, which illustrates a "Sticky Paths" representation of a collection. This image shows that a "Family" collection includes folders such as "Mia and Cam Flying 5/03" and "Mia, Cam and Chloe

5/03:

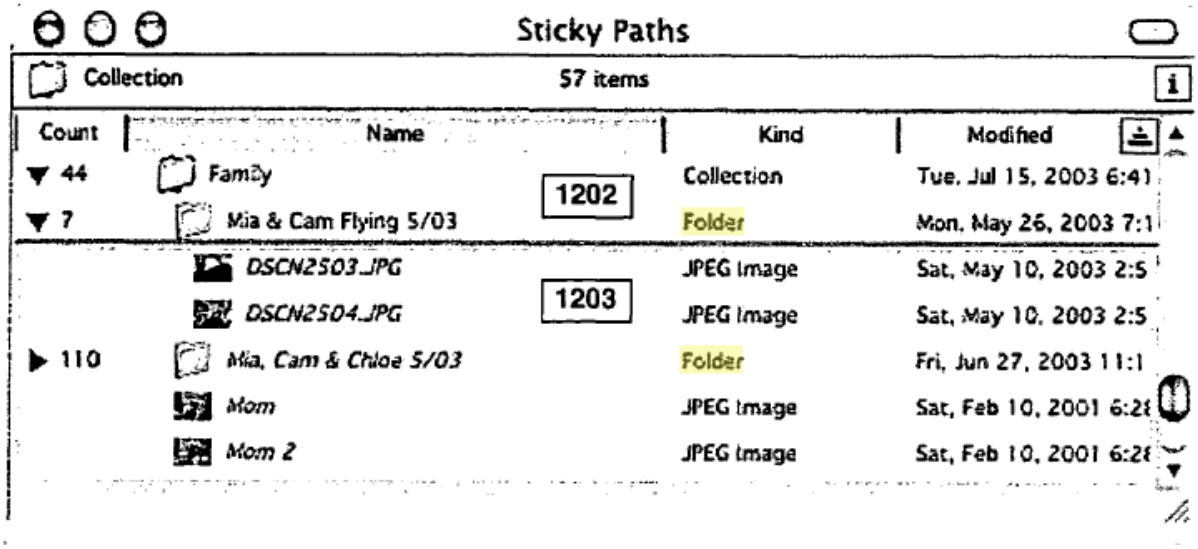

EX1005, Figs. 12a-b; *see also* excerpt of Fig. 19 below, showing a Scandinavia collection including a "Norway 7/02" folder in addition to single image .jpg objects.

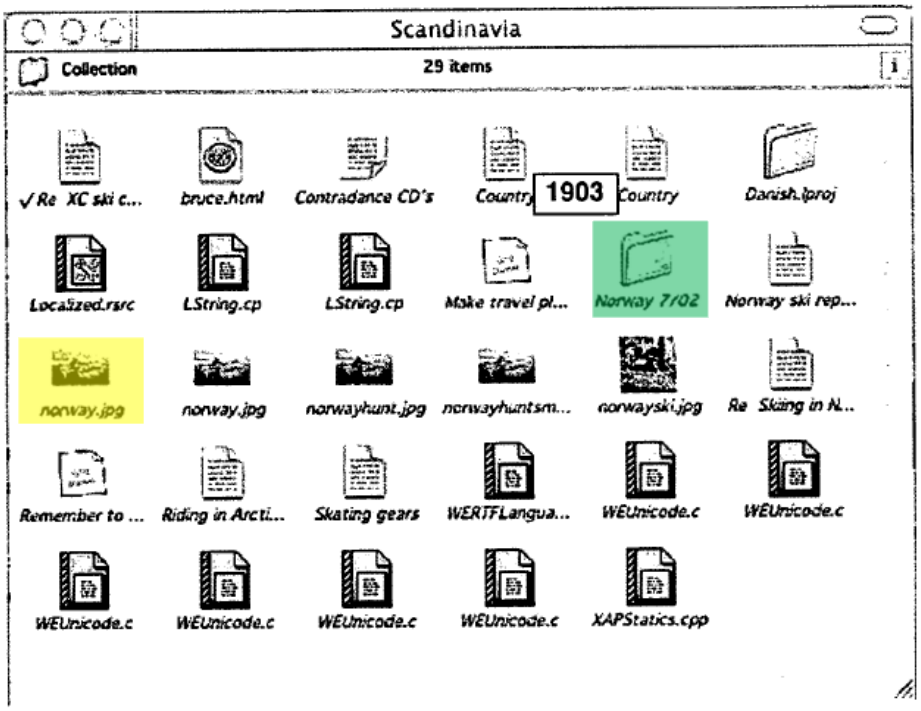

212. Accordingly, a POSITA would have understood, or at least found obvious, that such folders would be included in the content pane 2603 of Fig. 26 when a collection including those folders is selected in the collections pane 2602.

213. A POSITA would have further found it obvious to modify Horn's system to display a thumbnail, such as a thumbnail for an image in the folder as taught by Chao, rather than a folder icon, in the content pane 2603 of the Workspace view of Fig. 26. Chao discloses the use of thumbnails to represent both individual objects as shown in the display area 811 below, and collections as shown in the display area 810 highlighted in yellow below:

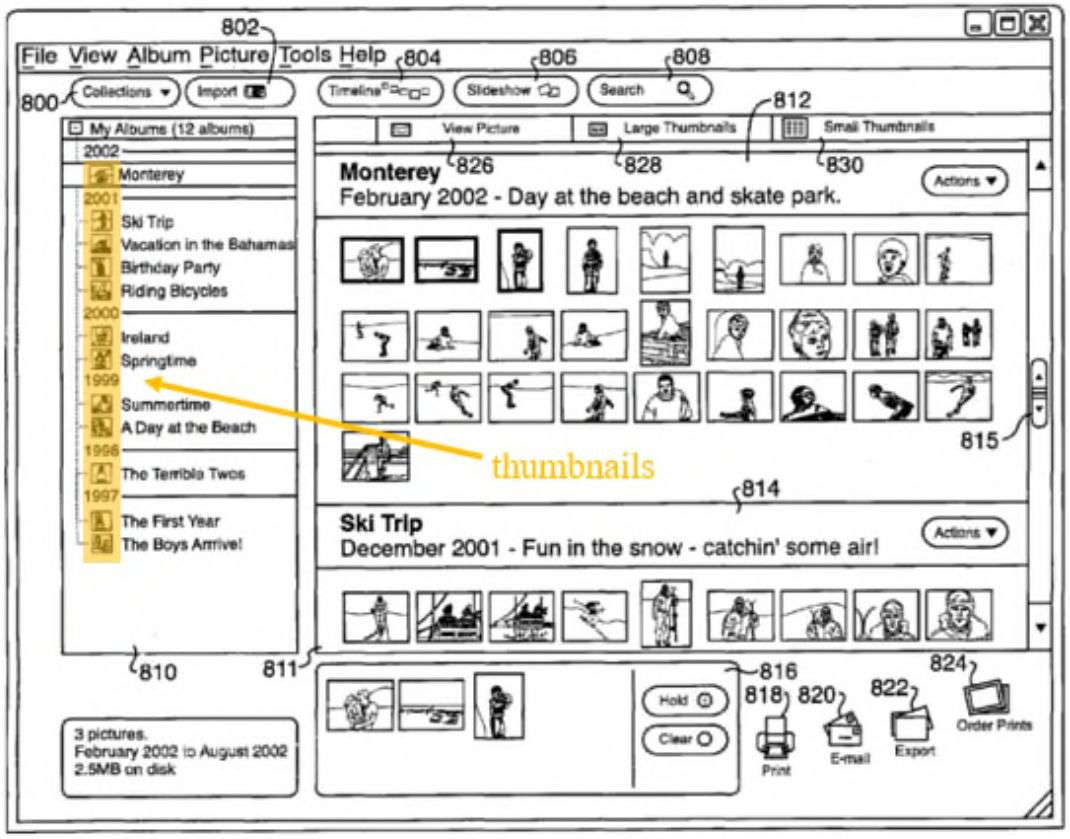

FIG. 8

214. A POSITA would have been motivated to use thumbnails to represent folders in Horn's content data organization system because Horn already teaches the use of thumbnails for individual objects. EX1005, FIG. 26, 19:25-57. A POSITA would have recognized the benefit of using thumbnails to represent folders of objects as disclosed by Chao to provide easy visual navigation for users through their collections, folders, and files, as is taught by Horn. EX1005, 30:44-31:16, FIG. 26, 19:25-57. As disclosed in the references, thumbnails are commonly used in graphical user interfaces, such as file explorers and media management applications that host an extensive library of images or videos, to improve the user

experience by providing a faster and more efficient way to browse through media content. A POSITA would have understood a thumbnail could simply represent multiple objects rather than a single object—including multiple video objects.

215. Combining Chao with Horn-Baumgartner or Horn-Baumgartner-WinTV would simply involve applying a known technique (*i.e.*, providing thumbnails for folders of video objects) to a known device ready for improvement (the Horn-Baumgartner or Horn-Baumgartner-WinTV system for content management) to yield predictable results (providing thumbnails for folders of video objects, as was obvious in computing at the time).

216. A POSITA would have had a reasonable expectation of success in the combination because Horn already discloses thumbnails for individual objects and characters that represent collections/folders. A POSITA thus would have had a reasonable expectation that the modification of Horn-Baumgartner and Horn-Baumgartner-WinTV combinations with Chao would be successful. A POSITA would have found that the teachings of Horn, Baumgartner, WinTV, and Chao could have been predictably combined at least because of the predictability of the art of computer systems and the known interchangeability of the various elements of content management systems and user interfaces for the same. Therefore, in my opinion a POSITA would have considered it obvious to include the album/folders

thumbnails of Chao in Horn-Baumgartner and Horn-Baumgartner-WinTV for the benefits described above.

B. Claims 1-15

217. With the substitution of Chao's thumbnails instead of Horn's folder icons to represent folders in Horn's Workspace view as exemplified in Fig. 26, the Horn-Baumgartner-Chao combination renders obvious claims 1-6 and 9-13 for the same reasons identified for Ground 1 above, and the Horn-Baumgartner-WinTV-Chao combination renders claims 8, 9, 14 and 15 obvious for the same reasons identified in Ground 2 above.

IX. GROUND 4: KAPLAN AND BRYANT RENDER OBVIOUS CLAIMS 1-6 AND 9-13

A. Motivation to Combine Kaplan and Bryant

218. A POSITA would have been motivated to combine Kaplan and Bryant for at least two reasons.

219. First, a POSITA would have been motivated to supplement the teachings of Kaplan by using Bryant's teachings regarding image capture and obtaining video information with a user's camera. For instance, Kaplan discloses a system that:

> provides users with a simple and intuitive method and computer program for reviewing their multimedia content, which can include digital video, digital audio and text, still images, animation, and MIDI. The various types of multimedia content are typically in the

> form of digital computer file formats. Today there are dozens of multimedia file formats such as JPEG, GIF, TIFF, MOV, WAV, AVI, and MP3.

EX1014, ¶38. The camera and upload system of Bryant similarly provides "digital still images and digital motion images." EX1015, ¶¶29, 36. A benefit of using a digital camera, as disclosed in Bryant, is that it can include user controls for categorizing the images, including metadata that enables subsequent organization. *See, e.g.*, EX1015, ¶¶3-5, 29. Moreover, Bryant explains that by using multimedia according to its systems and methods, a particular user's "affective information" can be captured, which can be stored with the still or video images. EX1015, ¶¶29-34. A POSITA would have recognized that inclusion of the richer metadata in Bryant would have improved the Kaplan system, allowing for more effective (*e.g.*, more detailed or more personalized) organization and retrieval of multimedia information. *See, e.g.*, EX1015, ¶¶29 ("can later be used in retrieving"), 30 ("One very important type of affective information is the level of importance a user associates with an image, such as whether the image is a 'favorite.'"), 32-33 ("Different users..."); *see also* EX1014, ¶¶42-49, FIG. 7. In this respect, the teachings of Bryant itself motivate the combination.

220. <u>Second</u>, a POSITA would have been motivated to use Bryant's robust disclosure of user-customizable metadata, such as "groups" (*e.g.*, Animals, Sports) and corresponding areas of the interface menu. *See* discussion regarding Claim 1 in

Section IX.B; *see also* EX1015, FIGS. 8, 9A-9C. For instance, a POSITA would have used the display arrangement and controls set forth in Bryant's FIGS. 9A-9C, which would allow for more effective (*e.g.*, more detailed or more personalized) organization and retrieval of multimedia information. *See, e.g.*, EX1015, ¶100 ("In block 146 of FIG. 3, the user optionally resets images that are no longer considered favorites. This is accomplished using the favorites level selection area 860. The user first selects one of the thumbnail images (*e.g.*, thumbnail image 822B), and the favorites level selection area 860 then displays the current favorites level. If the user has not previously modified the level, the images are either 'Normal' or 'Favorite'. Using the selector 862, the user can change the level of the selected image to be an 'Extra Favorite', a 'Favorite', a 'Normal' image, or a 'Dislike' image."). For instance, the metadata of Bryant would be useful with respect to the search functions in Kaplan. *See* EX1014, ¶¶65-66. With its emphasis on user-customization and control, Bryant itself motivates the combination.

221. A POSITA would have recognized that this combination was one of familiar elements, performing their typical functions, and according to known methods. As such, it would have been straightforward and yielded predictable results. Both Kaplan and Bryant use conventional components and programming. *See* EX1014, ¶¶37-38 ("The present invention could be written in a number of computer languages including, but not limited to, C, C++, Basic, Visual Basic,

Fortran, Cobol, Smalltalk, Java, and other conventional programming languages. It is to be understood that various computers and/or processors may be used to carry out the present invention without being limited to those described herein. The present invention can be implemented on an IBM or IBM-compatible personal computer, preferably utilizing a DOS, Windows 3.1, Windows 95, Windows 98, Windows NT, Unix, Linux or OS/2 operating system....”); 40 (“common features of the Windows operating system”), FIG. 3 (“Operating System Standard Functions”); EX1015, ¶¶37-40 (“The home computer 10 includes a CPU motherboard 12, having for example, an Intel Pentium IV processor as well as RAM memory (not shown). The CPU motherboard 12 executes software stored on a hard drive 20, for example, the well-known Windows XP operating system software and the Internet Explorer web browser software, both provided by Microsoft Corp. of Redmond, Wash. The hard drive 20 is also used to store application software that can be provided along with the digital camera 300 using any suitable software distribution media or method, such as a CD-ROM, floppy disc, or Internet download, as is well-known to those skilled in the art.”); FIG. 1 (“Home Computer” with a camera and dock). Given that Kaplan already included metadata, such as Favorites, adding additional metadata fields such as those taught by Bryant would have been a straight forward application of known programming techniques. A POSITA would have known how to modify any data structures and

user interfaces to include additional metadata because modifying data structures and user interfaces was well within their skill, and they had already created those data structures and user interfaces to create the system of Kaplan in the first place.

222. Thus, in my opinion adding the metadata of Bryant to Kaplan would have been no more than the use of a known technique to improve similar a device in the same way.

B. Claim 1

1. [1pre] An information processing apparatus comprising:

223. To the extent the preamble is limiting, Kaplan discloses an information processing apparatus. For example, Kaplan discloses a "multimedia management system for storing, manipulating, and displaying multimedia content" that "comprises a user interface, a plurality of predefined functions, a multimedia acquisition interface, and system controls." EX1014, ¶4. Kaplan's system is implemented on a general-purpose computer such as a personal computer including software to implement the functionality disclosed in Kaplan. EX1014, ¶¶2-4, 34-37. Bryant similarly discloses a "home computer" 10, which a POSITA would recognize as a personal computer. EX1015, ¶37 and Fig. 1:

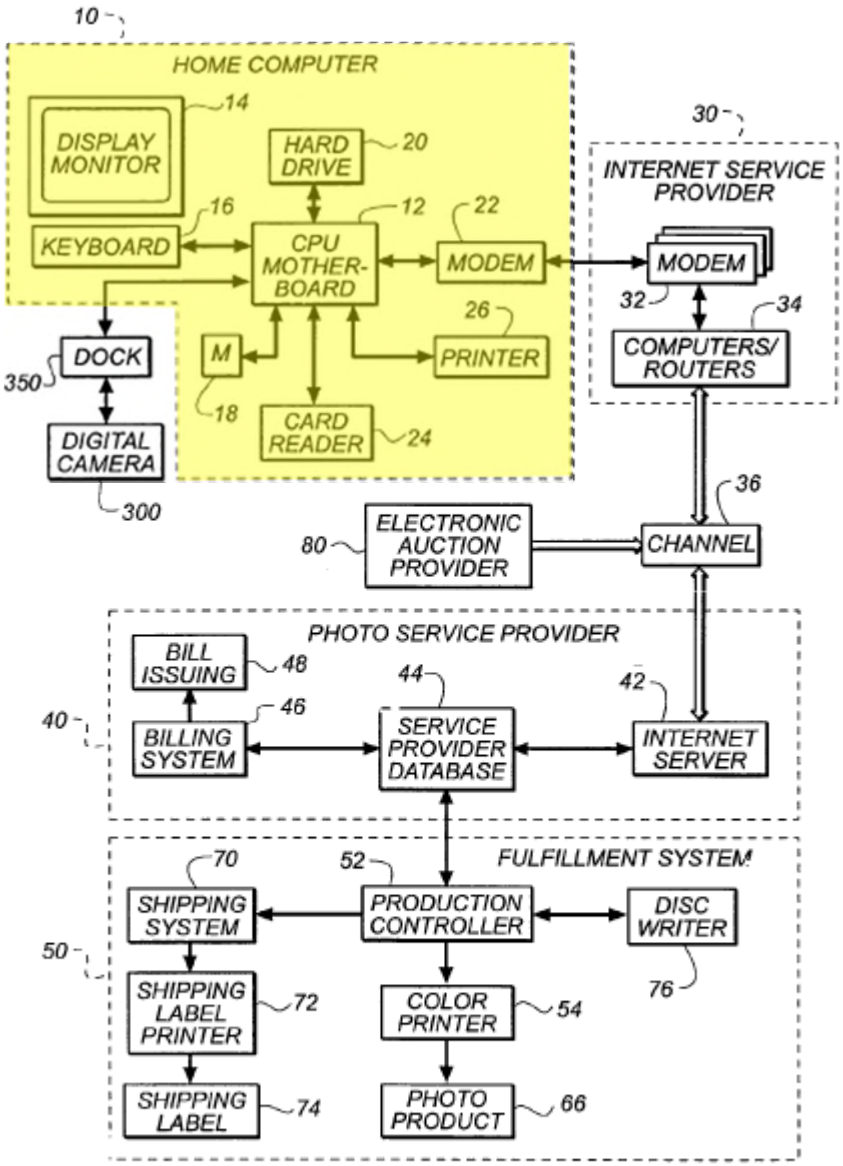

FIG. 1

2. [1a] a network interface;

224. This limitation is obvious over Bryant. Bryant discloses a network interface in the form of a dial-up modem 22 in the home computer 10 that is suitable for connection to the Internet. EX1015, ¶38 and Fig 1 (excerpted below):

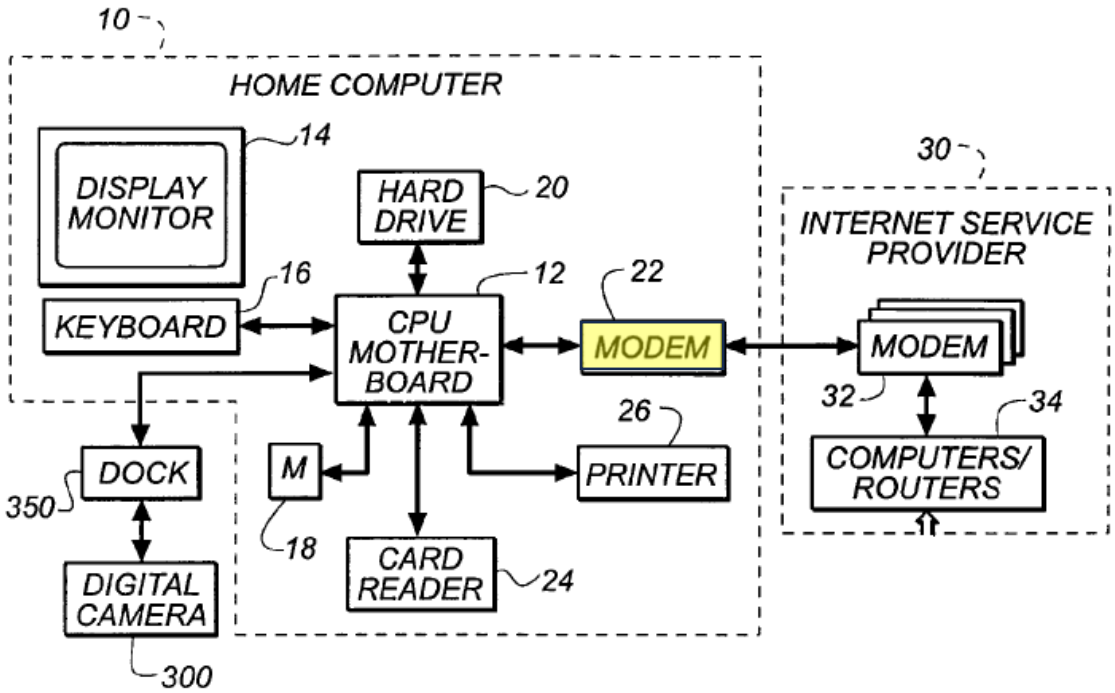

Bryant also discloses, in connection with a digital camera 300, a wireless modem such as a cellular modem or an "802.11 type" modem. EX1015, ¶140. It would have been obvious to a POSITA to modify Bryant's home computer 10 by incorporating such a wireless modem in place of the modem 22 for connection to the Internet service provider 30. Such a wireless connection of a computer to the Internet is disclosed in Baumgartner. EX1016, ¶54 and Fig. 1. A POSITA would have been motivated to use a wireless modem to implement a wireless connection to the Internet, such as using a cellular modem or an 802.11 modem as taught by Bryant to allow the Bryant's home computer 10 to be placed in a location in the home where a wired connection was unavailable or undesirable, and a POSITA would have understood that the 802.11 modem could connect to a wireless router

such as that used in an in-home LAN for the connection to the Internet. A POSITA would have had a reasonable expectation of success in making this modification as the use of wireless modems was nothing more than the use of a known product for its intended purpose and involved minimal skill.

3. [1b] a recording medium on which is stored a plurality of video information including first video information received wirelessly by the network interface over a network from another information processing apparatus,

225. The Kaplan-Bryant combination renders this limitation obvious. Kaplan's computer includes a computer-readable storage medium that can take the form of "hard disks, flash memory cards, CD-ROMs, optical storage devices, or magnetic storage devices." EX1014, ¶¶34, 37-38, 68-69. Kaplan further discloses storing multimedia files on the data storage system. EX1014, ¶¶38, 44 ("multimedia content, whether on the PC . . ."), claim 7. Multimedia content includes digital video and audio. Ex1016, ¶38 and Abstract. Bryant's computer also stores video information including "motion video images" on a local recording medium, *i.e.*, the hard drive 20. EX1015, ¶¶29 ("grouping and classifying digital still images and digital motion images"), 36 ("still and motion video images"), 37-38, 80-81, Figs. 1, 3. Kaplan further discloses receiving the video information via the Internet, *e.g.*, EX1014, ¶¶3, 4, 71, as does Bryant, *e.g.*, EX1015, ¶149. Finally, receiving this information wireless via a wireless modem at the Kaplan-Bryant PC would have been obvious to a POSITA for the reasons discussed above in [1a].

4. [1c] wherein at least some of the plurality of video information is associated with a user profile;

226. Bryant discloses this limitation. As discussed above, Bryant discloses associating "affective information" with digital motion images, which is "information that relates to the feelings or emotions of a person toward images." EX1015, ¶30. Bryant further discloses:

> Different users can have different emotional reactions to the same image. Therefore, to be most useful, affective information relating to images should be associated with a particular user, if the images are to be shared with various users. In some embodiments, this is accomplished by associating a user identifier with the affective information. The user identifier can be any type of information that helps enable a particular user to be identified. For example, the user identifier can be a personal identification code such as a globally unique ID (GUID), a user number, a Social Security number, a camera serial number, or the like. The user identifier can also be a complete legal name, a nick name, a computer user name, or the like.

EX1015, ¶32. To the extent that the '815 patent discloses this limitation, this passage in Bryant constitutes disclosure of at least some video information with a user profile.

5. [1d] a display; and

227. The Kaplan-Bryant combination discloses and renders obvious this limitation. The Kaplan computer system includes a display. *E.g.*, EX1014, ¶5. Similarly, Bryant's home computer includes a display monitor 14 as shown in the excerpt of Fig. 1 below. EX1015, ¶38 and Fig. 1.

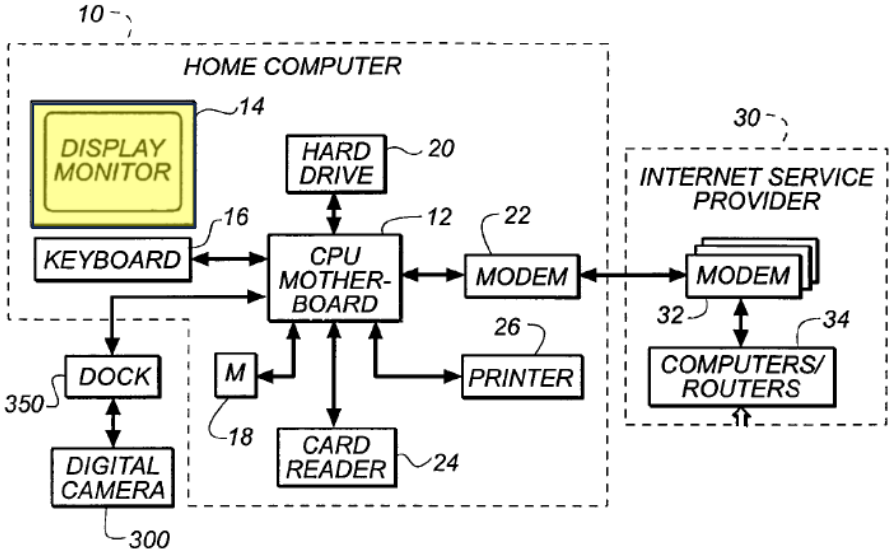

6. [1e] a processor for controlling the display to display:

228. The Kaplan-Bryant combination discloses and renders obvious this limitation. Bryant's home computer 10 includes a CPU motherboard 12 that includes, for example, a Pentium IV processor. EX1015, ¶37 and Fig. 1.

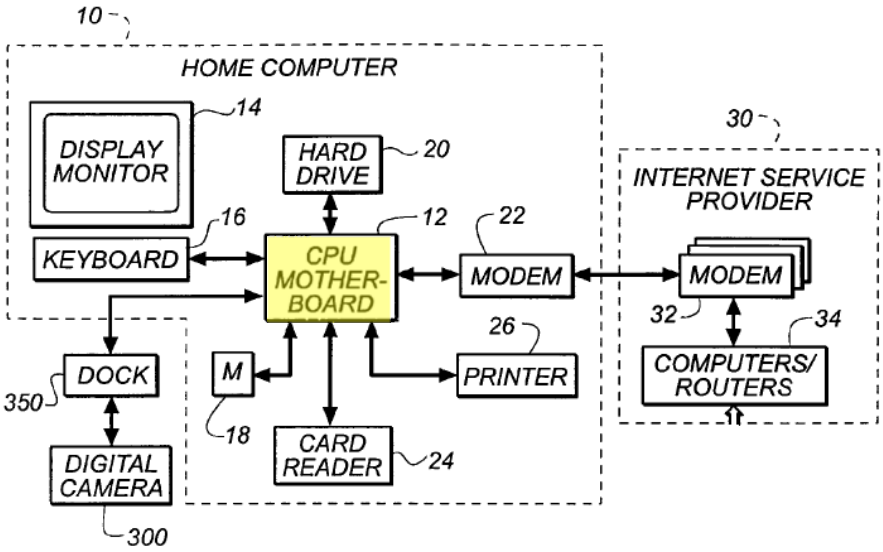

7. [1f] a first area including a first character associated with a first group of video information for a first classification and

a second character associated with a second group of video information for a second classification different from the first classification,

229. The Kaplan-Bryant combination renders this limitation obvious. As discussed in the 01432FWD, Kaplan discloses in Fig. 4 a menu display outlined in green below that includes a first area in blue. EX1014, Fig. 4; EX1009, 26.

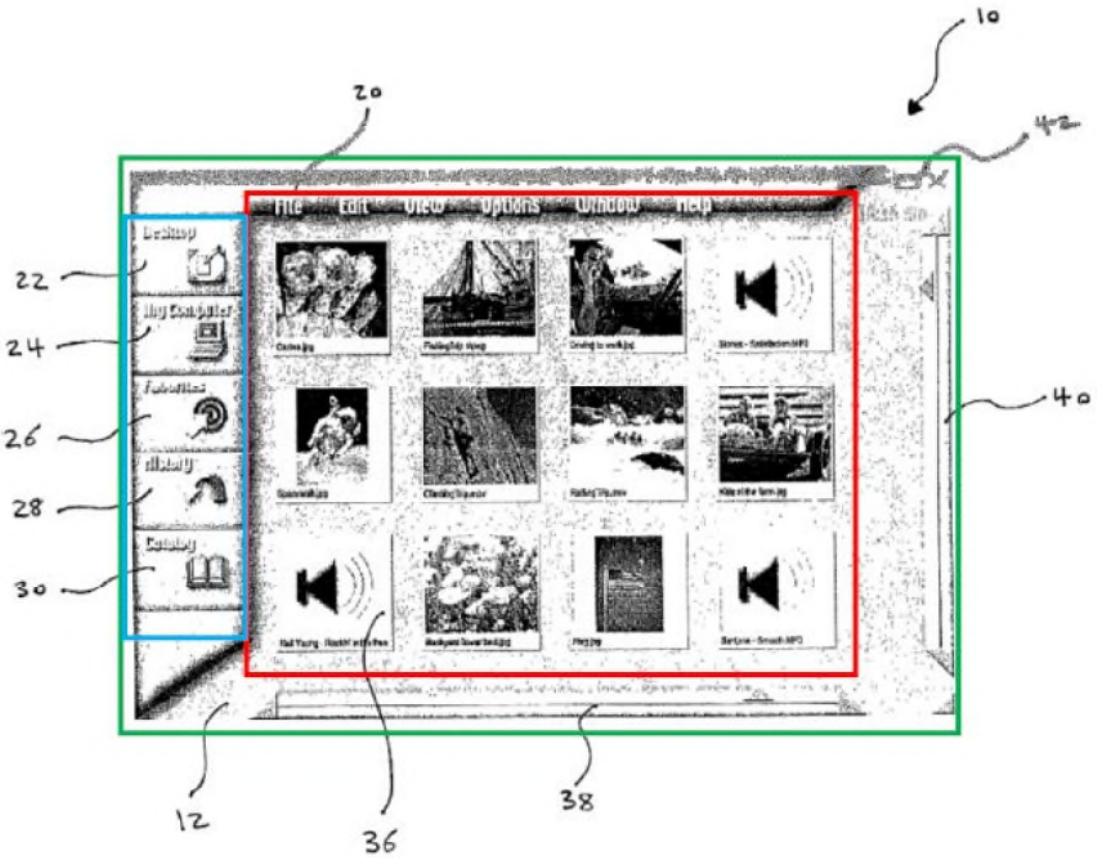

The first area includes a first character in the form of Favorites button 26 that includes the characters in the word "Favorites" and a bullseye icon. EX1014, ¶40; EX1009, 27-28. Favorites is a classification for a first group of objects such as videos that are represented by thumbnails because they were marked as a favorite of the user. EX1014, ¶42; EX1009, 27-28. The first area in blue in Fig. 4 also

includes a second character in the form of History button 28 that includes the characters in the word "History" and a different icon. EX1014, ¶40; EX1009, 27-28. History is a classification for a second group of objects such as videos (again represented by thumbnails) that are different from the first group, based on access of those objects by the user. EX1014, ¶¶42, 45; EX1009, 27-28. While photos are shown in the red area of Fig. 4, Kaplan discloses that they can be multimedia files including videos. EX1014, ¶44.

8. [1g] the first group of video information being configured to allow a user to edit,

230. The Kaplan-Bryant combination renders this limitation obvious. The buttons 26, 28 represent containers that are configured to allow a user to edit, such as by adding a video to a container using standard operating system window functions 20, such as FILE which can include marking a video as a favorite. EX1014, ¶44.

9. [1h] wherein the first group of video information and the second group of video information are part of the plurality of stored video information, and

231. The Kaplan-Bryant combination renders this limitation obvious. The objects in the Favorites and History groups are part of the information stored in Kaplan's system, such as the hard drive. EX1014, ¶44.

10. [1i] a second area displaying thumbnails corresponding to at least a portion of the plurality of stored video information,

232. The Kaplan-Bryant combination renders this limitation obvious. Kaplan discloses a second area shown in red in the annotated version of Fig. 4 below:

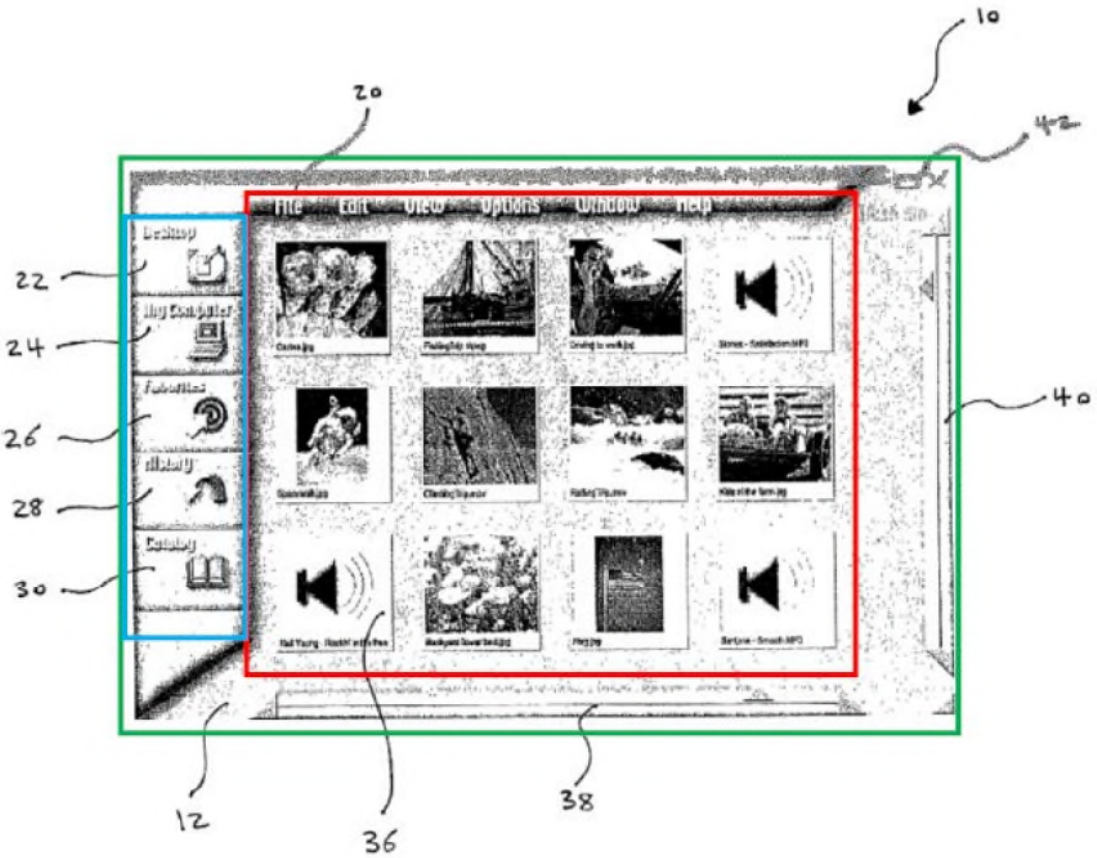

EX1014, ¶40 and Fig. 4; EX1009, 29. This second area displays thumbnails corresponding to a button selected in the first area in blue. *Id.*, *see also* EX1014, ¶42, Fig. 7.

11. [1j] wherein user selection of the first character enables the display of a first group of thumbnails corresponding to the first group of video information in the second area,

233. Bryant and Kaplan each disclose and/or render obvious this limitation, and their combination renders it obvious. Kaplan discloses that selection of the Favorites button results in the display of a first group of thumbnails 50-58 corresponding to the first group of "Favorites" objects as shown in Fig. 7. EX1014, ¶42, Fig. 7; EX1009, 30. These objects in Fig. 7 are folders, including a folder 56 that corresponds to videos in the form of movies. EX1014, ¶42. The choice of an icon such as the film icon on folder 56 or a thumbnail such as on folder 54 was a design choice and would have been obvious to a POSITA. As shown in Fig. 4, the objects could also be individual multimedia items including movies as discussed in limitation [1k]. *Id*.

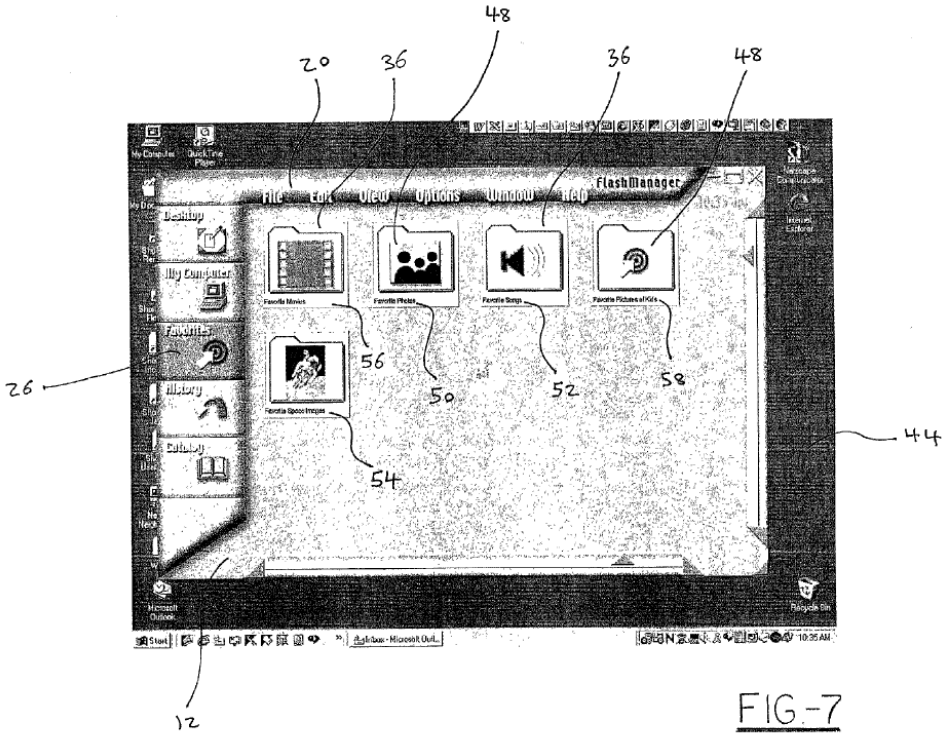

FIG.-7

12. [1k] wherein user selection of the second character enables the display of a second group of thumbnails corresponding to the second group of video information in the second area,

234. The Kaplan-Bryant combination renders this limitation obvious. Kaplan discloses that selection of the History button results in the display of a second group of objects 36-62 corresponding to the second group of "History" objects as shown in Fig. 8. EX1014, ¶45, Fig. 8; EX1009, 30. These objects in Fig. 8 are a mix of folders and individual items including a video 36 ("FishingTrip.mpeg") represented by a thumbnail. EX1014, ¶45. The choice of an icon such as the book icon on folder 48 or a thumbnail such as on folder 54 was a design choice and would have been obvious to a POSITA.

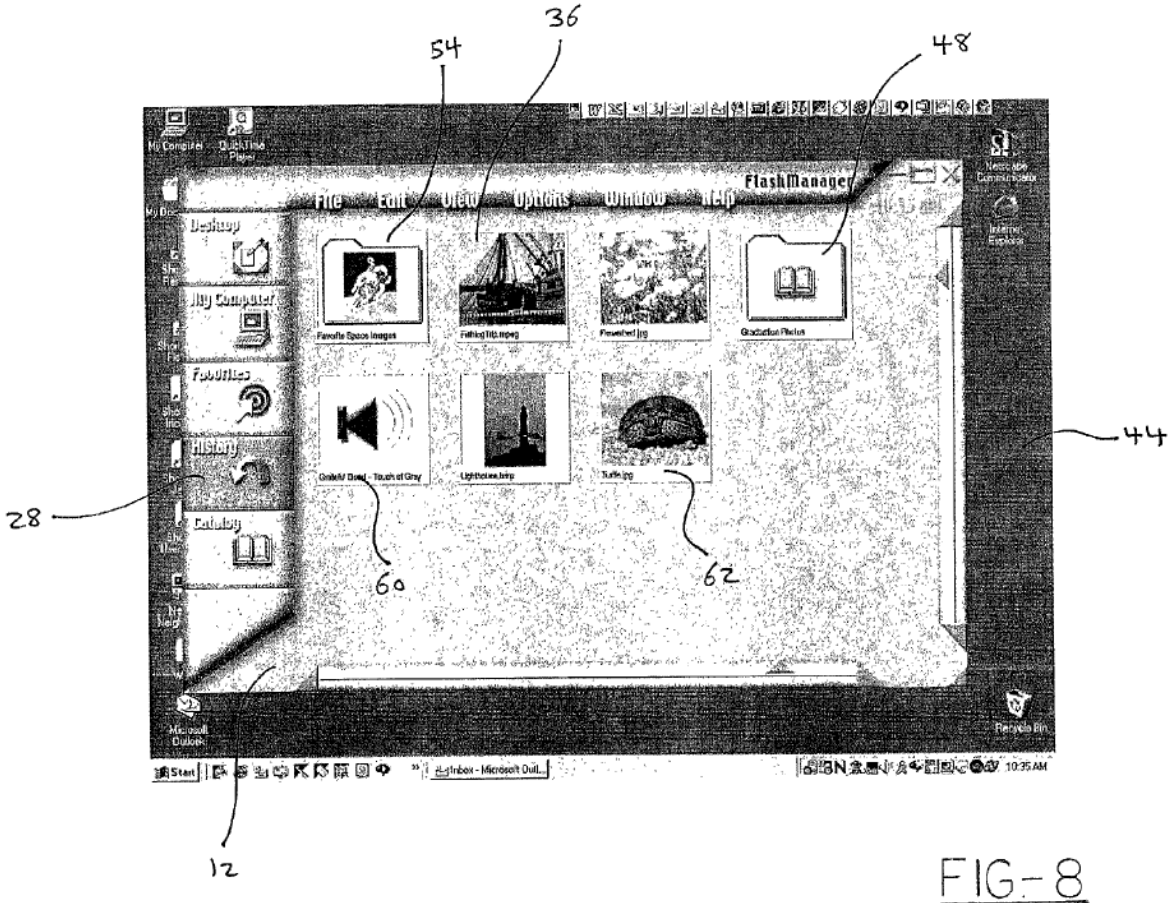

FIG-8

13. [1l] wherein, upon one video information stored on the recording medium included in both the first group of video information and the second group of video information being deleted from the first group of video information, the one video information continues to be included in the second group of video information and

235. The Kaplan-Bryant combination renders this limitation obvious as each of Kaplan and Bryant disclose or render obvious this limitation. EX1009, 31-36. As an initial matter, I note that the language of this limitation is nearly identical, and is substantively identical, to limitation 2.9 of the ’783 patent, which was held by the Board in the 01432FWD to be taught by Bryant alone and by the combination of Kaplan and Bryant. EX1009, 31-36.

236. In any event, Kaplan discloses the use of an indexed database file and pointers to a physical file location for an object such as a video. EX1014, ¶44. These pointers allow for a single object at a physical file location to be represented as thumbnails in multiple user interface groups such as "Favorites" and "History." *Id*. As explained in Kaplan:

> To facilitate the storage and subsequent retrieval of the multimedia data files, the multimedia management system user interface provides a plurality of predefined functions to ***uniquely index multimedia files, create an index database file, and create visual representations of the files for later retrieval.*** This function relates to a media library function of the media management system resident on a PC. ***The indexed file stores a pointer in the management system database to the physical file location, while providing a thumbnail image that can be used to represent the file in the management system user interface.*** This allows ***multiple pointers in the media management database, which relate to a single physical file stored on computer media.*** Thus, there is no need to store multiple physical files of the multimedia data, thereby saving storage space. Additionally, the media management system ***allows organization of the multimedia files into virtual albums of favorite multimedia files for easy access,*** while archiving the source material. The indexing system will automatically drop the indexing information into the library files for access.

EX1014, ¶44. This concept is also reflected in Kaplan's claim 20, which recites a "system for managing multimedia data files comprising a database of multimedia data files" and "a user interface having representations of the data files, wherein ***multiple representations of a data file can be presented in the user interface,*** with

any representation of a data file having a pointer to a single data file stored on computer readable memory." EX1014, claim 20.

237. A POSITA would have understood from these descriptions in Kaplan that with the use of multiple pointers to a single stored file: (1) video information recorded on a recording medium can be included in multiple groups (*e.g.*, first and second groups); and (2), if video information is deleted from a first group (*e.g.*, classified as "Favorites"), it will continue to be included in a second group (*e.g.*, classified as "Desktop," "My Computer," "History," and/or "Catalog"). A POSITA would also have understood that a user would have expected to be able to modify groups independently by deleting the video from one group (such as its inclusion in Favorite), without removing its membership in a second group (such as Catalog). Without such a feature (which was standard), the user would not be able to control their favorites without disrupting other groups of videos.

238. To the extent that this limitation is not disclosed or obvious over Kaplan, it is disclosed or at least obvious over Bryant. EX1009, 31-35. Similar to Kaplan, Bryant discloses multiple collections of image objects represented by thumbnails, including "All Images," "All Favorites," and "Group" as shown in Figs. 9A-9C:

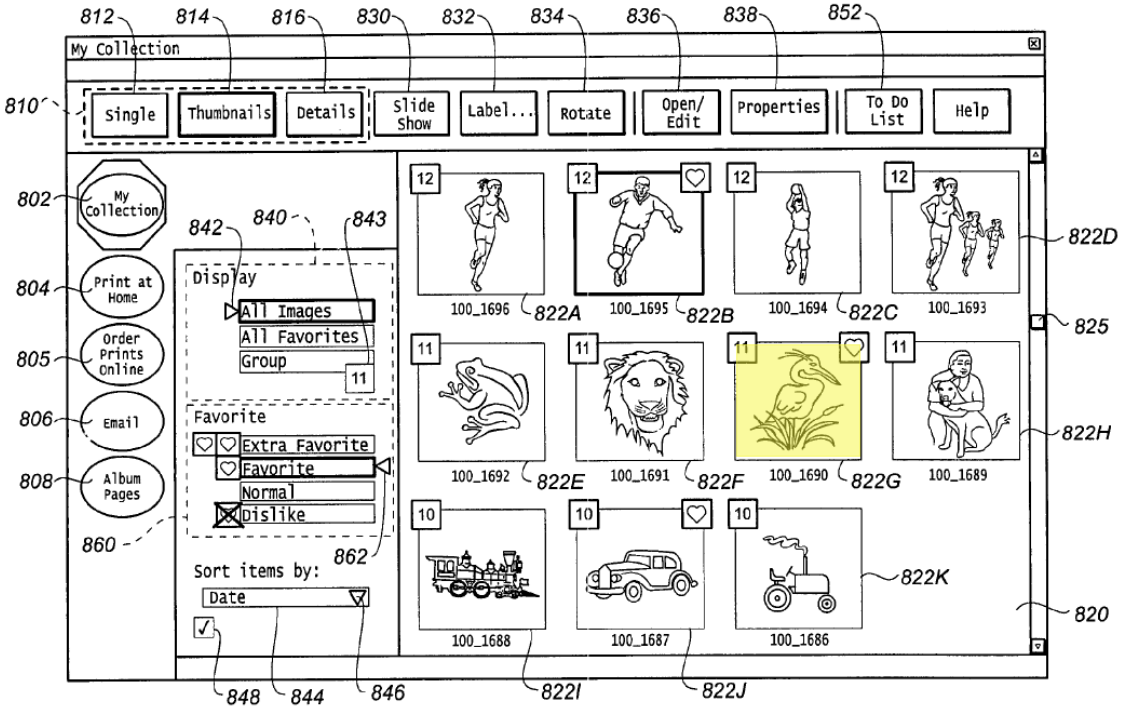
My Collection
Single
Thumbnails
Details
Slide Show
Label...
Rotate
Open/ Edit
Properties
To Do List
Help
My Collection
Print at Home
Order Prints Online
Email
Album Pages
Display
All Images
All Favorites
Group
Favorite
Extra Favorite
Favorite
Normal
Dislike
Sort items by:
Date
100_1696
100_1695
100_1694
100_1693
100_1692
100_1691
100_1690
100_1689
100_1688
100_1687
100_1686
812
814
816
830
832
834
836
838
852
810
802
804
805
806
808
860
842
840
843
862
822A
822B
822C
822D
822E
822F
822G
822H
822I
822J
822K
825
820
848
844
846

FIG. 9A

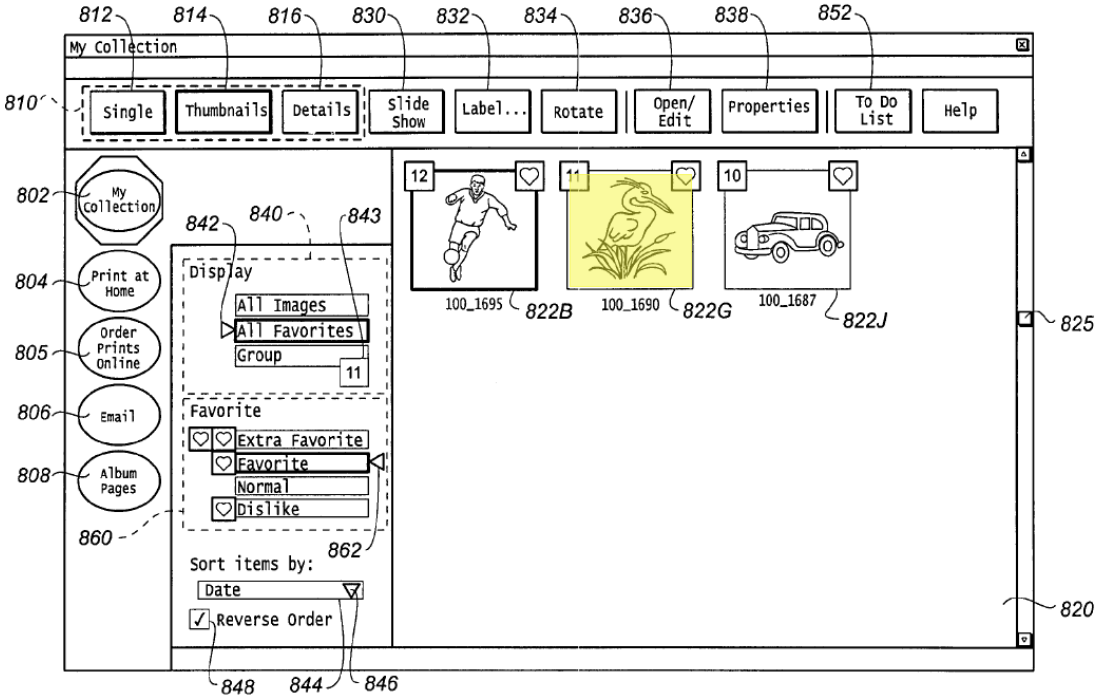
My Collection
Single
Thumbnails
Details
Slide Show
Label...
Rotate
Open/ Edit
Properties
To Do List
Help
My Collection
Print at Home
Order Prints Online
Email
Album Pages
Display
All Images
All Favorites
Group
Favorite
Extra Favorite
Favorite
Normal
Dislike
Sort items by:
Date
Reverse Order
100_1695
100_1690
100_1687
812
814
816
830
832
834
836
838
852
810
802
804
805
806
808
860
842
840
843
862
822B
822G
822J
825
820
848
844
846

FIG. 9B

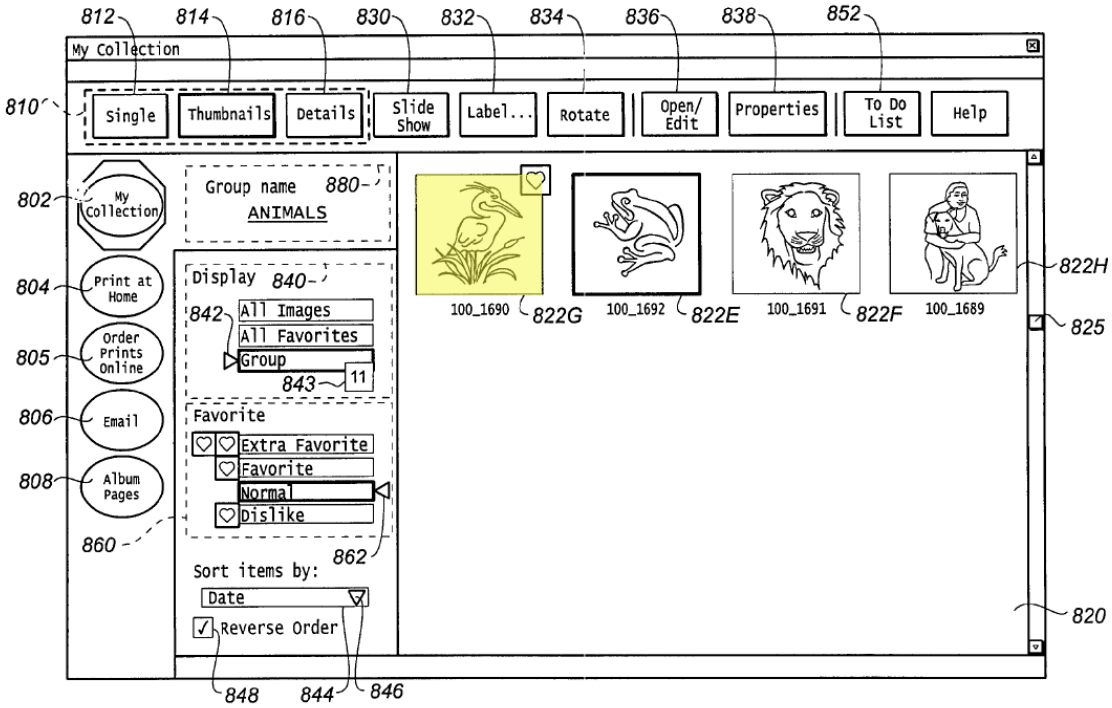

FIG. 9C

EX1015, ¶¶89-106.

239. Bryant also discloses a local database with a general assets table 600 and a table of fields that correspond to each media object as shown in Fig. 8 below and described in Bryant at ¶¶82-87:

600

OBJECT 1 (100_1686)	632
OBJECT 2 (100_1687)	634
OBJECT 3 (100_1688)	636
OBJECT 4 (100_1689)	638
OBJECT 5 (100_1690)	640
OBJECT 6 (100_1691)	642
OBJECT 7 (100_1692)	644
OBJECT 8 (100_1693)	646
OBJECT 9 (100_1694)	648
OBJECT 10 (100_1695)	650
OBJECT 11 (100_1696)	652

610

FIELD (612)	TYPE (614)	EXPOSE (616)	
CAPDATE	DATE/TIME	YES	660
IMAGE CAPTION	STRING	YES	662
CLGDATE	DATE/TIME	YES	664
FAVLEVEL	INTEGER	YES	666
FILESIZE	INTEGER	YES	668
FORMAT	STRING	YES	670
GROUP NUMBER	INTEGER	YES	672
GROUP NAME	STRING	YES	674
IMGHEIGHT	INTEGER	NO	676
IMGWIDTH	INTEGER	NO	678
IMAGEPATH	STRING	NO	680
MODDATE	DATE/TIME	YES	682
IMAGENAME	STRING	YES	684
PROTECTED	INTEGER	YES	686
THMHEIGHT	INTEGER	NO	688
THMWIDTH	INTEGER	NO	690
THMNAIL	DB BLOB	NO	692

FIG. 8

240. This structure allows a media file to be simultaneously classified in multiple groups. For example, the highlighted crane image 822G is included in each of the collections in Figs. 9A-9C. A POSITA would have recognized that Bryant discloses that if the crane media object were removed as a favorite by

changing the favorites level to "Normal" or "Dislike" as described in ¶105 of Bryant, the media object would continue to be included in the "All images" and "Group/" collections of video information. *See* EX1015, ¶101 ("In block 148, the favorites metadata is updated in the general assets table 600, and the icon displayed next to each thumbnail image is also updated, as was described earlier in relation to block 138."). This is because a POSITA would have understood that a user would have expected to be able to modify groups independently by removing the video from one group (such as its inclusion in All Favorites), without removing its membership in a second group (such as All Images or Group/11). If un-favoriting a video image somehow removed it from its Group (*e.g.*, sports) or from the full catalog of images (*e.g.*, "All Images"), that would have limited the utility of the system and caused confusion for the user. To the extent the foregoing is not implicit in Bryant, it is at least obvious over Bryant. *See also* EX1009, 31-35.

14. [1m] the processor controls the display to display a thumbnail corresponding to the one video information as one of the second group of thumbnails when the second character is selected.

241. The Kaplan-Bryant combination renders this limitation obvious. In view of Kaplan's and Bryant's disclosures discussed above for limitation [1k], a POSITA would have understood that selection of a second collection (*e.g.*, the History or All Images collection) would result in the display of thumbnails for all objects in the second collection even if one of those objects had been removed

from a favorites collection, and a POSITA would have found it obvious to provide this same functionality for video information such as movies as taught by both Kaplan and Bryant.

C. Claim 2. The information processing apparatus of claim 1, further comprising: wherein the processor generates a group of video information based on user preferences determined by the user selections of the video information, and wherein, upon user selection of the group, the processor controls the display to display thumbnails that correspond to the video information and no other thumbnails associated with video information of other users.

242. The Kaplan-Bryant combination renders this limitation obvious. The Kaplan-Bryant combination renders claim 1 obvious as discussed above. Kaplan discloses a "History" group, which is a second group of objects such as videos based on prior access of those objects by the user. When a user selects this group by pressing the History button 28, thumbnails for only those objects that have been previously accessed by the user are displayed as shown in Fig. 8 below. EX1014, ¶¶42, 45; EX1009, 27-28.

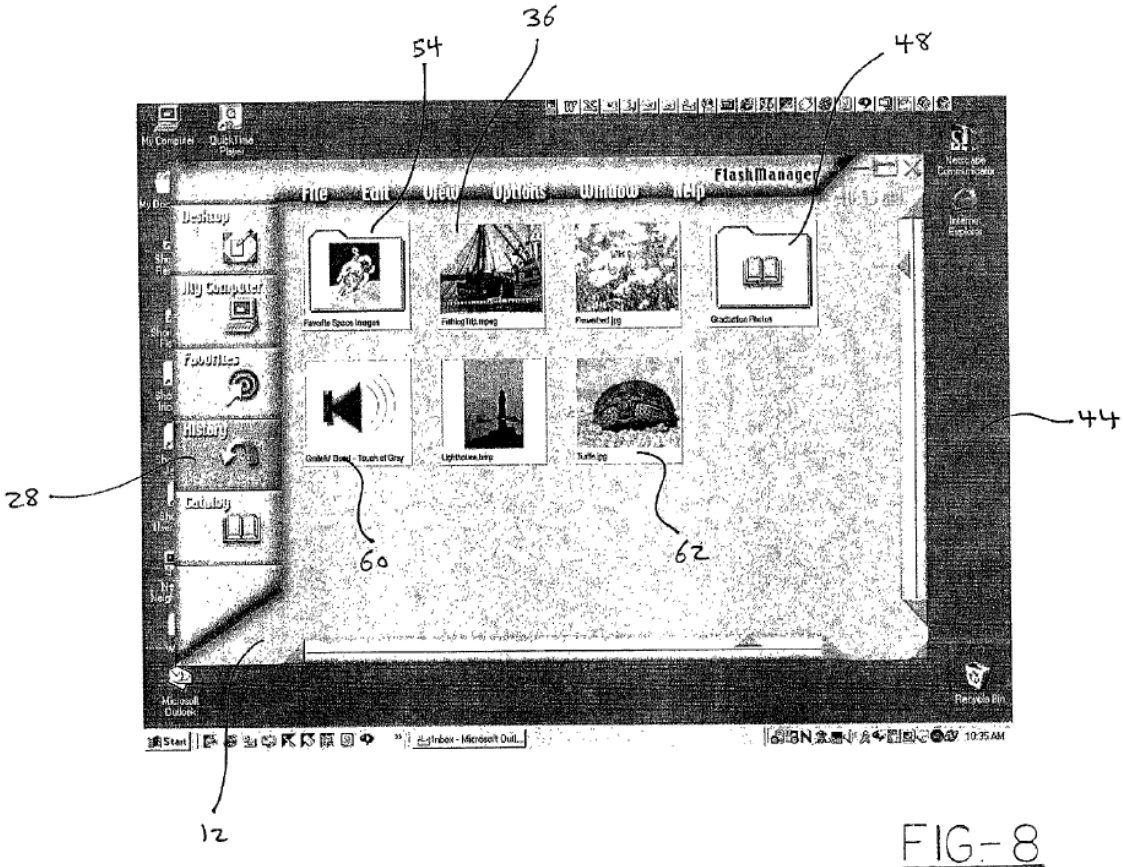

FIG-8

D. Claim 3. The information processing apparatus of claim 1, further comprising: an antenna for wirelessly receiving the first video information from the other information processing apparatus.

243. The Kaplan-Bryant combination renders this limitation obvious. The Kaplan-Bryant combination renders obvious claim 1, including the use of a wireless modem as discussed for limitations [1a] and [1b]. A POSITA would have understood or at least found it obvious to use an antenna for such a wireless modem for the same reasons discussed above for claim 3 in Ground 1.

E. Claim 4. [4a] The information processing apparatus of claim 1, wherein the plurality of stored video information includes third video information recorded by the information processing

apparatus, fourth video information, and fifth video information, [4b] wherein the display displays a user interface having thumbnails corresponding to each of the third, fourth, and fifth video information.

244. The Kaplan-Bryant combination renders this limitation obvious. The Kaplan-Bryant combination renders claim 1 obvious as discussed above. Kaplan discloses that multiple instances of video information, including both individual videos as well as collections of videos, can be recorded (*e.g.*, stored on a hard disk of the computer) in Kaplan's system as shown below in Figs. 7 and 8 below. These instances are the claimed third, fourth, and fifth video information, and they are displayed using thumbnail representations in the user interfaces shown in Figs. 7 and 8.

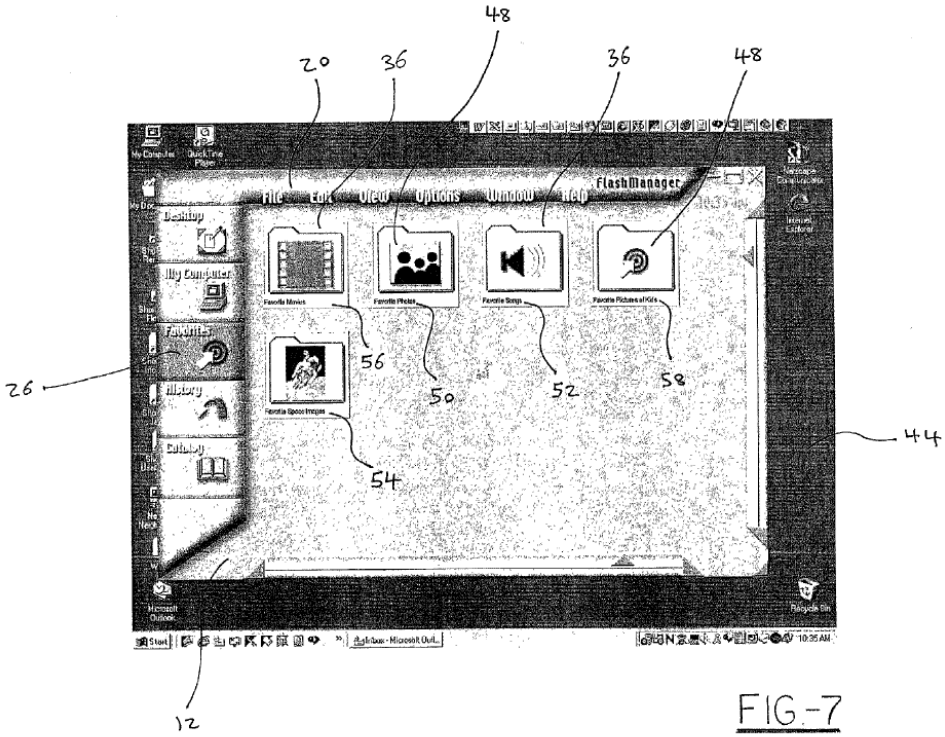

FIG-7

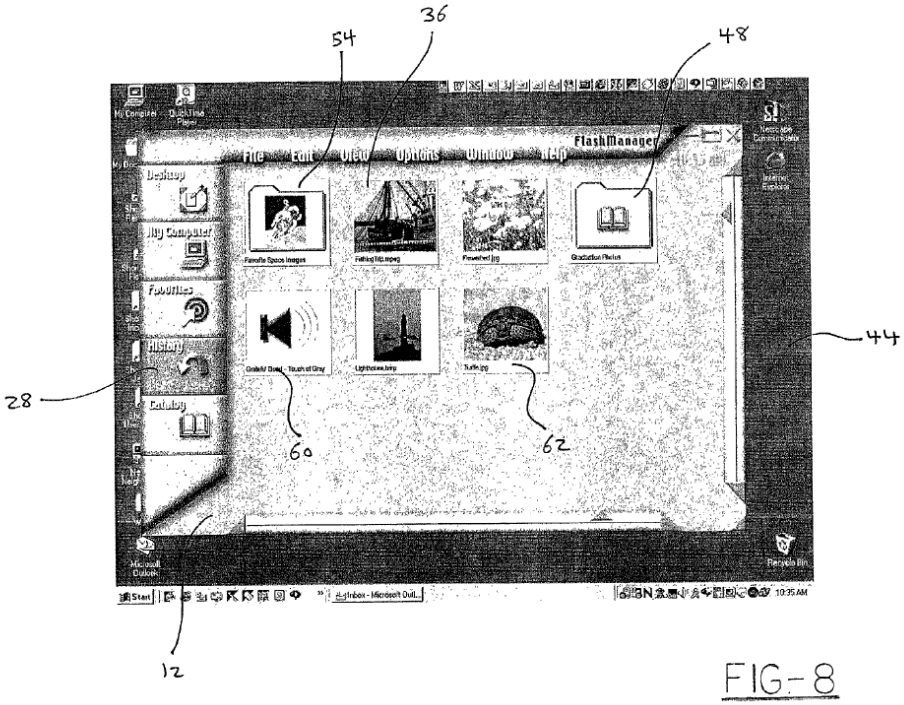

FIG-8

F. Claim 5. The information processing apparatus of claim 4, wherein the display displays the third, fourth, and fifth video information according to predetermined playback sequence.

245. The Kaplan-Bryant combination renders this limitation obvious. The Kaplan-Bryant combination renders claim 1 obvious as discussed above. Kaplan further discloses a "Playlist, which records the order that a user selects video and/or audio files and allows them to be played back in sequence." EX1014, ¶6; *see also* ¶56. Claim 5 is therefore obvious over these disclosures.

G. Claim 6. [6a] The information processing apparatus of claim 1, wherein the plurality of stored video information includes third video information, fourth video information, and fifth video information, [6b] wherein the plurality of stored video information includes management information corresponding to the third, fourth, and fifth video information, [6c] wherein the management information includes filename information and timing information for each of the third, fourth, and fifth video information such that when the third, fourth, and fifth video

information is stored in the recording medium the filename information is updated according to a predetermined sequence.

246. The Kaplan-Bryant combination renders this limitation obvious. The Kaplan-Bryant combination renders claim 1 obvious as discussed above. Kaplan discloses third, fourth and fifth video information as discussed above for claim 4 (see Figs. 7 and 8). Bryant also discloses third, fourth and fifth video information, *i.e.*, the thumbnails in Figs. 9A-9C discussed above for limitation [1k]. Bryant further discloses management information including a general assets table 600 and a table of fields for each media object as shown in Fig. 8 below and described in Bryant at ¶¶82-87:

600

OBJECT 1 (100_1686)	632
OBJECT 2 (100_1687)	634
OBJECT 3 (100_1688)	636
OBJECT 4 (100_1689)	638
OBJECT 5 (100_1690)	640
OBJECT 6 (100_1691)	642
OBJECT 7 (100_1692)	644
OBJECT 8 (100_1693)	646
OBJECT 9 (100_1694)	648
OBJECT 10 (100_1695)	650
OBJECT 11 (100_1696)	652

610

FIELD (612)	TYPE (614)	EXPOSE (616)	
CAPDATE	DATE/TIME	YES	660
IMAGE CAPTION	STRING	YES	662
CLGDATE	DATE/TIME	YES	664
FAVLEVEL	INTEGER	YES	666
FILESIZE	INTEGER	YES	668
FORMAT	STRING	YES	670
GROUP NUMBER	INTEGER	YES	672
GROUP NAME	STRING	YES	674
IMGHEIGHT	INTEGER	NO	676
IMGWIDTH	INTEGER	NO	678
IMAGEPATH	STRING	NO	680
MODDATE	DATE/TIME	YES	682
IMAGENAME	STRING	YES	684
PROTECTED	INTEGER	YES	686
THMHEIGHT	INTEGER	NO	688
THMWIDTH	INTEGER	NO	690
THMNAIL	DB BLOB	NO	692

FIG. 8

247. This management information includes filename information for each object, *i.e.*, the designations inside the parentheticals in table 600. EX1015, ¶83. The management information also includes timing information, *i.e.*, the CLGDATE (catalog date and time). *Id.* Thus, when a field such as "FAVLEVEL"

is updated, the update is performed according to the predetermined sequence reflected in Fig. 8. EX1015, ¶77.

H. Claim 9.

1. [9pre] An information processing method implemented on an information processing apparatus, the information processing method comprising:

248. To the extent the preamble is limiting, Kaplan and Bryant render it obvious. *Supra* [1pre].

2. [9a] storing a plurality of video information including first video information received wirelessly by a network interface over a network from another information processing apparatus,

249. *See supra* [1b].

3. [9b] wherein at least some of the plurality of video information is associated with a user profile; and

250. *See supra* [1c].

4. [9c] displaying:

251. *See supra* [1d].

5. [9d] a first area including a first character associated with a first group of video information for a first classification and a second character associated with a second group of video information for a second classification different from the first classification,

252. *See supra* [1f].

6. [9e] the first group of video information being configured to allow a user to edit,

253. *See supra* [1g].

7. [9f] wherein the first group of video information and the second group of video information are part of the plurality of stored video information, and

254. *See supra* [1h].

8. [9g] a second area displaying thumbnails corresponding to at least a portion of the plurality of stored video information,

255. *See supra* [1i].

9. [9h] wherein user selection of the first character enables the display of a first group of thumbnails corresponding to the first group of video information in the second area, and

256. *See supra* [1j].

10. [9i] wherein user selection of the second character enables the display of a second group of thumbnails corresponding to the second group of video information in the second area;

257. *See supra* [1k].

11. [9j] upon one video information stored on the recording medium included in both the first group of video information and the second group of video information being deleted from the first group of video information, the one video information continues to be included in the second group of video information,

258. *See supra* [1l].

12. [9k] and displaying a thumbnail corresponding to the one video information as one of the second group of thumbnails when the second character is selected;

259. *See supra* [1m].

13. [9l] wherein the processor generating a group of video information based on user preferences determined by the user selections of the video information, and

260. *See supra* claim 2.

14. [9m] upon user selection of the group, displaying thumbnails that correspond to the video information and no other thumbnails associated with video information of other users.

261. *See supra* claim 2

I. Claim 10. The information processing method of claim 9, further comprising: wirelessly receiving the first video information from the other information processing apparatus via an antenna of the information processing apparatus.

262. *See supra* claims 9, 3.

J. Claim 11

1. [11a] The information processing method of claim 9, wherein the plurality of stored video information includes third video information recorded by the information processing apparatus, fourth video information, and fifth video information,

263. *See supra* claim 9, [4a].

2. [11b] wherein the information processing apparatus displays a user interface having thumbnails corresponding to each of the third, fourth, and fifth video information.

264. *See supra* [4b].

K. Claim 12. The information processing method of claim 11, wherein the information processing apparatus displays the third, fourth, and fifth video information according to predetermined playback sequence.

265. *See supra* claims 11, 5.

L. Claim 13

1. [13pre] The information processing method of claim 9,

266. *See supra* claim 9.

2. [13a] wherein the plurality of stored video information includes third video information, fourth video information, and fifth video information,

267. *See supra* [6a].

3. [13b] wherein the plurality of stored video information includes management information corresponding to the third, fourth, and fifth video information,

268. *See supra* [6b].

4. [13c] wherein the management information includes filename information and timing information for each of the third, fourth, and fifth video information such that when the third, fourth, and fifth video information is stored in the recording medium the filename information is updated according to a predetermined sequence.

269. *See supra* [6c].

X. GROUND 5: KAPLAN, BRYANT AND WINTV

A. Motivation to Combine WinTV with the Kaplan-Bryant Combination

270. Both Kaplan and Bryant disclose connecting their personal computers to a source of video, such as a motion-only video camera. EX1015, ¶36; EX1014, ¶58. Kaplan discusses television content. EX1014, ¶3. WinTV discloses a WinTV television tuner card and associated software configured for installation in a

personal computer such as those disclosed in Bryant and Kaplan. *See* Section V.B; *see also* figure in EX1010 at 1-2:

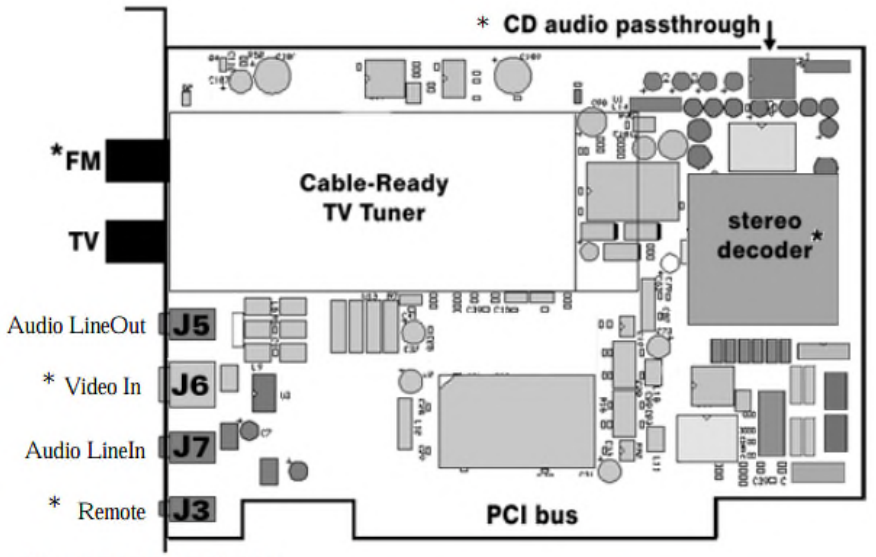

*Note: not available on all models.
Note: this outline may not reflect the current revision of your WinTV board. For the most up to date information, see the WinTV QuickInstall Guide provided with your WinTV board.

271. Accordingly, a POSITA would have found it obvious to include WinTV's television tuner card in a Kaplan-Bryant PC as taught by WinTV to improve the Kaplan-Bryant device with the additional capability of capturing videos from television signals such as NTSC television signals. A POSITA would have had a reasonable expectation of success in making this combination because such combinations were known in the art and involved no more than ordinary skill.

B. Claims 7, 8, 14, and 15

272. A Kaplan-Bryant personal computer including a WinTV card renders obvious claims 7, 8, 14, and 15 for the same reasons the Horn-Baumgartner-WinTV combination renders those claims obvious as discussed above in Ground 2.

XI. GROUND 6: HORN, BAUMGARTNER & CANDELORE

A. Motivation to Combine

1. Horn and Baumgartner

273. It would have been obvious to a POSITA to combine Horn with Baumgartner for the reasons discussed above in §VI.A.

2. Horn-Baumgartner and Candelore

274. Moreover, in my opinion it would have been obvious to a POSITA to further modify the Horn/Baumgartner combination by using encrypted content (e.g., received video information) as taught by Candelore, and a POSITA would have been motivated to do so.

275. Doing so would have provided security to the video information of the Horn-Baumgartner devices and methods. Combining Candelore with Horn-Baumgartner would simply involve applying a known technique (*i.e.*, encrypted content) to a known device ready for improvement (the Horn/ Baumgartner computer system receiving and storing video information) to yield predictable results (secured video information). It is my understanding from counsel that this is proper rationale for an obviousness determination.

276. A POSITA would have had a reasonable expectation of success in the combination because Horn-Baumgartner had processors capable of performing the

algorithms used by Candelore to implement the additional encryption and decryption schemes of Candelore.

B. Claim 16

1. [16pre] A method for reproducing video content associated with user profiles being implemented on an information processing apparatus, comprising:

277. To the extent the preamble is limiting, Horn discloses it. Horn discloses a system/method "to provide information management tools that facilitate communication to generate, transmit and receive, archive, search, order, retrieve and render objects, ***including information organization personalized for each individual user based on preferences selected by the user***." EX1005, 6:11-39; *see also* Abstract, 3:35-43.

278. Horn discloses at 8:58-67:

> Collections: ... allow[] ***users*** to categorize objects in ways that most clearly reflect different approaches and ways of viewing the same information. ***Users*** can select predetermined collections provided in a basic menu, such as Family, Friends, Work, To Do, Activities, and Vacation when running the MFS program for the first time, and can create and set up user-defined collections as well.

EX1005, 9:46-52. Horn also discloses "[u]ser-defined categorization is enabled by a user directly specifying that a given object belongs to a given collection," 15:12-27, and "[w]hen a key phrase is found it lists all collections from ***all users*** that specify that phrase." EX1005, 38:16-24; *see also* 16:5-23, FIG. 10b:

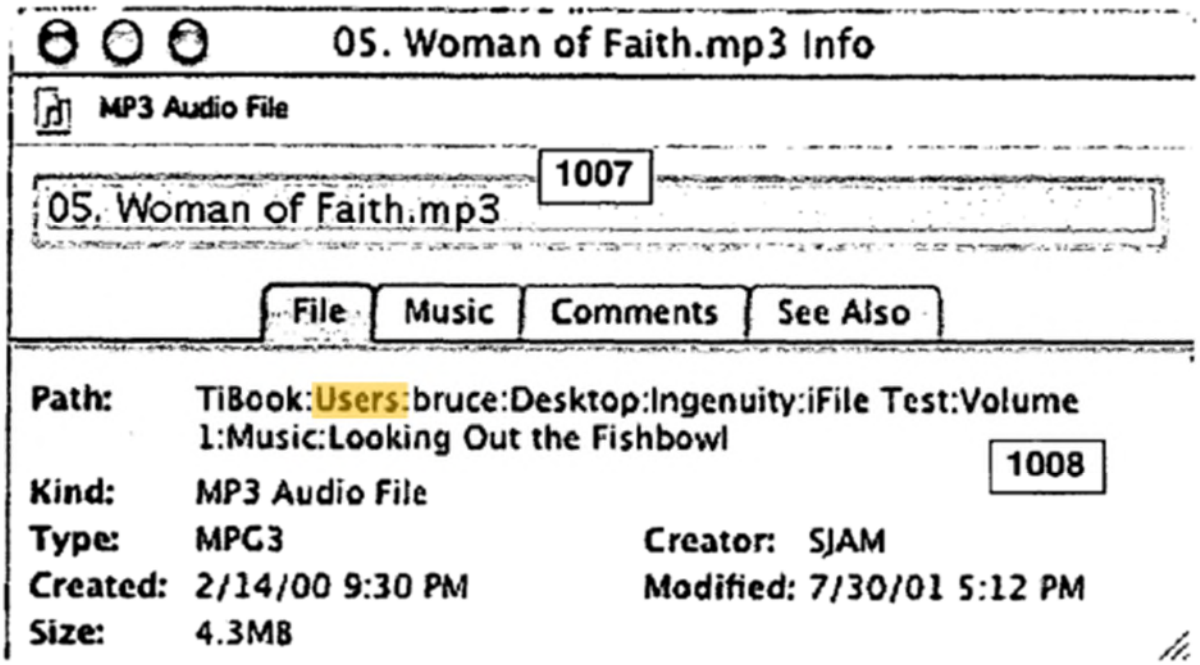

279. Horn-Baumgartner renders obvious video information. §XI.A.

2. [16a] receiving, via a network, first video information wirelessly from a device external to the information processing apparatus, the first video information being received including second video information that is encrypted;

280. Horn-Baumgartner in view of Candelore renders this limitation obvious. Horn discloses a network interface: "said central processing unit reading from user, network or Internet server input devices data relating to objects received by, created by or selected by individual users," EX1005, 6:11-22, and "[a] network interface is coupled to the bus to provide an interface to the data communication network (LAN, WAN, and/or Internet)," 6:59-63, 5:57-60, 11:60-12:7, FIG. 1.

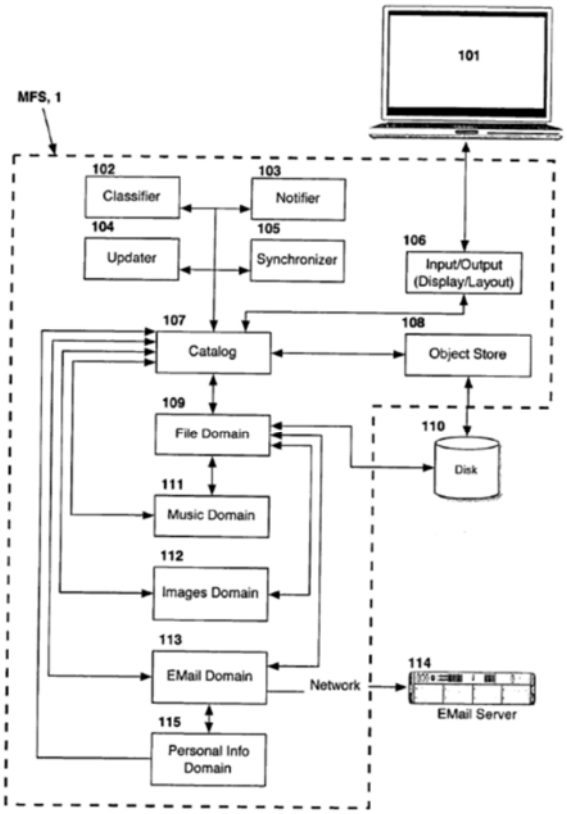

Figure 1

281. Horn discloses receiving digital image information over a network, e.g., the Internet, at 11:60-12:18:

> [A] computer system comprising … one or more network link(s) via an e-mail server 114. ... Representative domains viewable on the desktop include a file domain 109, a music domain 111, images domain 112 an e-mail domain 113 .... ***The e-mail domain is linked through a network for the communication of files, music and images to and from a network link, e.g. the Internet.***

See also EX1005, Abstract, 5:21-6:22, 6:50-58, FIG. 1:

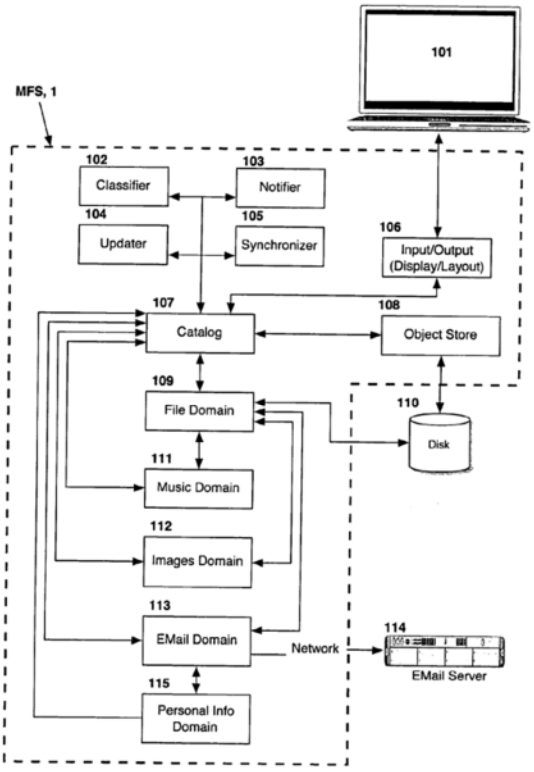

Figure 1

282. Horn discloses that this digital information is received by the network interface identified above. Horn further discloses that this digital image information includes video information, *i.e.*, "movies." EX1005, 12:8-18. A POSITA would have understood that digital information including video information/movies received via the Internet would be transmitted to Horn's computer from a server (referred to in Horn as a "site computer"), which is an information processing apparatus. EX1005, 6:59-63.

283. Horn does not expressly disclose receiving digital video information wirelessly. Horn does disclose its network interface connected to the Internet via a LAN. E.g., EX1005, 6:59-63. A POSITA would have understood that a LAN is

often implemented as a wireless LAN, and a POSITA would have found it obvious to implement Horn's LAN with a wireless LAN because they were often cheaper and easier to install than a wired LAN due to elimination of the need to run wires to all of the endpoint computers in the network. Additionally, wireless LANs can be more convenient for users.

284. Baumgartner is directed toward an "interactive television system with custom video-on-demand menus based on personal profiles." EX1016, title. Baumgartner discloses a system 10 shown below in which "user equipment" such as a PC (e.g., Horn's computer 101) receives and locally stores videos from a server 36 via a communications network 34 such as the Internet over a link 48 which is implemented wirelessly, or alternatively over a satellite path which is also wireless. EX1016, ¶55 (user computer equipment 22 accesses server 36 using communications path 48, which may be "any suitable paths, such as ... **satellite paths, wireless paths**"); ¶57, ¶82 (user equipment 22 in FIG. 1 may be a PC shown in FIG. 5 that receives television programming, video on demand content, and other information receiving via communications path 48 using input/output 104); ¶85; FIGS. 1, 5:

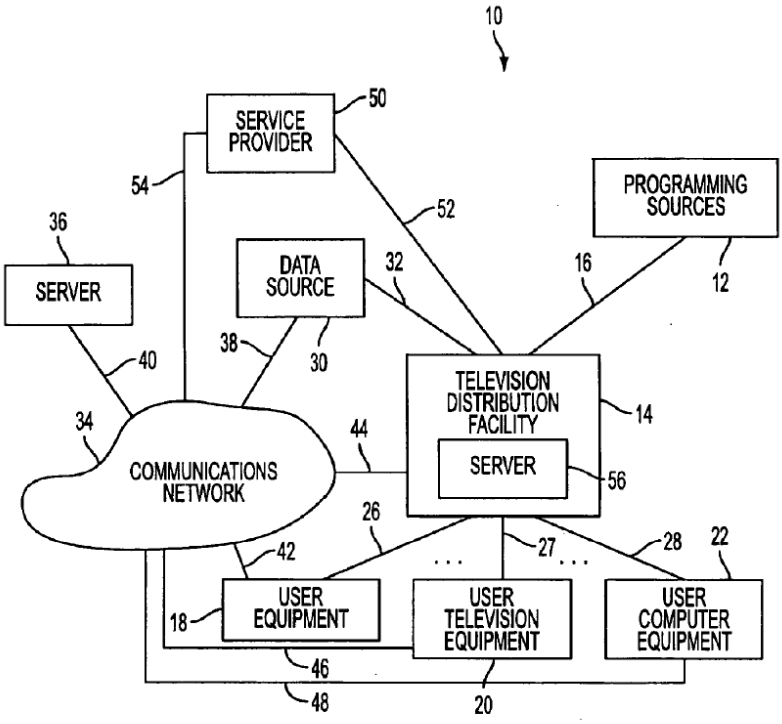

FIG. 1

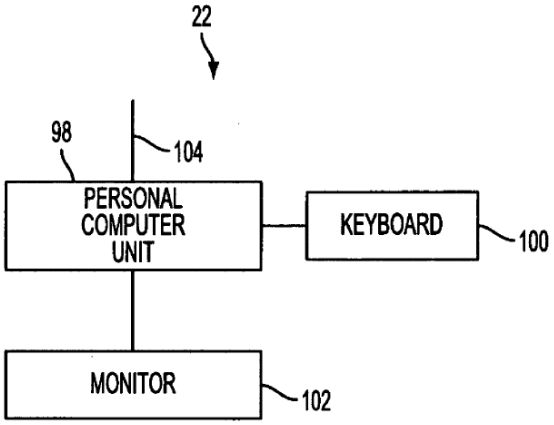

FIG. 5

285. Candelore renders obvious including second video information that is encrypted. Candelore discloses "[a]n encryption algorithm such as DES, M6, or DVB Common Scrambling Algorithm may be used" to encrypt received control

words. EX1013, ¶72. "The encrypted control word 1643 is decrypted using the unique key 1631 (or derivative thereof) to recover the control word in a clear format for descrambling and/or decrypting the encrypted content 1620 loaded into the set-top box 1610." EX1013, ¶131; *see also* ¶72 ("[t]he decrypted CW is then used by descrambler logic 470 to descramble the scrambled program content 480 and output clear program content 490."). A POSITA would have understood that the "the encrypted content 1620 loaded into the set-top box 1610" is the encrypted second video.

3. [16b] displaying, on a display device, a first user interface for a user to select a user profile from among a plurality of user profiles including a first user profile associated with a first character and a second user profile associated with a second character,

286. The Horn-Baumgartner combination renders obvious this limitation. Horn discloses "***computer 101 with an output display screen***." EX1005, 11:60-12:7.

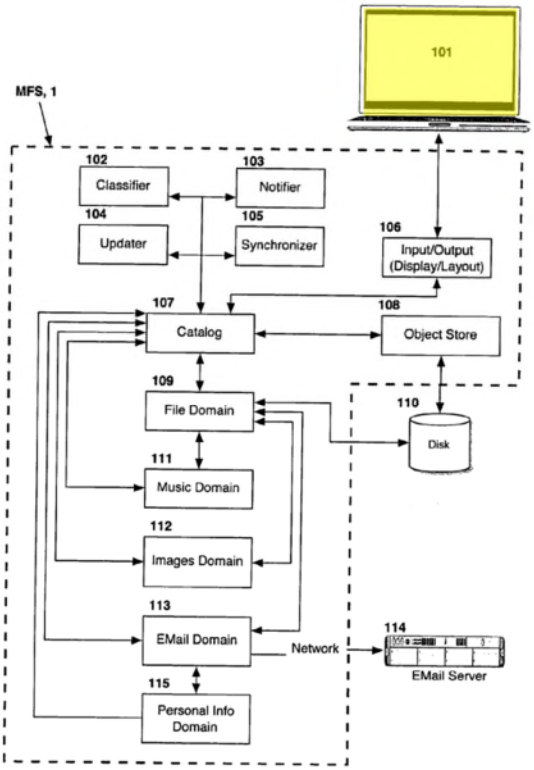

Figure 1

287. Baumgartner also discloses a display, the monitor of user PC.

EX1016, ¶82 FIG. 5.

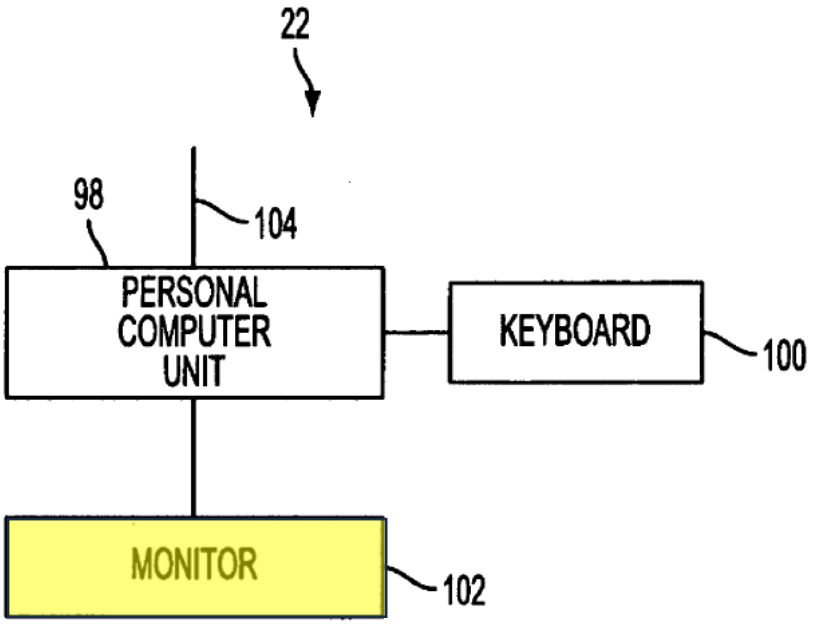

FIG. 5

288. As discussed above in §XI.A, it would have been obvious to combine Baumgartner's user-selectable user profiles with Horn's system. Baumgartner discloses an embodiment in which a user selects his or her profile from among a plurality of user profiles "by pressing a button assigned to them." EX1016, ¶165. s*ee also* [0172]. Baumgartner does not provide additional detail as to how to implement such user profile buttons, but a POSITA would have found it obvious to implement such buttons in a GUI screen as "soft" buttons labeled with the text of the user name associated with the user profile given Baumgartner's extensive disclosure of labeled GUI soft buttons such as the text-labeled GUI buttons 296-314, 336-350, 358-368, and 372-386 in Figs. 24-27. The text of the user name on

the button for a particular user profile includes at least one character associated with that user profile. A POSITA would have found it obvious, for example, to implement Horn's Workspace view as shown in Fig. 26 to include soft buttons labeled with user names for selecting user profiles in the collections pane 2602 annotated in the red box labeled first area and/or the folder pane 2601, either of which constitutes a first user interface.

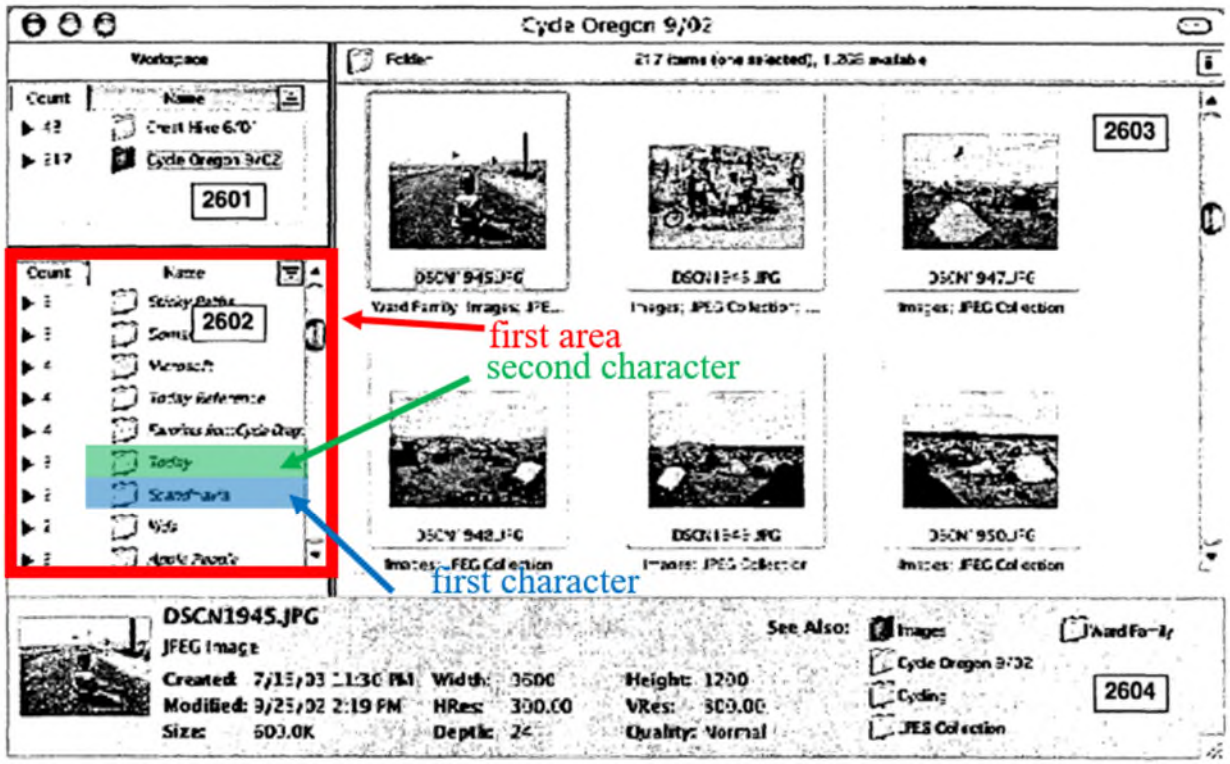

4. [16c] the plurality of user profiles being associated with video information and the first user interface including an

option for a user to select the first user profile from the plurality of user profiles by selecting the first character;

289. The Horn-Baumgartner combination renders obvious this limitation. With respect to the "and the first user interface . . . selecting the first character" portion of this limitation, *see* §XI.B.3.

290. With respect to the portion of this limitation requiring the plurality of user profiles being associated with video information, Horn discloses that at least some of its information is associated with a user profile by providing tools "to generate, transmit and receive, archive, search, order, retrieve and render objects, ***including information organization personalized for each individual user based on preferences selected by the user***." EX1005, 6:11-22, 3:35-43.

291. Horn discloses at 8:58-67:

> Collections: ... allow[] users to categorize objects in ways that most clearly reflect different approaches and ways of viewing the same information. Users can select predetermined collections provided in a basic menu, such as Family, Friends, Work, To Do, Activities, and Vacation when running the MFS program for the first time, and can create and set up user-defined collections as well.

EX1005, 15:12-27. Horn also discloses that "[u]ser-defined categorization is enabled by a user directly specifying that a given object belongs to a given

collection." EX1005, 6:5-23. When a user specifies that a given object belongs to a user-defined collection, that object becomes associated with a user profile.

292. Baumgartner also discloses videos associated with user profiles. Baumgartner discloses a user profile that may include information such as a user's demographic characteristics, likes and dislikes, information gathered by monitoring the user's ***interaction*** with the user's user equipment, and more broadly "any information that may be indicative of the user's interests." EX1016, ¶10. Baumgartner further discloses identifying video information that correlates to the user profile and presenting that video information for selection by the corresponding user. EX1016, ¶¶11-13. This creates an association of that video information with the corresponding user profile as broadly claimed in the '815 patent.

293. Horn discloses that at least some of its information is associated with a user profile by providing tools "to generate, transmit and receive, archive, search, order, retrieve and render objects, ***including information organization personalized for each individual user based on preferences selected by the user***." EX1005, 6:11-22, 3:35-43.

294. Horn discloses at 8:58-67:

> Collections: ... allow[] users to categorize objects in ways that most clearly reflect different approaches and ways of viewing the same information. Users can select predetermined collections provided in a basic menu, such as Family, Friends, Work, To Do, Activities, and

> Vacation when running the MFS program for the first time, and can create and set up user-defined collections as well.

EX1005, 15:12-27. Horn also discloses that "[u]ser-defined categorization is enabled by a user directly specifying that a given object belongs to a given collection." EX1005, 6:5-23. When a user specifies that a give object belongs to a user-defined collection, that object becomes associated with a user profile.

295. Baumgartner also discloses videos associated with user profiles. Baumgartner discloses a user profile that may include information such as a user's demographic characteristics, likes and dislikes, information gathered by monitoring the user's interaction with the user's user equipment, and more broadly "any information that may be indicative of the user's interests." EX1016, ¶10. Baumgartner further discloses identifying video information that correlates to the user profile and presenting that video information for selection by the corresponding user. EX1016, ¶¶11-13. This creates an association of that video information with the corresponding user profile as broadly claimed in the '815 patent.

5. [16d] receiving a selection of the first user profile;

296. See XI.B.3.

6. [16e] displaying, in response to the selection, a second user interface for a user to select desired video information to be reproduced from among the first video information,

297. The Horn-Baumgartner combination renders obvious this limitation. Baumgartner discloses that its system generates customized menus such as program guides listing content corresponding to the user profile in response to pressing a button to select a desired user profile. EX1016, ¶¶165-166. Baumgartner further discloses identifying video information that correlates to the user profile and presenting that video information for selection by the corresponding user. EX1016, ¶¶11-13. A POSITA would have found it obvious in light of this disclosure in Baumgartner to configure Horn's system to display to a user a second user interface such as Horn's Workspace view as shown in the annotated version of Fig. 26 shown below, with user-selectable content corresponding to the user profile that was selected by the user being displayed in the content pane 2603 and the metadata pane 2604 (the areas surrounded by the purple boxes, together the claimed second user interface).

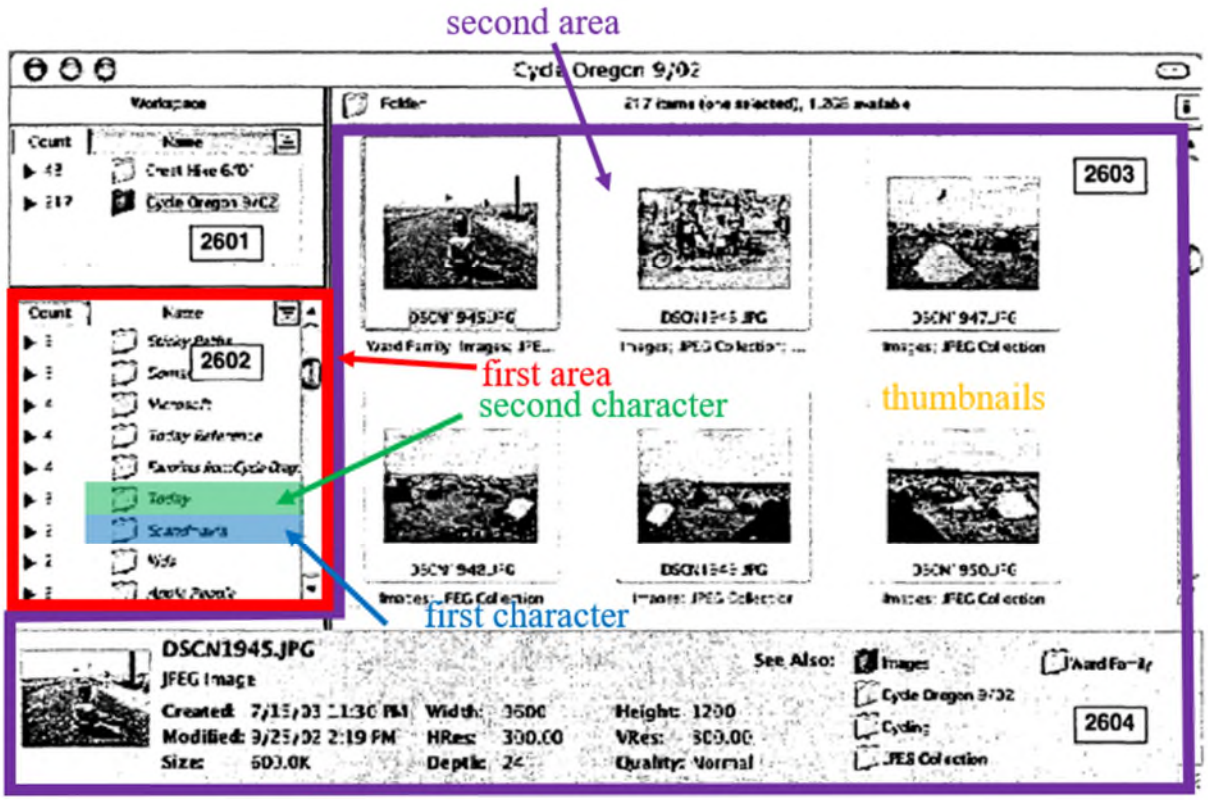

7. [16f] the second user interface being associated with the first user profile and displaying the first character, the first character associated with a first group of video information and indicating an identity of the user of the first user profile,

298. The Horn-Baumgartner combination renders obvious this limitation. *See* §XI.B.6. The second user interface is associated with the first user profile for the reasons discussed above in §XI.B.3 and §XI.B.6. The second user interface/second area of Horn's Workspace view in Fig. 16 above does not explicitly show the user name associated with the user profile to which the content in the content pane 2603 pertains, but doing so would have been obvious to a user.

In particular, a POSITA would have found it obvious to include the user name in the metadata pane 2604 as discussed in Horn at 19:55-57. The metadata pane 2604 constitutes part of the second under interface in this read. The user name and all characters thereof (a claimed first character) indicate the identity of the user of the first user profile and are associated with the video information in the content pane 2603 as demonstrated in §XI.B.4 and §XI.B.6.

8. [16g] the second user interface further displaying thumbnails corresponding to the first group of video information;

299. The Horn-Baumgartner combination renders obvious this limitation. §XI.B.6. Thumbnails are disclosed by Horn in FIG. 26 shown below.

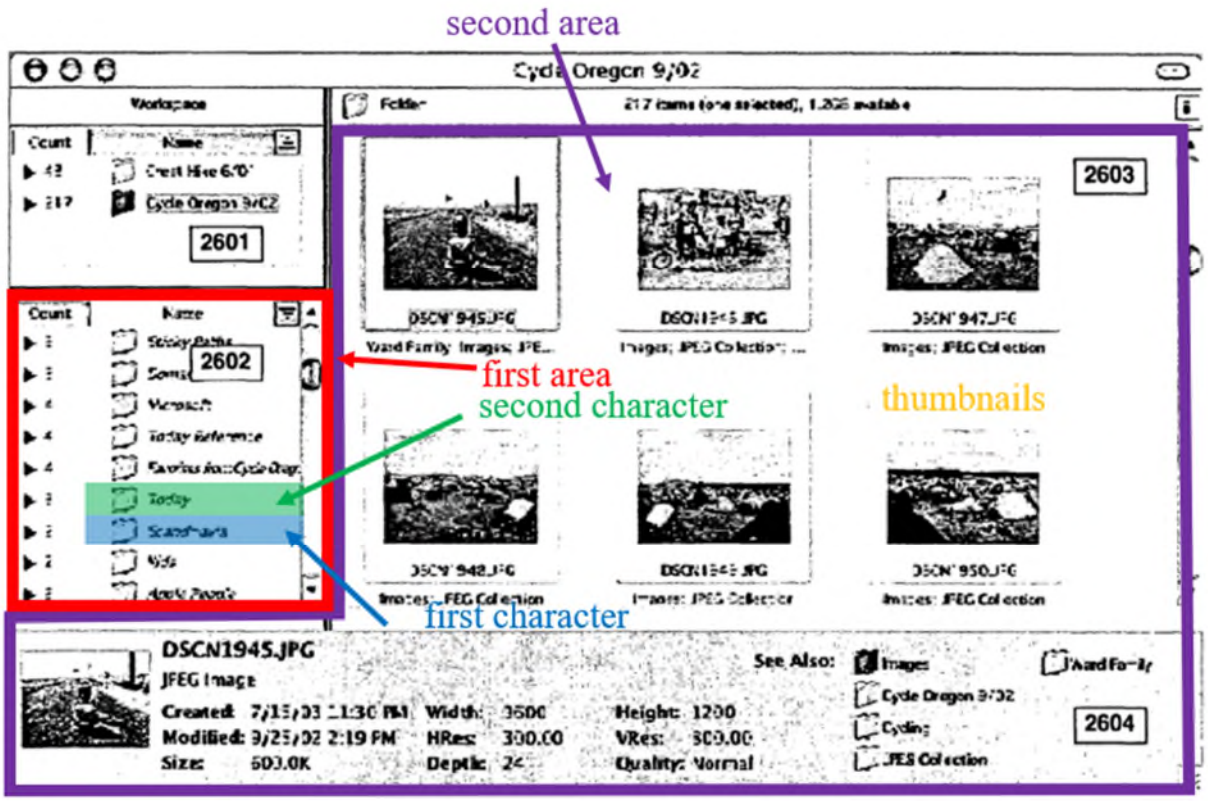

EX1005, FIG. 26.

300. Horn discloses a second area (*e.g.*, content pane 2603, highlighted in purple) displaying thumbnails corresponding to at least a portion of the plurality of stored information, i.e., thumbnails for the objects corresponding to the user profile selected from the list in the pane 2602. EX1005, 19:48-54; *see also* 19:25-57.

9. [16h] displaying the second character and a second group of thumbnails corresponding to a second group of video information associated with the second user profile when the second character is selected,

301. The Horn-Baumgartner combination renders obvious this limitation. For the same reasons that it would have been obvious to a POSITA to display Horn's Workspace view content represented by thumbnails corresponding to a first user and user profile and the user name in the second user interface (content pane 2603 and metadata pane 2604) as discussed above in §§XI.B.3, XI.B.6 and XI.B.7, a POSITA would have found it obvious to display a second group of thumbnails representing content corresponding to a second user profile when the second profile is selected.

10. [16i] the first group of video information and the second group of video information including one video information that is the same;

302. The Horn-Baumgartner combination renders obvious this limitation. Horn discloses that the collections that form the first and second groups of

information are part of the plurality of stored information objects. EX1005, 4:1-5; 4:51-60; 19:42-45; 30:44-31:16.

303. Horn explains that the objects viewed by reference are from collections. *Id.* Horn discloses a first group of information, i.e., a collection, is configured to allow a user to edit membership in the collection by, e.g., adding and removing objects (individual items, such as individual photos) to/from the collection. Horn discloses at 20:16-46:

> Manually Categorizing Objects into Collections. The user may now view images from any of the source folders, and by dragging their icon representations to either the collection window or the icon representation in the Workspace, add those images to the collection. ... The user may also quickly create a collection of images by selecting the images and choosing the Collect command; this gathers together the images into a collection…. Items may be re-categorized into different collections by dragging them to the new collections directly. Also, items may be removed from a collection by choosing the Remove command ....

304. Horn also discloses "[b]ecause MFS remembers settings and views, the user can set up collections and preferred ways of viewing them and keep them available at all times, constantly updated." EX1005, 17:18-45, FIGS. 21-22. While Horn illustrates this concept using images/photos, a POSITA would have understood or at least found obvious to provide this same functionality for collections of video information such as movies as taught by Horn and Baumgartner.

305. Horn teaches that the same information can belong to multiple collections: "clicking on the icon or list reference to an object in one collection window and dragging it into another collect window establishes a new link; the object is now accessible from both collections." EX1005, 9:1-16; *see also* Abstract, 8:59-67, 23:57-24:12. Similarly, a POSITA would have understood in view of Baumgartner's disclosures that a particular program corresponding to one user's profile could correspond to multiple profiles.

11. [16j] receiving a selection to remove the one video information from the first group of video information associated with the first user profile;

12. [16k] removing the one video information from the first group of video information, wherein, upon the one video information being removed from the first group of video information, the one video information continues to be included in the second group of video information for the second user profile and the second group of thumbnails continues to display a thumbnail corresponding to the one video information when the second character is selected;

306. Horn-Baumgartner renders these limitations obvious. Horn discloses "storing *only one instance of each object while linking the object to multiple collections* and domains by unique metadata links for the grouping into and retrieval from any of the collections." EX1005, Abstract.

307. Horn also discloses at 20:16-46:

> …items may belong to more than one collection at a time. ... ***[I]tems may be removed from a collection*** by choosing the Remove command, ***which removes the items from the collection but does not***

otherwise delete the items from the source (e.g. the file system) or any other collections.

308. Horn discloses removing the one information from the first group of information, wherein, upon the one information being removed from the first group of information, the one information continues to be included in the second group of information. According to Horn, "***items may be removed from a collection by choosing the Remove command, which removes the items from the collection but does not otherwise delete the item from the source (e.g., the file system) or any other collections***." EX1005, 20:41-46; *see also* 23:57-24:11.

13. [16l] receiving a selection of desired video information based on a selection of a thumbnail from the first group of thumbnails, the desired video information included in the second video information;

309. Horn-Baumgartner renders this limitation obvious. Horn discloses that a user can select a thumbnail in the content pane 2603 of Fig. 26 for viewing in a new window. EX1005, 19:58-60. The content corresponding to one of the thumbnails can correspond to second information received in encrypted form as discussed in §XI.B.2.

14. [16m] decrypting video information corresponding to the selected thumbnail; and displaying the decrypted video information.

310. Horn-Baumgartner in combination with Candelore combination renders this limitation obvious. §XI.B.2; EX1013, ¶¶72, 131.

C. Claim 17. The method of claim 16, wherein any user can delete stored video information regardless of a user profile from the plurality of user profiles that was used to record the stored video information.

311. Horn-Baumgartner-Candelore render obvious the method of claim 16. §XI.B. Baumgartner renders this limitation obvious. Baumgartner discloses that its "application may allow the user to establish parental control settings" where "the user may lock a particular program, a program rating, a channel, a type of content (e.g., violent or sexual content)." EX1014, ¶148. A POSITA would have understood that using Baumgartner's parental control would allow a first user to block content for a second user, which is substantially the same as deleting that content from the second user's video information. A POSITA would have understood that setting a parental control for other users would result in the deletion of stored video information (media content pointers) for prohibited content. Moreover, Baumgartner discloses its "interactive television program guide may also use a combination of profiles at the same time, for example, if multiple household members are viewing the television at the same time." EX1014, ¶165. In that case, one user could delete stored video information in a manner that satisfies this claim.

D. Claim 18. The method of claim 16, further comprising: generating a list of video information based on preferences of a user

determined by a user selections of thumbnails from the first or second group of thumbnails.

312. Horn-Baumgartner-Candelore render obvious the method of claim 16. §XI.B. Horn renders this limitation obvious. Horn discloses a process providing "information management tools that facilitate communication to generate, transmit and receive, archive, search, order, retrieve and render objects, ***including information organization personalized for each individual user based on preferences selected by the user.***" EX1005, 6:11-22; *see also* 3:35-43.

313. Horn also discloses at 8:58-67:

> Collections: ... allow[] users to categorize objects in ways that most clearly reflect different approaches and ways of viewing the same information. Users can select predetermined collections provided in a basic menu, such as Family, Friends, Work, To Do, Activities, and Vacation when running the MFS program for the first time, and can create and set up user-defined collections as well.

314. Horn further discloses "[u]ser-defined categorization is enabled by a user directly specifying that a given object belongs to a given collection." EX1005, 15:12-27; *see also* 16:5-23.

E. Claim 19

1. [19a] The method of claim 16, further comprising: generating a list of video information based on preferences of a user determined by a user selections of thumbnails

associated with the first video information, the list including third video information;

315. Horn-Baumgartner-Candelore render obvious the method of claim 16. §XI.B. Horn-Baumgartner discloses third video information. EX1005, 18:52-58; 19:6-16; §XI.A. Horn-Baumgartner renders this limitation obvious. §XI.D.

2. [19b] receiving a selection of the list by the user; and in response to the selection of the list, displaying the thumbnails that correspond to the third video information and no other thumbnails associated with video information of other users.

316. Horn-Baumgartner renders this limitation obvious. §XI.E.1, *see also* §§XI.B, XI.D; EX1007, FIG. 6.

F. Claim 21

1. [21pre] An information processing apparatus comprising:

317. To the extent the preamble is limiting, Horn discloses an information processing apparatus. Horn discloses that "[t]he invention relates to computer data processing systems that include central processing units configured with novel software-based information management systems." EX1005, 1:18-30, Title, Abstract, 5:27-6:23, FIG. 1.

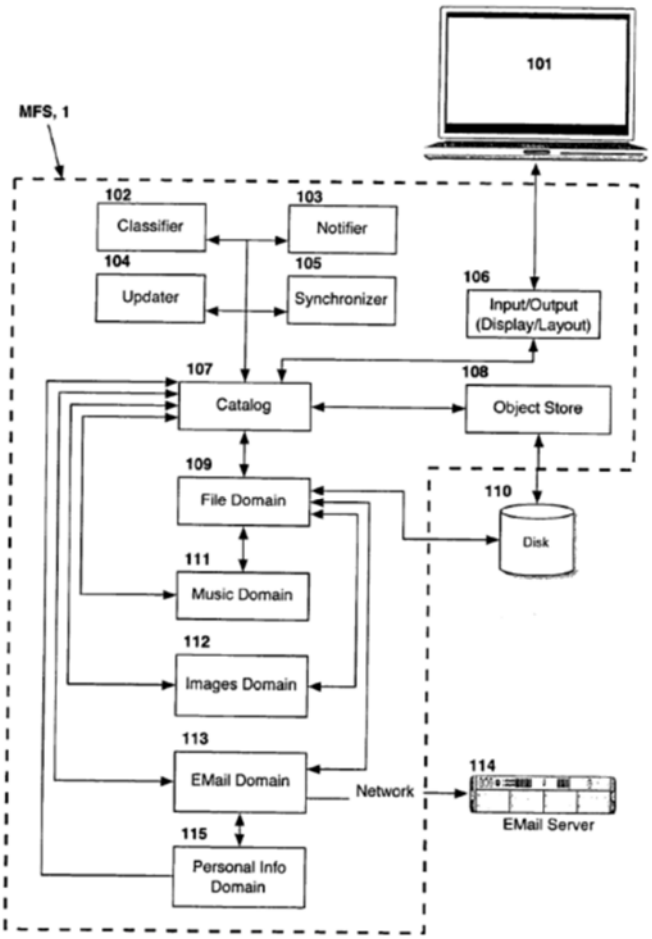

Figure 1

2. [21a] a network interface receiving first video information wirelessly from a device external to the information processing apparatus, the first video information being received including second video information that is encrypted;

318. §XI.B.2.

3. [21b] a display displaying a first user interface for a user to select a user profile from among a plurality of user profiles including a first user profile associated with a first character and a second user profile associated with a second character,

319. §XI.B.3.

4. [21c] the plurality of user profiles being associated with video information and the first user interface including an option for a user to select the first user profile from the plurality of user profiles by selecting the first character;

320. §XI.B.4.

5. [21d] an input interface receiving a selection of the first user profile at a first time and a selection of the second character at a second time,

321. §XI.B.5. Baumgartner discloses selection of different user profiles at different times. *Id.*

6. [21e] wherein, in response to the selection of the first user profile, the display displays a second user interface for a user to select desired video information to be reproduced from among the first video information,

322. §§XI.B.5, XI.B.6.

7. [21f] the second user interface being associated with the first user profile and displaying the first character, the first character associated with a first group of video information and indicating an identity of the user which the first user profile is associated with,

323. §XI.B.7.

8. [21g] the second user interface further displaying thumbnails corresponding to the first group of video information, and

324. §XI.B.8.

9. [21h] wherein, in response to the selection of the second user profile, the display displays the second character and a second group of thumbnails corresponding to a second

group of video information associated with the second user profile when the second character is selected,

325. §XI.B.9.

10. [21i] the first group of video information and the second group of video information including one video information that is the same; and

326. §XI.B.10.

11. [21j] a processor for removing one video information from the first group of video information after the input interface receives a selection to remove the one video information from the first group of video information associated with the first user profile,

12. [21k] wherein, upon the one video information being removed from the first group of video information, the one video information continues to be included in the second group of video information for the second user profile and the second group of thumbnails continues to display a thumbnail corresponding to the one video information when the second character is selected,

327. §§XI.B.11, XI.B.12, XI.F.5.

13. [21l] wherein the processor decrypts second video information corresponding to a selected thumbnail when the input interface receives a selection of desired video information based on a selection of a thumbnail from the first group of thumbnails, and

328. §§XI.B.13, XI.B.14.

14. [21m] wherein the display displays the decrypted video information.

329. §XI.B.14.

G. Claim 22. The information processing apparatus of claim 21, further comprising: an antenna for wirelessly receiving the first video information.

330. Horn-Baumgartner-Candelore render obvious the information processing apparatus of claim 21. §XI.F. The Horn-Baumgartner combination renders this limitation obvious. Horn discloses a connection to the Internet, and Baumgartner discloses that the connection can be wireless. EX1016, ¶55. A POSITA would have understood that for the Horn-Baumgartner apparatus to wirelessly receive the first video information from the Internet, an antenna would be required and also would have found it obvious to include an antenna for such a wireless connection because the use of antennas for wireless and satellite connections was ubiquitous. See, e.g., EX1018.

H. Claim 23. The information processing apparatus of claim 21, wherein any user can delete stored video information regardless of a user profile from the plurality of user profiles that was used to record the stored video information.

331. Horn-Baumgartner-Candelore render obvious the information processing apparatus of claim 21. §XI.F. Baumgartner renders this limitation obvious. §XI.C.

I. Claim 24. The information processing apparatus of claim 21, wherein the processor generates a list of video information based

on preferences of a user determined by a user selections of thumbnails from the first or second group of thumbnails.

332. Horn-Baumgartner-Candelore render obvious the information processing apparatus of claim 21. §XI.F. Horn renders this limitation obvious. §XI.D.

J. Claim 25

1. [25a] The information processing apparatus of claim 21, wherein the processor generates a list of video information based on preferences of a user determined by a user selections of thumbnails associated with the first video information, the list including third and fourth video information, and,

333. Horn-Baumgartner-Candelore render obvious the information processing apparatus of claim 21. §XI.F. Horn-Baumgartner renders this limitation obvious. §XI.E.1. Horn discloses fourth information. EX1005, 18:52-58; 19:6-16.

2. [25b] in response to the input interface receiving a selection of the list by the user, the display displays only those thumbnails that correspond to the third and fourth video information and no other thumbnails associated with video information of other users.

334. Horn-Baumgartner renders this limitation obvious. §XI.E.2, §XI.J.1.

XII. GROUND 7: HORN, BAUMGARTNER, CANDELORE & WINTV

A. Motivation to Combine WinTV with the Horn/Baumgartner/Candelore Combination

335. Baumgartner explicitly suggests including, in its PC (FIG. 5), a television tuner card for decoding analog and digital television channels. EX1016,

¶83. WinTV discloses a WinTV television tuner card and associated software configured for installation in a PC such as those disclosed in Horn and Baumgartner. §IV.B; see also figure in EX1010 at 1-2:

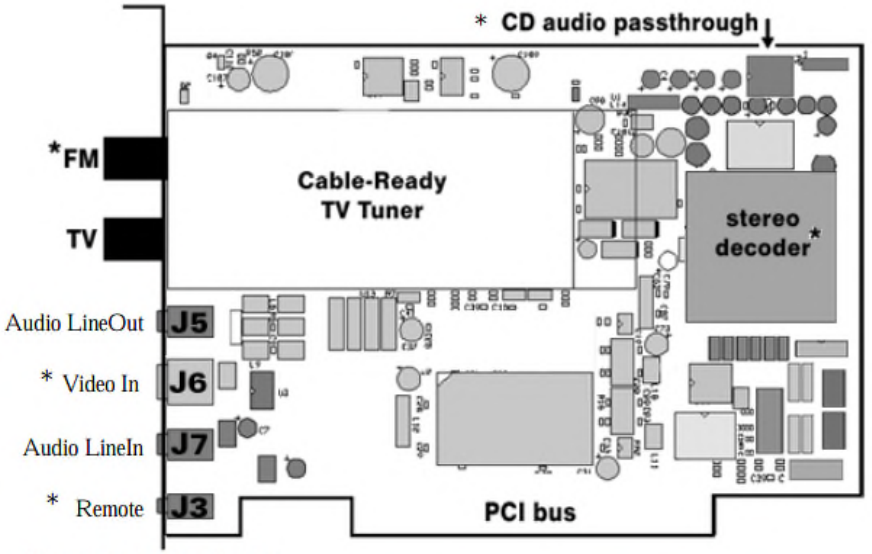

*Note: not available on all models.
Note: this outline may not reflect the current revision of your WinTV board. For the most up to date information, see the WinTV QuickInstall Guide provided with your WinTV board.

336. Accordingly, a POSITA would have found it obvious to include WinTV's television tuner card in a Horn-Baumgartner PC as taught by Baumgartner and WinTV to improve the Horn-Baumgartner device with the additional capability of capturing videos from television signals such as NTSC television signals. A POSITA would have had a reasonable expectation of success in making this combination because such combinations were known in the art and involved no more than ordinary skill.

B. Claim 20

1. [20a] The method of claim 16, further comprising: generating on screen display information,

337. Horn-Baumgartner-Candelore- render obvious the method of claim 16. §XI.B. WinTV renders this limitation obvious. WinTV discloses an on screen display generator generating on screen display information such as the title "Capture 1" for a captured video:

EX1010, p. 4-2.

2. [20b] wherein the first video information includes third video information such that, upon selection for playback,

the third video information is outputted with the on screen display information for display of the third video information and the on screen display information.

338. The Horn-Baumgartner-WinTV combination renders this limitation obvious. Horn discloses that the plurality of stored information includes third information (*e.g.*, a third image file). EX1005, FIG. 26 (showing more than 5 thumbnails). Horn discloses at 18:52-58 "organizing and retrieving images created with a digital camera and stored on the computer in individual image files," and at 19:6-16 that "a particular computer user has taken thousands of digital images with his/her digital camera, in various places, including images of various friends and family." The Horn-Baumgartner combination renders obvious video information. §§XI.A, XI.B.2.

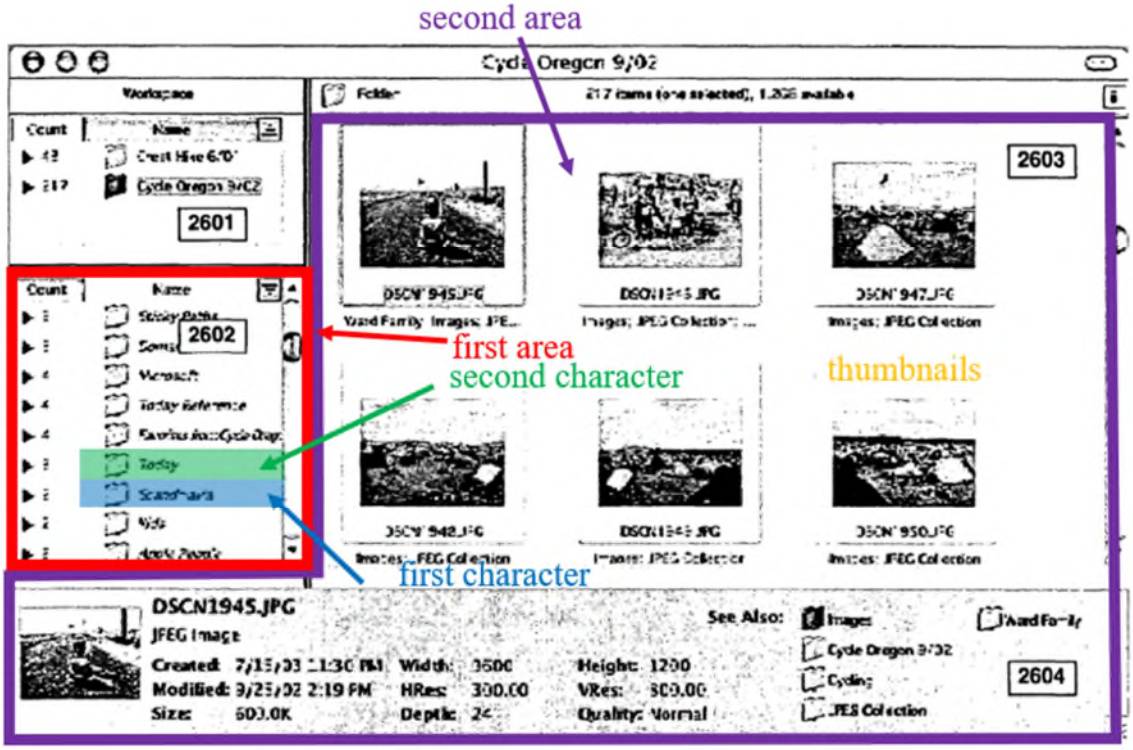

339. WinTV does as well. EX1010, p. 4-2 ("Capture 1"):

EX1010, 4-2.

C. Claim 26

1. [26a] The information processing apparatus of claim 21, further comprising: an analog to digital converter for converting analog audio information being recorded into digital audio information;

340. Horn-Baumgartner-Candelore renders obvious the apparatus of claim 21. §XI.F. WinTV renders this limitation obvious.

341. WinTV discloses that "WinTV-Capture creates a file type called *AVI (Audio/Video Interleaved)* on your hard disk. This file contains *digitized* video and, optionally, *audio*." EX1010, 4-1. WinTV discloses that it demodulates a received analog television signal and outputs the analog audio portion of that demodulated television signal to a sound card installed in the PC. EX1010, 7-1; see also 1-13 and 1-14 (discussing connection of Audio LineOut audio output of WinTV card to sound card). A sound card includes an analog-to-digital converter for converting analog audio to digital form. EX1019, 3:20-43. A POSITA would have understood from these descriptions that the demodulated TV analog audio from the WinTV card is sent to the sound card, digitized, and then stored in the AVI file together with digitized video from the WinTV card.

2. [26b] a compressor for compressing the first video information;

342. WinTV renders this limitation obvious. WinTV discloses compressing the AVI file after it has been created, including the use of Indeo, Cinepak and MPEG compression. EX1010, 4-1. A POSITA would have understood from this description in WinTV that the AVI file is compressed by the processor in the CPU configured with appropriate compression software, and MPEG (e.g., MPEG-4) compression included both video and audio compression for a combined digital compressed file. EX1020, 1:52-59; 2:58-64, FIG. 2.

3. [26c] a decoder for decoding, during playback, audio and video information included in the first video information and selected for reproduction by the user; and

343. WinTV renders this limitation obvious. WinTV discloses allowing the user to "capture and playback video clips." EX1010, pp. 4-1-4-2. The captured information may include audio as well as the video. EX1010, p. 4-5. As noted above, WinTV discloses converting analog video and audio information into digital form and compressing the digitized analog and video information for storage. §§XII.C.1, XII.C.2. A POSITA would have understood that the playback of the stored information would have involved decoding the compressed and digitized analog and video information for the information to be played back as this was standard at the time.

4. [26d] a digital to analog converter for converting at least the digital audio information into audio information during playback.

344. WinTV renders this limitation obvious. WinTV discloses allowing the user to "capture and playback video clips." EX1010, pp. 4-1-4-2. The captured information may include audio as well as the video. EX1010, p. 4-5. As noted above, WinTV discloses converting analog video and audio information into digital form and compressing the digitized analog and video information for storage. §§XII.C.1, XII.C.2. A POSITA would have understood that the playback of the stored audio information would have involved decoding it and converting it

to be played back through a sound card, speaker or other device connected to the computer. A sound card includes a digital-to-analog converter for converting digitized audio to analog audio suitable for input to a speaker. EX1019, 3:34-43.

D. Claim 27

1. [27a] The information processing apparatus of claim 21, further comprising: an on screen display generator generating on screen display information,

345. §§XI.F, XII.B.1.

2. [27b] wherein the first video information includes third video information such that, upon selection for playback, the third video information is outputted with the on screen display information for display of the third video information and the on screen display information.

346. §XII.B.2.

XIII. GROUND 8: HORN, BAUMGARTNER, CANDELORE, WINTV, CHAO

A. Motivation to Combine Chao with Horn, Baumgartner, Candelore and WinTV

347. As discussed in §IV.D, "video information" can refer to a collection of videos such as a playlist or album, and a "group of video information" information would therefore refer to a group of such collections/ playlists/albums. At the time of the '815 patent, it would have been obvious to a POSITA to further modify the combinations of Horn-Baumgartner-Candelore in Ground 6 and Horn-Baumgartner-Candelore-WinTV in Ground 7 by adding thumbnails for albums/folders of content data as taught by Chao, and a POSITA would have been

motivated to do so for the reasons discussed below. These combinations render claims 16-27 of the ’815 patent obvious for the following reasons.

348. The example of the Workspace view in Horn FIG. 22 shows the content pane 2603 including only single .jpg image objects corresponding to a collection selected in the collections pane 2602 (when modified as discussed above, the pane 2602 includes a list of user profiles):

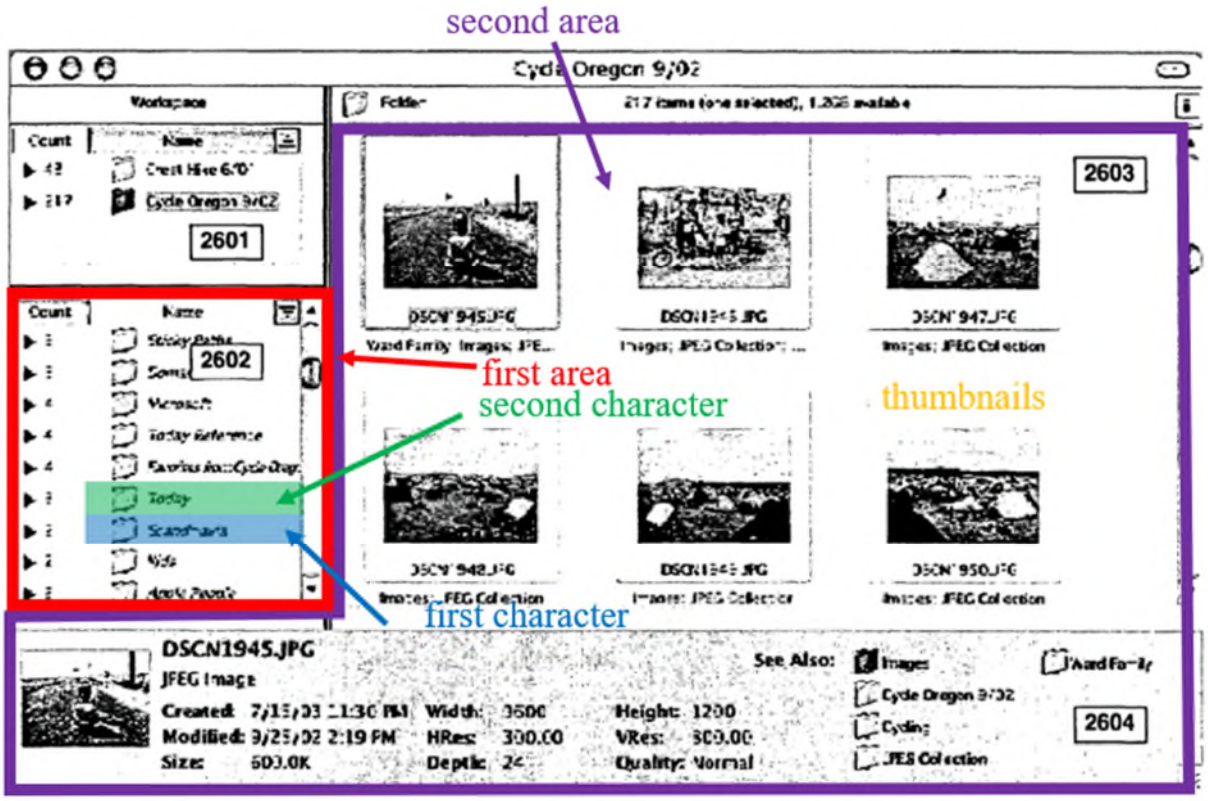

349. Horn discloses that collections can include more than just individual image objects: collections can also include containers of groups of objects, including folders. Horn discloses that a collection is a grouping of objects that is a special type of container, and that containers may contain other containers.

EX1005, 4:1-9. A folder is one type of container that may appear in a collection. This can be seen in the excerpt of FIG. 12A below, which illustrates a "Sticky Paths" representation of a collection. This image shows that a "Family" collection includes folders such as "Mia and Cam Flying 5/03" and "Mia, Cam and Chloe 5/03:

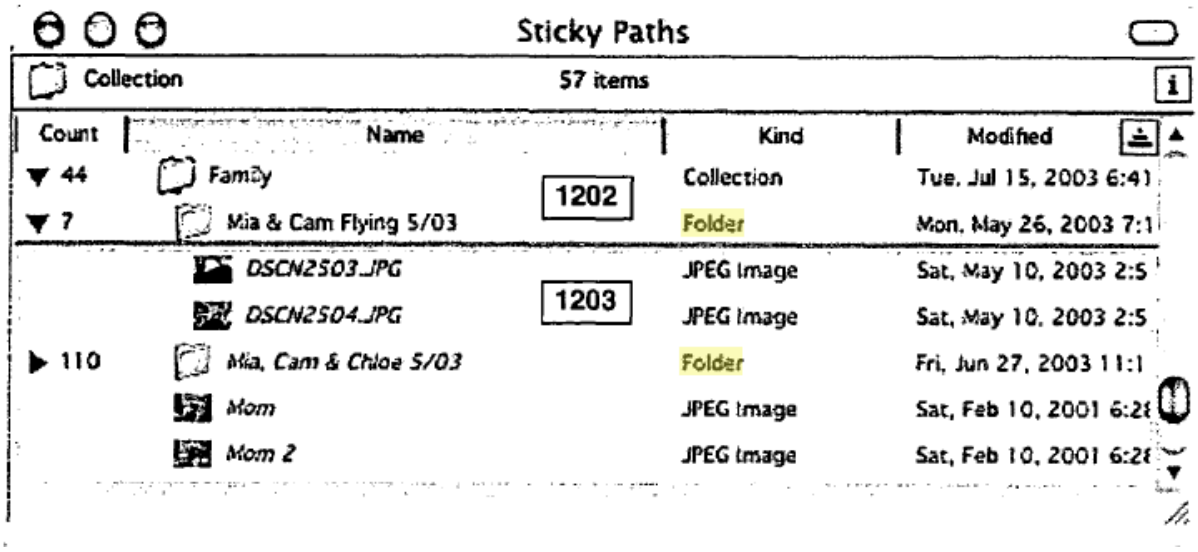

FIG. 12; *see also* the excerpt of FIG. 19 below, showing a Scandinavia collection including a "Norway 7/02" folder in addition to single image .jpg objects.

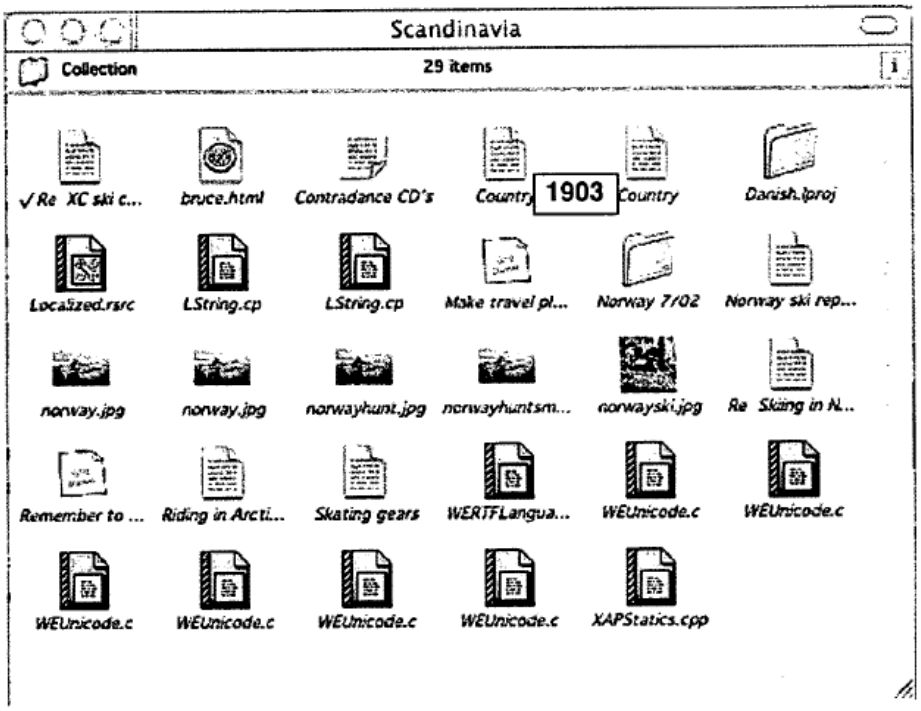

350. Accordingly, a POSITA would have understood, or at least found obvious, that such folders would be included in the content pane 2603 of FIG. 26 when a user profile including those folders is selected in the pane 2602 (which, when modified as discussed in §XI.B, displays a list of user profiles).

351. A POSITA would have further found it obvious to modify Horn's system to display a thumbnail, such as a thumbnail for an image in the folder as taught by Chao, rather than a folder icon, in the content pane 2603 of the Workspace view of FIG. 19. Chao discloses the use of thumbnails to represent both individual objects as shown in the display area 811 below, and collections as shown in the display area 810 highlighted in yellow below:

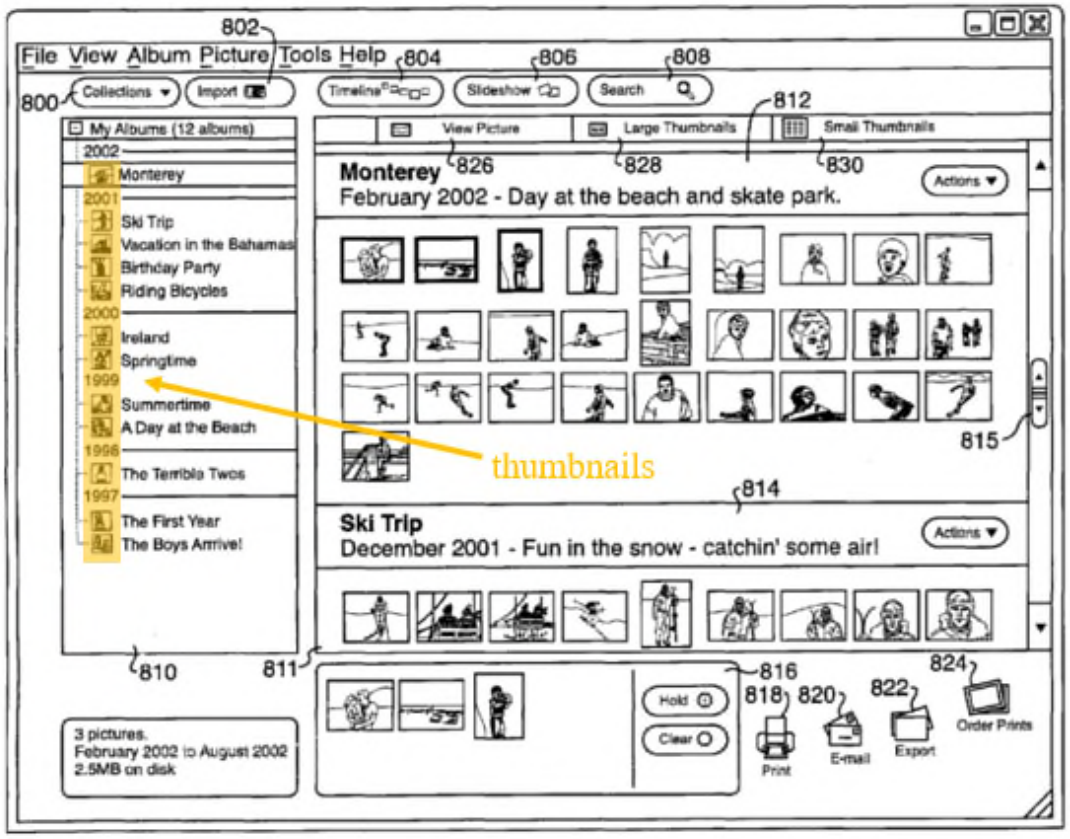

FIG. 8

352. A POSITA would have been motivated to use thumbnails to represent folders in Horn's content data organization system because Horn already teaches the use of thumbnails for individual objects. EX1005, FIG. 26, 19:25-57. A POSITA would have recognized the benefit of using thumbnails to represent folders of objects as disclosed by Chao to provide easy visual navigation for users through their collections, folders and files, as is taught by Horn. EX1005, 30:44-31:16, FIG. 26, 19:25-57. As disclosed in the references, thumbnails are commonly used in graphical user interfaces, such as file explorers and media management applications that host an extensive library of images or videos, to improve the user

experience by providing a faster and more efficient way to browse through media content. A POSITA would have understood a thumbnail could simply represent multiple objects rather than a single object—including multiple video objects.

353. Combining Chao with Horn-Baumgartner-Candelore or Horn-Baumgartner-Candelore-WinTV would simply involve applying a known technique (*i.e.*, providing thumbnails for folders of video objects) to a known device ready for improvement (the Horn-Baumgartner-Candelore or Horn-Baumgartner-Candelore-WinTV system for content management) to yield predictable results (providing thumbnails for folders of video objects, as was obvious in computing at the time). It is my understanding from counsel that this is proper rationale for an obviousness determination.

354. A POSITA would have had a reasonable expectation of success in the combination because Horn already discloses thumbnails for individual objects and characters that represent collections/folders. A POSITA thus would have had a reasonable expectation that the modification of Horn-Baumgartner-Candelore and Horn-Baumgartner-Candelore-WinTV combinations with Chao would be successful. A POSITA would have found that the teachings of Horn, Baumgartner, Candelore, and WinTV and Chao could have been predictably combined at least because of the predictability of the art of computer systems and the known interchangeability of the various elements of content management systems and

user interfaces for the same. Therefore, a POSITA would have considered it obvious to include the album/folders thumbnails of Chao in Horn-Baumgartner-Candelore and Horn-Baumgartner-Candelore-WinTV for the benefits described above.

B. Claims 16-27

355. With the substitution of Chao's thumbnails instead of Horn's folder icons to represent folders in Horn's Workspace view as exemplified in FIG. 26, the Horn-Horn-Baumgartner-Candelore-Chao combination renders obvious claims 16-19, and 21-25 for the same reasons identified for Ground 6 above, and the Horn-Baumgartner-Candelore-WinTV-Chao combination renders claims 20, 26, and 27 obvious for the same reasons identified in Ground 7 above.

XIV. GROUND 9: KAPLAN, BRYANT, WONG AND CANDELORE

A. Motivation to Combine

1. Kaplan and Bryant

356. A POSITA would have been motivated to combine the teachings of Kaplan and Bryant for at least the reasons discussed above in §IX.A.

2. Kaplan/Bryant and Wong

357. A POSITA would have also found it obvious to incorporate multiple user profiles, as taught by Wong, in the Kaplan-Bryant computer system and a POSITA would have been capable of and motivated to do so.

358. A POSITA would have been motivated to add multiple user profiles to Kaplan-Bryant's system because Bryant discloses that "[d]ifferent users can have different emotional reactions to the same image. Therefore, *to be most useful*, affective information relating to images should be associated with a particular user." EX1015, ¶32. Bryant also discloses user identifiers and thus already teaches personalizing information organization for each individual user. *Id*.

359. Further, Wong discloses an interface allowing a user to select a user profile from among a plurality of user profiles (*e.g.*, "ADMINISTRATOR," "HOWARD1"). EX1007, Abstract, 3:13-27, 4:1-5. "FIG. 3 shows an exemplary log-in access means …." EX1007, 8:14-43, FIG. 3:

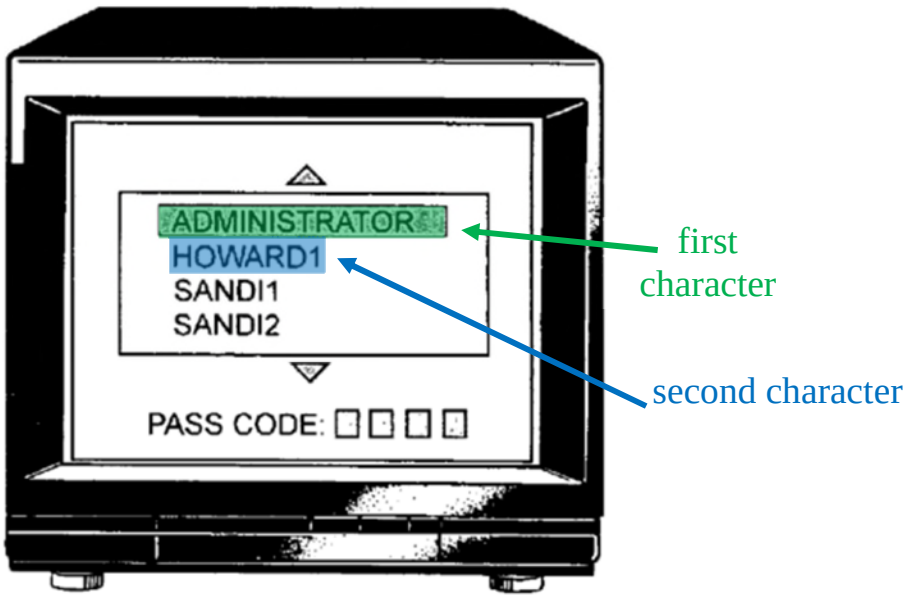

FIG. 3

360. Wong also discloses its use in PCs: "the components ... may also form an integral part of other components such as a ... ***personal computer***, or similar type device. Thus, the STB together with other associated video entertainment equipment such as televisions, PVRs, or ***personal computers*** comprise a type of customer premises equipment that may be utilized with the present invention.", EX1007, 6:53-7:25; and "[a]lternatively, ***the STB 13 may form an integral part of a conventional personal computer***," 7:43-58. *See also* EX1007, 12:30-43

361. A POSITA would have recognized the benefit to having multiple different users use Kaplan-Bryant with unique user profiles as disclosed by Wong to provide customized user collections for multiple users on a single PC. This obvious application of Kaplan-Bryant's functionality would have motivated a POSITA to make the combination. As taught by Wong, a POSITA would have found it obvious that a multimedia content management system incorporating a multiple user account system could be configured to allow multiple individualized playlists, each customized to suit the tastes of different users.

362. Combining Kaplan-Bryant with Wong would simply involve applying a known technique (*i.e.*, multiple user profiles) to a known device ready for improvement (the Kaplan-Bryant computer system for user content management) to yield predictable results (multiple user profiles for the Kaplan-Bryant system). A POSITA would have had a reasonable expectation of success in the combination

because Kaplan-Bryant already discloses and included the technology to implement customized content organization by user. A POSITA would have found that the teachings of Kaplan-Bryant and Wong could have been predictably combined at least because of the predictability of the art of computer systems and because of the known interchangeability of the various elements of content management systems and user interfaces for the same.

Candelore with Kaplan-Bryant-Wong

363. It would have been obvious to a POSITA to modify the combination of Kaplan/Bryant or Kaplan/Bryant/Wong by using encrypted content (e.g., received video information) as taught by Candelore, and a POSITA would have been motivated to do so to provide security to the video information of the Kaplan/Bryant and Kaplan/Bryant/Wong computer and methods. This would simply involve applying a known technique (*i.e.*, encrypted content) to a known device ready for improvement (the Kaplan-Bryant and Kaplan-Bryant-Wong computer systems) to yield predictable results. A POSITA would have had a reasonable expectation of success in this combination because it involved only ordinary skill and Kaplan-Bryant and Kaplan-Bryant-Wong had processors capable of performing the encryption/decryption algorithms used by Candelore.

B. Claim 16

1. [16pre] A method for reproducing video content associated with user profiles being implemented on an information processing apparatus, comprising:

364. To the extent the preamble is limiting, Kaplan discloses it. Kaplan discloses a "multimedia management system for storing, manipulating, and *displaying multimedia content*" that "comprises a user interface, a plurality of predefined functions, a multimedia acquisition interface, and system controls." EX1014, ¶4. Kaplan's system is implemented on a general-purpose computer such as a PC including software to implement Kaplan's functionality. EX1014, ¶¶2-4, 34-37.

2. [16a] receiving, via a network, first video information wirelessly from a device external to the information processing apparatus, the first video information being received including second video information that is encrypted;

365. This Kaplan-Bryant-Wong-Candelore combination renders this limitation obvious. Bryant discloses a network interface-- modem 22-- suitable for connection to the Internet. EX1015, ¶38, FIG. 1 (excerpted below):

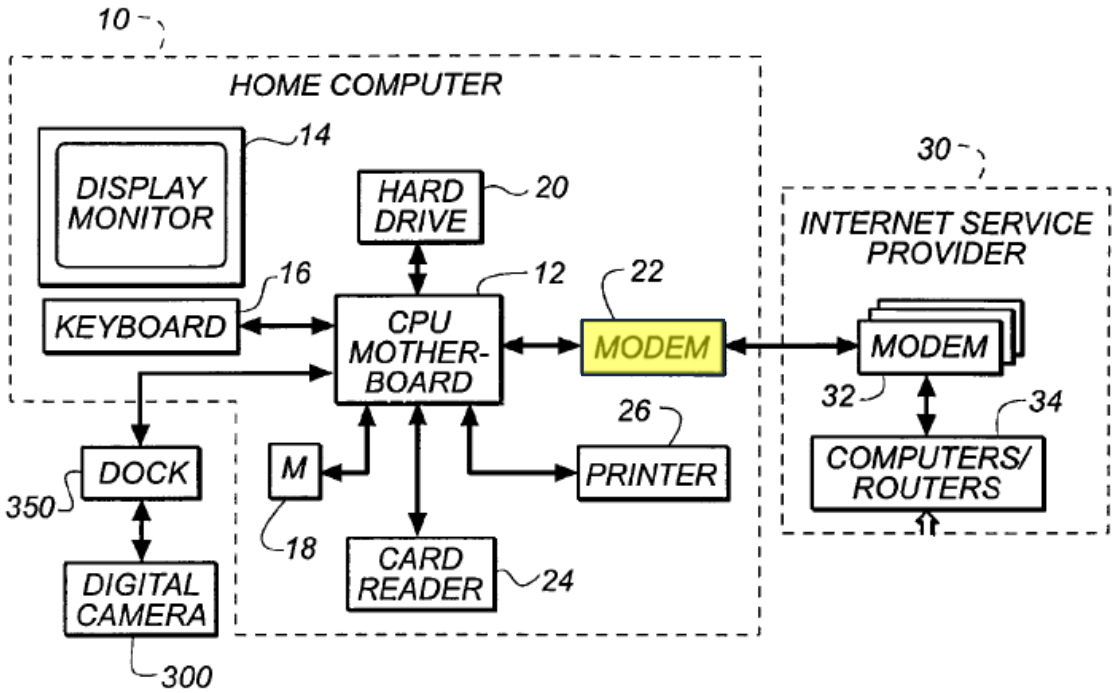

366. Bryant also discloses, in connection with digital camera 300, a wireless modem such as cellular modem or an "802.11 type" modem. EX1015, ¶140. It would have been obvious to a POSITA to modify Bryant's home computer by incorporating a wireless modem in place of modem 22 for connection to the Internet service provider. Such connection was well known to a POSITA (as disclosed in Baumgartner. EX1016, ¶54, FIG. 1). A POSITA would have been motivated to use a wireless modem to implement a wireless connection to the Internet, such as using a cellular modem or an 802.11 modem as taught by Bryant to allow the Bryant's home computer to be placed where a wired connection was unavailable, and a POSITA would have understood that the 802.11 modem could connect to a wireless router such as that used in an in-home LAN for the

connection to the Internet. A POSITA would have had a reasonable expectation of success in making this modification as the use of wireless modems was nothing more than the use of a known product for its intended purpose and involved minimal skill.

367. Kaplan discloses receiving video information via the Internet, e.g., EX1014, ¶¶3, 4, 71, as does Bryant, e.g., EX1015, ¶149. Kaplan discloses "multimedia content," EX1014, ¶¶38, 44, which is known to include digital video and audio. Ex1016, ¶38, Abstract. Bryant also discloses video information, including "motion video images." EX1015, ¶¶29, 36-38, 80-81, FIGS. 1, 3. Receiving this video information wireless via a wireless modem at the Kaplan-Bryant PC would have been obvious to a POSITA for the reasons discussed above.

368. Moreover, Candelore renders obvious including second video information that is encrypted. Candelore discloses "[a]n encryption algorithm such as DES, M6, or DVB Common Scrambling Algorithm may be used" to encrypt received control words. EX1013, ¶72. "The encrypted control word 1643 is decrypted using the unique key 1631 (or derivative thereof) to recover the control word in a clear format for descrambling and/or decrypting the encrypted content 1620 loaded into the set-top box 1610." EX1013, ¶131; *see also* ¶72 ("[t]he decrypted CW is then used by descrambler logic 470 to descramble the scrambled program content 480 and output clear program content 490."). A POSITA would

have understood that the "the encrypted content 1620 loaded into the set-top box 1610" is the encrypted second video.

3. [16b] displaying, on a display device, a first user interface for a user to select a user profile from among a plurality of user profiles including a first user profile associated with a first character and a second user profile associated with a second character,

369. Kaplan-Bryant in combination with Wong renders obvious this limitation. Kaplan's computer system includes a display. E.g., EX1014, ¶5. Similarly, Bryant's home computer includes a display monitor14 as shown in the excerpt of FIG. 1 below. EX1015, ¶38.

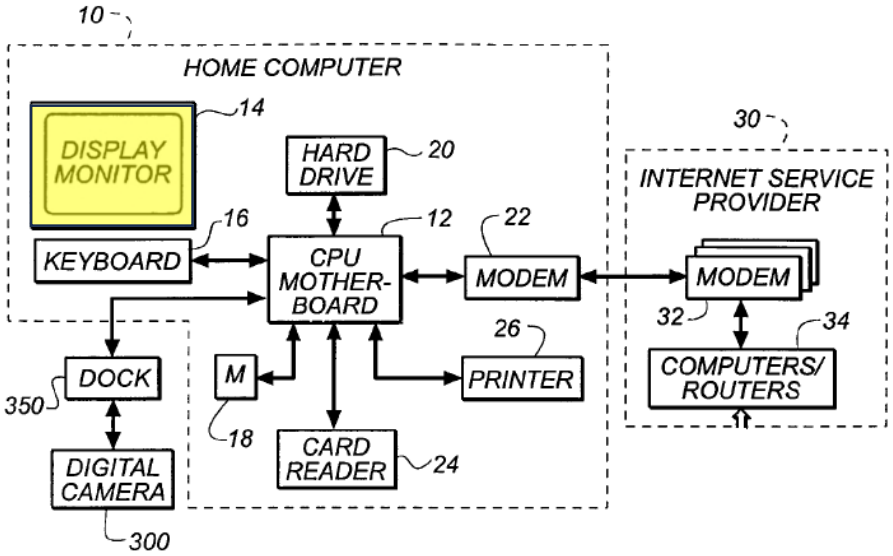

370. Bryant discloses that at least some of its information is associated with a user profile. Bryant discloses associating "affective information" with digital motion images, which is information that relates to the feelings or emotions of a person toward images." EX1015, ¶30. Bryant further discloses:

> Different users can have different emotional reactions to the same image. Therefore, to be most useful, affective information relating to images should be associated with a particular user, if the images are to be shared with various users. In some embodiments, this is accomplished by associating a user identifier with the affective information. The user identifier can be any type of information that helps enable a particular user to be identified…. The user identifier can also be a complete legal name, a nick name, a computer user name, or the like.

EX1015, ¶32. To the extent that the ’815 patent discloses this limitation, this passage in Bryant constitutes disclosure of at least some video information associated with a user profile.

371. To the extent not disclosed by Kaplan-Bryant, Wong discloses displaying a first user interface for a user to select a user profile from among a plurality of user profiles including a first user profile associated with a first character (*i.e.*, “ADMINISTRATOR,” including at least one character) and a second user profile associated with a second character (*i.e.*, “HOWARD1,” including at least one character). EX1007, Abstract, 3:13-27, 4:1-5. “FIG. 3 shows an exemplary log-in access means ….” EX1007, 8:14-43, FIG. 3:

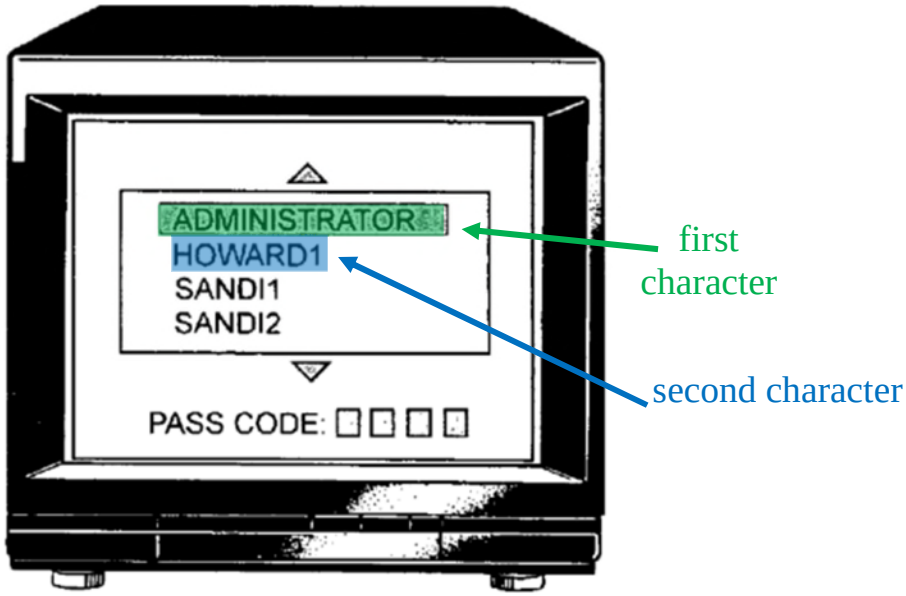

FIG. 3

372. Wong also discloses "FIGS. 7-9 are exemplary screen illustrations showing the interactive features of the user account portion of the present invention." EX1007, 4:58-60, 9:49-10:19, FIG. 7:

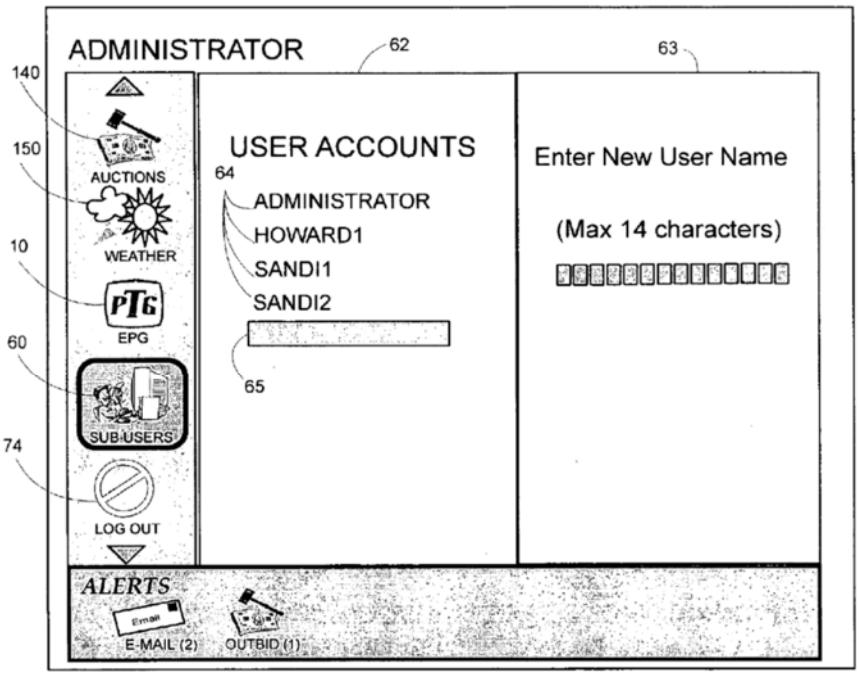

FIG. 7

373. *See also* EX1007, 10:20-52, 18:8-16, FIG. 8:

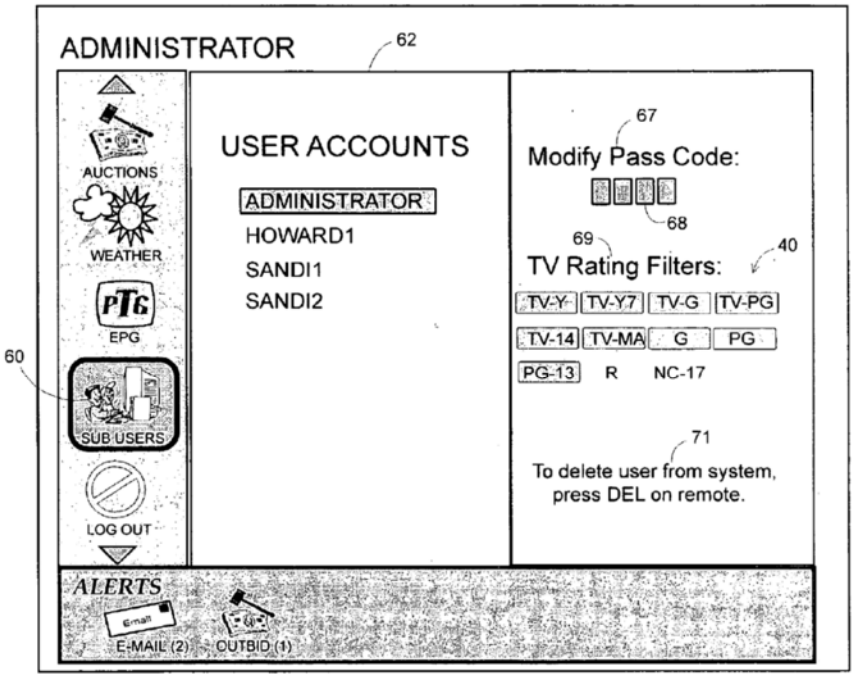

FIG. 8

EX1007, FIG. 9:

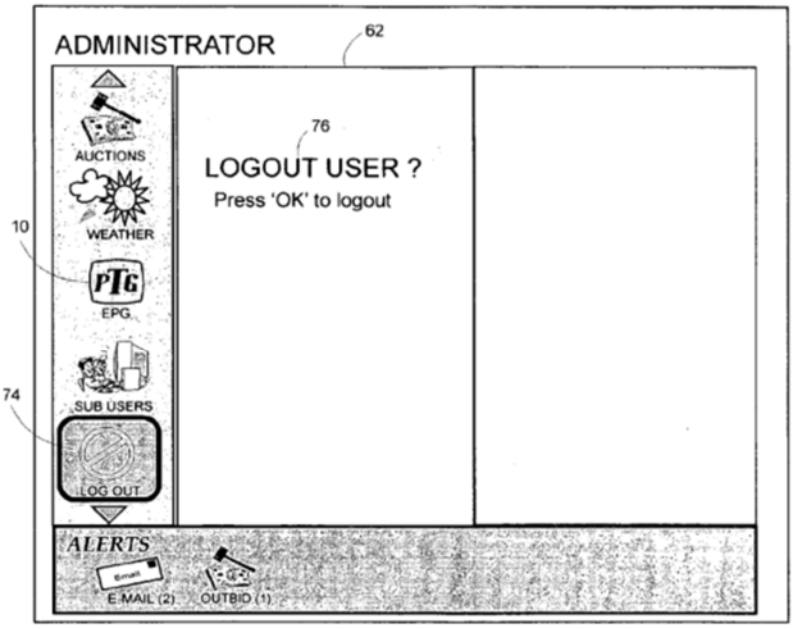

FIG. 9

4. [16c] the plurality of user profiles being associated with video information and the first user interface including an option for a user to select the first user profile from the plurality of user profiles by selecting the first character;

374. Kaplan-Bryant in combination with Wong renders this limitation obvious. §XIV.B.3[16b]. Wong discloses "one username may be alternatively highlighted by alternatively pressing the 'up', or 'down' button on the remote control device 20", 8:18-43, and "allowing each user to populate a playlist specific

to each account with media content that are suited to the instant user's tastes," 9:49-10:19.

5. [16d] receiving a selection of the first user profile;

375. Kaplan-Bryant in combination with Wong renders this limitation obvious. Wong discloses "[o]nce a proper username and associated authentication scheme is entered by a prospective user, a screen is generated by the controller on the display." EX1007, 8:18-43; *see also* 6:30-38, FIG. 3:

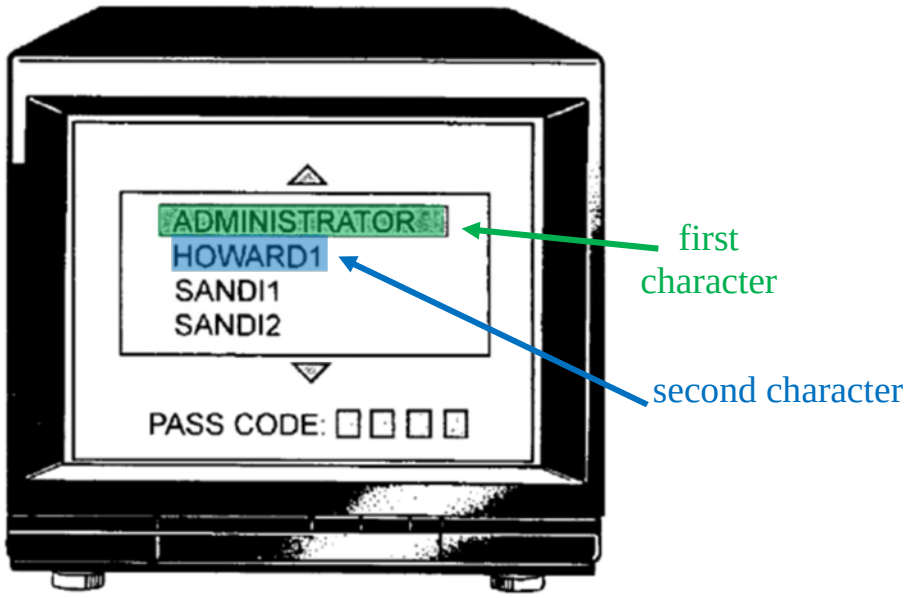

FIG. 3

376. Wong discloses "[t]he user may respond by selecting a username from the available list of active usernames followed by entry of an authentication scheme…." EX1007, 8:44-9:6, FIG. 5.

6. [16e] displaying, in response to the selection, a second user interface for a user to select desired video information to be reproduced from among the first video information,

377. Kaplan-Bryant in combination with Wong renders this limitation obvious. Wong discloses "if the entered username and authentication scheme match the stored values, a user session is begun wherein the user may access and modify various provisions of the media content modification and access system…," EX1007, 8:44-9:6, 2:52-67, and "[f]ollowing initial log-in into the user account, the 'PLAYLIST' service icon 45 is automatically actuated … providing a directory view of all media content contained in the playlist…." 9:17-38, FIG. 6:

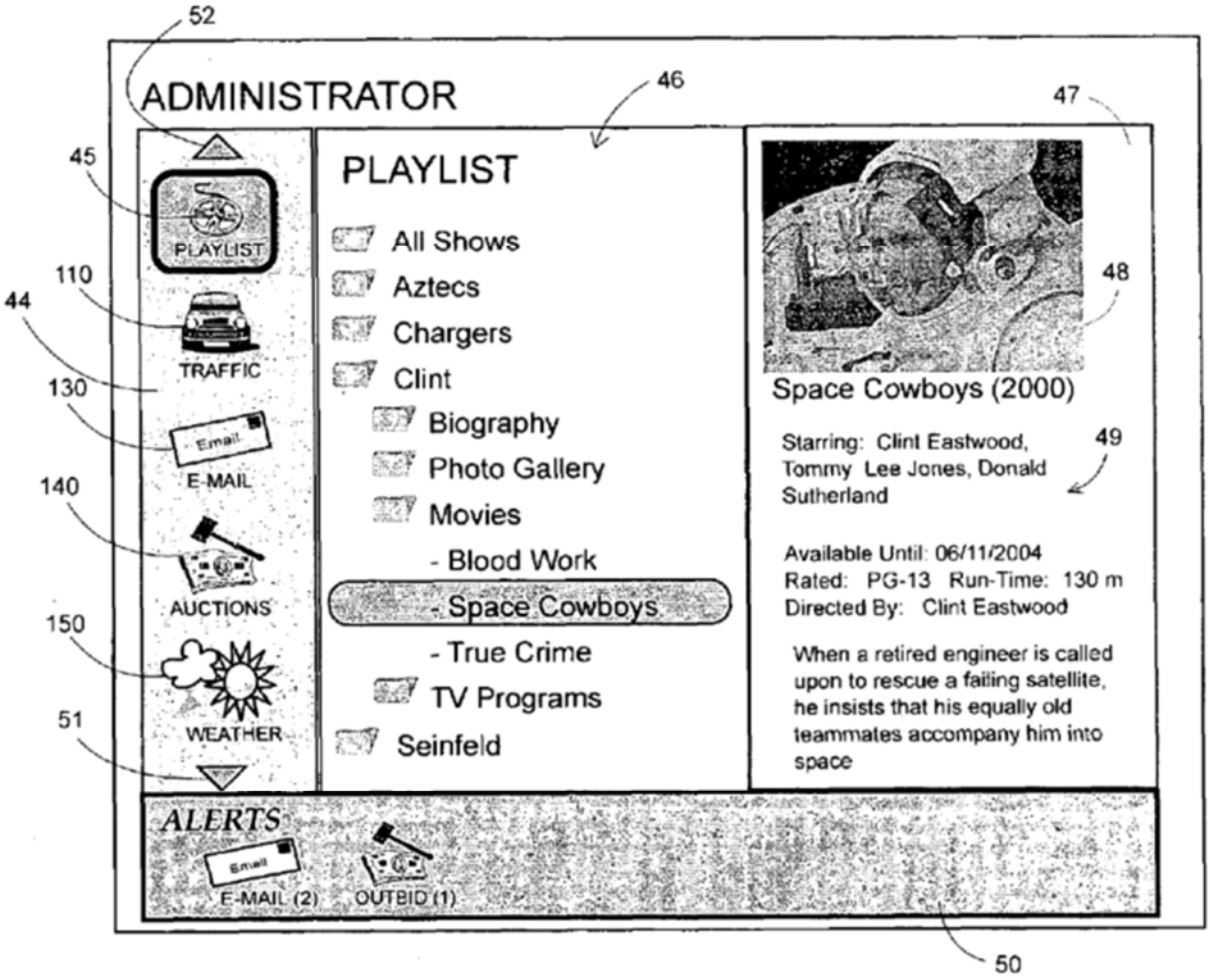

FIG. 6

378. This is consistent with Kaplan's menu display (outlined in green below) and discussed in more detail with respect to element [16f]:

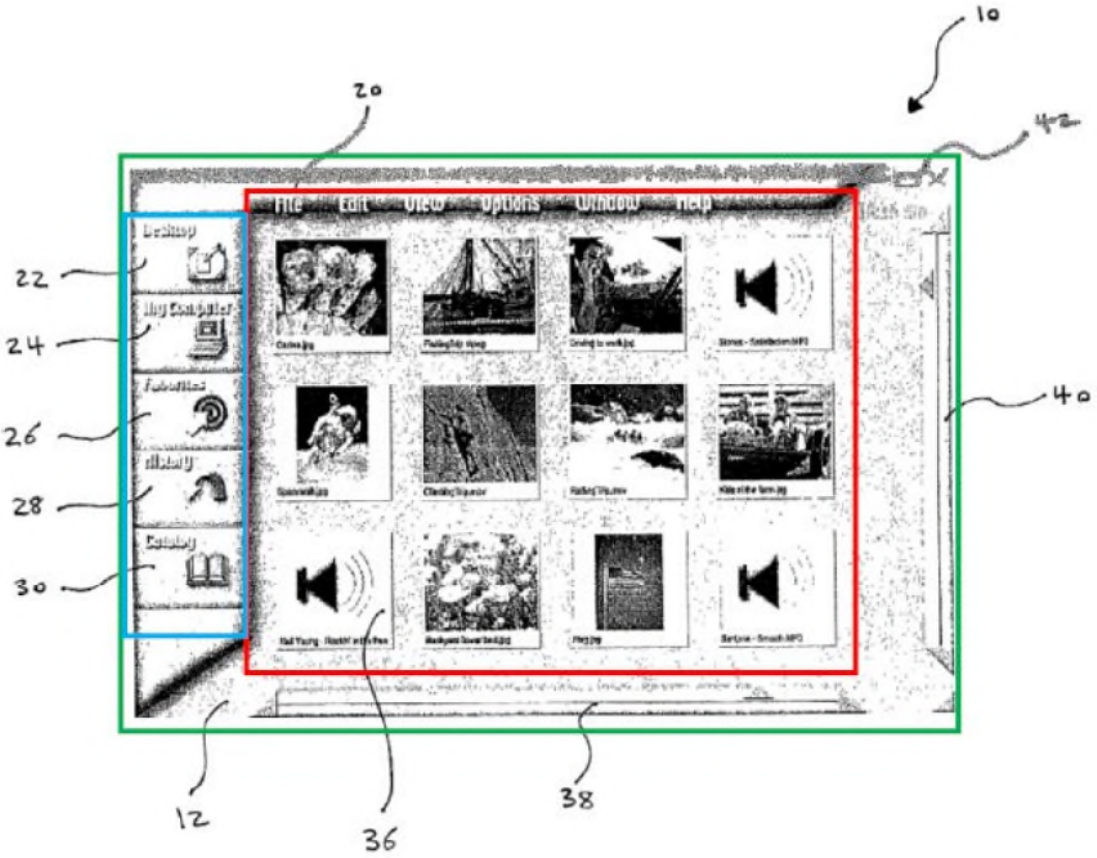

EX1014, FIG. 4. While photos are shown in the red area 54 of FIG. 4, Kaplan discloses that they can be multimedia files including videos. EX1014, ¶44.

7. [16f] the second user interface being associated with the first user profile and displaying the first character, the first character associated with a first group of video information and indicating an identity of the user of the first user profile,

379. Kaplan-Bryant in combination with Wong renders this limitation obvious. The combination renders obvious the second user interface being associated with the first user profile. §XIV.B.6[16e]. Moreover, Kaplan-Bryant discloses the first user profile and displaying the first character, the first character associated with a first group of video information and indicating an identity of the

user of the first user profile. As discussed in the IPR2018-0143 FWD, Kaplan discloses in FIG. 4 a menu display outlined in green below that includes a first area in blue. EX1014, FIG. 4; EX1009, 26.

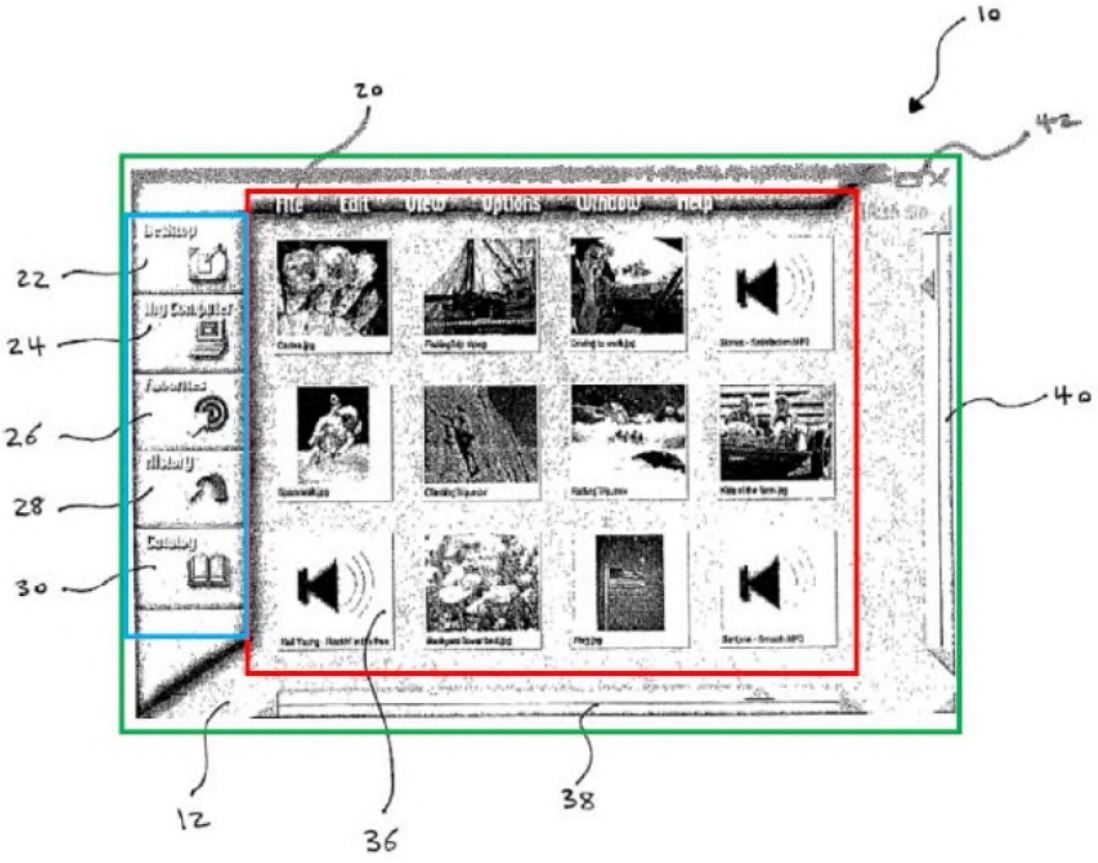

380. The first area includes a first character in the form of Favorites button 26 that includes the characters in the word "Favorites" and a bullseye icon. EX1014, ¶40; EX1009, 27-28. Favorites is a classification for a first group of objects such as videos that are represented by thumbnails because they were marked as a favorite of the user. EX1014, ¶42; EX1009, 27-28. The first area in blue in FIG. 4 also includes a second character in the form of History button 28

that includes the characters in the word "History" and a different icon. EX1014, ¶40; EX1009, 27-28. History is a classification for a second group of objects such as videos (again represented by thumbnails) that different from the first group, based on access of those objects by the user. EX1014, ¶¶42, 45; EX1009, 27-28. While photos are shown in the red area 54 of FIG. 4, Kaplan discloses that they can be multimedia files including videos. EX1014, ¶44.

381. Wong further discloses a first character associated with a first group of video information and indicating an identity of the user of the first user profile. EX1007, FIG. 6:

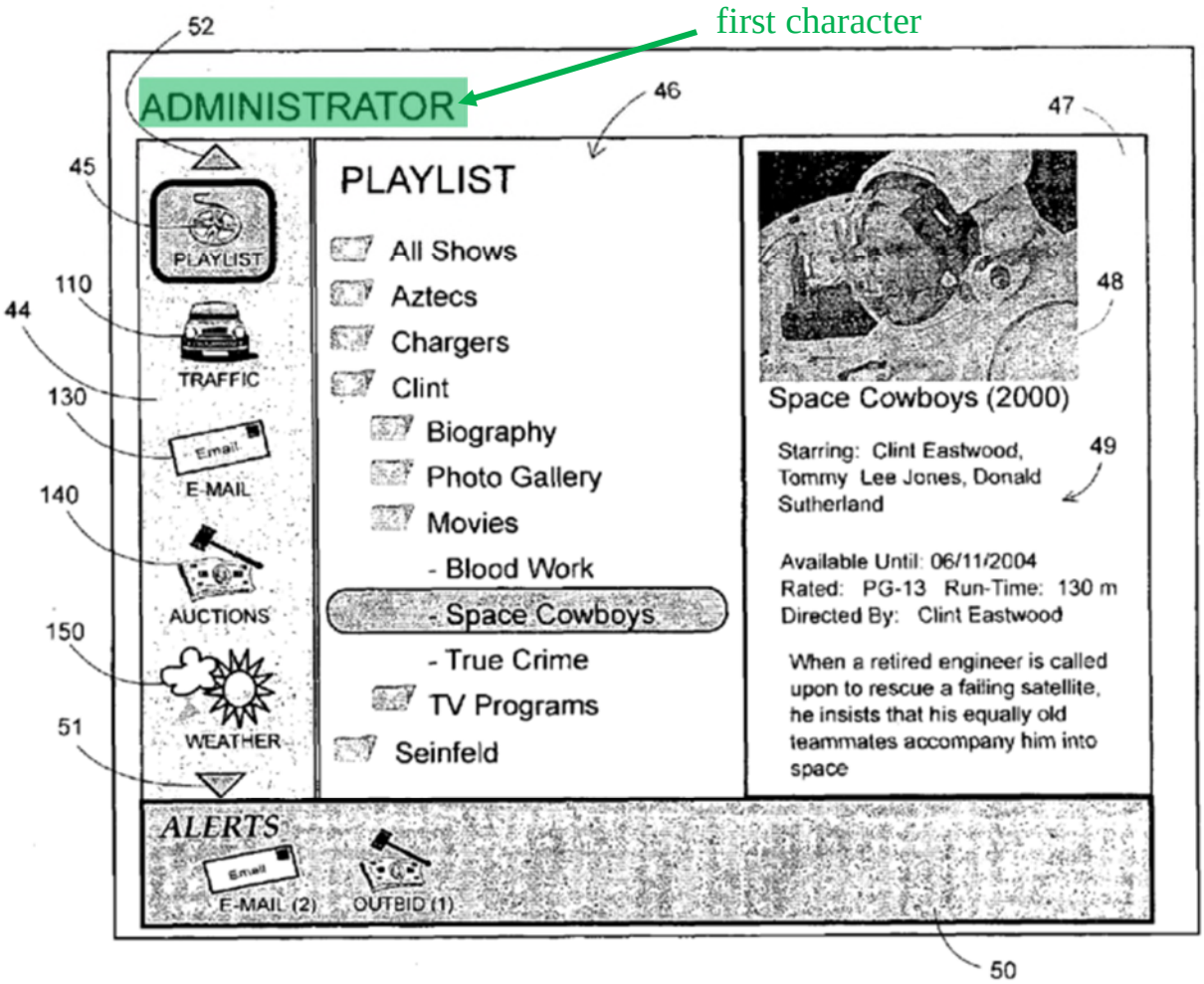

FIG. 6

8. [16g] the second user interface further displaying thumbnails corresponding to the first group of video information;

382. Kaplan-Bryant renders this limitation obvious. §XIV.B.6[16e].

Kaplan discloses a second area shown in red in the annotated version of FIG. 4 below:

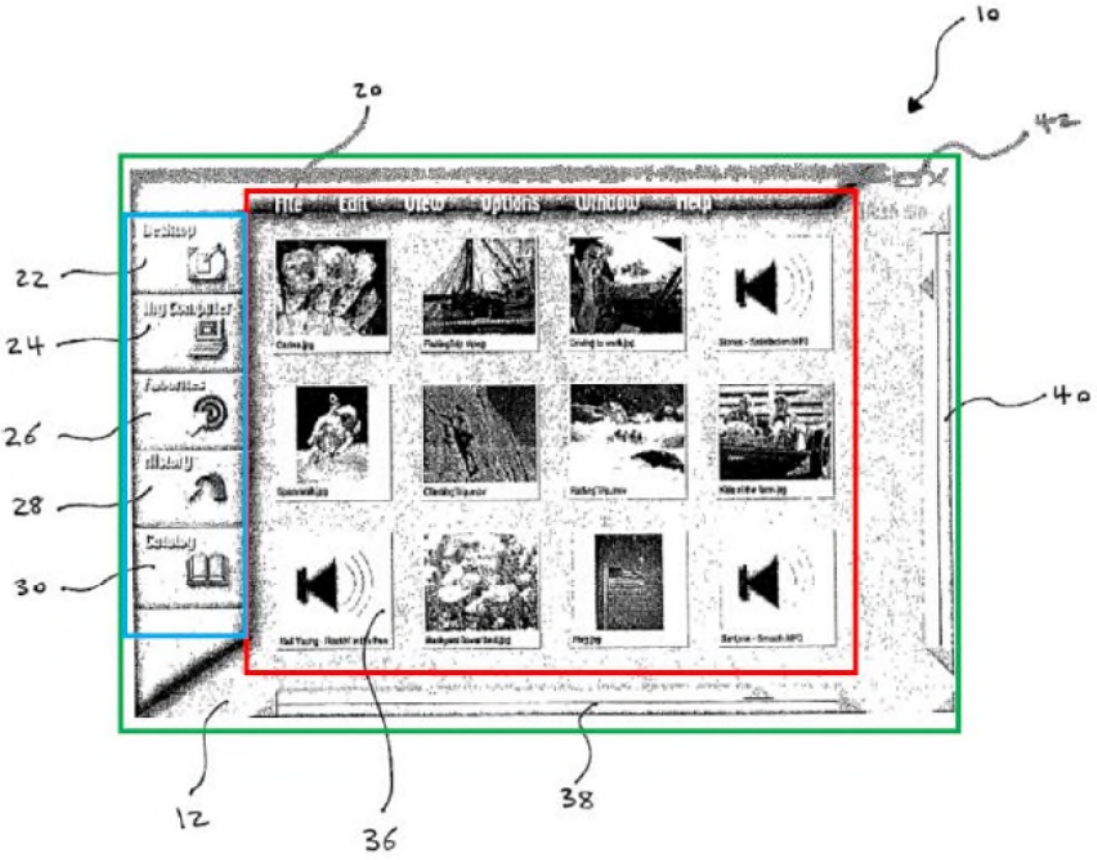

EX1014, ¶40, FIG. 4; EX1009, 29. This second area displays thumbnails corresponding to a button selected in the first area in blue. *Id.*, *see also* EX1014, ¶42, FIG. 7; see also EX1007, FIG. 6:

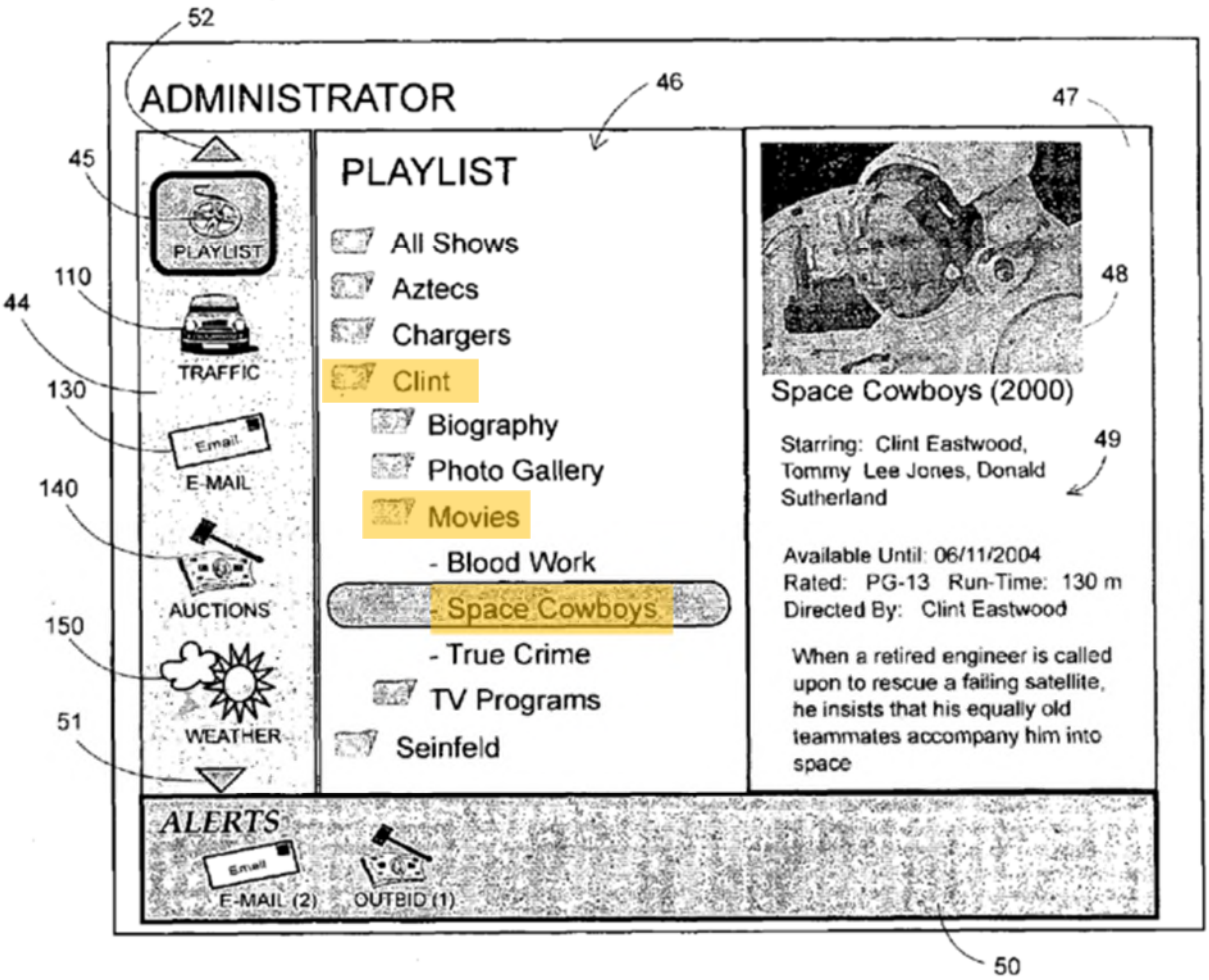

FIG. 6

383. While Wong uses text instead of a graphical thumbnail, it would have been obvious to a POSITA to substitute graphical thumbnails such as those disclosed by Kaplan discussed/illustrated above for the textual titles such as those highlighted in orange above.

9. [16h] displaying the second character and a second group of thumbnails corresponding to a second group of video

information associated with the second user profile when the second character is selected,

384. Kaplan-Bryant renders this limitation obvious. § XIV.B.3[16b], XIV.B.7[16f]. Kaplan discloses that selection of the Favorites button results in the display of a second group of objects 36-62 corresponding to the second group of "History" objects as shown in FIG. 8. EX1014, ¶45, FIG. 8; EX1009, 30. These objects in FIG. 8 are a mix of folders and individual items including a video 36 ("FishingTrip.mpeg") represented by a thumbnail. EX1014, ¶45. The choice of an icon such as the film icon on folder 56 or a thumbnail such as on folder 36 was a design choice and would have been obvious to a POSITA.

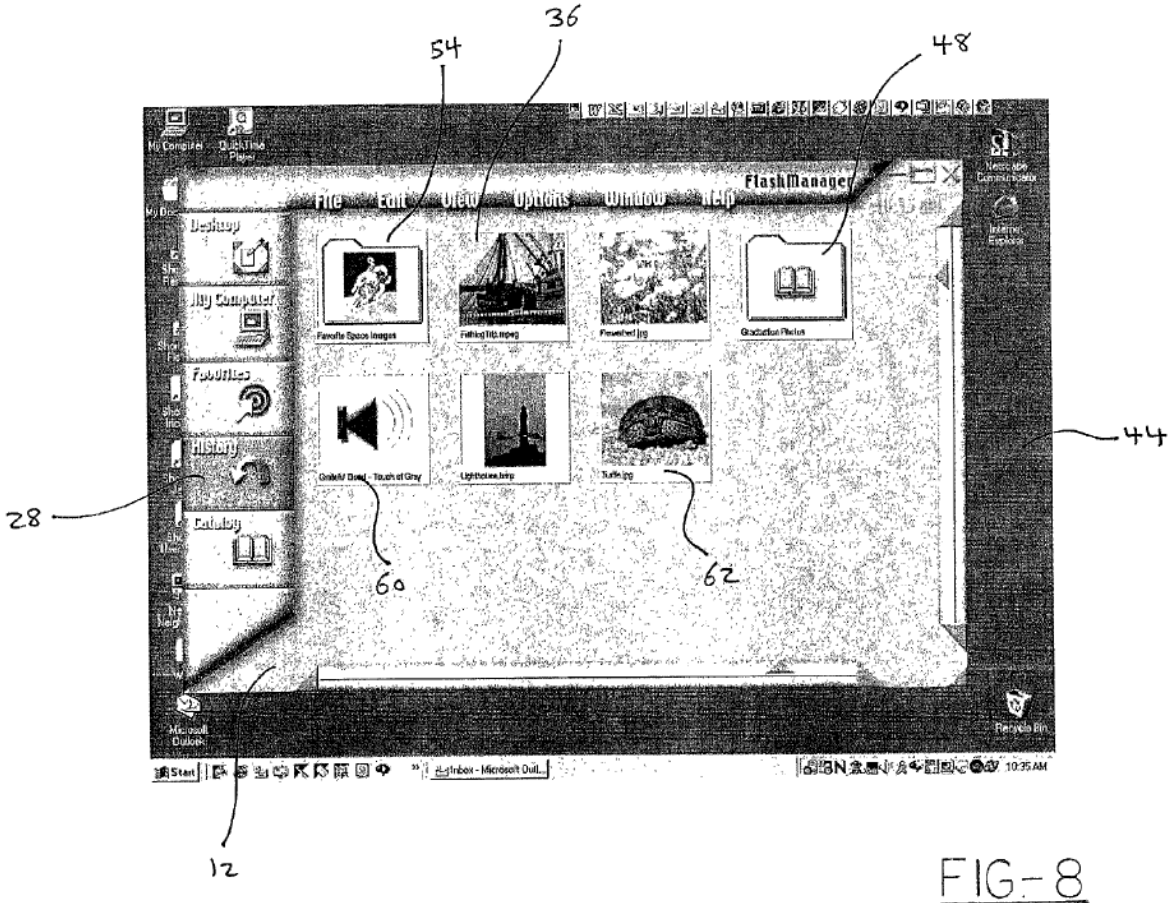

FIG-8

385. Wong further discloses "[a]lthough the foregoing description has disclosed several configuration options available to the 'Administrator' user account, it is to be understood that similar configuration options are available to other sub-users existing within the system." EX1007, 10:65-11:8; *see also* 9:17-38, 11:66-12:43, FIG. 6:

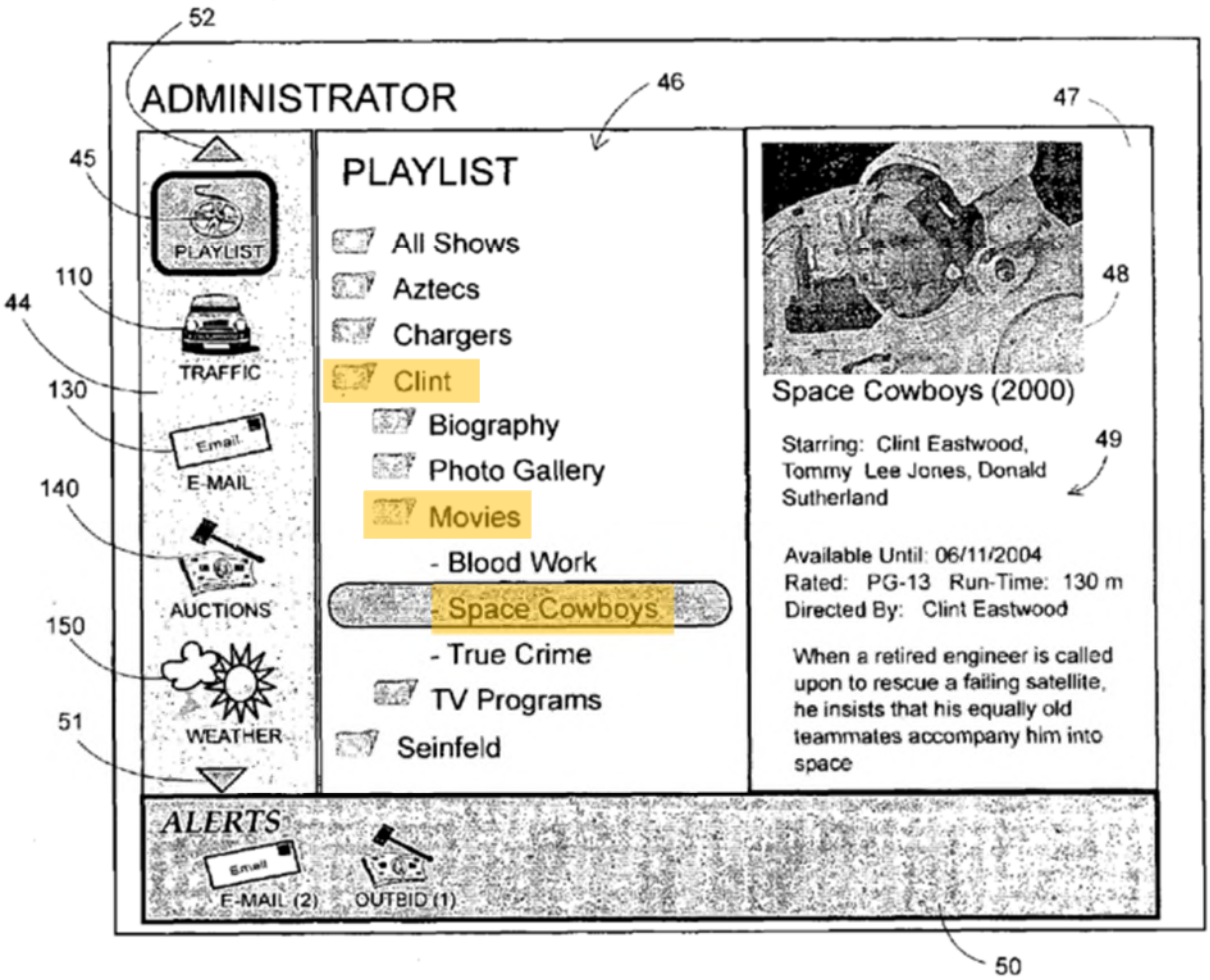

FIG. 6

386. While Wong uses text instead of a graphical thumbnail, it would have been obvious to a POSITA to replace that text with graphical thumbnails such as those disclosed by Horn FIG. 26 for the reasons set forth in limitation [16h].

10. [16i] the first group of video information and the second group of video information including one video information that is the same;

387. Kaplan renders this limitation obvious. The objects in the Favorites and History groups are the same and are part of the information stored in Kaplan's system, such as the hard drive. EX1014, ¶44.

11. [16j] receiving a selection to remove the one video information from the first group of video information associated with the first user profile;

12. [16k] removing the one video information from the first group of video information, wherein, upon the one video information being removed from the first group of video information, the one video information continues to be included in the second group of video information for the second user profile and the second group of thumbnails continues to display a thumbnail corresponding to the one video information when the second character is selected;

388. Kaplan and Bryant disclose and/or render these limitations obvious. EX1009, 31-36.

389. Kaplan discloses the use of an indexed database file and pointers to a physical file location for an object such as a video. EX1014, ¶44. These pointers allow for a single object at a physical file location to be represented as thumbnails in multiple user interface groups such as "Favorites" and "History." *Id*. As explained in Kaplan:

> To facilitate the storage and subsequent retrieval of the multimedia data files, the multimedia management system user interface provides a plurality of predefined functions to ***uniquely***

> ***index multimedia files, create an index database file, and create visual representations of the files for later retrieval.*** This function relates to a media library function of the media management system resident on a PC. ***The indexed file stores a pointer in the management system database to the physical file location, while providing a thumbnail image that can be used to represent the file in the management system user interface.*** This allows ***multiple pointers in the media management database, which relate to a single physical file stored on computer media.*** Thus, there is no need to store multiple physical files of the multimedia data, thereby saving storage space. Additionally, the media management system ***allows organization of the multimedia files into virtual albums of favorite multimedia files for easy access,*** while archiving the source material. The indexing system will automatically drop the indexing information into the library files for access.

EX1014, ¶44. This is also reflected in Kaplan's claim 20, which recites a"system for managing multimedia data files comprising a database of multimedia data files" and "a user interface having representations of the data files, wherein ***multiple representations of a data file can be presented in the user interface,*** with any representation of a data file having a pointer to a single data file stored on computer readable memory." EX1014, claim 20.

390. A POSITA would have understood from these descriptions in Kaplan that with the use of multiple pointers to a single stored file: (1) video information

recorded on a recording medium can be included in multiple groups (e.g., first and second groups); and (2), if video information is deleted from a first group (*e.g.*, classified as "Favorites"), it will continue to be included in a second group (*e.g.*, classified as "Desktop," "My Computer," "History," and/or "Catalog"). A POSITA would also have understood that a user would have expected to be able to modify groups independently by deleting the video from one group (such as its inclusion in Favorite), without removing its membership in a second group (such as Catalog). Without such a feature (which was standard), the user would not be able to control their favorites without disrupting other groups of videos.

391. To the extent that these limitations are not disclosed or obvious over Kaplan, they are disclosed or at least obvious over Bryant. EX1009, 31-35. Bryant discloses multiple collections of image objects represented by thumbnails, including "All Images," "All Favorites," and "Group" as shown in FIGS. 9A-9C:

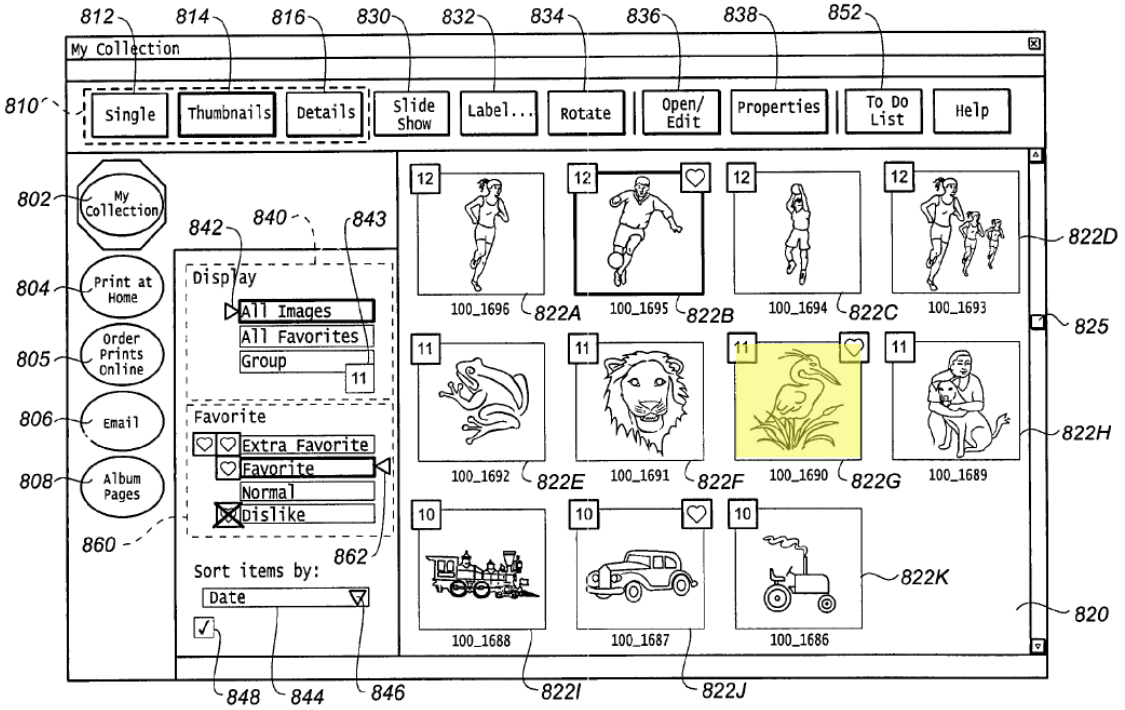
My Collection
Single
Thumbnails
Details
Slide Show
Label...
Rotate
Open/ Edit
Properties
To Do List
Help
My Collection
Print at Home
Order Prints Online
Email
Album Pages
Display
All Images
All Favorites
Group
Favorite
Extra Favorite
Favorite
Normal
Dislike
Sort items by:
Date
100_1696
100_1695
100_1694
100_1693
100_1692
100_1691
100_1690
100_1689
100_1688
100_1687
100_1686
812
814
816
830
832
834
836
838
852
810
802
804
805
806
808
842
840
843
860
862
822A
822B
822C
822D
822E
822F
822G
822H
822I
822J
822K
825
820
848
844
846

FIG. 9A

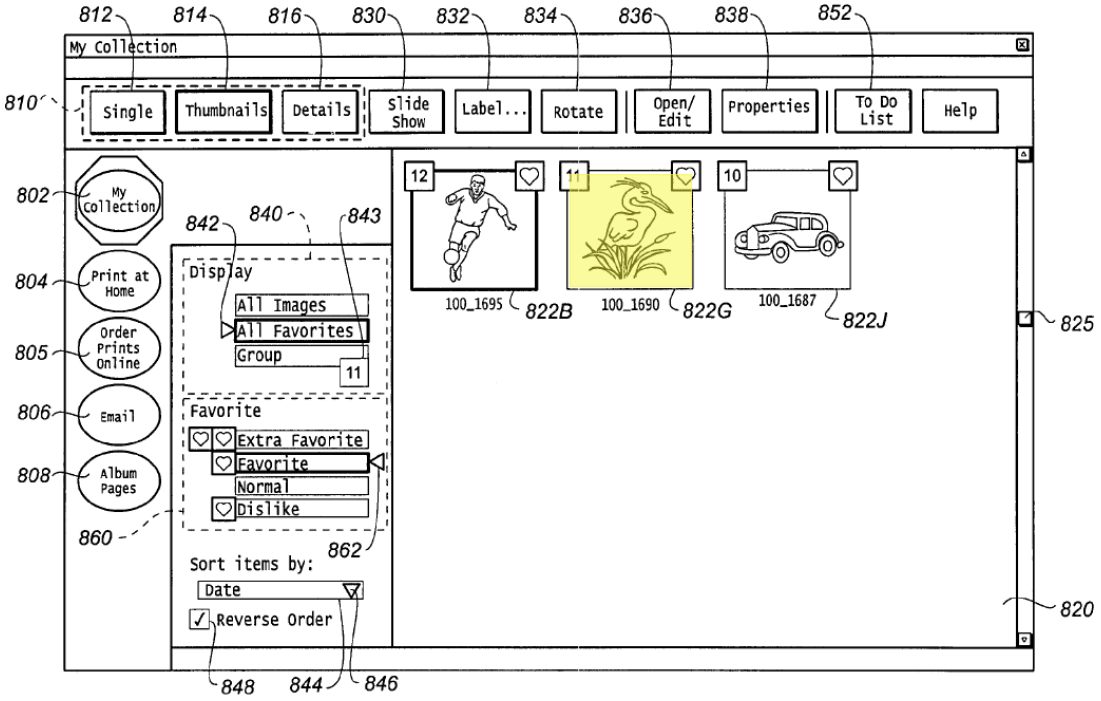
My Collection
Single
Thumbnails
Details
Slide Show
Label...
Rotate
Open/ Edit
Properties
To Do List
Help
My Collection
Print at Home
Order Prints Online
Email
Album Pages
Display
All Images
All Favorites
Group
Favorite
Extra Favorite
Favorite
Normal
Dislike
Sort items by:
Date
Reverse Order
100_1695
100_1690
100_1687
812
814
816
830
832
834
836
838
852
810
802
804
805
806
808
842
840
843
860
862
822B
822G
822J
825
820
848
844
846

FIG. 9B

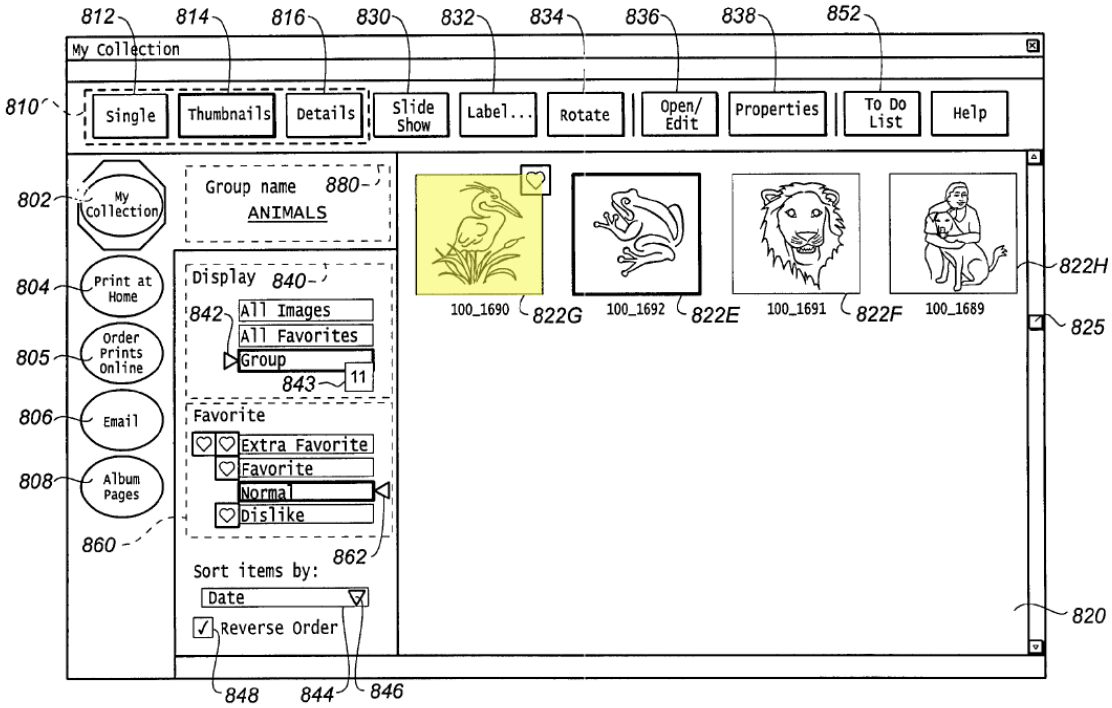

FIG. 9C

392. EX1015, ¶¶89-106. Bryant also discloses a local database with a general assets table 600 and a table of fields that correspond to each media object as shown in FIG. 8 below and described in Bryant at ¶¶82-87:

600

OBJECT 1 (100_1686)	632
OBJECT 2 (100_1687)	634
OBJECT 3 (100_1688)	636
OBJECT 4 (100_1689)	638
OBJECT 5 (100_1690)	640
OBJECT 6 (100_1691)	642
OBJECT 7 (100_1692)	644
OBJECT 8 (100_1693)	646
OBJECT 9 (100_1694)	648
OBJECT 10 (100_1695)	650
OBJECT 11 (100_1696)	652

610

FIELD (612)	TYPE (614)	EXPOSE (616)	
CAPDATE	DATE/TIME	YES	660
IMAGE CAPTION	STRING	YES	662
CLGDATE	DATE/TIME	YES	664
FAVLEVEL	INTEGER	YES	666
FILESIZE	INTEGER	YES	668
FORMAT	STRING	YES	670
GROUP NUMBER	INTEGER	YES	672
GROUP NAME	STRING	YES	674
IMGHEIGHT	INTEGER	NO	676
IMGWIDTH	INTEGER	NO	678
IMAGEPATH	STRING	NO	680
MODDATE	DATE/TIME	YES	682
IMAGENAME	STRING	YES	684
PROTECTED	INTEGER	YES	686
THMHEIGHT	INTEGER	NO	688
THMWIDTH	INTEGER	NO	690
THMNAIL	DB BLOB	NO	692

FIG. 8

393. This structure allows a media file to be simultaneously classified in multiple groups. For example, the highlighted crane image 822G is included in each of the collections in FIGS. 9A-9C. A POSITA would have recognized that Bryant discloses that if the crane media object were removed as a favorite by

changing the favorites level to "Normal" or "Dislike" as described in ¶105 of Bryant, the media object would continue to be included in the "All images" and "Group/" collections of video information. See, e.g., EX1015, ¶101. This is because a POSITA would have understood that a user would have expected to be able to modify groups independently by deleting the video from one group (such as its inclusion in All Favorites), without removing its membership in a second group (such as All Images or Group/11). If un-favoriting a video image somehow removed it from its Group (e.g., sports) or from the full catalog of images (e.g., "All Images"), that would have limited the utility of the system and caused confusion for the user. To the extent the foregoing is not implicit in Bryant, it is at least obvious over Bryant. EX1009, 31-35.

13. [16l] receiving a selection of desired video information based on a selection of a thumbnail from the first group of thumbnails, the desired video information included in the second video information;

394. Kaplan-Bryant renders this limitation obvious. § XIV.B.3[16b], XIV.B.7[16f]. Kaplan discloses a second area (red) in FIG. 4:

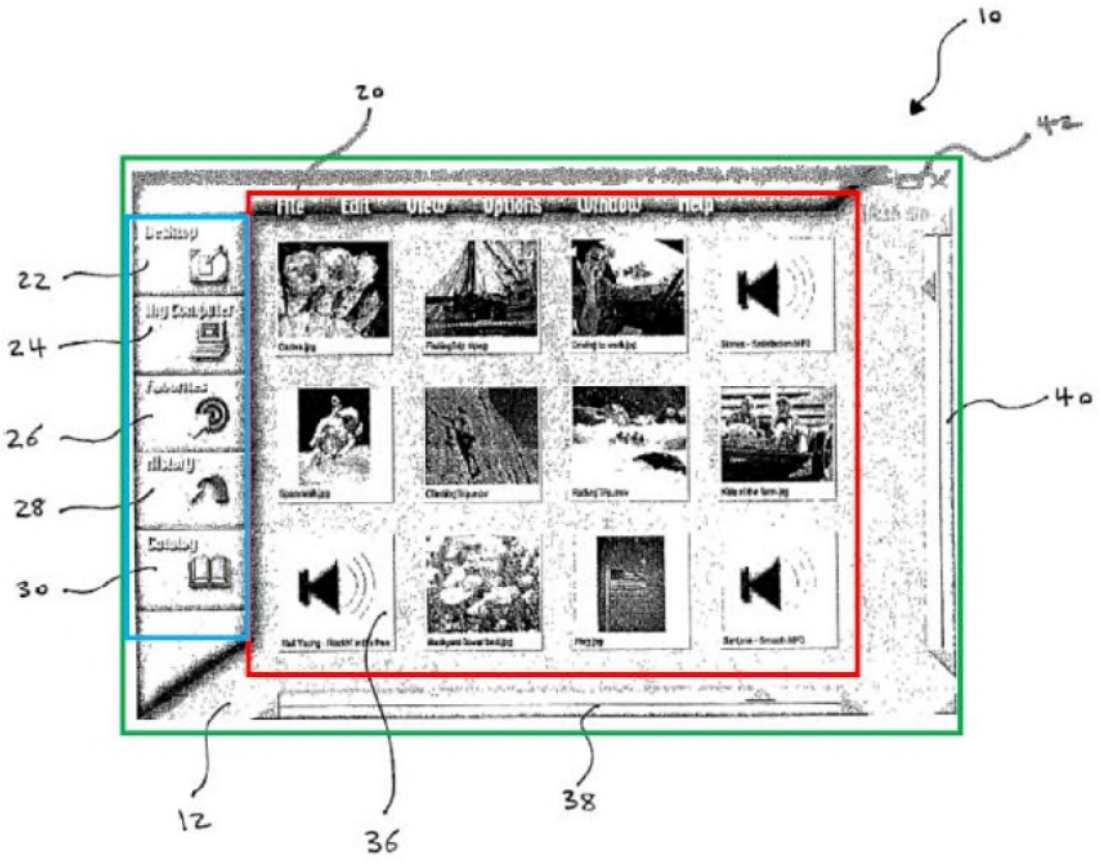

EX1014, ¶40, FIG. 4; EX1009, 29. This second area displays thumbnails corresponding to a button selected in the first area (blue). *Id.*, *see also* EX1014, ¶42, FIG. 7.

395. Kaplan discloses "multimedia content," EX1014, ¶¶38, 44, known to include digital video and audio. EX1016, ¶38, Abstract. Bryant also discloses video information, including "motion video images." EX1015, ¶¶29, 36-38, 80-81, FIGS. 1, 3. A POSITA would have understood that user selection of desired video information from either Kaplan-Bryant would occur based on a selection of a thumbnail. Moreover, the selection would also result in the playback of the video.

14. [16m] decrypting video information corresponding to the selected thumbnail; and displaying the decrypted video information.

396. Kaplan-Bryant-Wong in combination with Candelore renders this limitation obvious.§ XIV.B.2; EX1013, ¶¶72, 131.

C. Claim 17. The method of claim 16, wherein any user can delete stored video information regardless of a user profile from the plurality of user profiles that was used to record the stored video information.

397. Kaplan-Bryant-Wong-Candelore render obvious the method of claim 16. § XIV.B. Wong renders this limitation obvious. Wong discloses configuration options available to the administrator and sub-user accounts, including parental control mechanisms that "'lock out' certain forms of questionable or controversial media content" and prohibit users from viewing such content. EX1007, 9:49-11:8, 3:13-27, FIG. 8. A POSITA would understand that setting a parental control for other users would result in the deletion of stored video information (media content pointers) for prohibited content.

D. Claim 18. The method of claim 16, further comprising: generating a list of video information based on preferences of a user determined by a user selections of thumbnails from the first or second group of thumbnails.

398. Kaplan-Bryant-Wong-Candelore renders obvious the method of claim 16. § XIV.B. Kaplan-Bryant renders this limitation obvious. Kaplan discloses a "History" group, which is second group of objects such as videos based on prior access of those objects by the user. When a user selects this group by pressing the

History button 28, thumbnails for only those objects that have been previously accessed by the user are displayed (FIG. 8). EX1014, ¶¶42, 45; EX1009, 27-28.

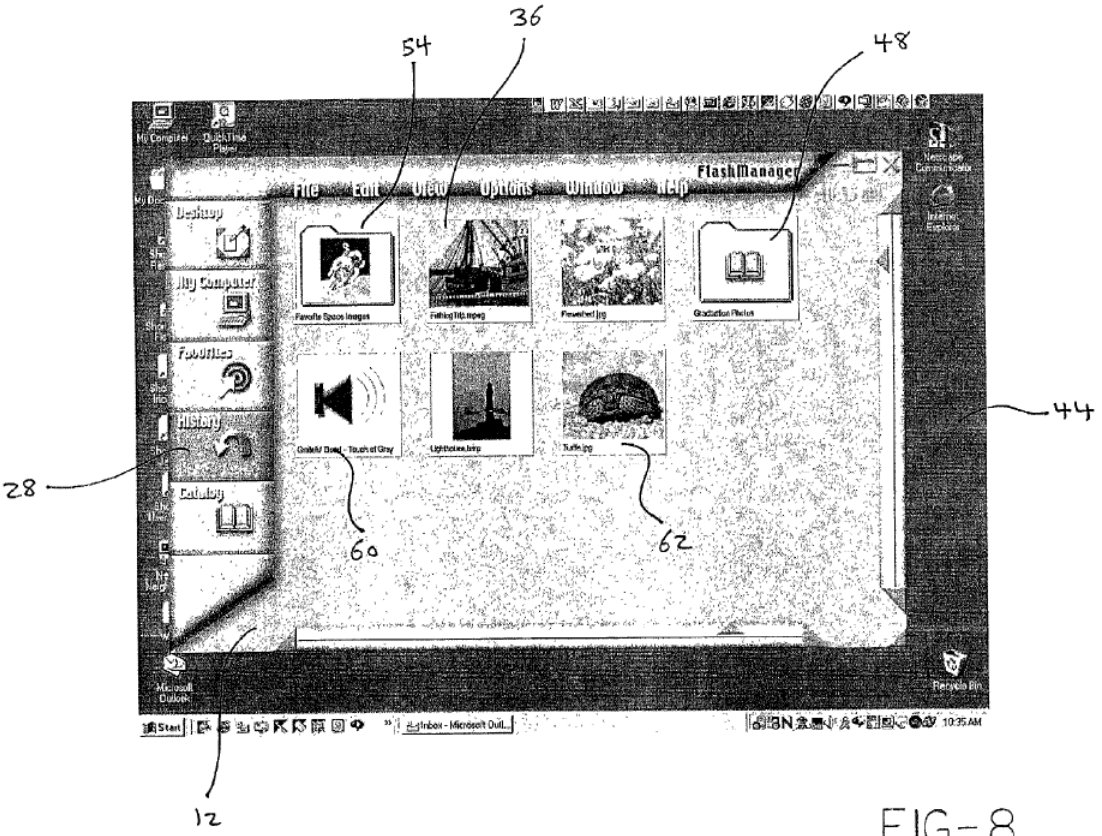

FIG-8

E. Claim 19

1. [19a] The method of claim 16, further comprising: generating a list of video information based on preferences of a user determined by a user selections of thumbnails associated with the first video information, the list including third video information;

399. Kaplan-Bryant-Wong-Candelore render obvious the method of claim 16. § XIV.B. Kaplan-Bryant discloses third video information. EX1005, 18:52-58; 19:6-16; § XIV.A. Kaplan-Bryant renders this limitation obvious. § XIV.D.

2. [19b] receiving a selection of the list by the user; and in response to the selection of the list, displaying the thumbnails that correspond to the third video information and no other thumbnails associated with video information of other users.

400. Kaplan-Bryant renders this limitation obvious. § XIV.D.

F. Claim 21

1. [21pre] An information processing apparatus comprising:

401. To the extent the preamble is limiting, Kaplan discloses an information processing apparatus. § XIV.B.1. Kaplan's system is implemented on a general-purpose computer such as a PC including software to implement the functionality disclosed in Kaplan. EX1014, ¶¶2-4, 34-37. Bryant similarly discloses a "home computer" 10, which a POSITA would recognize as a PC. EX1015, ¶37, FIG. 1:

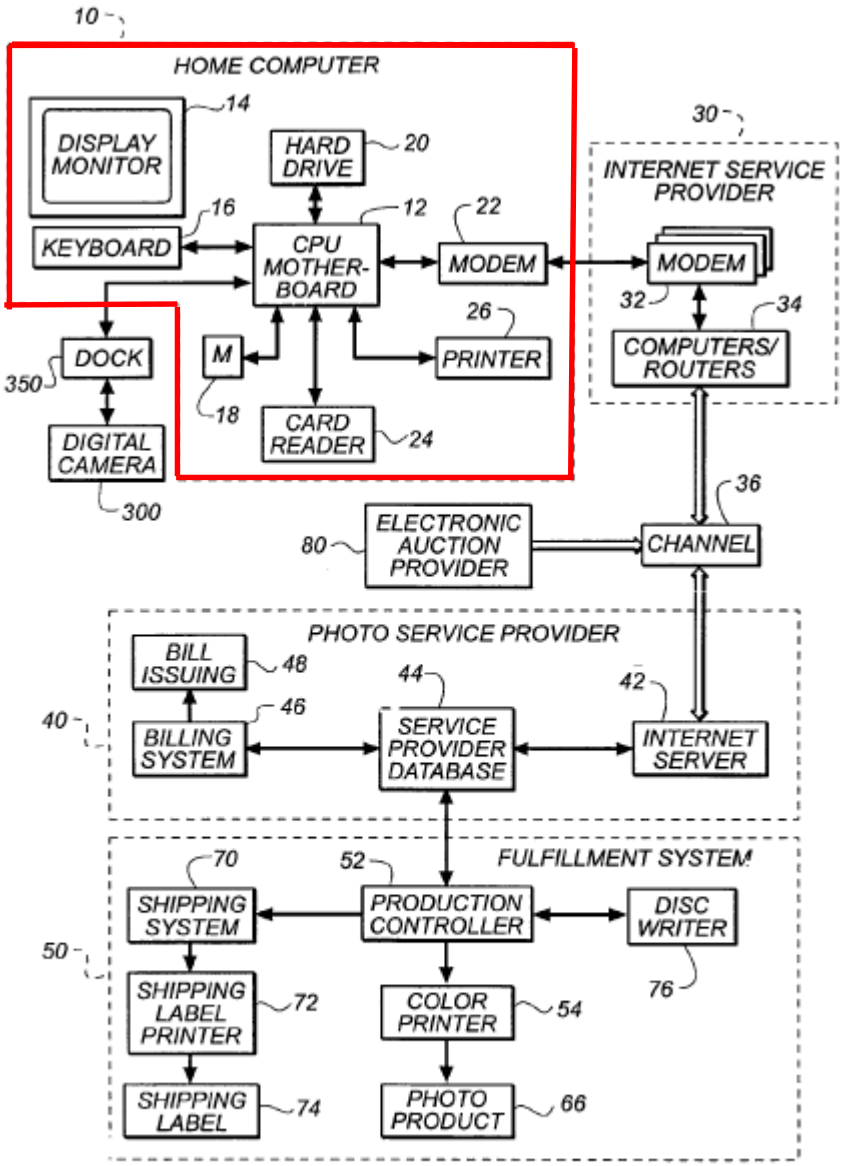

FIG. 1

2. [21a] a network interface receiving first video information wirelessly from a device external to the information processing apparatus, the first video information being received including second video information that is encrypted;

402. § XIV.B.2.

3. [21b] a display displaying a first user interface for a user to select a user profile from among a plurality of user profiles including a first user profile associated with a first character and a second user profile associated with a second character,

403. § XIV.B.3.

4. [21c] the plurality of user profiles being associated with video information and the first user interface including an option for a user to select the first user profile from the plurality of user profiles by selecting the first character;

404. § XIV.B.4.

5. [21d] an input interface receiving a selection of the first user profile at a first time and a selection of the second character at a second time,

405. § XIV.B.5.

6. [21e] wherein, in response to the selection of the first user profile, the display displays a second user interface for a user to select desired video information to be reproduced from among the first video information,

406. §§ XIV.B.5, XIV.B.6.

7. [21f] the second user interface being associated with the first user profile and displaying the first character, the first character associated with a first group of video information and indicating an identity of the user which the first user profile is associated with,

407. § XIV.B.7.

8. [21g] the second user interface further displaying thumbnails corresponding to the first group of video information, and

408. § XIV.B.8.

9. [21h] wherein, in response to the selection of the second user profile, the display displays the second character and a second group of thumbnails corresponding to a second group of video information associated with the second user profile when the second character is selected,

409. § XIV.B.9.

10. [21i] the first group of video information and the second group of video information including one video information that is the same; and

410. § XIV.B.10.

11. [21j] a processor for removing one video information from the first group of video information after the input interface receives a selection to remove the one video information from the first group of video information associated with the first user profile,

12. [21k] wherein, upon the one video information being removed from the first group of video information, the one video information continues to be included in the second group of video information for the second user profile and the second group of thumbnails continues to display a thumbnail corresponding to the one video information when the second character is selected,

411. §§ XIV.B.11, XIV.B.12, XIV.F.5.

13. [21l] wherein the processor decrypts second video information corresponding to a selected thumbnail when the input interface receives a selection of desired video information based on a selection of a thumbnail from the first group of thumbnails, and

412. §§ XIV.B.13, XIV.B.14.

14. [21m] wherein the display displays the decrypted video information.

413. § XIV.B.14.

G. Claim 22. The information processing apparatus of claim 21, further comprising: an antenna for wirelessly receiving the first video information.

414. Kaplan-Bryant-Wong-Candelore renders obvious claim 21, including the use of a wireless modem as discussed for limitation [16a]. §§XIV.B, XIV.F. A POSITA would have understood or found it obvious to use an antenna for such a wireless modem because the use of antennas for wireless connections was ubiquitous. See, e.g., EX1018.

H. Claim 23. The information processing apparatus of claim 21, wherein any user can delete stored video information regardless of a user profile from the plurality of user profiles that was used to record the stored video information.

415. Kaplan-Bryant-Wong-Candelore renders obvious the information processing apparatus of claim 21. § XIV.F. Wong renders this limitation obvious. § XIV.C.

I. Claim 24. The information processing apparatus of claim 21, wherein the processor generates a list of video information based on preferences of a user determined by a user selections of thumbnails from the first or second group of thumbnails.

416. Kaplan-Bryant-Wong-Candelore renders obvious the information processing apparatus of claim 21. § XIV.F. Wong renders this limitation obvious. § XIV.D.

J. Claim 25

1. [25a] The information processing apparatus of claim 21, wherein the processor generates a list of video information based on preferences of a user determined by a user selections of thumbnails associated with the first video information, the list including third and fourth video information, and,

417. Kaplan-Bryant-Wong-Candelore renders obvious the information processing apparatus of claim 21. § XIV.F. Kaplan-Bryant renders this limitation obvious. § XIV.E.1. Kaplan discloses that multiple instances of video information, including individual videos and collections of videos, can be recorded (e.g., stored on a hard disk of the computer) in Kaplan's system as shown in FIGS. 7 and 8. These instances are the claimed third and fourth video information, and they are displayed using thumbnail representations in the user interfaces shown in FIGS. 7 and 8.

2. [25b] in response to the input interface receiving a selection of the list by the user, the display displays only those thumbnails that correspond to the third and fourth video information and no other thumbnails associated with video information of other users.

418. Kaplan-Bryant renders this limitation obvious. § XIV.E.2, § XIV.J.1.

XV. GROUND 10: KAPLAN, BRYANT, WONG, CANDELORE AND WINTV

A. Motivation to Combine WinTV with the Kaplan-Bryant-Wong-Candelore Combination

419. Kaplan's system is implemented on a general-purpose computer such as a PC including software to implement the functionality disclosed in Kaplan. EX1014, ¶¶2-4, 34-37. Bryant similarly discloses a "home computer" 10, which a POSITA would recognize as a PC. EX1015, ¶37. WinTV discloses a WinTV television tuner card and associated software configured for installation in a PC such as those disclosed in Kaplan and Bryant. EX1010 at 1-2:

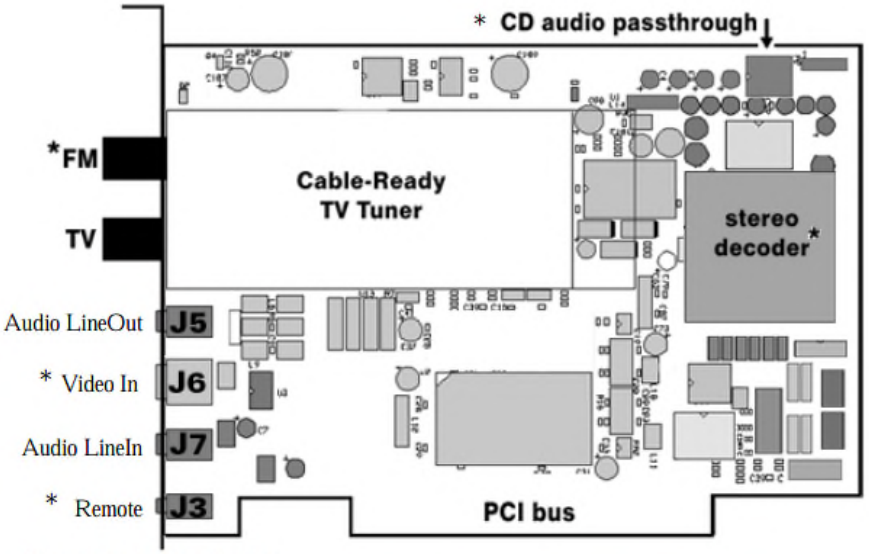

*Note: not available on all models.
Note: this outline may not reflect the current revision of your WinTV board. For the most up to date information, see the WinTV QuickInstall Guide provided with your WinTV board.

420. Accordingly, a POSITA would have found it obvious to include WinTV's television tuner card in a Kaplan-Bryant or Kaplan-Bryant-Wong-Candelore PC as taught by WinTV to improve the Kaplan-Bryant or Kaplan-

Bryant-Wong-Candelore device with the additional capability of capturing videos from television signals such as NTSC television signals. A POSITA would have had a reasonable expectation of success in making this combination because such combinations were known in the art and involved no more than ordinary skill.

B. Claims 20, 26, 27

421. A Kaplan-Bryant-Wong-Candelore PC including a WinTV card renders obvious claims 20, 26 and 27 for the same reasons the Horn-Baumgartner-Candelore-WinTV combination renders those claims obvious as discussed above in Ground 7.

XVI. SECONDARY CONSIDERATIONS

422. At this time, I am not aware of any objective evidence (or "secondary considerations") that would suggest the Challenged Claims are not obvious. For example, I am not aware of any evidence relating the purported invention to any commercial success, evidence of a long-felt need that was solved by the purported invention, evidence that others have copied the purported invention, failure of others facing the same state of the art to develop a satisfactory solution, professional approval or skepticism, or evidence that the purported invention achieved a surprising result. It is my opinion that all Challenged Claims would have been obvious to one of skill in the art.

423. I understand that if Patent Owner argues that objective evidence supports a finding of non-obviousness, I may be asked to review such evidence and formulate an opinion in response to Patent Owner's arguments. I reserve my right to do so.

XVII. CONCLUSION

424. The foregoing represents my opinion to date but as discussed above I reserve the right to supplement my opinion if, among other things, further evidence or information becomes available.

425. In signing the front cover of this declaration, I understand that the declaration will be filed as evidence in a contested case before the Patent Trial and Appeal Board of the United States Patent and Trademark Office. I acknowledge that I may be subject to cross examination in the case and that cross examination will take place within the United States. If cross examination is required of me, I will appear for cross examination within the United States during the time allotted for cross examination.

Appendix A

Dr. Benjamin B. Bederson
University of Maryland, College Park
Professor Emeritus, Computer Science

bederson@umd.edu
www.cs.umd.edu/~bederson

I have read the following and certify that it is a current and accurate statement of my professional record as of March 16, 2024.

1. PERSONAL INFORMATION

EDUCATION

9/89 – 6/92	**Ph.D., New York University, Computer Science Dept.**	**New York, NY**
9/87 – 8/89	**M.S., New York University, Computer Science Dept.**	**New York, NY**
9/82 – 6/86	**B.S., Rensselaer Polytechnic Institute, Computer Science Dept.** **Minor, Electrical Engineering**	**Troy, NY**

EMPLOYMENT

3/22 – Present	**J.S. Bryant School, Inc.** Therapeutic high school for LGBTQ+ students Co-founder, Chief Operating Officer, Board member, Treasurer and Clerk	**Cummington, MA**
1/19 – Present	**Bederson Expert Services, Inc.** Technical consulting	**Windsor, MA**
1/98 – Present	**University of Maryland, Computer Science Dept./UMIACS** 7/19 – Present: Professor Emeritus, Computer Science Department. 4/14 – 6/18: Associate Provost of Learning Initiatives, and Executive Director of Teaching and Learning Transformation Center 4/13 – 4/14: Special Advisor to the Provost on Technology and Educational Transformation 8/11 – 6/19: Professor 9/04 – 7/11: Associate Professor 6/00 – 9/06: Director of the Human-Computer Interaction Lab (HCIL) 1/98 – 8/04: Assistant Professor	**College Park, MD**
1/06 – Present	**International Children's Digital Library Foundation** Co-founder and Technical Director for this library of exemplary free online children's books from around the world. 7/17 – present: President, secretary and treasurer	**Windsor, MA**
10/14 – 4/23	**Hazel Analytics, Inc.** Co-founder & Board member: regulatory data analytics 10/14 – 12/19: Chief Technology Officer	**Seattle, WA**
9/06 – 10/14	**Zumobi, Inc.** Co-founder of VC-funded startup for mobile apps and advertising. 9/06–1/08: VP Client Technologies 1/08–10/14: Chief Scientist	**Seattle, WA**
6/03 – 11/08	**Windsor Interfaces, Inc.** Founder: Small company to commercialize HCIL products.	**Chevy Chase, MD**
1/95 – 8/97	**University of New Mexico, Computer Science Department** Assistant Professor in the Computer Science Department.	**Albuquerque, NM**
9/92 – 8/94	**Bell Communications Research (Bellcore)** Research Scientist in Computer Graphics and Interactive Media group.	**Morristown, NJ**

6/93 – 7/94	**New York University, Media Research Laboratory** Visiting Research Scientist.	**New York, NY**
9/90 – 8/92	**Vision Applications, Inc.** Research Scientist.	**New York, NY**
9/88 – 6/90	**New York University, Computer Science Department** Teaching Assistant.	**New York, NY**
1/87 – 5/87	**North Slope Borough/North Slope Higher Education Center** Instructor. Taught Computers & Society to rural Eskimo population.	**Barrow, AK**

2. RESEARCH, SCHOLARLY, AND CREATIVE ACTIVITIES

Note about publications:

- In all references, my name is in bold.
- Authors are displayed as published. Authors are usually listed in order of decreasing contribution – except that sometimes the last author is the lead advising faculty member. I put an asterisk next to my name when I served that role.
- Students that I supervised are underlined.

A. BOOKS

i. Authored Books

1. Herrnson, P.S., Niemi, R.G., Hanmer, M.J., **Bederson, B. B.**, Conrad, F.G., Traugott, M., (2008) "Voting Technology and the Not-So-Simple Act of Casting a Ballot," *Brookings Institute Press*.

ii. Edited Collections

1. Teevan, J., Jones, W., **Bederson, B. B.** (Eds.) (2006) *Communications of the ACM (CACM)*, Editors of special issue on "Personal Information Management", 49 (1), ACM Press.
2. **Bederson, B. B.**, Shneiderman, B. (Eds.) (2003). *The Craft of Information Visualization: Readings and Reflections*. San Francisco: Morgan Kaufmann.

iii. Book Chapters

1. Fails, J., Druin, A., **Bederson, B. B.**, Weeks, A., & Rose, A. (2009) A Child's Mobile Digital Library: Collaboration, Community and Change. Druin, A. (Ed.) *Mobile Technology for Children: Designing for Interaction and Learning*, Morgan Kaufmann Press.
2. Herrnson, P.S., Niemi, R.G., Hanmer, M.J., **Bederson, B. B.**, Conrad, F.G., Traugott, M.W. (2008) The Current State of Electronic Voting in the United States. Chen, H., Brandt, L., Dawes, S., Gregg, V., Hovy, E., Macintosh, A., Traunmüller, R., Larson, C. (Eds.) *Digital Government: Advanced Research and Case Studies*, Springer, 157-180.
3. Karlson, A., **Bederson, B. B.**, & Contreras-Vidal, Jose L. (2007) Understanding One Handed Use of Mobile Devices. Lumsden, Jo (Ed.), *Handbook of Research on User Interface Design and Evaluation for Mobile Technology*, Idea Group Reference, 86-101.
4. Hutchinson, H., Druin, A., **Bederson, B. B.** (2007) Designing Searching and Browsing Software for Elementary-Age Children. Lazar, J. (Ed.), *Universal Usability*. John Wiley. 1618-1630.
5. Druin, A., **Bederson, B. B.**, Boltman, A., Muira, A., Knotts-Callahan, D., & Platt, M. (1999). Children As Our Technology Design Partners. A. Druin (Ed.), *The Design of Children's Technology* (51-72). San Francisco: Morgan Kaufmann.
6. Hollan, J. D., **Bederson, B. B.**, & Helfman, J. (1998). Information Visualization. Helander, M., Landauer, T. K., & Prabhu, P. V. (eds.), *The Handbook of Human Computer Interaction* (Chap. 2, 33-48). Amsterdam: Elsevier Press.

7. **Bederson, B. B.**, Hollan, J. D., Stewart, J., Rogers, D., Druin, A., Vick, D., Ring, L., Grose, E., & Forsythe, C. (1997). A Zooming Web Browser. C. Forsythe, J. Ratner, & E. Grose (eds.), *Human Factors and Web Development* (Chap. 19, 255-266). New Jersey: Lawrence Erlbaum.

8. **Bederson, B. B.**, & Druin, A. (1995). Computer Augmented Environments: Physical Spaces to Enrich Our Lives. Jakob Nielsen (eds.), *Advances in Human-Computer Interaction* (Vol. 5, Chap. 2, 37-66). New Jersey: Ablex Press.

9. **Bederson, B. B.**, Wallace, R. S., & Schwartz, E. L. (1993). A Miniaturized Space-Variant Active Vision System: Cortex-I. Richard Mammone (eds.), *Artificial Neural Networks for Speech and Vision*. Chapman-Hall Publishers.

10. Wallace, R. S., Ong, P.-W., **Bederson, B. B.**, & Schwartz, E. L. (1993). Connective Graphs in Space-Variant Active Vision. George A. Bekey & Ken Goldberg (eds.), *Neural Networks in Robotics*. Kluwer Academic Publishers.

B. REFEREED ARTICLES
i. Journals

1. **Bederson, B. B.**, Jin, G. Z., Leslie, P., Quinn, A. J., Zou, B. (2017) "Incomplete Disclosure: Evidence of Signaling and Countersignaling", in *American Economic Journal: Microeconomics*, (in press).

2. Anderson, L. B., Gardner, E. E., Wolvin, A., Kirby-Straker, R., Yalcin, A., & **Bederson, B. B.*** (2016), "Incorporating Learning Analytics into Basic Course Administration: How to Embrace the Opportunity to Identify Inconsistencies and Inform Responses", in *Journal of the Association for Communication Administration*, 35 (1), Winter-Spring 2016, pp 2-14.

3. Lee, T. Y., **Bederson, B. B.*** (2016) "Give the people what they want: studying end-user needs for enhancing the web", *PeerJ Computer Science*, Nov, 2016, 2:e91 https://doi.org/10.7717/peerj-cs.91

4. Yalcin, M. A., Elmqvist, N. &, **Bederson, B. B.***. (2015) "AggreSet: Rich and Scalable Set Exploration using Visualizations of Element Aggregations". in *IEEE Transactions on Visualization and Computer Graphics*, 22(1), 688–697, 2015.

5. Hu, C., Resnik, P., & **Bederson, B. B.*** (2014) "Crowdsourced Monolingual Translation", in *ACM Transactions on Computer-Human Interaction (TOCHI)*, 21 (4), Aug 2014, pp. 22:1–22:35.

6. Lee, T.Y., Mauriello, M., Ahn, J. & **Bederson, B. B.*** (2014) "CTArcade: Computational Thinking with Games in School Age Children", in *International Journal of Child-Computer Interaction*, 2 (1), Jan 2014, 26–33.

7. Bonsignore, E., Quinn, A. J., Druin, A. & **Bederson, B. B.*** (2013) "Sharing Stories 'In The Wild': A Mobile Storytelling Case Study using StoryKit", in *Transactions on Computer-Human Interaction (TOCHI)*, ACM, 20 (3), July 2013, Article 18.

8. Resnik, P., Buzek, O., Kronrod, Y., Hu, C., Quinn, A.J. & **Bederson, B. B.** (2013) "Using Targeted Paraphrasing and Monolingual Crowdsourcing to Improve Translation", in *Transactions on Intelligent Systems and Technology*, ACM, 4 (3), July 2013, Article 38, 21 pages.

9. **Bederson, B. B.** (2011) "The Promise of Zoomable User Interfaces", *in Behaviour & Information Technology*, Taylor & Francis, Nov-Dec 2011, 30 (6), 853-866.

10. Druin, A., **Bederson, B. B.**, Rose, A., Weeks, A. (2009) "From New Zealand to Mongolia: Co-Designing and Deploying a Digital Library for the World's Children", *in Children, Youth and Environments*, University of Colorado, 19 (1), 34-57.

11. Conrad, F.G., **Bederson, B. B.**, Lewis, B., Peytcheva, E., Traugott, M.W., Hanmer, M.J., Herrnson, P.S., & Niemi, R.G. (2009) "Electronic voting eliminates hanging chads but introduces new usability challenges", *in International Journal of Human-Computer Studies (IJHCS)*, Elsevier Press, 67 (1), 111-124.

12. Hanmer, M.J., Park, W-H., Traugott, M.W., Niemi, R.G., Herrnson, P.S., **Bederson, B. B.**, and Conrad, F.C. (2008) "Losing Fewer Votes: The Impact of Changing Voting Systems on Residual Votes", *in Political Research Quarterly*, Sage Publications, September, 2008. doi:10.1177/1065912908324201.

13. **Bederson, B. B.**, Clamage, A., Plaisant, C. (2008) Enhancing In-Car Navigation Systems with Personal Experience, *in Transportation Research Record (TRR)*, The National Academies, 2064 (2008) 33-42.

14. Herrnson, P.S., Niemi, R.G., Hanmer, M.J., Francia, P.L., **Bederson, B. B.**, Conrad, F.G., Traugott, M. (2008) Voter's Evaluations of Electronic Voting Systems: Results from a Usability Field Study, *American Politics Research*, Sage Journals, 36 (4), July 2008, 580-611.

15. Cockburn, A., Karlson, A., & **Bederson, B. B.*** (2008) A Review of Overview+Detail, Zooming, and Focus+Context Interfaces, *ACM Computing Surveys*, ACM Press, December 2008, 41 (1).

16. Kang, H., **Bederson, B. B.**, & Suh, B. (2008) Capture, Annotate, Browse, Find, Share: Novel Interfaces for Personal Photo Management, *International Journal of Human-Computer Interaction (IJHCI)*, 23 (3), 1-23.

17. Parr, C.S., Lee, B., **Bederson, B. B.*** (2007) EcoLens: Integration and Interactive Visualization of Ecological Datasets, *Journal of Ecological Informatics*, Elsevier, 2 (1), 61-69.

18. Suh, B., and **Bederson, B. B.*** (2007) Semi-Automatic Photo Annotation Strategies Using Event Based Clustering and Clothing Based Person Recognition, *Interacting With Computers*, Elsevier, 19 (4), 524-544.

19. Hutchinson, H., **Bederson, B. B.**, Druin, A., (2007) Supporting Elementary-Age Children's Searching and Browsing: Design and Evaluation Using the International Children's Digital Library, *Journal of the American Society for Information Science and Technology*, John Wiley & Sons, 58 (11), 1618-1630.

20. Kang, H., Plaisant, C., Lee, B., **Bederson, B. B.***, (2007) NetLens: Iterative Exploration of Content-Actor Network Data, *Information Visualization*, Palgrave Macmillan, 6 (1), 18-31.

21. Lee, B., Parr, C.S., Plaisant, C., **Bederson, B. B.**, Veksler, V.D., Gray, W.D., Kotfila, C. (2006) TreePlus: Interactive Exploration of Networks with Enhanced Tree Layouts, *IEEE Transactions on Vision and Computer Graphics (TVCG)*, IEEE Press, 12 (6), 1414-1426.

22. Plaisant, C., **Bederson, B. B.**, Clamage, A., Hutchinson, H.B., Druin, A. (2006) Shared Family Calendars: Promoting Symmetry and Accessibility, *Transactions on Computer-Human Interaction*, New York: ACM, 13 (3), 313-346.

23. Shneiderman, B., **Bederson, B. B.**, and Drucker, S., (2006) Find that photo! Interface strategies to annotate, browse, and share, *Communications of the ACM*, 49 (4), 69-71.

24. Hutchinson, H.B., Rose, A., **Bederson, B. B.**, Weeks, A.C., Druin, A. (2005) The International Children's Digital Library: A Case Study in Designing for a Multi-Lingual, Multi-Cultural, Multi-Generational Audience, *Information Technology and Libraries*, 24 (1), 4-12.

25. Herrnson, P.S., **Bederson, B. B.**, Lee, B., Francia, P. L., Sherman, R.M., Conrad, F.G., Traugott, M., Niemi, R.G. (2005) Early Appraisals of Electronic Voting, *Social Science Computing Review*, 23 (3), 274-292.

26. Hourcade, J. P., **Bederson, B. B.**, Druin, A., & Guimbretière, F. (2004) Differences in pointing task performance between preschool children and adults using mice, *Transactions on Computer-Human Interaction*, New York: ACM, 11 (4), 357-386.

27. Parr, C. S., Lee, B., & **Bederson, B. B.*** (2004). Visualizations for Taxonomic and Phylogenetic Trees. *Bioinformatics*, Oxford University Press, 20 (17), 2997-3004.

28. **Bederson, B. B.**, Grosjean, J., Meyer, J. (2004) Toolkit Design for Interactive Structured Graphics, *Transactions on Software Engineering*, New York: IEEE, 30 (8), 535-546.

29. Chipman, L. E., **Bederson, B. B.,** Golbeck, J. A.(2004) SlideBar: Analysis of a Linear Input Device. *Journal of Behaviour and Information Technology*, London, Taylor & Francis, 23 (1), 1-9.

30. **Bederson, B. B.**, Clamage, A., Czerwinski, M. P., & Robertson, G. G. (2004) DateLens: A Fisheye Calendar Interface for PDAs, *Transactions on Computer-Human Interaction*, New York: ACM, 11 (1), 90-119.

31. Hourcade, J. P., **Bederson, B. B.**, & Druin, A. (2004) Building KidPad: An Application for Children's Collaborative Storytelling, *Software: Practice & Experience*, New Jersey: John Wiley & Sons, Ltd, 34 (9), 895-914.

32. Druin, A., **Bederson, B. B.**, Weeks, A., Farber, A., Grosjean, J., Guha, M. L., Hourcade, J. P., Lee, J., Liao, S., Reuter, K., Rose, A., Takayama, Y., & Zhang, L. (2003). The International Children's Digital Library: Description and Analysis of First Use. *First Monday*, *8*(5).

33. Druin, A., Revelle, G., **Bederson, B. B.**, Hourcade, J. P., Farber, A., Lee, J., & Campbell, D. (2003) A Collaborative Digital Library for Children: A Descriptive Study of Children's Collaborative Behavior and Dialogue. *The Journal of Computer-Assisted Learning*, 19 (2), 239-248.

34. Hourcade, J.P., **Bederson, B. B.**, Druin, A., Rose, A., Farber, A., Takayama, Y. (2003). The International Children's Digital Library: Viewing Digital Books Online. *Interacting with Computers*, Elsevier Press, 15 (3), 151-167.

35. Hornbæk, K., **Bederson, B. B.**, & Plaisant, C. (2002) Navigation Patterns and Usability of Zoomable User Interfaces With and Without an Overview, *ACM Transactions on Computer-Human Interaction*, 9 (4), 362-389.

36. **Bederson, B. B.**, Shneiderman, B., & Wattenberg, M. (2002) Ordered and Quantum Treemaps: Making Effective Use of 2D Space to Display Hierarchies, *ACM Transactions on Graphics*, 21 (4), 833-854, ACM Press. – **Won 2021 IEEE Vis Test of Time Award in InfoVis, http://ieeevis.org/year/2021/info/awards/test-of-time-awards.**

37. Good, L., & **Bederson, B. B.*** (2002) Zoomable User Interfaces as a Medium for Slide Show Presentations, *Information Visualization*, Palgrave Macmillan, 35-49.

38. Revelle, G., Druin, A., Platner, M., **Bederson, B. B.**, Hourcade, J.P., & Sherman, L. (2002) A Visual Search Tool for Early Elementary Science Students, *Journal of Science Education and Technology*, 11(1), 49-57.

39. **Bederson, B. B.**, & Meyer, J. (1998). Implementing a Zooming User Interface: Experience Building Pad++. *Software: Practice and Experience*, 28(10), 1101-1135.

40. **Bederson, B. B.**, Hollan, J. D., Perlin, K., Meyer, J., Bacon, D., & Furnas, G. W. (1996). Pad++: A Zoomable Graphical Sketchpad for Exploring Alternate Interface Physics. *Journal of Visual Languages and Computing*, 7, 3-31.

41. **Bederson, B. B.**, Wallace, R. S., & Schwartz, E. L. (1995). A Miniaturized Space-Variant Active Vision System: Cortex-I. *Machine Vision and Applications*, 8 (2), 101-109.

42. **Bederson, B. B.**, Wallace, R. S., & Schwartz, E. L. (1994). A Miniature Pan-Tilt Actuator: the Spherical Pointing Motor. *IEEE Transactions on Robotics and Automation*, 10(3), 298-308.

43. Wallace, R. S., Ong, P.-W., **Bederson, B. B.**, & Schwartz, E. L. (1994). Space-Variant Image Processing. *International Journal of Computer Vision*, 13(1), 71-90.

ii. Peer-Reviewed Published Full-Length Conference Papers

1. Yalçın, M. A., Elmqvist, N., & **Bederson, B. B.*** (2017) Raising the Bars: Evaluating Treemaps vs. Wrapped Bars for Dense Visualization of Sorted Numeric Data, *Proceedings of Graphics Interface (GI 2017)*, 41-49. DOI: https://doi.org/10.20380/GI2017.06

2. Quinn, A., & **Bederson, B. B.*** (2014) AskSheet: Efficient Use of Web Workers to Support Decision Making, *Proceedings of ACM CSCW (CSCW 2014)*, ACM Press, pp. 1456–1466.

3. Yeh, T., Chang, T-H., Xie, B., Walsh, G., Watkins, I., Wongsuphasawat, K., Davis, L.S., & **Bederson, B. B.*** (2011) Creating Contextual Help for GUIs Using Screenshots, *Proceedings of ACM UIST (UIST 2011)*, ACM Press, 145-154.

4. Quinn, A., & **Bederson, B. B.*** (2011) Human Computation: A Survey and Taxonomy of a Growing Field, *Proceedings of ACM CHI (CHI 2011)*, ACM Press, 1403-1412.

5. Resnik, P., Buzek, O., Hu, C., Kronrod, Y., Quinn, A.J., & **Bederson, B. B.*** (2010) Improving Translation via Targeted Paraphrasing, *Proceedings of Conference on Empirical Methods in Natural Language Processing (EMNLP 2010)*, 127-137.

6. Hu, C., **Bederson, B. B.,** & Resnik, P. (2010) Translation by Interactive Collaboration between Monolingual Users, *Proceedings of Graphics Interface (GI 2010)*, 39-46.

7. Dearman, D., Karlson, A., Meyers, B., & **Bederson, B. B.** (2010) Multi-Modal Text Entry and Selection on Mobile Devices, *Proceedings of Graphics Interface (GI 2010)*, 19-26.

8. Quinn, A., Hu, C., Arisaka, T., & **Bederson, B. B.*** (2008) Readability of Scanned Books in Digital Libraries, *Proceedings of ACM CHI (CHI 2008)*, ACM Press, 705-714. [22% acceptance rate]

9. Karlson, A., & **Bederson, B. B.*** (2008) One-Handed Touchscreen Input for Legacy Applications, *Proceedings of ACM CHI (CHI 2008)*, ACM Press 1399-1408. [22% acceptance rate]

10. **Bederson, B. B.**, Clamage, A., Plaisant, C., (2008) Enhancing In-Car Navigation Systems with Personal Experience, *in Proc. of the Transportation Research Board 87th annual meeting*, The National Academies, Washington, DC (2008) 1-11.

11. Karlson, A., & **Bederson, B. B.*** (2007) ThumbSpace: Generalized One-Handed Input for Touchscreen-Based Mobile Devices, *Proceedings of INTERACT 2007*, 324-338 – **Winner of Brian Shackel Award for making an "outstanding contribution with international impact in the field of HCI".**

12. Druin, A., Weeks, A., Massey, S., & **Bederson, B. B.** (2007) Children's Interests and Concerns When Using the International Children's Digital Library: A four country case study, *Proceedings of the Joint Conference on Digital Libraries (JCDL 2007)*, 167-176. – **Nominated for Best Paper Award, came in #2.** [36% acceptance rate].

13. Parhi, P., Karlson, A., & **Bederson, B. B.*** (2006). "Target Size Study for One-Handed Thumb Use on Small Touchscreen Devices", *Proceedings of MobileHCI 2006*, ACM Press, 203-210. – **Winner of Best Historical Paper Award, September 2016.**

14. Hutchinson, H. B., **Bederson, B. B.**, & Druin, A. (2006). "The Evolution of the International Children's Digital Library Searching and Browsing Interface", *Proceedings of 5th International Conference for Interaction Design and Children (IDC 2006)*, ACM Press, 105-112. [38% acceptance rate]

15. Hutchinson, H., Druin, A., **Bederson, B. B.**, Reuter, K., Rose, A., Weeks, A. (2005) How do I Find Blue Books About Dogs? The Errors and Frustrations of Young Digital Library Users, *Proceedings of HCII 2005*, Las Vegas, NV (CD-ROM).

16. Shneiderman, B. & **Bederson, B. B.** (2005). "Maintaining Concentration to Achieve Task Completion", *Proceedings of Designing User Experience (DUX 2005)*.

17. Karlson, A., **Bederson, B. B.**, & SanGiovanni, J. (2005). AppLens and LaunchTile: Two Designs for One-Handed Thumb Use on Small Devices, CHI Letters, 7(1), 201-210. [25% acceptance rate] – **Nominated for Best Paper Award.**

18. Khella, A., **Bederson, B. B.*** (2004). Pocket PhotoMesa: A Zoomable Image Browser for PDAs. *In Proceedings of Mobile and Ubiquitous Multimedia (MUM 2004)* ACM Press, 19-24.

19. Lee, B., Parr, C. S., Campbell, D., & **Bederson, B. B.*** (2004). How Users Interact With Biodiversity Information Using TaxonTree. *In Proceedings of Advanced Visual Interfaces (AVI 2004)* ACM Press, 320-327. [25% acceptance rate]

20. Suh, B., Ling, H., **Bederson, B. B.**, & Jacobs, J. W. (2003). Automatic Thumbnail Cropping and Its Effectiveness. UIST 2003, ACM Symposium on User Interface Software and Technology, CHI Letters, 5(2), 95-104. [22% acceptance rate] – **Winner of Best Student Paper Award**.

21. **Bederson, B. B.**, Lee, B., Sherman, R., Herrnson, P. S., Niemi, R. G. (2003). Electronic Voting System Usability Issues. CHI 2003, ACM Conference on Human Factors in Computing Systems, CHI Letters, 5(1), 145-152. [16% acceptance rate]

22. Hutchinson, H., Mackay, W., Westerlund, B., **Bederson, B. B.**, Druin, A., Plaisant, C., Evans, H., Hansen, H., Conversy, S., Beaudouin-Lafon, M., Roussel, N., Lacomme, L., Eiderbäck, B., Lindquist, S., Sundblad, Y. (2003). Technology Probes: Inspiring Design for and with Families. CHI 2003, ACM Conference on Human Factors in Computing Systems, CHI Letters, 5(1), 17-24. [16% acceptance rate]

23. Knudtzon, K., Druin, A., Kaplan, N., Summers, K., Chisik, Y., Kulkarni, R., Moulthrop, S., Weeks, H., & **Bederson, B.** Starting an Intergenerational Technology Design Team: A Case Study. *In Proceedings of* Interaction Design and Chidlren (*IDC 2003*) ACM Press, 51-58.

24. Baudisch, P., Cutrell, P., Robbins, D., Czerwinski, M., Tandler, P., **Bederson, B. B.**, & Zierlinger, A. (2003) Drag-and-Pop and Drag-and-Pick: Techniques for Accessing Remote Screen Content on Touch- and Pen-Operated Systems. *Proceedings of Interact 2003*, Austria: International Federation for Information Processing, 57-64. [33% acceptance rate]

25. Plaisant, C., Grosjean, J., & **Bederson, B. B.*** (2002) SpaceTree: Design Evolution of a Node Link Tree Browser. *Proceedings of Information Visualization Symposium (InfoVis 2002)* New York: IEEE, 57-64. [27% acceptance rate] – **Won 2022 IEEE Vis Test of Time Award in InfoVis, https://ieeevis.org/year/2022/info/awards/test-of-time-awards.**

26. Suh, B., & **Bederson, B. B.*** (2002) OZONE: A Zoomable Interface for Navigating Ontology Information. *Proceedings of International Conference on Advanced Visual Interfaces (AVI 2002)*, ACM Press, Trento, Italy, 139-143. [30% acceptance rate]

27. Boltman, A., Druin, A., **Bederson, B.**, Hourcade, J.P., Stanton, D., O'Malley, C., Cobb, S., Benford, S., Fast, C., Kjellin, M., & Sundblad, Y. (2002). The nature of children's storytelling with and without technology. *Proceedings of American Educational Research Association (AERA) Conference*, New Orleans.

28. **Bederson, B. B.** (2001). PhotoMesa: A Zoomable Image Browser Using Quantum Treemaps and Bubblemaps. UIST 2001, ACM Symposium on User Interface Software and Technology, CHI Letters, 3(2), 71-80. [19% acceptance rate]

29. Druin, A., **Bederson, B. B.**, Hourcade, J.P., Sherman, L., Revelle, G., Platner, M., Weng, S. (2001) Designing a Digital Library for Young Children. *In Proceedings of Joint Conference on Digital Libraries (JCDL 2001)* ACM Press, 398-405. [30% acceptance rate]

30. Benford, S., **Bederson, B. B.**, Åkesson, K., Bayon, V., Druin, A., Hansson, P., Hourcade, J. P., Ingram, R., Neale, H., O'Malley, C., Simsarian, K., Stanton, D., Sundblad, Y., & Taxén, G. (2000). Designing Storytelling Technologies to Encourage Collaboration Between Young Children. CHI 2000, ACM Conference on Human Factors in Computing Systems, CHI Letters, 2(1), 556-563. [19% acceptance rate]

31. **Bederson, B. B.**, Meyer, J., & Good, L. (2000). Jazz: An Extensible Zoomable User Interface Graphics Toolkit in Java. UIST 2000, ACM Symposium on User Interface Software and Technology, CHI Letters, 2(2), 171-180. [26% acceptance rate]

32. **Bederson, B. B.** (2000). Fisheye Menus. UIST 2000, ACM Symposium on User Interface Software and Technology, CHI Letters, 2(2), 217-225. [26% acceptance rate]

33. Gandhi, R., Kumar, G., **Bederson, B. B.**, & Shneiderman, B. (2000). Domain Name Based Visualization of Web Histories in a Zoomable User Interface. *In Proceedings of Eleventh International Workshop on Database and Expert Systems Applications – Second International Workshop on Web-Based Information Visualization (WebVis 2000)*, IEEE Computer Society, Los Alamitos, CA (2000), 591-598.

34. **Bederson, B. B.**, & Boltman, A. (1999). Does Animation Help Users Build Mental Maps of Spatial Information? *In Proceedings of Information Visualization Symposium (InfoVis 99)* New York: IEEE, 28-35. [23% acceptance rate]

35. Combs, T. T. A., & **Bederson, B. B.*** (1999). Does Zooming Improve Image Browsing? *In Proceedings of Digital Library (DL 99)* New York: ACM, 130-137. [21% acceptance rate]

36. Stewart, J., **Bederson, B. B.**, & Druin, A. (1999). Single Display Groupware: A Model for Co-Present Collaboration. *In Proceedings of Human Factors in Computing Systems (CHI 99)* ACM Press, 286-293. [25% acceptance rate]

37. Hightower, R. R., Ring, L., Helfman, J., **Bederson, B. B.**, & Hollan, J. D. (1998). Graphical Multiscale Web Histories: A Study of PadPrints. *In Proceedings of ACM Conference on Hypertext (Hypertext 98)* ACM Press, 58-65.

38. Druin, A., Stewart, J., Proft, D., **Bederson, B. B.**, & Hollan, J. D. (1997). KidPad: A Design Collaboration Between Children, Technologists, and Educators. *In Proceedings of Human Factors in Computing Systems (CHI 97)* ACM Press, 463-470. [22% acceptance rate]

39. **Bederson, B. B.**, Hollan, J. D., Stewart, J., Rogers, D., Druin, A., & Vick, D. (1996). A Zooming Web Browser. *In Proceedings of SPIE Multimedia Computing and Networking* New York: IEEE, 260-271. https://www.spiedigitallibrary.org/conference-proceedings-of-spie/2667/0000/Zooming-Web-browser/10.1117/12.235898.short

40. **Bederson, B. B.**, & Hollan, J. D. (1995). Advances in the Pad++ Zoomable Graphics Widget. *In Proceedings of USENIX Tcl/Tk '95 Workshop (Tcl/Tk 95)* New York: USENIX, 3.

41. Furnas, G. W., & **Bederson, B. B.** (1995). Space-Scale Diagrams: Understanding Multiscale Interfaces. *In Proc. of Human Factors in Computing Systems (CHI 95)* ACM Press, 234-241. [29% acceptance rate]

42. **Bederson, B. B.**, & Hollan, J. D. (1994). Pad++: A Zooming Graphical Interface for Exploring Alternate Interface Physics. *In Proc. of User Interface and Software Technology (UIST 94)* ACM Press, 17-26.

43. **Bederson, B. B.**, Wallace, R. S., & Schwartz, E. L. (1993). Control & Design of the Spherical Pointing Motor. *In Proceedings of IEEE International Conference on Robotics and Automation (ICRA 93)* New York: IEEE, 2, 630-636.

44. **Bederson, B. B.**, Wallace, R. S., & Schwartz, E. L. (1992). A Miniaturized Active Vision System. *In Proceedings of Eleventh International Conference on Pattern Recognition*, IEEE Press, 58-61.

45. **Bederson, B. B.**, Wallace, R. S., & Schwartz, E. L. (1992). Two Miniature Pan-Tilt Devices. *In Proceedings of IEEE International Conference on Robotics and Automation*, New York: IEEE Press, (1), 658-663.

46. Wallace, R. S., **Bederson, B. B.**, & Schwartz, E. L. (1992). Voice-Bandwidth Visual Communication Through Logmaps: the Telecortex. *In Proceedings of IEEE Workshop on Applications of Computer Vision* New York: IEEE Press, 4-10.

iii. Other Publications

1. Yalcin, M. A., Elmqvist, N., & **Bederson, B. B.*** (2017). Piled Bars: Dense Visualization of Numeric Data. Poster presented at Graphics Interfaces, 2017.

2. **Bederson, B. B.**, Barker, K., Owens, L., Kim, Y. J. & Palmer, K. (2017) Designing Organizations to Support Tech on Campus. Panel at SXSW Edu, Austin, TX, March 6, 2017.

3. Yalcin, M. A., Elmqvist, N., & **Bederson, B. B.*** (2016). Keshif: Out-of-the-Box Visual and Interactive Data Exploration Environment. In *Proceedings of IEEE VIS 2016 Workshop on Visualization in Practice: Open Source Visualization and Visual Analytics Software*.

4. Yalcin, M. A., Elmqvist, N., & **Bederson, B. B.*** (2016). Cognitive Stages in Visual Data Exploration. In *Proceedings of Beyond Time and Errors: Novel Evaluation Methods for Visualization* (BELIV 2016) at IEEE VIS 2016.

5. Roberts, S., Swan, L., & **Bederson, B. B.** (2016). "Fishing for Faculty: The Bait and Hooks", Workshop in 2016 Professional and Organizational Development (POD) Conference, Louisville, KY, November, 2016.

6. Anderson, L. B., Gardner, E. E., Wolvin, A., Kirby-Straker, R., Yalcin, A., & **Bederson, B. B.*** (2015), "Incorporating Learning Analytics into Basic Course Administration: How to Embrace the Opportunity to Identify Inconsistencies and Inform Responses". *In NCA 2015 - 101th Annual meeting of the National Communication Association*. **Top Paper in Basic Course Division.**

7. Anderson, L. B., Gardner, E. E., Wolvin, A., Kirby-Straker, R., Yalcin, A., & **Bederson, B. B.*** (2015), "Utilizing learning analytics to improve the basic course: A qualitative analysis of the instructor feedback captured in Revealer". *Paper presented at the annual meeting of the Eastern Communication Association, Philadelphia, PA, June 2015*.

8. Hara, K, Hajiaghayi, M., & **Bederson, B. B.** (2015). FluTCHA: Using Fluency to Distinguish Humans from Computers, short paper and poster, WWW2015, Florence, Italy, May 18-22, 2015.

9. Teasley, S., & **Bederson, B. B.** (2015). Learning Analytics and iSchools: What, Why & Worries, *at iConference*, Session for Interaction and Engagement, March 24-27, 2015, Newport Beach, CA.

10. Xu, Z., Goldwasser, D., **Bederson, B. B.**, Lin, J. (2014) Visual Analytics of MOOCs at Maryland, *Poster at Learning @ Scale Conference (L@S '14)*.

11. **Bederson, B. B.**, Jin, G., Leslie, P., Quinn, A.J., & Zhou, B. (alphabetical order), (2014) "Incomplete Disclosure: Insights from Maricopa", International Industrial Organization Conference, April 11-13, 2014, Chicago.

12. Lee, T.Y., Mauriello, M.L., Ingraham, J., Sopan, A., Ahn, J., & **Bederson, B. B.*** (2012) "CTArcade: Learning Computational Thinking while Training Virtual Characters Through Game Play", WiP at CHI 2012, ACM Press, 2309-2314.

13. Cranor, L., **Bederson, B. B.**, & Quesenberry, W. (2012) "Occupy CHI! Engaging U.S. Policymakers", Panel in CHI 2012, ACM Press, 1139-1142.

14. **Bederson, B. B.**, Quinn, A. J., & Rose, A. (2012) SearchParty: Learning to Search in a Web-based Classroom, Workshop paper at CHI 2012.

15. Hu, C., Resnik, P., Kronrod, Y., & **Bederson, B. B.*** (2012) Deploying MonoTrans Widgets in the Wild. Note at CHI 2012, ACM Press, 2935-2938.

16. Hu, C., Resnik, P., Kronrod, Y., Eidelman, V., Buzek, O., & **Bederson, B. B.*** (2011) The Value of Monolingual Crowdsourcing in a Real-World Translation Scenario: Simulation using Haitian Creole Emergency SMS Messages. *In Proceedings of EMNLP 2011 Sixth Workshop on Statistical Machine Translation, 399-404.*

17. Kronrad, Y., Hu, C., Buzek, O., & Quinn, A.J. (2011) Using Monolingual Crowd to Improve Translation. Student poster at AAAS 2011. **Winner of poster in Math, Technology and Engineering category.**

18. **Bederson, B. B.**, & Quinn, A.J. (2011) Web Workers Unite! Addressing Challenges of Online Laborers. Alt.CHI paper at CHI 2011, ACM Press, 97-106.

19. Hu, C., **Bederson, B. B.**, & Resnik, P. (2011) MonoTrans2: A New Human Computation System to Support Monolingual Translation. Short paper at CHI 2011, ACM Press, 1133-1136.

20. Kronrod, Y., Buzek, O., Hu, C., Quinn, A., Resnik, P., & **Bederson, B. B.*** (2010) Using Crowdsourcing to Translate Without Bilinguals. Poster at CrowdConf 2010.

21. Hu, C., **Bederson, B. B.**, and Resnik, P. (2010) Translation by Iterative Collaboration Between Monolingual Users. Abstract and demo at the Human Computation Workshop (HCOMP 2010), 54-55.

22. Buzek, O., Resnik, P., & **Bederson, B. B.*** (2010) Error Driven Paraphrase Annotation using Mechanical Turk, In Creating Speech and Language Data With Amazon's Mechanical Turk, NAACL 2010 Workshop, 2010.

23. Chen, R., Rose, A., & **Bederson, B. B.*** (2009) How People Read Books Online: Mining and Visualizing Web Logs for Use Information. In Proceedings of European Conference on Digital Libraries (ECDL 2009), Short Paper, 364-369.

24. **Bederson, B. B.**, Rutledge, P., Quinn, A. (2009) Generalizing the International Children's Digital Library. In Proceedings of the Digital Humanities Conference (DH 09), Poster.

25. **Bederson, B. B.**, Quinn, A., Druin, A. (2009) Designing the Reading Experience for Scanned Multi-lingual Picture Books on Mobile Phones. In Proceedings of the Joint Conference on Digital Libraries (JCDL 2009), Short Paper, ACM Press, New York, NY, 305-308.

26. Hu, C., Rose, A., **Bederson, B. B.*** (2009) Locating Text in Scanned Books. In Proceedings of the Joint Conference on Digital Libraries (JCDL 2009), Poster.

27. Druin, A., Cavallo, D., Fabian, C., **Bederson, B. B.**, Revelle, G., Rogers, Y. (2009) Mobile Technologies for the World's Children. In Proceedings of Extended Abstracts of Human Factors in Computing Systems (CHI 2009), ACM Press, Panel.

28. **Bederson, B. B.** (2008) "Experiencing the International Children's Digital Library", Interactions Magazine, ACM Press, 15 (6), 50-54.

29. Lazar, J., Hochheiser, H., Johnson, J., Karat, C-M., **Bederson, B. B.** (2008) "CHI Policy Issues Around the World", Panel in CHI 2008, ACM Press, 2277-2280.

30. Teevan, J., Jones, W., **Bederson, B. B.**, (2006) "Introduction: Personal Information Management," Communications of the ACM, 49 (1), 40-43. Ranked #3 "Year Rank" in annual downloads among ACM Magazines and Computing Surveys articles (CACM, 50 (12), 92-93).

31. Lee, B., Parr, C.S., Plaisant, C., **Bederson, B. B.**, (2006) "TreePlus: Visualizing Graphs as Trees," Video in InfoVis 2006.

32. Herrnson, P.S., Niemi, R.G., Hanmer, M.J., **Bederson, B. B.**, Conrad, F.G., Traugott, M., (2006) "The Importance of Usability Testing of Voting Systems," in Usenix/Accurate Electronic Voting Workshop.

33. Herrnson, P., Niemi, R., Hanmer, M., **Bederson, B. B.**, Conrad, F., Traugott, M., (2006) "Voter Errors in Electronic voting: Voting Systems, Ballot Type, and Voter Traits," In Midwest Political Science Association annual conference.

34. Herrnson, P., Niemi, R., Hanmer, M., **Bederson, B. B.**, Conrad, F., Traugott, M., (2006) "Voters' Abilities to Cast Write-In Votes Using Electronic Voting Systems," In Midwest Political Science Association annual conference.

35. Conrad, F., Peytcheva, E., Traugott, M., Lewis, B., Herrnson, P., **Bederson, B. B.** (2006) "Usability of Electronic Voting Systems: Field and Laboratory Experiments," In Midwest Political Science Association annual conference.

36. Lee, B., Parr, C. S., Plaisant, C., & **Bederson, B. B.*** (2005) "Visualizing Graphs as Trees: Plant a Seed and Watch it Grow", Proceedings of Graph Drawing 2005, 516-518.

37. Klein, C. &, **Bederson, B. B.*** (2005). "Benefits of Animated Scrolling", Proceedings of Extended Abstracts of Human Factors in Computing Systems (CHI 2005) ACM Press, Short Paper, 1965-1968.

38. Lee, B., Czerwinski, M., Robertson, G. G. &, **Bederson, B. B.** (2005). "Understanding Research Trends in Conferences using PaperLens", Proceedings of Extended Abstracts of Human Factors in Computing Systems (CHI 2005) ACM Press, Short Paper, 1969-1972.

39. Traugott, M.W., Hanmer, M.J., Park, W.H., Herrnson, P.S., Niemi, R.G., **Bederson, B. B.**, Conrad, F.G.,(2005) "The Impact of Voting Systems on Residual Votes, Incomplete Ballots, and Other Measures of Voting Behavior," In American Political Science Association meeting (APSA 2005).

40. Lee, B., Czerwinski, M., Robertson, G. G. &, **Bederson, B. B.** (2004). "Understanding Eight Years of InfoVis Conferences using PaperLens", InfoVis 2004 Symposium Compendium. **Winner of InfoVis Contest**.

41. **Bederson, B. B.** (2004) Interfaces for Staying in the Flow. In Ubiquity, ACM Press, (5) 27.

42. Hourcade, J. P., **Bederson, B. B.**, Druin, A. (2004) Preschool Children's Use of Mouse Buttons. In Proceedings of Extended Abstracts of Human Factors in Computing Systems (CHI 2004) ACM Press, Short Paper, 1411-1412.

43. Selker, T., Fischer, E. A., **Bederson, B. B.**, McCormack, C., Nass, C. (2003) Voting: User Experience, Technology and Practice. In Proceedings of Extended Abstracts of Human Factors in Computing Systems (CHI 2003) ACM Press, Panel, 700-701.

44. **Bederson, B. B.**, Clamage, A., Czerwinski, M. P., Robertson, G. G. (2003) A Fisheye Calendar Interface for PDAs: Providing Overviews in Small Displays. In Proceedings of Extended Abstracts of Human Factors in Computing Systems (CHI 2003) ACM Press, Demonstration, 618-619.

45. Hourcade, J.P., **Bederson, B. B.**, Druin, A., Rose, A., Farber, A., Takayama, Y. (2002). The International Children's Digital Library: Viewing Digital Books Online. Interaction Design and Children International Workshop, August 28-29, 2002, Eindhoven, The Netherlands 15 (3), 151-167.

46. Herrnson, P., **Bederson, B. B.** (2002) Debugging Maryland Balloting, Washington Post, Outlook Section, p. B08, Sunday May 12th, 2002.

47. Good, L., **Bederson, B. B.**, Stefik, M., Baudisch, P. (2002) Automatic Text Reduction For Changing Size Constraints. In Proceedings of Extended Abstracts of Human Factors in Computing Systems (CHI 2002) ACM Press, Short Paper, 798-799.

48. Hourcade, J.P., **Bederson, B. B.**, Druin, A., Taxén, G. (2002) KidPad: A Collaborative Storytelling Tool for Children. In Proceedings of Extended Abstracts of Human Factors in Computing Systems (CHI 2002) ACM Press, Referred Demo, 500-501.

49. Hourcade, J.P., **Bederson, B. B.**, Druin, A. (2002) SearchKids: A Digital Library Interface for Young Children. In Proceedings of Extended Abstracts of Human Factors in Computing Systems (CHI 2002) ACM Press, Referred Demo, 512-513.

50. **Bederson, B. B.** (2001). PhotoMesa: A Zoomable Image Browser Using Quantum Treemaps and Bubblemaps. UIST 2001, ACM Symposium on User Interface Software and Technology. Refereed demo.

51. Browne, H., **Bederson, B. B.**, Druin, A., Sherman, L., & Westerman, W. (September 2000) Designing a Collaborative Finger Painting Application for Children, HCIL-2000-17, CS-TR-4184, UMIACS-TR-2000-66

52. Hourcade, J., **Bederson, B. B.** (May 1999) Architecture and Implementation of a Java Package for Multiple Input Devices (MID) HCIL-99-08, CS-TR-4018, UMIACS-TR-99-26

53. Hightower, R.R., Ring, L.T., Helfman, J.I., **Bederson, B. B.**, Hollan, J.D. (1998) PadPrints: Graphical Multiscale Web Histories. UIST 1998, ACM Symposium on User Interface Software and Technology. Tech Note, 121-122.

54. Stewart, J., Raybourn, E., **Bederson, B. B.**, & Druin, A. (1998). When Two Hands Are Better Than One: Enhancing Collaboration Using Single Display Groupware. In Proceedings of Extended Abstracts of Human Factors in Computing Systems (CHI 98) ACM Press, Short Paper, 287-288.

55. **Bederson, B. B.**, Hollan, J. D., Druin, A., Stewart, J., Rogers, D., & Proft, D. (1996). Local Tools: An Alternative to Tool Palettes. In Proceedings of User Interface and Software Technology (UIST 96) ACM Press, Short Paper, 169-170.

56. **Bederson, B. B.**, Hollan, J. D. (1995) Pad++: A Zoomable Graphical Interface System. In Proceedings of Conference on Human Factors in Computing Systems Conference Companion (CHI 95) ACM Press, Short Paper, 23-24.

57. **Bederson, B. B.**, & Davenport, G., & Druin, A., & Maes, P. (1994). Immersive Environments: A Physical Approach to the Multimedia Experience, In Proceedings of IEEE International Conference on Multimedia Computing and Systems, Boston, Massachusetts, May 17-19, 1994, (Panel).

58. **Bederson, B. B.** (1995). Audio Augmented Reality: A Prototype Automated Tour Guide. In Proceedings of Human Factors in Computing Systems (CHI 95) New York: ACM Press, (Short Paper), 210-211.

59. Stone, L. M., Erickson, T., **Bederson, B. B.**, Rothman, P., Muzzy, R. (1994) Visualizing Data: Is Virtual Reality the Key? IEEE Visualization, IEEE Press, Short Paper, 410-413.

60. **Bederson, B. B.**, Stead, L., & Hollan, J. D. (1994). Pad++: Advances in Multiscale Interfaces. In Proceedings of Human Factors in Computing Systems (CHI 94) New York: ACM Press, Short Paper, 315-316.

61. **Bederson, B. B.** (1992). A Miniature Space-Variant Active Vision System: Cortex-I. Doctoral dissertation, New York University, New York, NY.

E. TALKS, ABSTRACTS, AND OTHER PROFESSIONAL PAPERS PRESENTED

i. Keynote Talks

1. April 2017 **CHIuXiD - The International Conference in Human-Computer Interaction & User Experience**, Jakarta, Indonesia
   "From Human-Computer Interaction to Strategic Leadership for Change"

2. March 2017 **Maryland College Learning Center Association**, Shady Grove, MD
   "Fishing for Faculty: Teaching & Learning Engagement at UMD"

3. April 2014 **Innovations in Teaching and Learning Conference**, College Park, MD
   "An Introduction to the Teaching and Learning Transformation Center"

4. October, 2012 **South African Institute for Computer Scientists and Information Technologists** Johannesburg, South Africa
   "Social Participation: How Collective Activity Can Make Change"

5. September, 2010 **Visual Information Communication International Symposium**, Beijing, China
   "The Promise of Zoomable User Interfaces"

6. May, 2010 **Human-Computer Interaction Lab's 27th Annual Symposium**, College Park, MD
   "The Promise of Zoomable User Interfaces"

7. November, 2009 Raja Roy Singh Keynote Lecture at the **UNESCO Asia-Pacific Programme of Educational Innovation for Development**, Hangzhou. China
   "Educational Technology for Creativity, Collaboration and Community"

8. February, 2009 **Microsoft Internal "UX Canvas Camp"**, Redmond, WA
   "A Short History of Zoomable User Interfaces"

9. September, 2002 **IEEE Symposium on Human Centric Computing Languages and Environments (HCC 02)**, Arlington, VA
   "Interfaces for Staying in the Flow"

ii. Invited Talks (doesn't include Keynote talks, which are listed above)

1. October 3, 2018, **Rutgers University**, Newark, NJ
   "Transforming Teaching at the University of Maryland"

2. September 28, 2018, **EPAM Executive Roundtable**, Minsk, Belarus
   "Workforce of the Future"
   on Panel with Eugene Roman (Canada Tire), Sjoerd Gehring (Johnson & Johnson) & Sandra Loughlin (UMD)

3. September 27, 2018, **EPAM Software Engineering Conference (SEC 2018)**, Minsk, Belarus
   "Open Company, Open Community, Open World"
   on Panel with Elaina Shekhter (EPAM), Sjoerd Gehring (Johnson & Johnson), Scott Nissenbaum (Ben Franklin Technology Partners) & Sandra Loughlin (UMD)

4. December 4, 2017, **Cornell Tech**, New York, NY
   "Academic Technologies in Higher Ed"

5. November 10, 2017, **Online Programs and MOOCs – Opportunities and Challenges**, in The 7th Annual MIS Academic Leadership Conference, RHSmith School of Business, University of Maryland

6. Sept 2, 2017, **Google**, New York, NY
   "Academic Technologies in Higher Ed"

7. June 11, 2015 **Designing a Learning Environment**, in "Open Textbooks: Challenges for Policy" workshop, University of Haifa, Haifa, Israel

8. May 13, 2015 **Strategic Integration of MOOCs into Graduate and Professional STEM Programs**, Champaign, Illinois
   Raineri, D., Breslow, L., **Bederson, B. B.**
   "Future of MOOCs in Research Universities"

9. April 13, 2015 **#EduAnalyticsDC Workshop**, Washington, DC
   "Understanding Consistency in a Large Multi-Section Course with Many Instructors"

10. March 3, 2015 **Coursera Partners Conference**, Newport Beach, CA
    Verstelle, M., Bennett, A., **Bederson, B. B.**, & Jeffries, Pam
    "Designing a MOOC Portfolio: Content Strategy for Online Education"

11. March 1, 2015 **Coursera Partners Conference**, Newport Beach, CA
    Buitendijk, S., **Bederson, B. B.**, Kerrison, M., & Price, V.
    "Value to Partners: Case Studies From Partner Institutions"

12. January 29, 2015 **University of Wisconsin, Madison**, Madison, WI
"Reflections on 20 Years Doing HCI Systems Research"
Department of Computer Science, Distinguished Lecture Series

13. Sheil, M., Rock, E., O'Brien, L., **Bederson, B. B.**, & Xiaoming, L. (2014) "Future Trajectories of MOOCS in Higher Ed", Panel at Coursera Partners' Conference.

14. February 12, 2014 **Patuxent Partnership**, Lexington Park, MD
"UMD MOOCs and What the Future Holds For Them"

15. January 29, 2014 **Carnegie Mellon University**, Pittsburgh, PA
"Power to the People: Approaches to Crowdsourcing"

16. January 14, 2014 **Microsoft**, Friendship Heights, MD
"Cracking the Code: Improving Computer Science Education Outcomes in the State of Maryland"
Panel participant on Microsoft public series "Conversations on Education"

17. November 20, 2013 **University of Maryland**, College Park, MD
"Mobile, Online, Flipped, Active: New Uses of Educational Technologies"
College of Education

18. October 11, 2013 **Huawei**, Hong Kong, China
"When Crowds Come Together"

19. October 8, 2013 **National Institute of Information and Communications Tecnology**, Osaka, Japan
"Crowdsourced Monolingual Translation"
in 2nd Workshop on Future Directions in Translation Research

20. February 1, 2013 **Google**, Mountain View, CA
"Social + MOOCs + Hcomp = SMOOCH: Computing Comes to Education"

21. January 29, 2013 **Google**, Mountain View, CA
"The Promise of Zoomable User Interfaces: Reflections on Design of Simple UX"

22. December 6, 2012 **Sunlight Foundation**, Washington, DC
"Digital Disclosure of a Nationally Standardized Database of Restaurant Food Safety Inspections" (with Ginger Jin)

23. November 19, 2012 **University of Maryland**, College Park, MD
"Innovation, Iteration & Creation: A Discussion about the Development of New Ideas in the Modern World"

24. November 6, 2012 **World Usability Day**, Minsk, Belarus
"The Promise of Zoomable User Interfaces"

25. November 2, 2012 **Central & Eastern European Software Engineering Conference in Russia** Moscow, Russia
"Learning to Code in an Online World"

26. November 2, 2012 **Central & Eastern European Software Engineering Conference in Russia** Moscow, Russia
Panelist in "Peopleware: what skills and qualifications we need to build a dream team of software engineers"

27. October 4, 2012 **UNISA – University of South Africa**, Johannesburg, South Africa
"Innovation, Iteration & Creation: A Discussion about the Development of New Ideas in the Modern World"

28. June 20, 2012 **University of Haifa**, Haifa, Israel
"Books that are Blue: What Children Can Teach Us About Creating New Technologies" (with Allison Druin)

29. June 19, 2012 **Interdisciplinary Center**, Herzilya, Israel
"Books that are Blue: What Children Can Teach Us About Creating New Technologies" (with Allison Druin)

30. Nov 17, 2011 **Future of Information Alliance**, College Park, MD
"Anonymity and Privacy While Learning"

31. Sept 21, 2011 **U.S. Senate and Congress Briefings**, Washington, DC
Panel participant in "Deconstructing the iPad: How Federally Supported Research Leads to Game-Changing Innovation" run by the Task Force on American Innovation and the CRA

32. Aug 24, 2011 **Summer Social Webshop** College Park, MD
"Translation by Collaboration Among Monolingual Users"

33. May, 2011 **National Science Foundation**, Arlington, VA
Distinguished Lecture Series
"Translation by Collaboration among Monolingual Users" (with Philip Resnik)

34. September, 2010 **Microsoft Research Asia**, Beijing, China
"Collaborative Monolingual Translation"

35. September, 2010 **Tsinghua University**, Beijing, China
"Collaborative Monolingual Translation"

36. April, 2010 **CHI 2010**, Atlanta, GA
Social Impact Award talk

37. October, 2009 **Google**, Mountain View, CA
Panel participant in "Breakthrough Learning in a Digital Age" invitation only conference

38. September, 2009 **Google Tech Talk**, Mountain View, CA
"Translation by Iterative Collaboration between Monolingual Users"

39. April, 2009 **University of Illinois (CS Dept.)**, Champaign-Urbana, IL
"Zoomable User Interfaces from Sun Sparcstations to iPhones"

40. April, 2009 **University of Illinois (iSchool)**, Champaign-Urbana, IL
"From Ulann Baatar to iPhone: A Digital Library for the World's Children"

41. February, 2009 **Tufts University**, Medford, MA
"From iPhone to Ulaan Baatar: A Digital Library for the World's Children"

42. February, 2009 **Microsoft Internal "UX Canvas Camp"**, Redmond, WA
"A Short History of Zoomable User Interfaces"

43. September, 2008, **Carnegie Mellon University**, Pittsburgh, PA
"Black Ears to Blonde Cats: Paths for Designing Change"

44. May, 2008, **Manchester Public Library** Manchester by the Sea, MA
"No Road, Drive: The ICDL Travels to Mongolia"

45. April, 2008 **Web 2.0 Expo**, San Francisco, CA
"Next Generation Mobile UI" (with John SanGiovanni)

46. February, 2008 **USACM Executive Council**, Washington, DC
"Voting Technology: The Not-So-Simple Act of Casting a Ballot"

47. October, 2007 **Widget Summit**, San Francisco, CA
"Mobile Widget Design"

48. September, 2007 **Knight Center for Specialized Journalism**, College Park, MD
"Mobile Technology Trends"

49. June, 2007 **Mobile Marketing Association**, New York, NY
"Designing for Usability"

50. May, 2007 **MIT Enterprise Forum**, Arlington, VA
"Co-present Mobile Collaboration"

51. December, 2006 **Human Factors and Ergonomics Society Potomac Chapter**, Bethesda, MD
"A Library for the World's Children"

52. June, 2006 **Open Society Forum**, Ulaan Baatar, Mongolia
"A Library for the World's Children"

53. February, 2006 **Dingman Center for Entrepreneurship, R.H. Smith School of Business**, UMD
"Web 2.0 UI"

54. December, 2005 **World Bank**, Washington, DC
"The International Children's Digital Library"

55. December, 2005 **IBM T.J. Watson Research Center**, Hawthorne, NY
"Making Visualization Work"

56. November, 2005 **NSA**, Laurel, MD
"Making Visualization Work"

57. October, 2005 **IBM Research**, Cambridge, MA
"Making Visualization Work"

58. October, 2005 **Johns Hopkins University – Computer Science Dept.**, Baltimore, MD
"Making Visualization Work"

59. September, 2005 **InfoToday Conference on 'Innovations in Search'**, New York, NY
"Zooming Into Visual Search"

60. March, 2005 **NFAIS**, Philadelphia, PA
"Making Sense of Search Results"

61. February, 2005 **American Association for the Advancement of Science (AAAS)** Washington, DC
Panel in annual conference,
"Designing Interfaces for Voting Machines"

62. February, 2005 **National Association of State Election Directors (NASED)** Washington, DC
Invited talk at annual conference.
"Designing Interfaces for Voting Machines"

63. January, 2005 **Microsoft**, Seattle, WA
"Interfaces for Staying in the Flow"

64. January, 2005 **Google**, Mountain View, CA
"The International Children's Digital Library"

65. December, 2004 **National Library of New Zealand,** Wellington, New Zealand
"The International Children's Digital Library"

66. December, 2004 **University of Waikato**, Hamilton, New Zealand
"Interfaces for Staying in the Flow"

67. December, 2004 **Victoria University Wellington**, Wellington, New Zealand
"Interfaces for Staying in the Flow"

68. December, 2004 **University of Canterbury**, Christchurch, New Zealand
"Interfaces for Staying in the Flow"

69. November, 2004 **National Archives and Records Administration (NARA)**, College Park, MD
in Conference "Partnerships in Innovation: Serving a Networked Nation"
"International Children's Digital Library"

70. April, 2004 **Johns Hopkins University Applied Physics Lab**, Laurel, MD
"Interfaces for Staying in the Flow"

71. October, 2003 **University of Maryland, Robert H. Smith School of Business**, College Park, MD
on InForum 2003 panel on "Does IT Matter?"

72. September, 2003 **University of Maryland**, College Park, MD
"Making Visualization Work"

73. September, 2003 **University of Victoria**, Victoria, Canada
"Interfaces for Staying in the Flow"

74. March, 2003 **National Archives and Records Administration**, College Park, MD
”Visualizations for Archivists”

75. March, 2003 **Microsoft Research**, Redmond, WA
”DateLens: A Scalable Fisheye Calendar Interface”

76. January, 2003 **Sun Microsystems**, Menlo Park, CA
”Zoomable User Interfaces for Searching and Browsing”

77. September, 2002 **Microsoft Research Limited**, Cambridge, England
”Information Visualization for Mobile Devices”

78. July, 2002 **Microsoft Research**, Redmond ,WA
Demo of DateLens with Bill Gates at Microsoft Faculty Summit

79. July, 2002 **Microsoft Research**, Redmond, WA
”Scalable Interfaces for Mobile Devices”

80. June, 2002, **WebShop**, Dept. of Sociology, UMD, College Park, MD
”Access and Usability: The Importance of Internet Applications”

81. January, 2002 **Workshop on Election Standards and Technology**, Washington, DC
”Visualization Techniques for Electronic Voting”

82. October, 2001 **Microsoft Research**, Redmond, WA
“Zoomable User Interfaces for Searching and Browsing: SearchKids & PhotoMesa”

83. October, 2001 **Xerox PARC**, Palo Alto, CA
“Zoomable User Interfaces for Searching and Browsing: SearchKids & PhotoMesa”

84. November, 2000 **Census Bureau, Dept. of Commerce**, Suitland, MD
”Zoomable User Interfaces”

85. May, 2000 **Bowie State University**, Bowie, MD
“Zoomable User Interfaces and Single Display Groupware”

86. April, 2000 **University of Delaware**, DE
“Zoomable User Interfaces and Single Display Groupware”

87. August, 1999 **Xerox PARC**, Palo Alto, CA
“Zoomable User Interfaces and Single Display Groupware”

88. August, 1999 **University of California, Berkeley**, Berkeley, CA
“Zoomable User Interfaces and Single Display Groupware”

89. August, 1999 **Sun Microsystems, Inc. (Java Group)**, Palo Alto, CA
“Zoomable User Interfaces and Single Display Groupware”

90. July, 1999 **Nokia**, Linköping Sweden
"Zoomable Information Retrieval Systems and Single Display Groupware"

91. June, 1998 **IBM**, Yorktown, NY
"Zoomable User Interfaces"

92. May, 1998 **Washington DC Linux User's Group**, Alexandria, VA
"Zoomable User Interfaces"

93. April, 1998 **National Institute of Standards and Technology (NIST)**, Gaitherberg, MD
"Zoomable User Interfaces"

94. March, 1998 **Microsoft Research**, Redmond, WA
"Zoomable User Interfaces"

95. October, 1997 **Netherlands Design Institute**, Amsterdam, Holland
"Pad++: Zoomable User Interfaces"

96. October, 1997 **Philips Labs**, Eindhoven, Holland
"Pad++: Zoomable User Interfaces"

97. October, 1997 **CID, Royal Institute of Technology (KTY),** Stockholm, Sweden
"Pad++: Zoomable User Interfaces"

98. September, 1997 **Swedish Institute of Computer Science (SICS)**, Stockholm, Sweden
"Pad++: Zoomable User Interfaces"

99. October, 1996 **ART3000, A French society for the development of Art & Technology**, Paris, France
"Pad++: A Zoomable Graphical Interface"

100. October, 1996 **University of Michigan, Department of Information Sciences**, Ann Arbor, MI
"Pad++: A Zoomable Graphical Interface"

101. July, 1996 **AT&T Bell Labs**, NJ
"Pad++: A Zoomable Graphical Interface"

102. January, 1996 **Stanford University, Cognitive Psychology Group**, CA
"Pad++: A Zoomable Graphical Interface"

103. October, 1995 **Cornell University, Computer Science Department**, Ithaca, NY
"Pad++: A Zoomable Graphical Interface"

104. June, 1995 **Sandia National Labs**, Los Alamos, NM
"Pad++: A Zoomable Graphical Interface"

105. April, 1995 **Los Alamos National Labs**, Los Alamos, NM
"Pad++: A Zoomable Graphical Interface"

106. November, 1993 **Digital Equipment Corporation, Stanford Research Center**, CA
"Pad++: A Multiscale Hierarchical Sketchpad"

107. October, 1993 **Brown University, Computer Science Department**, Providence, RI
"Pad++: A Multiscale Hierarchical Sketchpad"

108. April, 1993 **University of Chicago, Computer Science Department**, |
"PA3D: A Multiscale Hierarchical Sketchpad"

109. October, 1992 **Rensselaer Polytechnic Institute, Computer Science Department**, Troy, NY
"Cortex-I: A Miniature Active Vision System"

H. ORIGINAL DESIGNS, PLANS, INVENTIONS, AND PATENTS

i. Patents

1. SanGiovanni, J., & **Bederson, B. B.** (Inventors). (2022) *Systems, methods, and computer program products displaying interactive elements on a canvas.* US Patent #11,243,673

2. **Bederson, B. B.,** & SanGiovanni, J. (Inventors). (2021) *Techniques to modify content and view content on a mobile device*. US Patent #11,061,524.

3. SanGiovanni, J., & **Bederson, B. B.**, and Painter, B. (Inventors). (2018) *Systems and methods for adaptive third party content*. US Patent #10,019,963.

4. SanGiovanni, J., & **Bederson, B. B.** (Inventors). (2018) *Systems, methods, and computer program products displaying interactive elements on a canvas*. US Patent #9,959,020.

5. **Bederson, B. B.,** & SanGiovanni, J. (Inventors). (2017) *Techniques to modify content and view content on mobile devices*. US Patent #9,778,810.

6. SanGiovanni, J., & **Bederson, B. B.** (Inventors). (2016) *Systems, Methods, and Computer Program Products Providing an Integrated User Interface for Reading Content*. US Patent #9,361,130.

7. SanGiovanni, J., & **Bederson, B. B.** (Inventors). (2014) *Systems, Methods, and Computer Program Products Displaying Interactive Elements on a Canvas.* US Patent #8,819,570.

8. Pahud, M., Murillo, O. E., Karlson, A. K., & **Bederson, B. B.** (Inventors). (2012). *Monitoring Pointer Trajectory and Modifying Display Interface*. US Patent #8,261,211.

9. Good, L.E., **Bederson, B. B.**, & Stefik, M.J. (Inventors). (2010). *Methods and Systems for Supporting Presentation Tools Using Zoomable User Interfaces*. US Patent #7,707,503.
10. **Bederson, B. B.**, Good, L. E., & Stefik, M.J. (Inventors). (2009). *Methods and Systems for Incrementally Changing Text Representation*. US Patent #7,650,562 B2.
11. **Bederson, B. B.**, Good, L. E., & Stefik, M. J. (Inventors). (2009). *Methods and Systems for Incrementally Changing Text Representation*. US Patent #7,549,114 B2.
12. Wallace, R. S., **Bederson, B. B.**, & Schwartz, E. L. (Inventors). (1997). *TV Picture Compression and Expansion*. US Patent #5,642,167.
13. **Bederson, B. B.**, Wallace, R. S., & Schwartz, E. L. (Inventors). (1993). *Two-Dimensional Pointing Motor*. US Patent #5,204,573.
14. Wallace, R. S., **Bederson, B. B.**, & Schwartz, E. L. (Inventors). (1992). *Telephone Line Picture Transmission*. US Patent #5,175,617.

ii. University Disclosures

1. **Bederson, B. B.** & Lin, J. (Inventors) (2009), CrowdFlow: A Computer-Human Hybrid Cloud Computing Model.
2. **Bederson, B. B.** (Inventor) (2002), Fisheye Calendar: A Calendar interface for small to large devices, IS-2002-015.
3. **Bederson, B. B.** (Inventor) (2001), PhotoMesa: A Zoomable Image Browser, IS-2001-053
4. **Bederson, B. B.**, & Chipman, L. G. (Inventors) (2000), *Physical Linear Slider Device to Control Computer Interface*, IS-2000-018.
5. **Bederson, B. B.** (Inventor) *Fisheye Menus For Selecting an Item From a Long List*, IS-2000-025.
6. **Bederson, B. B.**, Druin, A., & Pablo, J. P. (Inventors) (2000), *KidPad: A Collaborative Storytelling Environment for Children*, IS-2000-019.

I. CONTRACTS AND GRANTS

Total Funding: $18,036,144
UMD Portion: $10,329,299

1. **Ithaka SR, July 2016, co-PI**
   Elementary Statistics with an adaptive learning system
   $113,500
2. **Maryland Innovation Initiative, March 2014, PI**
   A Nationwide Database of Food Safety Inspections for Retail Establishments
   $100,000
3. **Huawei, July 2013, PI**
   XParty: Synchronous Online Language Learning
   $54,000
4. **Google, March 2013, PI**
   XParty: Synchronous Peer Learning in MOOCs (extension)
   $48,872
5. **Google, December 2011, PI**
   Search Party: Learning to Search in a Web-Based Classroom
   $60,000
6. **Alfred P. Sloan Foundation, November 2011, co-PI**
   Digital Disclosure of a Nationally Standardized Database of Restaurant Food Safety Inspections
   $465,272

7. **Google, June 2011, PI**
   Search Party: Web-Based Classroom Learning to Search
   $15,000

8. **Google, June 2011, co-PI**
   Translate the World: A Unified Framework for Crowdsourcing Translation
   $150,000

9. **Nokia Research, July 2010, PI**
   Mobile Learning
   $36,000

10. **NSF, CDI Type I: Translation as a Collaborative Process, Sep 2009, PI**
    $630,000

11. **Google, July 2009, PI**
    Translation as a Collaborative Process
    $70,000

12. **Sesame Workshop, January 2009, co-PI**
    Literacy 360 Alliance
    $22,500

13. **Eliassen Foundation, Nov 2008, co-PI**
    ICDL Elias Project
    $50,000

14. **Intel, Nov 2008, co-PI**
    ICDL ClassmatePC Project
    $50,000

15. **NSF, Designing and Understanding Intergenerational Mobile Learning Communities, Sep 2008, co-PI**
    $100,000

16. **Government of Mongolia Ministry of Education, Culture and Science – Nov2008, PI**
    International Children's Digital Library Phase 2
    $230,000
    $190,000 (for UMD)

17. **NSF, Usability Study of Independent Voter Verification Systems – July 2006, co-PI**
    PI – Paul Herrnson (Gov't & Politics)
    $68,000

18. **Government of Mongolia Ministry of Education, Culture and Science – May 2006, PI**
    Creating Digital Libraries in Mongolia
    $75,000

19. **IBM Faculty Award – December 2005, PI**
    Award to support my research on the open source Piccolo graphics toolkit.
    $30,000

20. **Maryland State Board of Elections, September 2005 – January 2006, co-PI**
    PI – Paul Herrnson (Gov't & Politics)
    $70,000

21. **(Agency not disclosed), April 2005 – March 2006, co-PI**
    Joint Institute for Knowledge Discovery
    $224,000 (my part of larger $2,000,000 effort led by VS Subrahmanian)

22. **Booz Allen (subcontract from ARDA), March 2005 – April 2006**
    Human-Information Interaction Research
    $325,000

23. **Toshiba, July 2004 – December 2006, PI**
    Automatic Thumbnail Cropping
    $20,000

24. **Microsoft, January 2004 – December 2006, PI**
    Interaction Design and Visualization
    $1,000,000

25. **DARPA, February, 2003 – January 2006, PI**
    Zoomable User Interfaces for the Semantic Web
    $230,000

26. **NSF, September, 2003 – August 2006, co-PI**
    PI – Paul Herrnson (Gov't & Politics), co-PI, Richard Niemi (Univ. of Rochester), Michael Traugott (Univ. of Michigan)
    An Assessment of Voting Technology and Ballot Design
    $900,000 – approx $540K for UMD research

27. **Chevron, Oct 2002 – Oct 2003, co-PI**
    PI – Catherine Plaisant (UMIACS)
    Information Visualization for the Oilfield of the Future
    $75,000

28. **IBM, September, 2002, PI**
    T221 high-resolution display
    $9,000 in kind

29. **IMLS, September, 2002 – August, 2005, co-PI**
    PI – Allison Druin (CLIS)
    The Children's International Digital Library
    $397,162

30. **NSF, September, 2002 – August 2005, PI**
    Search Interfaces for Biodiversity Informatics
    $380,000

31. **NSF, September 2002 – August 2007, co-PI**
    PI – Allison Druin (CLIS), co-PI, Anne Weeks
    Developing a Children's International Digital Library
    $3,000,000 ($2,125,000 to UMD)

32. **NSF, September 2002 – August 2005, co-PI**
    co-PI – Allison Druin (CLIS), PI - Nancy Kaplan (Univ. of Baltimore), Stuart Malthrop (U. of Balt.)
    An HCI Partnership Serving Under represented Groups
    $420,000 ($133,000 to UMD)

33. **Microsoft Research, May 2002 – April 2001, PI**
    Mobile Interfaces and .NET
    $100,000

34. **Microsoft Research, September 2001 – August 2002, PI**
    Mobile Interfaces
    $50,000

35. **DARPA, May 2001 – August 2003, PI**
    Zoomable User Interfaces for the Semantic Web
    $320,000

36. **European Union – Esprit, The Disappearing Computer, Jan 2001 – December 2003, co-PI**
    co-PI – Allison Druin (CLIS), Several PIs in Europe
    With Royal Institute of Technology (KTH – Sweden), Univ. of Paris Sud, France.
    InterLiving: Designing Interactive, Intergenerational Interfaces for Living Together
    ~$1,500,000 - approx $400K for UMD research

37. **Chevron, Nov 2000 – May, 2002, PI**
    co-PI – Catherine Plaisant (UMIACS)
    Information Visualization
    $141,000

38. **DARPA, May 1998 – June 2002, PI**
    Zoomable User Interfaces for InImEx and Command Post of the Future (CPOF)
    $1,000,000

39. **Lockheed Martin Corp. sub-contract from DARPA, June 1999 - June 2000, PI**
    Unified Zoomable Environment (UZE) for Command Post of the Future
    $40,000

40. **European Union – Esprit, Intelligent Information Interfaces, Sept. 1998 – August 2001, co-PI**
    co-PI – Allison Druin (CLIS), Several PIs in Europe
    With Swedish Institute of Computer Science, Royal Institute of Technology (KTH – Sweden)
    University of Nottingham, England.
    KidStory
    ~$1,500,000 - approx $300K for UMD research

41. **Sun Microsystems, May 1999, PI**
    Zoomable User Interfaces
    $30,000 in equipment

42. **UNM sub-contract from DARPA, February 1998 – March 1999, PI**
    Pad++: Zoomable User Interfaces
    $200,000

43. **Microsoft, April, 1998, PI**
    Productivity and development software
    $5,000 in software and tech support

44. **Trivista, PI January 1998 - January 1999, PI**
    Graphical User Interfaces based on Zooming
    $50,000

UNIVERSITY OF NEW MEXICO

45. **Sony Research Corporation, PI**
    co-PI – Jim Hollan (Univ. of New Mexico), co-PI – Ken Perlin (New York University)
    Licensing of Pad++ software from UNM and NYU
    $500,000 plus royalties

46. **Intel Donation, January, 1997, co-PI**
    PI – Jim Hollan (Univ. of New Mexico)
    200 MHz PC Computer
    $4,000 in-kind

47. **DARPA, July'94 - June'97, Worked on grant with Jim Hollan**
    Beyond Imitation: A Strategy For Building A New Generation of HCI Design Environments
    $3,000,000 over 3 years with subcontracts to New York University and the Univ. of Michigan

48. **Sandia LDRD (Sandia internal research project) Oct'95 - Oct'96, PI**
    Data Zooming - A New Physics for Information Navigation
    $64,000

49. **Sandia SURP (Sandia University Research Program) Oct'95 - Oct'96, PI**
    Pad++: A Zoomable Interface to the World-Wide Web
    $40,000

50. **Sony Research Corporation, Jan'96, PI**
    co-PI – Allison Druin (University of New Mexico)
    Help plan Sony's efforts to develop a Zooming User Interface system
    $3,674

51. **Sandia LDRD (Sandia internal research project) Oct'94 - Oct'95, Worked on grant with Jim Hollan**
$40,000

52. **Bellcore Donation, July'93, PI**
SGI Indigo Workstation computer
$30,000 in-kind

J. FELLOWSHIPS, PRIZES, AWARDS

1. **2022 – IEEE VIS Test of Time Award.** Joint with Catherine Plaisant and Jesse Grosjean – for my 2002 paper: SpaceTree: Supporting Exploration in Large Node Link Tree, Design Evolution and Empirical Evaluation. *IEEE Symposium on Information Visualization, 2002. INFOVIS 2002.*, 2002, pp. 57-64, doi: 10.1109/INFVIS.2002.1173148. https://ieeevis.org/year/2022/info/awards/test-of-time-awards

2. **2021 – IEEE VIS Test of Time Award.** Joint with Ben Shneiderman and Martin Wattenberg – for my 2001 and 2002 papers: Ordered and Quantum Treemaps: Making effective use of 2D space to display hierarchies. Benjamin B. Bederson, Ben Shneiderman, Martin Wattenberg. ACM TOG 21(4):833-854 200 DOI: 10.1145/571647.571649. https://ieeevis.org/year/2021/info/awards/test-of-time-awards

3. **2016 – Winner of Best Historical Paper Award.** Joint with Pekka Parhi and Amy K. Karlson MobileHCI 2016 – 18th International Conference on Human-Computer Interaction With Mobile Devices and Services for "Target Size Study for One-Handed Thumb Use on Small Touchscreen Devices", MobileHCI 2006.

4. **2012 – Elected to the CHI Academy**
http://www.sigchi.org/about/awards/

   The CHI Academy is an honorary group of individuals who have made substantial contributions to the field of human-computer interaction. These are the principal leaders of the field, whose efforts have shaped the disciplines and/or industry, and led the research and/or innovation in human-computer interaction. The criteria for election to the CHI Academy are:
   - Cumulative contributions to the field.
   - Impact on the field through development of new research directions and/or innovations.
   - Influence on the work of others.

5. **2011 – Recognized as an ACM Distinguished Scientist**
http://awards.acm.org/distinguished_member/year.cfm

   The Distinguished Member Grade recognizes those ACM members with at least 15 years of professional experience and 5 years of continuous Professional Membership who have achieved significant accomplishments or have made a significant impact on the computing field.

6. **2010 – ICDL received the American Library Association President's Award for International Library Innovation**. Joint with Allison Druin and Ann Weeks.

7. **2010 – Winner of SIGCHI Social Impact Award**
http://www.sigchi.org/about/awards/2010-sigchi-awards

8. **2009 – Winner of Digital Education Achievement Award from the Center for Digital Education and Converge magazine**
For joint work on the International Children's Digital Library with Allison Druin and Ann Weeks.

9. **2007 – Winner of Brian Shackel Award for**
"outstanding contribution with international impact in the field of HCI"
Karlson, A., & Bederson, B. B. (2007) ThumbSpace: Generalized One-Handed Input for Touchscreen-Based Mobile Devices, *Proceedings of INTERACT 2007*, 324-338.

10. **2005 – IBM Faculty Award**
$30,000 gift to support my work on open source Piccolo graphics toolkit

11. **2005 – The International Children's Digital Library (www.icdlbooks.org)** website was selected for inclusion by the National Endowment for the Humanities on their EDSITEment website (http://edsitement.neh.gov) as one of the best online resources for education in the humanities.

12. **2004 – Winner of InfoVis Contest**
Lee, B., Czerwinski, M., Robertson, G. G. &, Bederson, B. B. (2004). "Understanding Eight Years of InfoVis Conferences using PaperLens", InfoVis 2004, IEEE, 216-217.

13. **2003 – Winner of Best Student Paper Award**
Suh, B., Ling, H., Bederson, B. B., & Jacobs, J. W. (2003). "Automatic Thumbnail Cropping and Its Effectiveness". UIST 2003, ACM Symposium on User Interface Software and Technology, CHI Letters, 5(2), 95-104.

14. **1992 – Janet Fabri Memorial Award for Outstanding Doctoral Dissertation**,
Department of Computer Science, Courant Institute, New York University

K. REVIEWING ACTIVITIES

ACM Conference on Graphics (SIGGRAPH)
ACM Conference on Human Factors in Computing Systems (CHI)
ACM Conference on Information Retrieval (IR)
ACM Conference on User Interfaces and Software Technology (UIST)
ACM Transactions on Computer-Human Interaction (TOCHI)
Communications of the ACM (CACM)
Computer Graphics and Applications
Graphics Interface Conference, Canada (GI)
International Conference on Information Visualization
International Journal of Human-Computer Interaction
IEEE Symposium on Information Visualization (InfoVis)
IEEE Symposium on Visual Analytics Science and Technology (VAST)
IEEE Transactions on Software Engineering (TSE)
IEEE Transactions on Visualization and Computer Graphics (TVCG)
Journal of Experimental Algorithmics
Journal of Information Visualization
Journal of Software Practice and Engineering (SPE)
NSERC (Canadian scientific funding agency)
National Science Foundation

L. OTHER
i. Software

StoryKit	iPhone app for children and their elders to create new books. Put in iPhone App Store August, 2009. Typical usage of 100,000 hours of story writing per month.
ICDL for iPhone	iPhone app for reading books from the International Children's Digital Library. Put in iPhone App Store November, 2008.
International Children's Digital Library	A library of children's books. Put on the Web Nov, 2002. http://www.childrensbooks.org • Unique accessors total: > 7,000,000 • Unique accessors monthly: ~130,000
DateLens	A calendar program for PDAs. Put on the Web July, 2002
SpaceTree	A general purpose tree browser. Put on the Web Dec, 2002. http://www.cs.umd.edu/hcil/spacetree
PhotoMesa	An end-user zoomable photo browser. Put on the Web May, 2001. http://www.cs.umd.edu/hcil/photomesa
CounterPoint	A zoomable presentation tool that works as a plug-in for Microsoft PowerPoint. Put on the Web in late 2001. http://www.cs.umd.edu/hcil/counterpoint
Piccolo	A library to support structured 2D graphics, the successor to jazz. Put on the Web in July 2002. http://www.cs.umd.edu/hcil/piccolo
Jazz	A general-purpose Java toolkit for building Zoomable User Interfaces. Put on the Web as Open Source software July 1999. http://www.cs.umd.edu/hcil/jazz
KidPad	An application that teaches young children communication skills through collaborative storytelling. Built using MID and KidPad. Put on the Web for non-commercial use March 2000. Access through March 2001 follow. http://www.cs.umd.edu/hcil/kidpad
Fisheye Menus	A new user interface widget for selecting one item for a long list using graphical distortion. Put on the Web for non-commercial use June 2000. Access through March 2001 follow. http://www.cs.umd.edu/hcil/fisheyemenu
MID	A general-purpose Java toolkit for supporting multiple input devices. It currently supports multiple USB mice on Windows 98. Put on the Web as Open Source software July 1999. It is used by the small but growing community of researchers investigating Single Display Groupware http://www.cs.umd.edu/hcil/mid
Pad++	Pad++ is described in detail in the papers referenced above. http://www.cs.umd.edu/hcil/pad++
Togl	An extension to Tcl/Tk that allows the creation of OpenGL graphics written in C to appear in a window managed by Tk. In addition, Tcl event bindings can be attached to the window which can then communicate with the C code that did the OpenGL rendering. Put on the net for public access. http://togl.sourceforge.net/

ii. Media

1. February 2, 2017 **The Diamondback** by Carly Taylor
   "McKeldin Mall's Newest Academic Building Will Be Completed in March After Nearly 3 Years"
   http://www.dbknews.com/2017/02/02/edward-st-john-construction-umd/

2. August 29, 2016 **The Diamondback** by Andrew Dunn
"University System of Maryland to offer an online course for free"
http://www.dbknews.com/2016/08/30/mooc-umb-umuc-online-usm/

3. February 15, 2016 **The Diamondback** by Samantha Reilly
"SGA passes resolution to revive 2012 syllabus bill"
http://www.dbknews.com/2016/02/16/umd-sga-passes-syllabus-resolution-to-revive-university-senate-bill/

4. September 24, 2015 **The Diamondback** by Taylor Swaak
"Active-Learning Courses Gain Traction at the University of Maryland"
http://www.diamondbackonline.com/news/active-learning-courses-gain-traction-at-the-university-of-maryland/article_435098ca-6247-11e5-a8e2-df59d97181a5.html

5. September 14, 2015 **Washington Post Express** by Beth Luberecki
"Massive open online courses (MOOCs) can help you achieve the next step in your career"
https://www.washingtonpost.com/express/wp/2015/09/14/massive-open-online-courses-moocs-can-help-you-achieve-the-next-step-in-your-career/

6. April 30, 2015 **The Diamondback** by Talia Richman
"USM Center for Academic Innovation to be renamed to honor Brit Kirwan"
http://www.diamondbackonline.com/news/article_51cbc02c-eeb7-11e4-a838-6b9857ba8e37.html

7. April 13, 2015 **The Diamondback** by Rokia Hassanein
"UMD Team Creates Nation's Largest Food Safety Inspection Database"
http://www.diamondbackonline.com/news/article_553da506-e181-11e4-b6c9-0f23d720b7cc.html#.VS1VV_HbNqc.twitter

8. April 6, 2015 **Quality Assurance & Food Safety Magazine**
"Database of Food Safety Inspection Information Created"
http://www.qualityassurancemag.com/food-safety-inspection-information.aspx

9. February 23, 2015 **Diamondback, UMD Student Newspaper** by Taylor Swaak
"New UMD website offers alternative ways to save money on textbooks"
http://www.diamondbackonline.com/news/article_0d910a34-baf5-11e4-826a-dfbcb9e8b5f8.html

10. January 13, 2015 **WAMU Kojo Nnamdi Show**
"The Rise of Mobile Apps"
http://thekojonnamdishow.org/shows/2015-01-13/tt_the_rise_of_mobile_apps

11. October 1, 2014 **The Chronicle of Higher Education**
"Optimism About MOOCs Fades in Campus IT Offices"
http://chronicle.com/blogs/wiredcampus/optimism-about-moocs-fades-in-campus-it-offices-survey-finds/54705

12. September 8, 2014 **WAMU Kojo Nnamdi Show**
"Beefing Up Photo, Cloud and Online Security"
http://thekojonnamdishow.org/shows/2014-09-09/beefing-photo-cloud-and-online-security

13. April 29, 2014 **Diamondback, UMD Student Newspaper** by James Levin
"Learning to ask for help"
http://www.diamondbackonline.com/news/article_632cbbb8-cf5b-11e3-b8b4-0017a43b2370.html

14. April 18, 2014 **CNN.com** by Emanuella Grinberg
"Removing 'barriers' to education through free college textbooks"
http://www.cnn.com/2014/04/18/living/open-textbooks-online-education-resources/

15. January 27, 2014 **DiamondBack, UMD Student Newspaper** by Ellie Silverman
"University expanding online class sequences through Vanderbilt partnership"
http://www.diamondbackonline.com/news/campus/article_dff739f4-86ed-11e3-9a18-001a4bcf6878.html

16. September 27, 2013 **Baltimore Business Journal** by Sarah Gantz
"Maryland Schools use Online Model to Tout Brand, Attract Students"
http://www.bizjournals.com/baltimore/print-edition/2013/09/27/maryland-schools-use-online-model-to.html?page=all

17. July 16, 2013 **HuffingtonPost.com**
"Blended Learning: College Classrooms of the Future"
http://www.huffingtonpost.com/uloop/blended-learning-college-_b_3598718.html

18. December 5, 2012 **Diamondback, UMD Student Newspaper** by Allison Gray
"University members hoping to see 'massive open online courses' integrated"
http://www.diamondbackonline.com/news/article_4873330c-3ef1-11e2-9a16-0019bb30f31a.html

19. September 21, 2012 **SmartMoney.com** by Quentin Fottrell
In Apple's Maps War vs. Google, Consumers Lose
http://blogs.smartmoney.com/advice/2012/09/21/in-apples-maps-war-vs-google-consumers-lose/?link=SM_hp_ls4e

20. September 18, 2012 **WAMU Kojo Nnamdi Show**
"Creativity and the Patent Wars" (guest on one-hour show)
http://thekojonnamdishow.org/shows/2012-09-18/creativity-and-patent-wars

21. September 7, 2012 **New York Magazine** by Matthew Shaer
"The Digital Elite: Smartphones are getting huge. Can the average-size thumb keep up?" (discusses my study on thumb size and mobile touch screens.

22. Aug 13, 2012 **Fact Witness in Apple v. Samsung trial covered broadly**
http://blogs.wsj.com/digits/2012/08/13/samsungs-first-witnesses-push-prior-art-after-minor-victory/

    http://news.cnet.com/8301-13579_3-57492486-37/samsung-goes-on-offense-aims-to-bust-apple-patents/

    http://arstechnica.com/tech-policy/2012/08/apple-rests-patent-case-as-judge-tosses-three-samsung-phones-from-trial/

    http://www.forbes.com/sites/connieguglielmo/2012/08/13/apple-says-it-complained-about-samsung-copying-in-2010-live-blog/

    http://allthingsd.com/20120813/judge-refuses-to-toss-most-of-apples-suit-against-samsung/

    http://www.theverge.com/2012/8/13/3240686/samsung-apple-patents-launchtile-diamondtouch-table

    http://www.eweek.com/c/a/Mobile-and-Wireless/Samsung-Begins-Presenting-Case-in-Apple-Patent-Infringement-Trial-162894/

23. May 7, 2012 **WAMU Kojo Nnamdi Show**
"Free Online Courses - Higher Ed of the Future?" (guest on hour show)
http://thekojonnamdishow.org/shows/2012-05-07/free-online-courses-higher-ed-future

24. January 24, 2012 **Washington Post** by Bonnie Berkowitz and Alberto Cuadra
"Touchscreens: How they work", I am the primary source
http://www.washingtonpost.com/national/health-science/touchscreens-how-they-work/2012/01/23/gIQAZHlAMQ_graphic.html

25. June 28, 2011 **New Scientist** by Jim Giles
"The man-machine: Harnessing humans in a hive mind", discussed MonoTrans.
http://www.newscientist.com/article/mg21028181.900-the-manmachine-harnessing-humans-in-a-hive-mind.html

26. June 14, 2011 **WAMU Kojo Nnamdi Show**
"A Shift in Cloud Computing" (guest on hour show)
http://thekojonnamdishow.org/shows/2011-06-14/shift-cloud-computing

27. May 13, 2011 **Discovery News** by Alyssa Danigelis
"Tech Turns Air into a Multi-touch screen", quoted.
http://news.discovery.com/tech/touch-screen-technology-zerotouch-110513.html

28. April 28, 2011 **Converge Magazine** by Tanya Roscorla
"Music Apps Take Top Prizes in U of Maryland Contest", discusses mobile app from the University of Maryland mobile app contest that I ran.

29. April 26, 2011 **Voice of America** by Do Noghte Sefr (in Persian)
"Mobility Initiative ابتکار تحرک"
http://www.youtube.com/donoghtesefr

30. April 24, 2011 **Washington Post**
"Business Rx: A jukebox democracy in search of voters", discusses mobile app from the University of Maryland mobile app contest that I ran.

31. February 25, 2011 **New Scientist** by Jim Giles and Jacob Aron
"Crowdsourced translations get the word out from Libya", discusses my MonoTrans project
http://www.newscientist.com/article/dn20174-crowdsourced-translations-get-the-word-out-from-libya.html

32. February 9, 2011 **DiamondBack, UMD Student Newspaper**
"Creativity at her fingertips" by Erin Egan
http://www.diamondbackonline.com/news/article_f7143841-131c-5695-a310-42596336345d.html

33. February 8, 2011 **WAMU Kojo Nnamdi Show**
"A Revolution in Tech Jobs? The Murky World of Online Labor" (hour show with me as only guest)
http://thekojonnamdishow.org/shows/2011-02-08/revolution-tech-jobs-murky-world-online-labor

34. November 23, 2010 **WAMU Kojo Nnamdi Show**
"The End of Email and other Tech Prognostications"
(hour show with me and one other guest)
http://thekojonnamdishow.org/shows/2010-11-23/end-email-and-other-tech-prognostications

35. November 9, 2010 **MIT Technology Review** by Erica Naone
"Gesturing at Your TV Isn't Ready for Prime Time" quotes me discussing Microsoft Kinect
http://www.technologyreview.com/computing/26691/

36. October 27, 2010 **MIT News** by Larry Hardesty
"Programming crowds" quotes me in analyzing Rob Miller's work
http://web.mit.edu/newsoffice/2010/programming-crowds-1027.html

37. October 2, 2010 **News 8 TV Austin**
"App Wrap: eReading for Kids" discussing StoryKit app for iPhone
http://www.news8austin.com/content/headlines/274426/app-wrap--ereading-for-kids

38. August 24, 2010 **WAMU Kojo Nnamdi Show**
"Automating Language Translation: The Future of a Unified Internet?" discussing my research and the general topic of crowdsourcing and translation.
http://thekojonnamdishow.org/shows/2010-08-24/automating-language-translation-future-unified-internet

39. May 4, 2010 **Technology Review**
"Redesigning the Web for Touch Screens"
http://www.technologyreview.com/printer_friendly_article.aspx?id=25236&channel=computing&section=

40. April 2010 **FutureGov Magazine** by Kelly Ng, Singapore
Description of ICDL for iPad application

41. April 17, 2010 **ABC 7 News, WLS-TV Chicago**
"Chicago Students Face Off in Battle of Books"
http://abclocal.go.com/wls/story?section=news/local&id=7392055

42. April 8, 2010 **Publisher's Weekly**
"The iPad Meets the Children's Book"
http://www.publishersweekly.com/article/455914-The_iPad_Meets_the_Children_s_Book.php?nid=2788&source=link&rid=16811925

43. April 3, 2010 **The Independent**, London
"Chlidren's book iPad apps offer multilingual tales, long-distance bedtime stories"
http://www.independent.co.uk/arts-entertainment/books/childrens-book-ipad-apps-offer-multilingual-tales-longdistance-bedtime-stories-1934847.html

44. January 28, 2010 **Baltimore Sun**, Baltimore, MD
"Apple unveils tablet computer" by Gus G. Sentementes
http://www.baltimoresun.com/business/technology/bal-bz.ipad28jan28,0,5120135.story

45. December 2009 **FutureGov Magazine** by Kelly Ng, Singapore
"Inside the Teacher's Lounge" covered Ben's keynote UNESCO talk in Hangzhou, China

46. November 20, 2009 **World Bank Blog**
http://blogs.worldbank.org/edutech/icdl-1

47. November 2, 2009 **Technology Review.com**
"First Test for Election Cryptography"
http://www.technologyreview.com/web/23836/

48. December 23, 2008 **WAMU Kojo Nnamdi Show**, Washington, DC
"Computer Guy"

49. September 18, 2008 **America.gov**
"Kids Help Design International Children's Digital Library" by Jeffrey Thomas
http://www.america.gov/st/educ-english/2008/September/200809181459141CJsamohT0.2946283.html
Also publised in **gulf-times.com** in Qatar
http://www.gulf-times.com/site/topics/article.asp?cu_no=2&item_no=245520&version=1&template_id=46&parent_id=26

50. April 25, 2008 **C|Net News.com**
"The Six Secrets of Mobile Computing Success" by Tom Krazit

51. February 8, 2008 **WYPR Maryland Morning**, Baltimore, MD
10 minute radio interview about usability of voting systems

52. January 30, 2008 **KCSN News** by Jessica Caldera
Short radio interview about usability of voting systems

53. January 29, 2008 **Technology Review.com** by Erica Naone
"Voting with (Little) Confidence"
http://www.technologyreview.com/Infotech/20122/

54. January 28, 2008 **ScienceDaily.com**
"Touch Screen Voting A Hit; Critics Miss Mark on Security, Study Says"
http://www.sciencedaily.com/releases/2008/01/080123170954.htm

55. January 26, 2008 **Newsweek** by Barrett Sheridan
"Like a Super Hero: Humans weren't made for scrolling and searching. We were made for zooming."
http://www.newsweek.com/id/105532/output/print

56. January 25, 2008 **Government Executive.com** by Gautham Nagesh
"Voters confused by e-voting machines, study finds"
http://www.govexec.com/dailyfed/0108/012508n1.htm

57. January 22, 2008 **WAMU Kojo Nnamdi Show**, Washington, DC
Thirty minute segment on "Technology User Frustrations – Spotlight on Cellphones"
http://wamu.org/programs/kn/08/01/22.php#19083

58. January 16, 2008 **KUOW, The Conversation**, Seattle, WA
The guest on an hour-long call-in talk show on the future of cellphones.
http://www.kuow.org/defaultProgram.asp?ID=14159

59. October 30, 2007 **WAMU Kojo Nnamdi Show**, Washington, DC
"Computer Guy", talking about software reliability

60. August 7, 2007 **WAMU Kojo Nnamdi Show**, Washington, DC
"Computer Guy", current tech events, iPhone, Tivo, and listeners email and calls
http://wamu.org/programs/kn/07/08/07.php

61. June 13, 2007 **New York Times** by John Markoff
    ”That iPhone has a keyboard, but it’s not mechanical”
    http://www.nytimes.com/2007/06/13/technology/13phone.ready.html

62. June 5, 2007 **WAMU Kojo Nnamdi Show**, Washington, DC
    “Computer Guy”, Microsoft Surface, cell phone problems, and listeners email and calls
    http://wamu.org/programs/kn/computerguys/07/cg070605.php

63. April 3, 2007 **WAMU Kojo Nnamdi Show**, Washington, DC
    “Computer Guy”, Physical and virtual convergence, and listeners email and calls
    http://wamu.org/programs/kn/computerguys/07/cg070403.php

64. March 17, 2007 **Science News** weekly magazine, by Ivars Peterson
    “Games Theory”, several quotes by me on article about von Ahn’s games.
    http://www.sciencenews.org/articles/20070317/bob9.asp

65. January 18, 2007 **Wall Street Journal**, by Jeremy Wagstaff
    “The March of Time”, covering DateLens

66. December 31, 2006 **Associated Press**, by Brian Bergstein
    “Low-Cost Laptop Could Transform Learning”
    http://www.washingtonpost.com/wp-dyn/content/article/2006/12/31/AR2006123100380.html
    AP story picked up in 175 locations, including:

    - Washington Post
    - BusinessWeek
    - Chicago Tribune
    - Boston Globe
    - ABC News
    - CNN
    - FOX News
    - Eyewitness News
    - Forbes
    - BBC News, UK
    - Sydney Morning Herald, Australia
    - The Age, Australia
    - Economic Times, India

67. December 5, 2006 **WAMU Kojo Nnamdi Show**, Washington, DC
    “Computer Guy”, Vista, holiday tech gifts, and listeners email and calls
    http://www.wamu.org/programs/kn/06/12/05.php#12452

68. September 22, 2006 **Salon.com** by Katharine Mieszkowski
    “Written out of the story”, discussing write-in votes using the Hart eSlate system
    http://www.salon.com/news/feature/2006/09/22/delay_write_in/index_np.html

69. May 2, 2006 **WAMU Kojo Nnamdi Show**, Washington, DC
    “Computer Guy – life in the fast lane”, discussing broadband at home
    http://www.wamu.org/programs/kn/06/05/02.php#10686

70. April 23, 2006 **Pittsburgh Post-Gazette** by Mark Roth
    “Experts see computers getting bigger and smaller at the same time”
    http://www.post-gazette.com/pg/06113/684425-96.stm

71. March 9, 2006 **Baltimore Sun** by Mike Himowitz
    “PhotoMesa a nifty way to organize photographs”
    http://www.baltimoresun.com/technology/bal-bz.himowitz09mar09,0,3518441.column

72. February 21, 2006 **WAMU Kojo Nnamdi Show**, Washington, DC
    “Wiki Sites”
    http://www.wamu.org/programs/kn/06/02/21.php#10383

73. February 3, 2006 **Baltimore Sun** by Frank D. Roylance
"Spreading the e-word" (quoted about Sony's new ebook reader e-paper)
http://www.baltimoresun.com/news/health/bal-hs.eink03feb03,1,3010066.story

74. January 13, 2006 **Washington Business Journal** by Jennifer Nycz-Conner
"What was I doing, again?"
http://www.bizjournals.com/washington/stories/2006/01/16/focus1.html

75. November 18, 2005 **c|net News.com** by Stefanie Olsen
"The 'millenials' usher in a new era" (about ICDL)
http://news.com.com/The+millennials+usher+in+a+new+era/2009-1025_3-5944666.html?tag=nefd.lede

76. September, 2005 **Chicago Parent** by Jane Huth
"Screen time=reading time"
http://www.chicagoparent.com/main.asp?SectionID=10&SubSectionID=32&ArticleID=529&TM=67415.63

77. September 22, 2005 **Delphos Herald**
"Site Seeing"
http://www.delphosherald.com/page2.php?story=8655&archive=

78. April, 2005 **Chicago Parent** by Judy Belanger
"Explore the world by turning pages"
http://www.chicagoparent.com/main.asp?SectionID=10&SubSectionID=33&ArticleID=306&TM=67012.6

79. April 5, 2005 **EE Times** by Nicolas Mokhoff
" Microsoft touts 'thumb-as-stylus' interface progress"
http://www.eetimes.com/showArticle.jhtml;jsessionid=NHVZOY3L1AQWUQSNDBGCKH0CJUMEKJVN?articleID=160500234
Also picked up by **Information Week**

80. March 10, 2005 **folha equilibrio (Brazil)** by Sérgio Rizzo
"Cibertentações" (article about computer-based distraction, describing some of my work.)

81. March, 2005 **Radio City (Ecuador) / BBC Affiliate**
5 minute radio interview (performed in English, translated into Spanish)

82. March 1, 2005 **The Statesman (India)** by Stanley Theodore
"Webcrawler: All About E-Attention Deficit Disorder"
http://www.thestatesman.net/page.news.php?clid=24&theme=&usrsess=1&id=70119

83. February 28, 2005 **Washington Times** by Ann Geracimos
"New Chapter in Online Books"
http://washingtontimes.com/metro/20050227-101610-1015r.htm

84. February 18, 2005 **North Carolina State Technician** by Danny Frye
"Research targets computer distraction such as AIM"
http://technicianonline.com/story.php?id=011167

85. February 13, 2005 **Bloomberg Radio, "Simply Put"** by Michael Goldman & Tom Moroney
9 minute interview discussing attention and interruptions on the computer

86. February 10, 2005 **New York Times** by Katie Hafner
"You There, at the Computer: Pay Attention"
http://www.nytimes.com/2005/02/10/technology/circuits/10info.html
Also picked up by
    a. **International Herald Tribune (France)**
    b. **ABS CBN News (Philippines)**
    c. **CNET News.com**
    d. **Spartanburg Herald (SC)**
    e. **Wilmington Morning Star (NC)**
    f. **Minneapolis Star Tribune (MN)**

87. Nov 11, 2004 **Maryland Public Television** by Frank Batavick
"Message in a Bottle", Bob the vid-tech guy 30 minute special including 5 minute segment of Allison Druin and me explaining email and instant messaging to children.

88. May 7, 2004 **Baltimore Sun** by Elizabeth Schuman
"Research Lab Crosses Cultures"

89. October 20, 2003 **The Feature** by Jeff Goldman
"A View Into Your Phone"
http://www.thefeature.com/article?articleid=100146

90. October 10, 2003 **The Independent** by Charles Arthur
"Treemap Offers a New Way of Visualizing Complex Data. Nothing Beats it for Simplicity and the "wow!" effect when you first use it."
http://news.independent.co.uk/digital/features/story.jsp?story=451099

91. July, 2003 **Higher Learning – Technology Serving Education**
"Web Sites: The International Children's Digital Library"

92. July 7, 2003 **Pittsburgh Post-Gazette** by Karen MacPherson
"Web Site Invites Children to Read Online: International Children's Digital Library Caters to Young Around the Globe"

93. June 15, 2003 **San Antonio News 9** by Michael Garfield
"Website a Fun Way to Encourage Kids to Read"

94. April 11, 2003 **San Jose Mercury News** by Dan Gillmor
"Designing New Handhelds to Improve Interactions Between Humans, Computers"
Also picked up by **New Jersey Star Ledger (NJ)**

95. February 12, 2003 **Tech TV Live** by Peter Barnes
Also on **abcnews.com**
"Easy Online Reader: An International Online Nook for Children's Books"

96. January 17, 2003 **Voice of America TV** by Larry Clamage
4.5 minute video of children's design team focusing on ICDL

97. December, 2002 **Sun's Java Website**
ICDL Linked to from http://java.sun.com/industry/

98. December 17, 2002 **Associated Press**
Picture of Ben Bederson w/ Bill Gates at Microsoft about DateLens project
    a. **Seattle Post Intelligencer (WA)**
    b. **Times Daily (AL)**
    c. **Sarasota Herald-Tribute (FL)**
    d. **Naples Daily (FL)**

99. December 16, 2002 **Baltimore Sun** by Alex MacGillis
"Two Study Intricacies of Voting Machines"
Also picked up by AP, excerpts in:
    a. **USA Today**
    b. **WMAR (MD)**
    c. **WBAL-TV (MD)**
    d. **News Channel 8.net**

100. December 12, 2002 **Philadelphia Inquirer** by Joyce Kasman Valenza
"tech.life @ school | New virtual library offers children much"

101. December 10, 2002 **Le Monde (France)** by Chantal Dussuel
"Livres en ligne pour internautes on herbe"

102. December 10, 2002 **Christian Science Monitor**
News in Brief – ICDL

103. December 5, 2002 **New York Times** by Lisa Guernsey
"Online Library Project Plans a Digital and Cultural Trove for Children"

104. December 1, 2002 **Die Burger (South Africa)**
"Paragrawe"

105. November 30, 2002 **The Vancouver Sun (Canada)**
”Book Endz: Free Kid’s Books”

106. November 30, 2002 **La Vanguardia (Spain)**
”Nuevos Proyectos: TalentMatch.com, International Children’s Digital Library SoapCity”

107. November 27, 2002 **USA Today** by Karen Thomas
”World Books, Children Click”

108. November 27, 2002 **The Ohama World-Herald**
”TechBytes: Digital Library Links Kids to Other Cultures”

109. November 27, 2002 **Education Week**
”Internet Library for Children Invites the World to Read”

110. November 26, 2002 **The Gold Coast Bulletin (Australia)**
”The Net: News Bytes”

111. November 25, 2002 **intern.de (Germany)**
”Kinderbibliothek”

112. November 25, 2002 **Seattle Post-Intelligencer**
”Kids Books Now Online”

113. November 21, 2002 **AP Wire** by Sam Hannel
”Web Site to Give Free Access to Children’s Books”
    a. **ABCNews.com**
    b. **The Age (Australia)**
    c. **Ananova.com (UK)**
    d. **Asia Pacific Media Network**
    e. **The Baltimore Sun**
    f. **Globetechnology.com (Canada)**
    g. **KTVU 2 News (Bay Area)**
    h. **Indiana Gazette**
    i. **MSNBC.com**
    j. **Newsday.com**
    k. **Rapid City Journal**
    l. **San Jose Mercury News**
    m. **Sarasota Herald-Tribune (Florida)**
    n. **Santa Fe New Mexican**
    o. **Seattle Post-Intelligencer**
    p. **Sydney Morning Herald (Australia)**
    q. **Waterloo/Cedar Falls**
    r. **WFTV (Florida)**

114. November 21, 2002 **24ur.com (Slovenia)**
”Knjige brezplacno na internetu”

115. November 21, 2002 **Courier Mail (Australia)**

116. November 21, 2002 **United Press International (UPI)**
”New Online Library for Kids Launched”

117. November 21, 2002 **Washington Post (.COM Column)** by Leslie Walker
”A Library for Young Browsers”
    a. **International Herald Tribute**
    b. **SFGate.com (San Francisco)**

118. November 21, 2002 **Internet Magazine**
”Site Offers Free Access to Kids Books”

119. November 20, 2002 **Magasinet (Norway)**
”Lager verdensbarnebibliotek”

120. November 20, 2002 **Fox 5 TV News** by John Henrehan
Live 1.5 minutes on 5:00pm news

121. November 18, 2002 **All Things Considered on NPR** by David Kestenbaum
”Library for Kids Goes Online” (11 minutes)

122. October, 2002 **Digital Computer Magazine**
Review of PhotoMesa

123. September 23, 2002 **ComputerSweden** by Anders Lotsson
”Square Zoom in the Hand”

124. August 19, 2002 **Ohio Repository** by Joan Renner
”Ensuring validity is a big concern in electronic voting”

125. August 18, 2002 **Ohio Repository** by Joan Renner
”Voting test shows pros, cons”

126. August 12, 2002 **eWeek**, by Anne Chen
”DateLens Stays Organized in C#”

127. August 5, 2002 **Grid Today**
”Bill Gates Highlights Academic Collaboration Key to Future”

128. July 29, 2002 **eWeek**, by Anne Chen
”Gates: .NET Won’t Happen Overnight”

129. July 29, 2002 **InfoWorld**, by Matt Berger
”Gates, academics joins on security, shared source”

130. July 29, 2002 **NetworkWorldFusion**, by Matt Berger
”Gates, academics joins on security, shared source”

131. May 9, 2002 **Washington Post (.COM Column)**, by Leslie Walker
”A Visual Rather Than Verbal Future”

132. May 9, 2002 **Washington Post Website**, by Eleanor Hong
”Human-Computer Interaction Lab at the University of Maryland” – Interview with me, Allison Druin, and Ben Shneiderman.

133. August 1, 2001 **Sun Microsystems Java Website**, by Jon Byous
”View With a Zoom: Browse and Zoom Digital Images in One Application” describes PhotoMesa and my treemap algorithms.

134. July 2, 2001 **ComputerWorld** by Sami Lais
”Treemaps Bloom” describes my photo browser application PhotoMesa which uses Jazz

135. June 4, 2001 **ComputerWorld** by Sami Lais
”Software for the 4th Dimension” describes TimeSearcher which uses Jazz

136. August 12, 2000 **New Scientist Magazine**
”Maximizing MinimalisM”, an article Zoomable User Interfaces, KidPad, and Fisheye Menus

137. Fall, 2000 **College Park**, by Tom Ventsias
”Zooming Ahead”, an article about Zoomable User Interfaces

138. June 26, 2000 **ComputerWorld**, by Sami Lais
”Zoomin’ Ahead”, an article about Zoomable User Interfaces and Fisheye Menus

139. September, 1999 **Sun Microsystems Java Website**, by Jon Byous
An interview with me under their face-to-face column.

140. December 21, 1998 **Baltimore Sun**
Reprinted in New York Newsday, Dec. 30, 1998
“Children first: In designing toys, one lab turns to the experts in the field.”

141. April 4, 1997 **The Chronicle of Higher Education** by Jeffrey R. Young
"New Ways of Organizing Data Could Change Nature of Computers"

142. February, 1997 **Nov'Art**
a French Magazine sponsored by Art3000, a society devoted to integration of technology and art.

143. October 23, 1996 **The New York Times Online (CyberTimes)** by Ashley Dunn
"Seeing the Forest of Knowledge for the Trees of Data"

144. June, 1995 **The X Advisor**, by Gary Welz
"Peripheral Visions: Zooming Through Information Space on Pad++"

3. TEACHING AND ADVISING

A. COURSES TAUGHT
i. General

Fall 2015	*Paths to CS* (CMSC198C/D/E) – 96 Students	
Fall 2013	*Paths to CS* (CMSC198C/D/E, 1-3 credits) – 36 Students	
	CMSC198C	
	Student Evaluations	(Scale: 0 Poor – 4 Excellent)
	Students "learned a lot":	3.6 (College comparison: 2.8)
	Effective teacher:	3.9 (College comparison: 2.9)
	CMSC198D	
	Student Evaluations	(Scale: 0 Poor – 4 Excellent)
	Students "learned a lot":	3.8 (College comparison: 2.8)
	Effective teacher:	4.0 (College comparison: 2.9)
Fall 2012	*Tech for CS Startups – Team taught* (CMSC 498E, 1 credit) – 19 Students	
	Student Evaluations	(Scale: 0 Poor – 4 Excellent)
	Students "learned a lot":	3.0 (College comparison: 3.2)
	Effective teacher:	3.7 (College comparison: 2.9)
Spring 2012	*Reading Seminar: Future of HCI – Team taught* (CMSC 838B, 1 credit) – 13 Students	
Fall 2011	*Social Computing Seminar* (CMSC 838B, 3 credits) – 20 Students	
	Student Evaluations	(Scale: 0 Poor – 4 Excellent)
	Students "learned a lot":	3.7 (College comparison: 3.2)
	Effective teacher:	3.8 (College comparison: 3.2)
Fall 2011	*Intro to Human-Computer Interaction* (CMSC 434) – 37 Students	
	Student Evaluations	(Scale: 0 Poor – 4 Excellent)
	Students "learned a lot":	3.5 (College comparison: 3.2)
	Effective teacher:	3.5 (College comparison: 3.0)
Spring 2011	*Intro to Human-Computer Interaction* (CMSC 434) – 42 Students	
	Student Evaluations	(Scale: 0 Poor – 4 Excellent)
	Students "learned a lot":	2.9 (College comparison: 3.2)
	Effective teacher:	3.0 (College comparison: 3.0)
Fall 2010	*Reading Seminar in Human Computation* (CMSC 838B, 1 credit) – 9 Students	
	Student Evaluations	(Scale: 0 Poor – 4 Excellent)
	Students "learned a lot":	3.8 (College comparison: 3.2)
	Effective teacher:	3.9 (College comparison: 3.5)
Fall 2010	*Digital Cultures and Creativity* (HDCC 105, co-taught) – 56 Students	
	Student Evaluations	(Scale: 0 Poor – 4 Excellent)
	Students "learned a lot":	2.4 (College comparison: 2.5)
	Effective teacher:	3.2 (College comparison: 3.4)
Spring 2010	*Object-Oriented Programming I* (CMSC 131H) – 10 Students	
	Student Evaluations	(Scale: 0 Poor – 4 Excellent)
	Students "learned a lot":	3.8 (College comparison: 2.9)
	Effective teacher:	4.0 (College comparison: 3.0)
Fall 2009	*Intro to Human-Computer Interaction* (CMSC 434) – 39 Students	
	Student Evaluations	(Scale: 0 Poor – 4 Excellent)
	Students "learned a lot":	3.3 (College comparison: 3.2)
	Effective teacher:	3.5 (College comparison: 3.0)

Spring 2008	*Intro to Human-Computer Interaction* (CMSC 434) – 32 Students	
	Student Evaluations	(Scale: 0 Poor – 4 Excellent)
	Students "learned a lot":	3.1 (College comparison: 3.1)
	Effective teacher:	3.2 (College comparison: 3.0)
Spring 2005	*Developing User Interfaces* (CMSC 498B) – 14 Students	
	Student Evaluations	(Scale: 0 Poor - 4 Excellent)
	Course quality:	3.6
	Instructor's teaching:	3.8
Spring 2004	*Object Oriented Programming I* (CMSC 131) – 75 Students	
	Student Evaluations	(Scale: 0 Poor - 4 Excellent)
	Course quality:	3.0
	Instructor's teaching:	2.9
Spring 2003	*Information Visualization* (CMSC 828B) – 17 Students	
	Student Evaluations	(Scale: 0 Poor - 4 Excellent)
	Course quality:	3.1
	Instructor's teaching:	3.4
Spring 2002	*Developing User Interfaces* (CMSC 498B) – 25 Students	
	Student Evaluations	(Scale: 0 Poor - 4 Excellent)
	Course quality:	3.6
	Instructor's teaching:	3.9
Fall 2001	*Human Computer Interaction* (CMSC 434/828S) – 50 Students	
	Student Evaluations	(Scale: 0 Poor - 4 Excellent)
	Course quality:	3.5
	Instructor's teaching:	3.6
Spring 2001	*Information Visualization*	
	Taught by Catherine Plaisant and Ben Shneiderman due to my illness	
Fall 2000	*Human Computer Interaction* (CMSC 434/828S) – 50 Students	
	No evaluation due to my illness	
Spring 2000	*Computer Graphics* (CMSC 427) – 45 students	
	Student Evaluations	(Scale: 0 Poor - 4 Excellent)
	Course quality:	3.4
	Instructor's teaching:	3.3
Fall 1999	*Human Computer Interaction* (CMSC 434/828S) – 44 Students	
	Student Evaluations	(Scale: 0 Poor - 4 Excellent)
	Course quality:	3.9
	Instructor's teaching:	3.9
Spring 1999	*Zoomable User Interfaces* (CMSC 838B) – 15 Students	
Fall 1998	*Software Engineering* (CMSC 435) – 45 students	
	Student Evaluations	(Scale: 0 Poor - 4 Excellent)
	Course quality:	3.6
	Instructor's teaching:	3.5
Spring 1998	*Computer Graphics* (CMSC 427) – 24 students	
	Student Evaluations	(Scale: 0 Poor - 4 Excellent)
	Course quality:	3.7
	Instructor's teaching:	3.7
Spring 1997	*Software Engineering* (CS460) @ UNM	
	(Didn't receive evaluations)	
Fall 1996	*Introduction to Data Structures* (CS251) - 100 Students @ UNM	
	(Didn't receive evaluations)	

Spring 1996	*Human Computer Interaction* (CS462) @ UNM	
	Student Evaluations	(ICES scale: 1 poor - 6 excellent)
	Course content:	5.2
	Instructor:	5.5
	Course in general:	5.2
Spring 1996	*Computers & Society* (CS491/591) @ UNM	
	Introduced this course for the first time in the CS dept. 1 credit seminar	
	Student Evaluations	(ICES scale: 1 poor - 6 excellent)
	Course content:	4.9
	Instructor:	4.8
	Course in general:	4.8
Spring 1996	Taught one week *Computer Ethics* @ UNM section of a new five week introductory class on computing at UNM (CS101). Did this two times.	

ii. Specialized

Fall 2016	*Learning Analytics Research Group (TLTC 708)* – 1 credit, 3 students, 20 participants	
Spring 2016	*Learning Analytics Research Group* – 0 credits, 30 participants	
Fall 2015	*Learning Analytics Reading Group* – 0 credits, 20 participants	
Spring 2015	*Learning Analytics Reading Group* – 0 credits, 20 participants	
Fall 2003	*Readings in HCI Seminar* (CMSC 838B) – 1 credit, 13 students	
	Student Evaluations	(Scale: 0 Poor - 4 Excellent)
	Course quality:	3.9
	Instructor's teaching:	3.8
Fall 2001	*Readings in HCI Seminar* (CMSC 838B) – 1 credit, 12 students	
	Student Evaluations	(Scale: 0 Poor - 4 Excellent)
	Course quality:	3.8
	Instructor's teaching:	3.8
Fall 2000	*Readings in HCI Seminar* (CMSC 838B) – 1 credit, 15 students	
Fall 1999	*Readings in HCI Seminar* (CMSC 838B) – 1 credit, 6 students	
Spring 1999	*Zoomable User Interfaces* (CMSC 838B) – 15 students	
	Student Evaluations	(Scale: 0 Poor - 4 Excellent)
	Course quality:	3.5
	Instructor's teaching:	3.2
Fall 1998	*Readings in HCI Seminar* (CMSC 838B) - 1 credit, 9 students	
	Student Evaluations	(Scale: 0 Poor - 4 Excellent)
	Course quality:	4.0
	Instructor's teaching:	3.8

F. ADVISING RESEARCH DIRECTION
i. Undergraduate

	Independent Study Advisor:
2013	Andrej Resevic – new Paths to Computer Science course
2012 – 2013	Danny Michaelis – new Paths to Computer Science course
2010 – 2011	Jonathan Speiser Worked on tournament programmer in educational technologies group
2003-2004	Christian Klein Studied effect of animation when scrolling while reading

2000 – 2002	Rob Sherman Customized undergraduate degree in HCI & Law – focused on voting systems
Fall 2001	Steve Betten Visualizations for real-time monitoring
Spring 2000/ Fall 2000	Beth Weinstein Geographical interfaces for digital library for children
Spring 1999	Nuno Pereria End-user customizable systems
Spring 1996	Philip Eckenroth and Mike Tipping Built a 3D modeling system
Fall 1995	Josh Saiz Novel searching techniques in Pad++ (dynamic indicators)

ii. Master's

	Thesis Committee:
2005	Julie Staub in Applied Math. Research on Chaum's scheme for encrypted voter receipts.
1999	George Ziets in Psychology. Advisor is Kent Norman. Research is on gauge design for multiple orders of magnitude.
	Independent Study Advisor:
2013	Alina Goldman (iSchool) – Motivation in a self-paced computer science course
2012	Adam O'Sullivan – Computer vision for relative phone location
2000	Stephanie Thibeault (Dance Dept.) Technology and dance
1996	Ellen Killion Built a software library access tool in Pad++
1995	Tom Claus Worked on KidPad
1995	Sam Cancilla Shared calendar application in Pad++
1995	David Rogers Tossing for user interfaces
1995	Richard Bleakman Interfaces for teaching genetic algorithms
1995	Tom Claus Worked on Pad++

iii. Doctorate

	Dissertation Advisor:
2017	Tak Yeon Lee, Ph.D. (2017) in Computer Science. "Toward Symbiotic Human-AI Interaction Focusing on Programming by Example". **Currently at Adobe Research.**
2016	Adil Yalcin, Ph.D. (2016) in Computer Science. "Towards Rapid, Effective, and Expressive Visual Data Exploration". **Currently founding startup to commercialize his dissertation research - https://keshif.me/.**

2014	Alex Quinn, Ph.D. (2014) in Computer Science. "Crowdsourcing Decision Support: Frugal Human Computation for Efficient Decision Input Acquisition". **Currently Assistant Professor of ECE at Purdue.**
2012	Chang Hu, Ph.D. (2012) in Computer Science. "Crowdsourced Monolingual Translation". **Currently at Microsoft.**
2007	Amy Karlson, Ph.D. (2007) in Computer Science. Research on personal information management. **Winner of Microsoft Graduate Fellowship. Two CHI papers nominated for best paper. Worked at Microsoft Research for several years.**
2006	Bongshin Lee, Ph.D. (2006) in Computer Science. "Interactive Visualization for Trees and Graphs". **Co-first place winner of IEEE InfoVis 2004 Contest. Currently at Microsoft Research.**
2005	Hilary Hutchinson, Ph.D. (2005) in Computer Science. "Children's Interface Design for Searching and Browsing". **Awarded UMD CS Minker Fellowship. Awarded NSF Graduate Fellowship. Currently at Google.**
2005	Bongwon Suh, Ph.D. (2005) in Computer Science. "Image Management Using Pattern Recognition". **Worked at PARC, then at Adobe Research, now Assoc. Prof. at Seoul National University (Korea).**
2003	Lance Good, Ph. D. (2003) in Computer Science. "Zoomable User Interfaces for the Authoring and Delivery of Slide Presentations". **Worked at PARC as researcher for several years, now at Google.**
2003	Juan Pablo Hourcade, Ph.D. (2003) in Computer Science. "User Interface Technologies and Guidelines to Support Children's Creativity, Collaboration, and Learning". **Currently Assoc. Prof. of Computer Science at the University of Iowa.**
1998	Jason Stewart, Ph.D. (1998) in Computer Science at UNM. Research is on collaborative user interfaces for children using Pad++. **Awarded 1995 DEC Fellowship at UNM.**
	Dissertation Committee:
2020	Virginia Leigh Byrne (2020) in Education. Advisor is Diane Jass Ketelhut. "The Chilling Effect of Cyberbullying on Women's Social Presence in Online Discussions"
2019	Zhenpeng Zhao (2019) in Computer Science. Advisor is Niklas Elmqvist. "Data-Driven Storytelling for Casual Users"
2016	Uran Oh, Ph.D. (2016) in Computer Science. Advisor is Leah Findlater. "Accessible On-Body Interaction for People with Visual Impairments"
2016	Kotaro Hara, Ph.D. (2016) in Computer Science. Advisor is Jon Froehlich. "Scalable methods to collect and visualize sidewalk accessibility data for people with mobility impairments"
2014	Aaron Dinin, Ph.D. (2014) in English. Advisor is Martha Nell Smith. "Hacking Literature: A Study in the Technology of Language."
2014	Brian Danielak, Ph.D. (2014) in College of Education. Advisor is Andy Elby. "How Electrical Engineering Students Design Computer Programs."
2013	Irene Eleta Mogollon, Ph.D. (2013) in iSchool. Advisor is Jen Golbeck. "Multilingual use of Twitter: Language Choice and Language Bridges in a Social Network."
2013	John Alexis Guerra Gomez, Ph.D. (2013) in Computer Science. Advisor is Ben Shneiderman. "Exploring Differences in Multivariate Datasets Using Hierarchies: An Interactive Information Visualization Approach"
2013	Sureyya Tarkan, Ph.D. (2013) in Computer Science. Advisor is Ben Shendierman. "Interactive Visual Displays for Results Management in Complex Medical Workflows"
2010	Taowei David Wang, Ph.D. (2010) in Computer Science. Advisor is Ben Shneiderman. "Interactive Visualization Techniques for Searching Temporal Categorical Data"

2009	Jerry Fails, Ph.D. (2009) in Computer Science. Advisor is Allison Druin. "Mobile Collaboration for Young Children"
2008	Chunyuan Liao, Ph.D. (2008) in Computer Science. Advisor is Francois Guimbretiere. "PapierCraft: A New Paper-Based Interface To Support Interaction With Digital Documents"
2008	Aleks Aris, Ph.D. (2008) in Computer Science. Advisor is Ben Shneiderman. "Visualization & Exploring Networks Using Semantic Substrates"
2008	Adam Perer, Ph.D. (2008) in Computer Science. Advisor is Ben Shneiderman. "Integrating Statistics and Visualization to Improve Exploratory Social Network Analysis"
2008	Walky Rivadeneira, Ph.D. (2008) in Psychology. Advisor is Kent Norman. "Tag Clouds: How Format and Categorical Structure Affect Categorization Judgement"
2007	Matthias Mayer, Ph.D. (2007) in Dept. Informatik, Universität Hamburg where I was an outside reader. Advisor is Prof. Dr. Arno Rolf. "Visualizing Web Sessions".
2007	Leslie Eugene Chipman, Ph.D. (2007) in Computer Science. Advisor is Allison Druin. "Collaborative Technology for Young Children's Outdoor Education".
2006	Haibin Ling, Ph.D. (2006) in Computer Science. Advisor is David Jacobs. "Techniques for Image Retrieval: Deformation Insensitivity and Automatic Thumbnail Cropping".
2005	Jinwook Seo, Ph.D. (2005) in Computer Science. Advisor is Ben Shneiderman. "Information Visualization Design for Multidimensional Data: Integrating the Rank-By-Feature Framework with Hierarchical Clustering".
2005	Jen Golbeck, Ph.D. (2005) in Computer Science. Advisor is Jim Hendler. "Computing and Applying Trust in Web-Based Social Networks".
2003	Harry Hochheiser, Ph.D. (2003) in Computer Science. Advisor is Ben Shneiderman. Research on interfaces for time-series data.
2002	Jenny Sterling, Ph.D. (2002) in Music. Advisor is Laszlo Payerle. Research on educational software she developed to teach undergrad music form. She won the campus award on educational technologies from the Center for Teaching Excellence.
2001	Mike Beynon, Ph.D. (2001) in Computer Science. Advisor is Joel Saltz. Research on filter-based programming model for grid computing.
2001	Angela Boltman, Ph.D. (2001) in Education, Advisor is Allison Druin. Research on KidPad's effect on children's storytelling.
2001	Jeff Heflin, Ph.D. (2001) in Computer Science. Advisor is Jim Hendler. Research on the semantic web.
2001	Egemen Tanin, Ph.D. (2001) in Computer Science. Advisor is Ben Shneiderman. Research on browsing large online databases using exploratory overviews.
2000	Vasanth Philomin, Ph.D. (2000) in Computer Science. Advisor is Larry Davis. Research on real-time computer vision for in-car navigation and warning systems.
2000	Byoung-Kee Yi, Ph.D. (2000) in Computer Science. Advisor is Christos Faloutsos. Research on similarity search and data mining in time-sequence databases.
2000	Chris North, Ph.D. (2000) in Computer Science. Advisor is Ben Shneiderman. Research on tight coupling between different visualizations.
1999	Richard Potter, Ph.D. (1999) in Computer Science. Advisor is Ben Shneiderman. Research on pixel data access for end-user customization.
1999	Harald Winroth, Ph.D. (1999) in Computer Science at the Royal Institute of Technology (KTH) in Stockholm, SWEDEN. I was invited to be the *opponent*. Advisor is Jan-Olof Eklundh Research on dynamic projective geometry.

1999	Ismail Haritaoglu, Ph.D. (1999) in Computer Science. Advisor is Larry Davis. Research on real-time computer vision for tracking people.
1999	Zhijun Zhang, Ph.D. (1999) in Computer Science. Advisors are Vic Basili and Ben Shneiderman. Research on perspective-based usability inspection techniques.
1998	Elaine Raybourne, Ph.D. (1998) in Communication and Journalism at the University of New Mexico. Advisor is Ed Rogers. Dissertation is on the use of MUDs for anonymous role-playing to teach about issues of culture, identity, and power.
1998	Fan-Tao Pu, Ph.D. (1998) in Computer Science, Advisor is David Mount. Research on data structures for view-independent 3D object visibility detection.
1998	Eser Kandogan, Ph.D. (1998) in Computer Science, Advisor is Ben Shneiderman. Research on a technique for window management – elastic windows.
1996	Eric Freeman, Ph.D. (1996) in Computer Science at Yale University. Advisor is David Gelernter. "Lifestreams", a computer interface that eliminates the need for filenames by indexing all files and connecting applications to a database.
	Proposal Committee:
2019	Maddalena Romano in Geographic Information Systems (City College of New York) Advisor is Carsten Kessler. "Distributed WiFi for Distributed GIS"
2018	Virginia Leigh Byrne in Education. Advisor is Diane Jass Ketelhut. "The Chilling Effect of Cyberbullying on Women's Social Presence in Online Discussions"
2017	Zhenpeng Zhao in HCI. Advisor is Niklas Elmqvist. "A Framework of Media Types for Data-Driven Storytelling"
2012	Irene Eleta in iSchool. Advisor is Jen Golbeck. "Multilingual Use of Twitter: Language Choice and Language Bridges in a Social Network"
2012	John Alexis Guerra Gómez in Computer Science. Advisor is Ben Shneiderman. "Exploring Differences in Trees by Comparing Structure and Node Value Changes: An Interactive Information Visualization Approach"
2011	Alex Quinn in Computer Science. Advisor is me. "Crowdsourcing Decision Support: Frugal Human Computation for Efficient Decision Input Acquisition"
2011	Sureyya Tarkan in Coputer Science. Advisor is Ben Shneiderman. "Enhancing Timely Management of Workflow with Interactive Visual Displays and Actions for Situation Awareness Processing"
2010	Chris Hayden in Computer Science. Advisors are Mike Hicks and Jeff Foster. "Clear and Correct Runtime Upgrades"
2010	Chang Hu in Computer Science. Advisor is me. "Translation by Collaboration Between Monolinguals"
2008	Walky Rivadeneira in Psychology. Advisor is Kent Norman. "Tag Clouds: How Format and Categorical Structure Affect Categorization Judgement"
2007	Jerry Fails in Computer Science. Advisor is Allison Druin. Research on children's collaborative mobile interfaces.
2005	Haibin Ling in Computer Science. Advisor is David Jacobs. Research on invariance in computer vision.
2001	Jaime Montemayor in Computer Science. Advisor is Allison Druin. Research on physical programming for children.
2001	Harry Hochheiser in Computer Science. Advisor is Ben Shneiderman. Research on interfaces for time-series data.

2001	Angela Boltman in Education. Advisor is Allison Druin. Research on the technology of storytelling.
2000	Jeff Heflin in Computer Science. Advisor is Jim Hendler. Research on knowledge representation on the Web.
1998	Egemen Tanin in Computer Science. Advisor is Ben Shneiderman. Research on query previews.
1998	Thanarat Horprasert in Computer Science. Advisor is Larry Davis. Research on real-time computer vision.
1998	Vasanth Philomin in Computer Science. Advisor is Larry Davis. Research on real-time computer vision.
1998	Chris North in Computer Science. Advisor is Ben Shneiderman. Research on Tightly Coupled Windows.

iv. Post-doc

2009-2012	Tom Yeh working in applied computer vision and HCI (co-mentored with Larry Davis). **Currently at Univ. of Colorado, Boulder.**

4. SERVICE

A. PROFESSIONAL

i. Office and Committee Memberships

2015 – 2018	SIGCHI Adjunct Chair for Awards
2015	TOCHI Special Issue Editor
2015	Learning @ Scale Program Committee
2014	Learning @ Scale Program Committee
2011	CHI 2011 Papers Subcommittee Co-chair
2010	CHI 2010 Papers Subcommittee Co-chair
2005 – 2016	US ACM Committee member
2004 – 2007	SIGCHI Adjunct Chair for US Public Policy Committee
2000	CHI Conference Video Paper Co-Chair
1999	CHI Conference Video Paper Chair
1998	UIST Technical Program Committee
1998	UIST Conference Panel Chair, Technical Program Committee
1998	CHI Conference Video Co-Chair.

ii. Editorial Boards

2015 – 2018	**PeerJ Computer Science**, PeerJ
2012 – 2018	**Transactions on Computer-Human Interaction (TOCHI)**, ACM Press
2007 – 2014	**Foundations and Trends in HCI** (Editor-in-chief), NOW Publishers
2002 – 2016	**Information Visualization**, Palgrave Press

iii. Advisory Boards

2016 – 2018	**Coursera**, Mountain View, CA Coursera Council advisory group
2012 – 2015	**Barrie School**, Silver Spring, MD Board of Trustees for this independent K-12 school
	2013 – 2016: Secretary

2003	**Microsoft Research**, Redmond, WA University Relations Faculty Advisory Board

iv. Other non-University committees, commissions, panels, etc.

2012	**Judge for Joan Ganz Cooney, National STEM Video Game Challenge**

vi. Paid Consultancies

2022 – present	**IT Park University** Honorary Rector to help lead new tech educational institution	**Tashkent, Uzbekistan**
2022 – present	**EPAM** Chief Academic Advisor - help with corporate educational programs and creation of new universities	**Newtown, PA**
2020 – 2022	**Logitech** Consultant to help with new product development	**Seattle, WA**
2009 – present	**Consulting as an expert witness** largely for patent infringement cases for a range of clients	**Windsor, MA**
2006 – 2014	**Zumobi, Inc.** Founder of startup company to create mobile information services software	**Seattle, WA**
2008 – 2009	**Microsoft Research** Consultant to help with products related to my research	**Seattle, WA**
2005 – 2009	**Hillcrest Laboratories, Inc.** Advisor to help this start-up develop novel in-home entertainment system	**Rockville, MD**
2003 – 2008	**Windsor Interfaces, Inc.** President and CEO of start-up company to commercialize some HCIL projects	**Chevy Chase, MD**
2005	**ScholarOne, Inc.** Consultant to help them with visualization in their scholarly publication and conference management software	**Charlottsville, VA**
2004 – 2005	**ATTAP, Inc.** Consultant to help this start-up develop novel mobile device interfaces for personal information management	**New York, NY**
2003	**Microsoft Research Corp** On University Relations Faculty Advisory Board	**Redmond, WA**
2001 – 2003	**PARC** Advised on project to support brainstorming	**Palo Alto, CA**
2000	**NASA Goddard Space Flight Center** Designed prototype visualizations for satellite constellation control	**Greenbelt, MD**
1999 – 2001	**Swedish Institute of Computer Science (SICS)** Worked on European Union KidStory project	**Stockholm, Sweden**
1998 – 1999	**Lockheed Martin Astronautics** Advised on use of Pad++ for image analyst application	**Denver, CO**
1996 – 1997	**Sony Research Corporation** Advised on use of Pad++ for product development	**New York, NY**

B. UNIVERSITY
i. Departmental

2013 – 2014	CS Educational Transformation Committee co-chair
2008 – 2012	CS Teaching Evaluation Committee
2008 – 2011	CS Department Council
2007 – 2010	Software Engineering Field Committee chair
2010	UMIACS APT Committee
2009	CS Faculty Search Committee
2007	Chair of APT committee for Evan Golub's promotion to Senior Lecturer
2006	Undergraduate curriculum committee
2006	CS Distinguished Lecturer committee
2004	UMIACS steering committee
2004	High school programming contest
2004	Undergraduate curriculum
2003 – 2005	CS Department Council
2002	CFAR faculty recruiting committee
2001 – 2002	Lab committee
2001 – 2002	On department faculty recruiting committee
2001	Taught 1.5 hour course for high school students in Governor's program.
2000	Represented the computer science department on Capitol Hill for an exhibition to encourage Congressional appropriations for NSF.
2000	Helped with Computer Science Dept. research review day – made departmental demo.
1999 – 2000	Technical staff liaison – to help CS admin and technical staff.
1999	Helped with Computer Science Programming Contest
1996 – 1997	Graduate Admissions coordinator for the UNM Computer Science Department.

iii. University

2016 – 2018	USM Faculty Workload Workgroup
2015 – 2018	DIT Learning Technology Working Group
2015 – 2017	Senate Library Council Committee
2015 – 2018	Senate Educational Affairs Committee
2014 – 2018	Provost's Data Policy Advisory Committee
2013 – 2018	USM Academic Transformation Advisory Committee
2013 – 2018	Future of Information Alliance brainstorming board
2013 – 2018	DIT Technology Accessibility Committee
2013 – 2014	Journalism Faculty Search Committee
2013 – 2014	Learning @ Technology Working Group for DIT
2012 – 2013	Provost's Commission on Blended and Online Education

2012 – 2013	VP IT/CIO – IT Council
2012	CMNS Distinguished Research Scientist Prize comittee
2011	VP / CIO Search Committee
2010	UMD Campus-Wide Mobile App Programming Contest Chair
2002 – 2005	Advisory board member for MITH (Maryland Institute for Technology and the Humanities)
2000	Served on search committee for new intellectual property manager for Office of Technology Commercialization.
2000	Ran event for Maryland Day – opened lab to children to use KidPad to tell collaborative stories