US008667091B2

(12) **United States Patent**
Almadi et al.

(10) **Patent No.: US 8,667,091 B2**
(45) **Date of Patent: Mar. 4, 2014**

(54) **MACHINES, COMPUTER PROGRAM PRODUCTS, AND COMPUTER-IMPLEMENTED METHODS PROVIDING AN INTEGRATED NODE FOR DATA ACQUISITION AND CONTROL**

(75) Inventors: **Soloman M Almadi**, Dhahran (SA); **Soliman A. Al-Walaie**, Dammam (SA); **Tofig A. Al-Dhubaib**, Khobar (SA)

(73) Assignee: **Saudi Arabian Oil Company**, Dhahran (SA)

(*) Notice: Subject to any disclaimer, the term of this patent is extended or adjusted under 35 U.S.C. 154(b) by 107 days.

(21) Appl. No.: **13/188,899**

(22) Filed: **Jul. 22, 2011**

(65) **Prior Publication Data**

US 2012/0084400 A1 Apr. 5, 2012

Related U.S. Application Data

(60) Provisional application No. 61/367,207, filed on Jul. 23, 2010.

(51) **Int. Cl.**
G06F 15/16 (2006.01)

(52) **U.S. Cl.**
USPC **709/219**

(58) **Field of Classification Search**
None
See application file for complete search history.

(56) **References Cited**

U.S. PATENT DOCUMENTS

6,021,356	A	2/2000	Chang	
6,721,607	B2	4/2004	Brault	
6,819,960	B1	11/2004	McKelvey et al.	
6,950,851	B2	9/2005	Osburn, III	
7,120,558	B2	10/2006	McIntyre et al.	
7,558,703	B2	7/2009	Stoupis et al.	
7,565,351	B1	7/2009	Callaghan	
7,672,268	B2 *	3/2010	Stanwood et al.	370/328
7,953,092	B2 *	5/2011	Pepper et al.	370/392
7,979,221	B2 *	7/2011	Gilbert et al.	702/61
8,286,207	B1 *	10/2012	Schneidewend et al.	725/58
2003/0174070	A1 *	9/2003	Garrod et al.	340/870.07
2005/0255828	A1	11/2005	Fisher	
2006/0069689	A1 *	3/2006	Karklins et al.	707/100
2006/0240818	A1	10/2006	McCoy et al.	
2007/0101178	A1	5/2007	Jammu et al.	
2007/0206644	A1	9/2007	Bertsch et al.	

(Continued)

OTHER PUBLICATIONS

Abdullah Alkhalifah "A cost Effective Means to Transmit Real Time and Archived Well Data".*

(Continued)

Primary Examiner — Oscar Louie
Assistant Examiner — Younes Naji
(74) *Attorney, Agent, or Firm* — Bracewell & Giuliani LLP

(57) **ABSTRACT**

Embodiments of an integrated node, such as a programmable logic controller, are provided for process automation and seamless, flexible subsystem communications, allowing a remote host to interface with a plurality of remote and in-plant subsystems and services using a wired or wireless network interface and having a database server and a protocol translator or translation server to convert and manipulate various industrial interfaces and protocols. Embodiments of the integrated node time-synchronize the plurality of remote subsystems, acquire and archive time-stamped process data, report exceptions therein to the remote host, and extract and transmit time-stamped process data to the remote host. Embodiments of computer program products and computer implemented methods also are provided to detect a time of communication failure and a time of a corresponding recovery between a node and either a remote subsystem or a remote host.

20 Claims, 18 Drawing Sheets

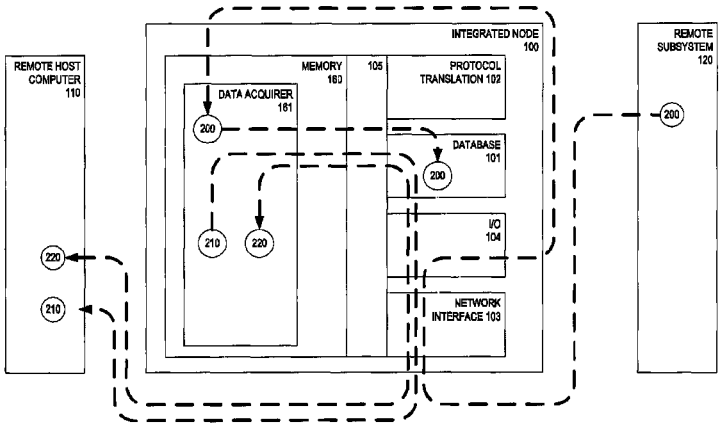

(56) **References Cited**

U.S. PATENT DOCUMENTS

2008/0071899	A1*	3/2008	Odaka et al.	709/223
2008/0154393	A1	6/2008	Reshef	
2009/0073985	A1*	3/2009	Rogers	370/395.4
2009/0182846	A1*	7/2009	Bowler	709/219
2009/0216573	A1*	8/2009	Heiberg-Andersen et al.	705/7
2010/0058052	A1*	3/2010	Bartels et al.	713/153

OTHER PUBLICATIONS

PCT Partial International Search Report for co-pending application No. PCT/US2011/045016, dated Dec. 14, 2011.

* cited by examiner

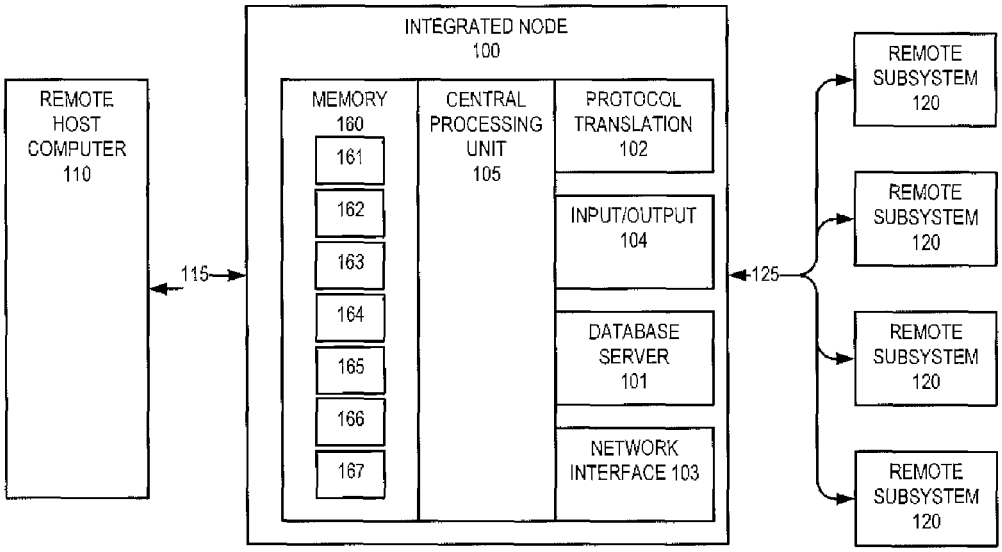
INTEGRATED NODE
100
REMOTE
HOST
COMPUTER
110
MEMORY
160
161
162
163
164
165
166
167
CENTRAL
PROCESSING
UNIT
105
PROTOCOL
TRANSLATION
102
INPUT/OUTPUT
104
DATABASE
SERVER
101
NETWORK
INTERFACE 103
115
125
REMOTE
SUBSYSTEM
120
REMOTE
SUBSYSTEM
120
REMOTE
SUBSYSTEM
120
REMOTE
SUBSYSTEM
120

FIG. 1A

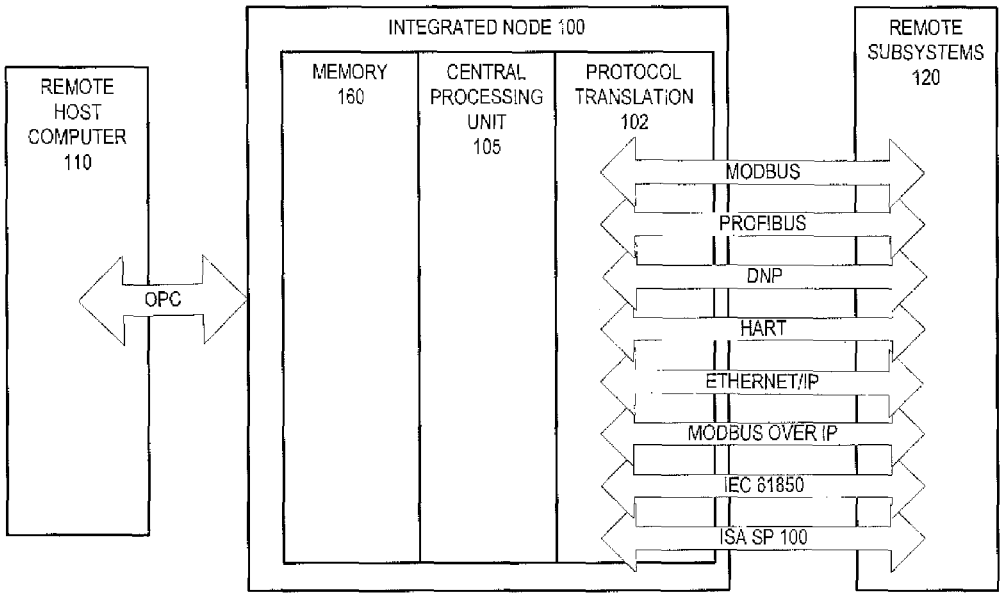
INTEGRATED NODE 100
REMOTE
HOST
COMPUTER
110
OPC
MEMORY
160
CENTRAL
PROCESSING
UNIT
105
PROTOCOL
TRANSLATION
102
REMOTE
SUBSYSTEMS
120
MODBUS
PROFIBUS
DNP
HART
ETHERNET/IP
MODBUS OVER IP
IEC 61850
ISA SP 100

FIG. 1B

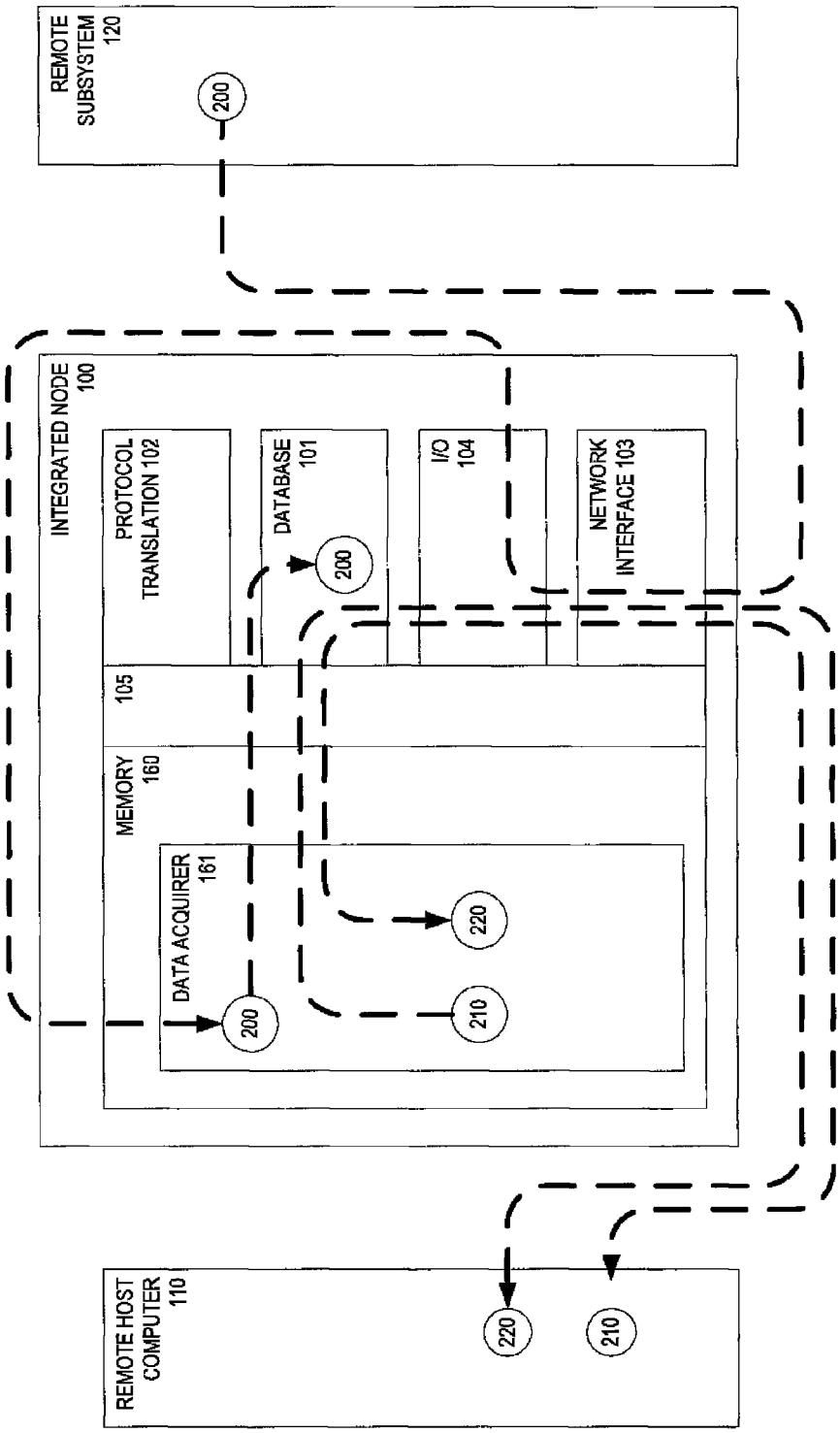
REMOTE SUBSYSTEM 120
200
INTEGRATED NODE 100
PROTOCOL TRANSLATION 102
DATABASE 101
200
I/O 104
NETWORK INTERFACE 103
105
MEMORY 160
DATA ACQUIRER 161
200
220
210
REMOTE HOST COMPUTER 110
220
210

FIG. 2A

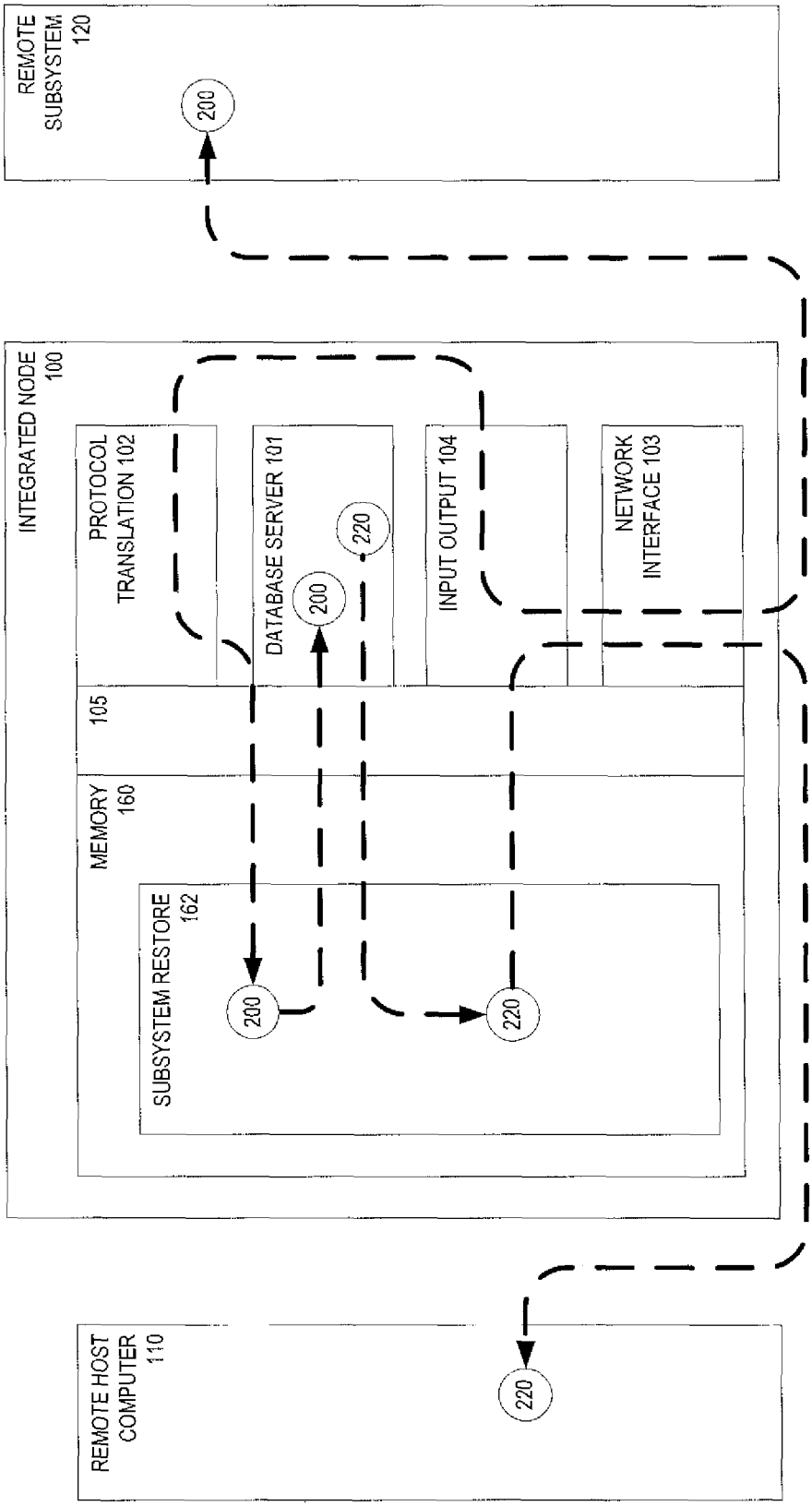
REMOTE SUBSYSTEM 120
200
INTEGRATED NODE 100
PROTOCOL TRANSLATION 102
DATABASE SERVER 101
220
200
INPUT OUTPUT 104
NETWORK INTERFACE 103
105
MEMORY 160
SUBSYSTEM RESTORE 162
200
220
REMOTE HOST COMPUTER 110
220

FIG. 2B

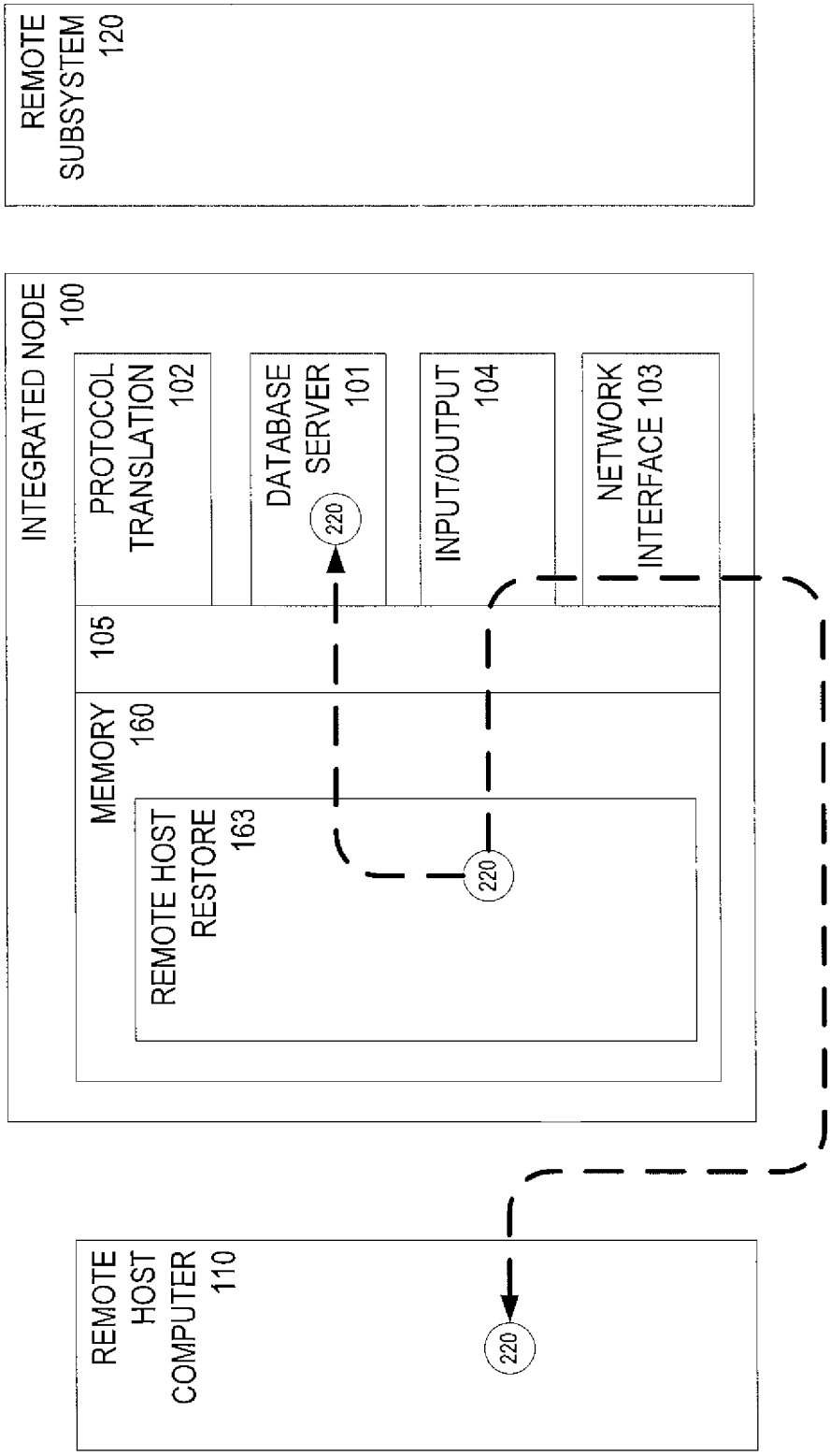
REMOTE SUBSYSTEM 120
INTEGRATED NODE 100
PROTOCOL TRANSLATION 102
DATABASE SERVER 101
INPUT/OUTPUT 104
NETWORK INTERFACE 103
105
MEMORY 160
REMOTE HOST RESTORE 163
220
220
REMOTE HOST COMPUTER 110
220

FIG. 2C

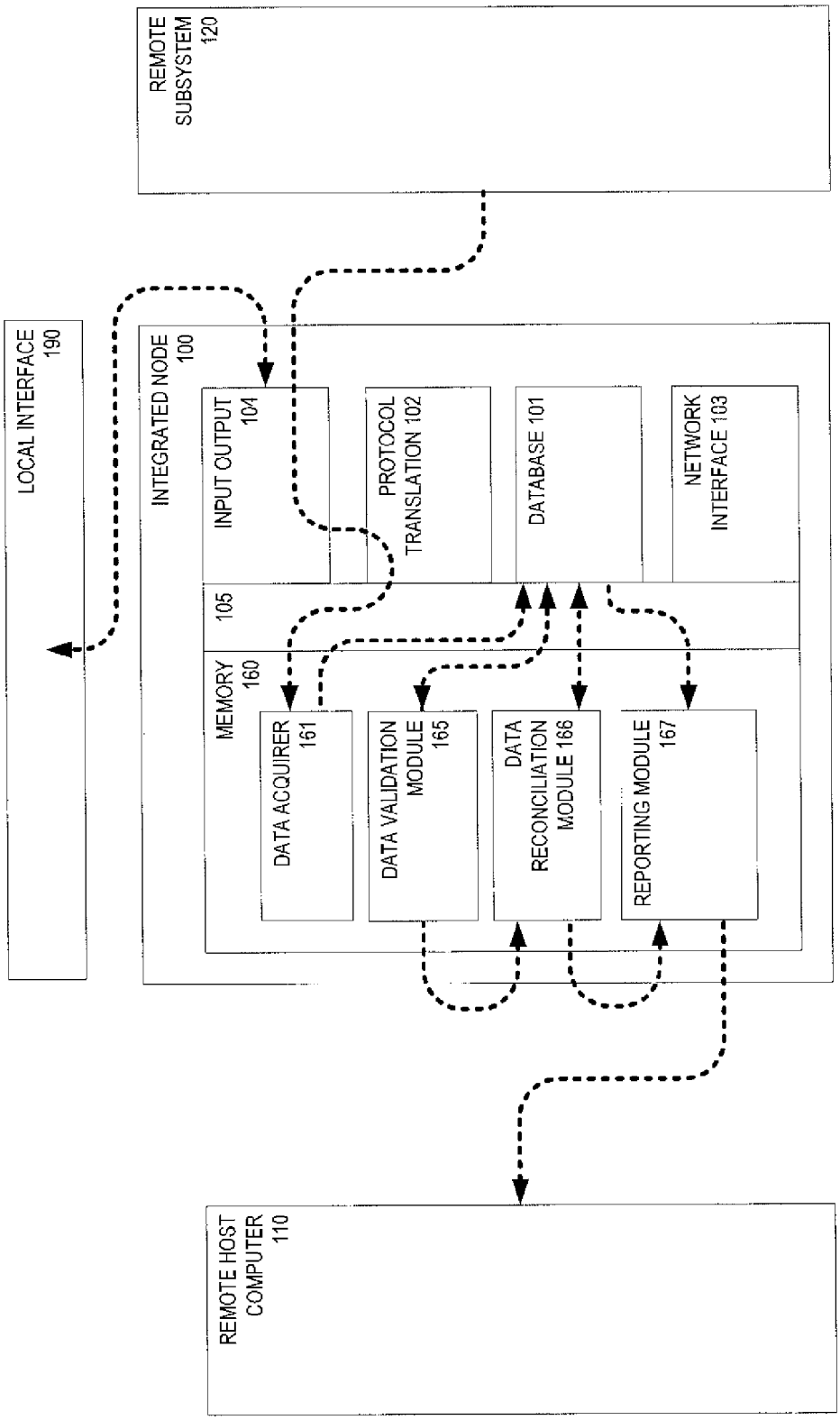
REMOTE SUBSYSTEM 120
LOCAL INTERFACE 190
INTEGRATED NODE 100
INPUT OUTPUT 104
PROTOCOL TRANSLATION 102
DATABASE 101
NETWORK INTERFACE 103
105
MEMORY 160
DATA ACQUIRER 161
DATA VALIDATION MODULE 165
DATA RECONCILIATION MODULE 166
REPORTING MODULE 167
REMOTE HOST COMPUTER 110

FIG. 2D

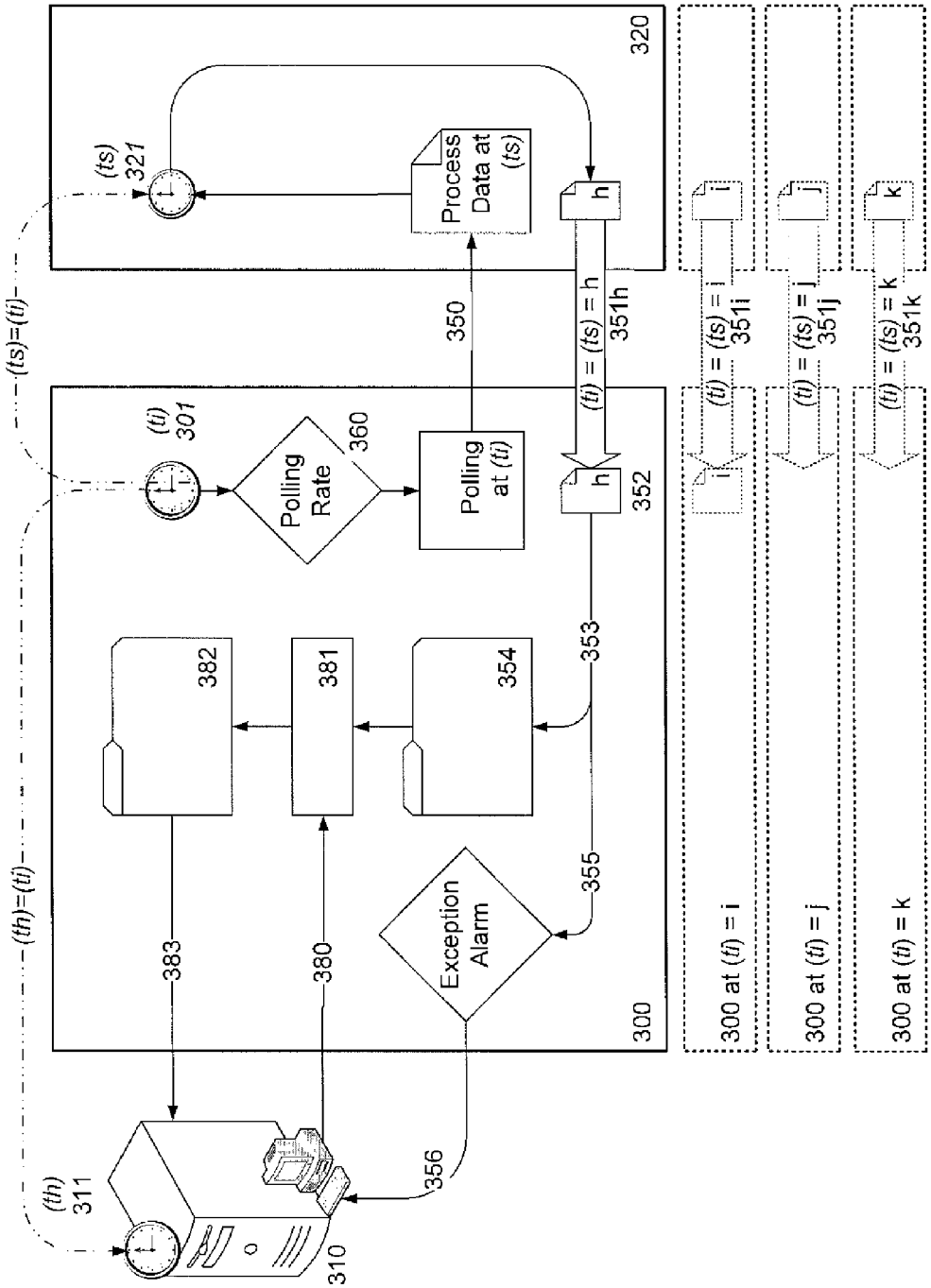
(th)
311
310
356
383
380
Exception Alarm
355
382
381
354
353
300
(th)=(ti)
(ti)
301
Polling Rate
360
Polling at (ti)
352
h
350
(ti) = (ts) = h
351h
(ts)=(ti)
(ts)
321
Process Data at (ts)
h
320
300 at (ti) = i
300 at (ti) = j
300 at (ti) = k
(ti) = (ts) = i
351i
(ti) = (ts) = j
351j
(ti) = (ts) = k
351k
i
j
k

FIG. 3

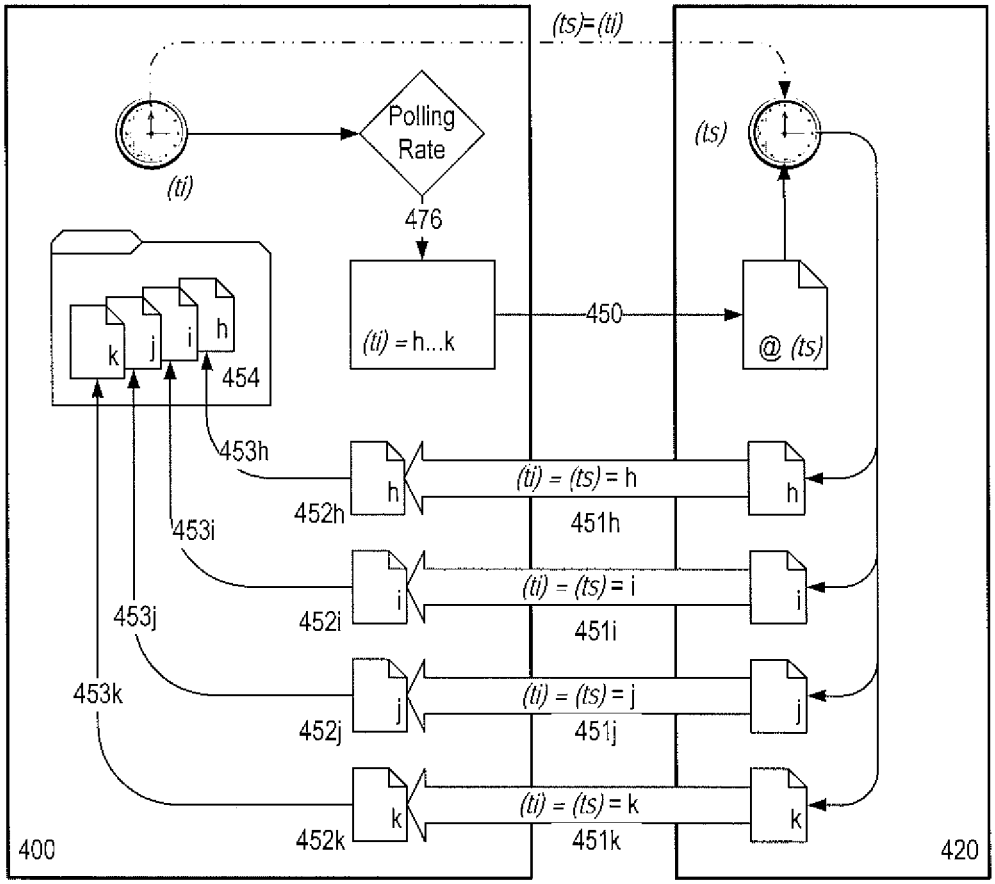
(ts)=(ti)
Polling Rate
(ti)
476
(ts)
(ti) = h...k
450
@ (ts)
k
j
i
h
454
453h
453i
453j
453k
452h
452i
452j
452k
(ti) = (ts) = h
451h
(ti) = (ts) = i
451i
(ti) = (ts) = j
451j
(ti) = (ts) = k
451k
400
420

FIG. 4A

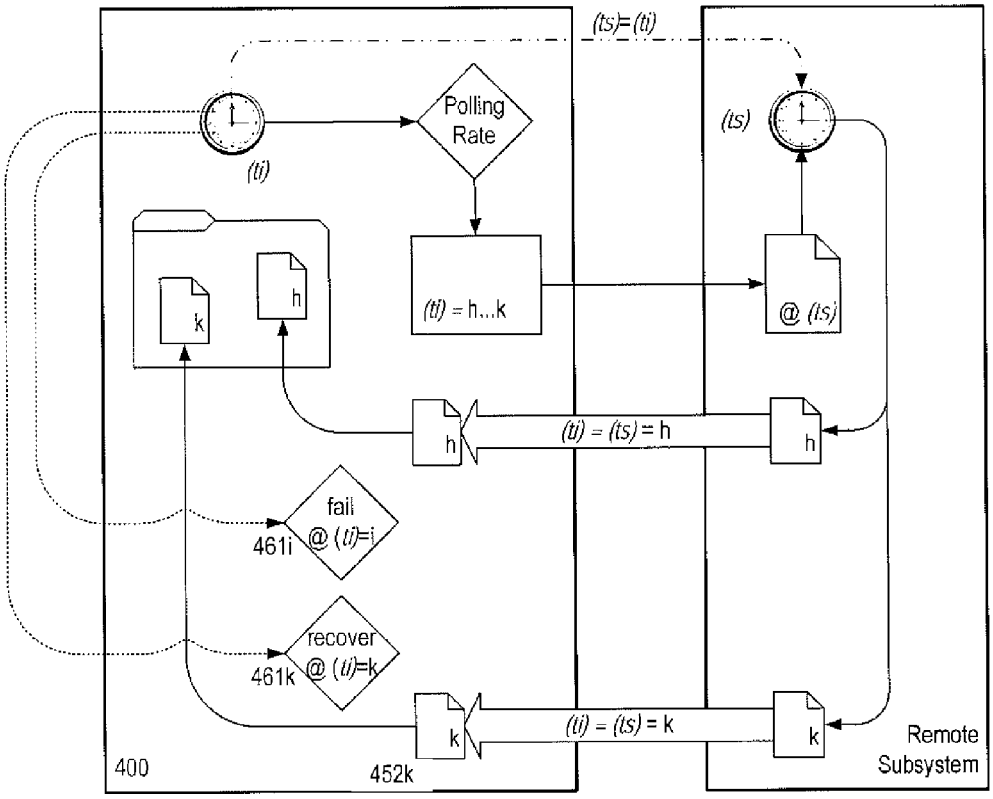
(ts)=(ti)
Polling Rate
(ti)
(ts)
k
h
(ti) = h...k
@ (ts)
h
(ti) = (ts) = h
h
fail @ (ti)=i
461i
recover @ (ti)=k
461k
k
(ti) = (ts) = k
k
400
452k
Remote Subsystem

FIG. 4B

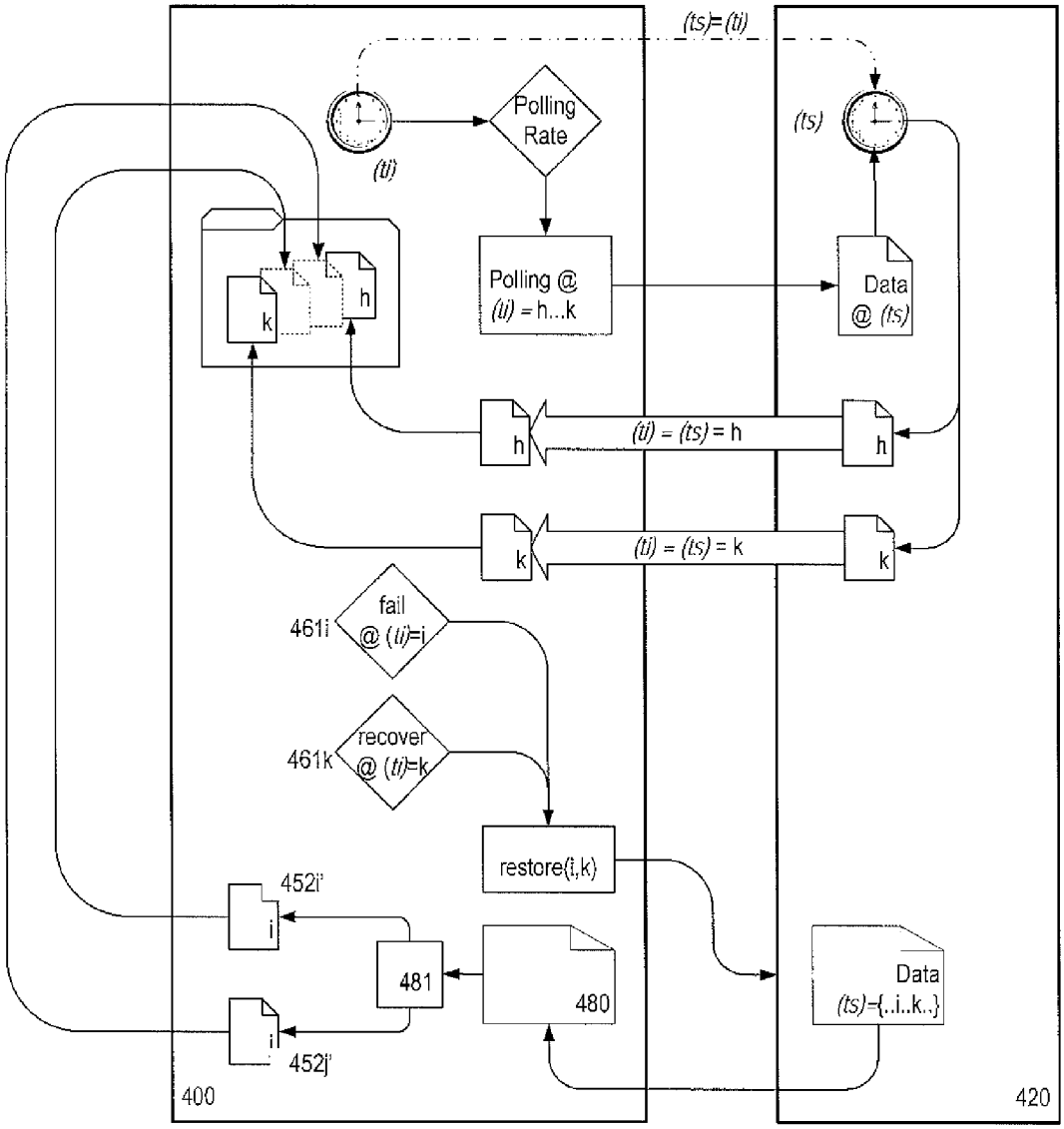
(ts)=(ti)
Polling Rate
(ti)
(ts)
Polling @ (ti) = h...k
Data @ (ts)
k
h
(ti) = (ts) = h
h
h
(ti) = (ts) = k
k
k
fail @ (ti)=i
461i
recover @ (ti)=k
461k
restore{i,k}
452i'
i
481
480
Data (ts)={..i..k..}
i
452j'
400
420

FIG. 4C

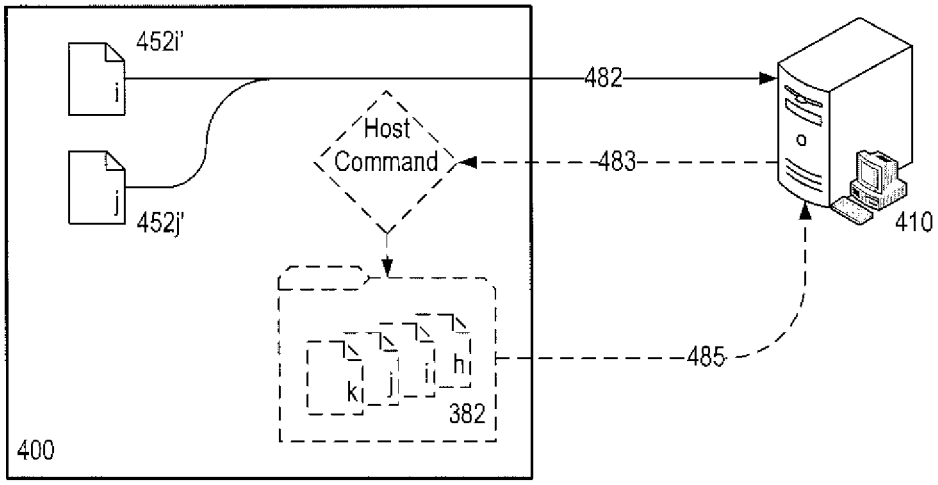

FIG. 4D

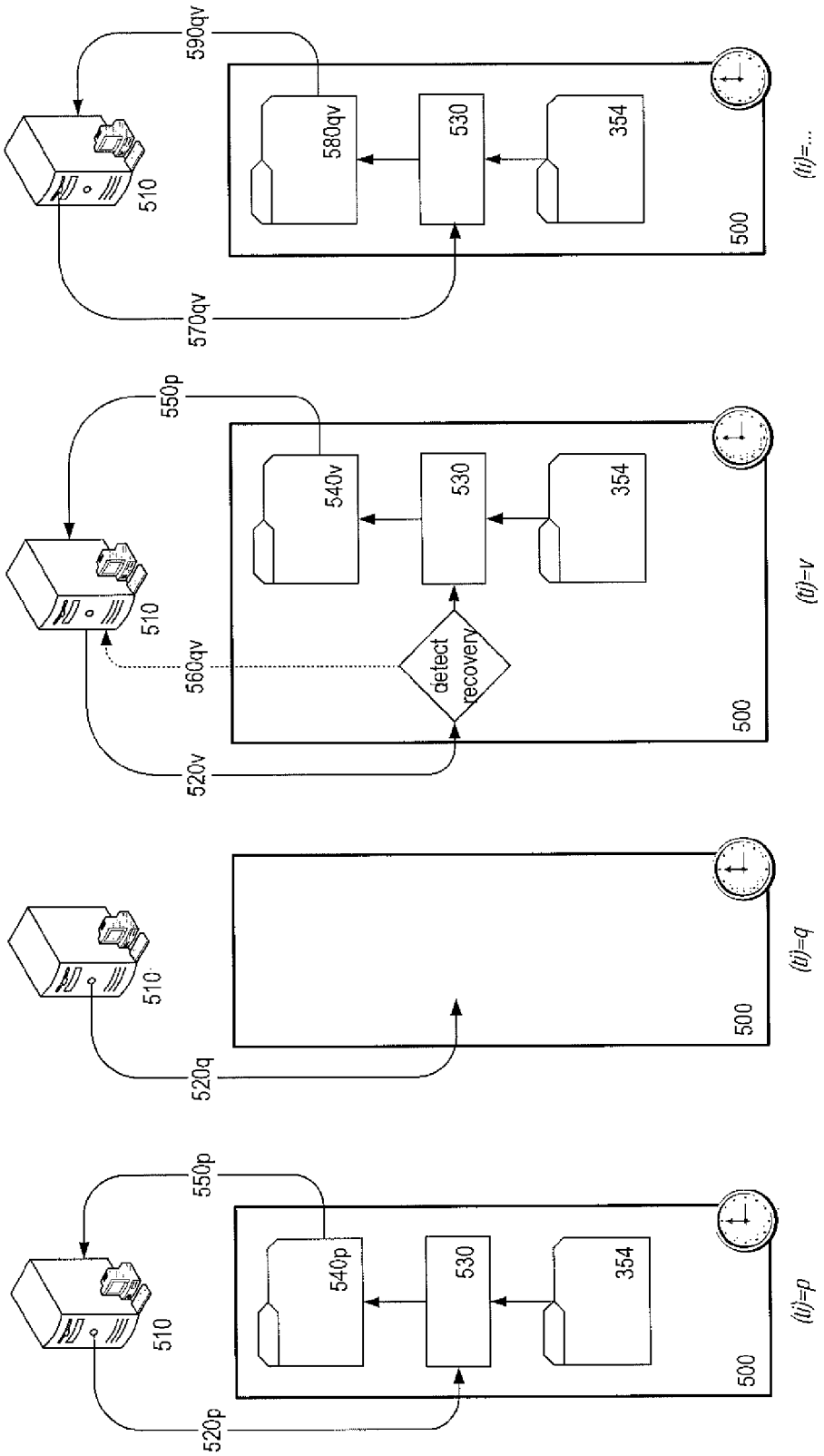
510
520p
550p
540p
530
354
500
(ti)=p
510
520q
500
(ti)=q
510
520v
560qv
550p
540v
530
354
detect recovery
500
(ti)=v
510
570qv
590qv
580qv
530
354
500
(ti)=...

FIG. 5

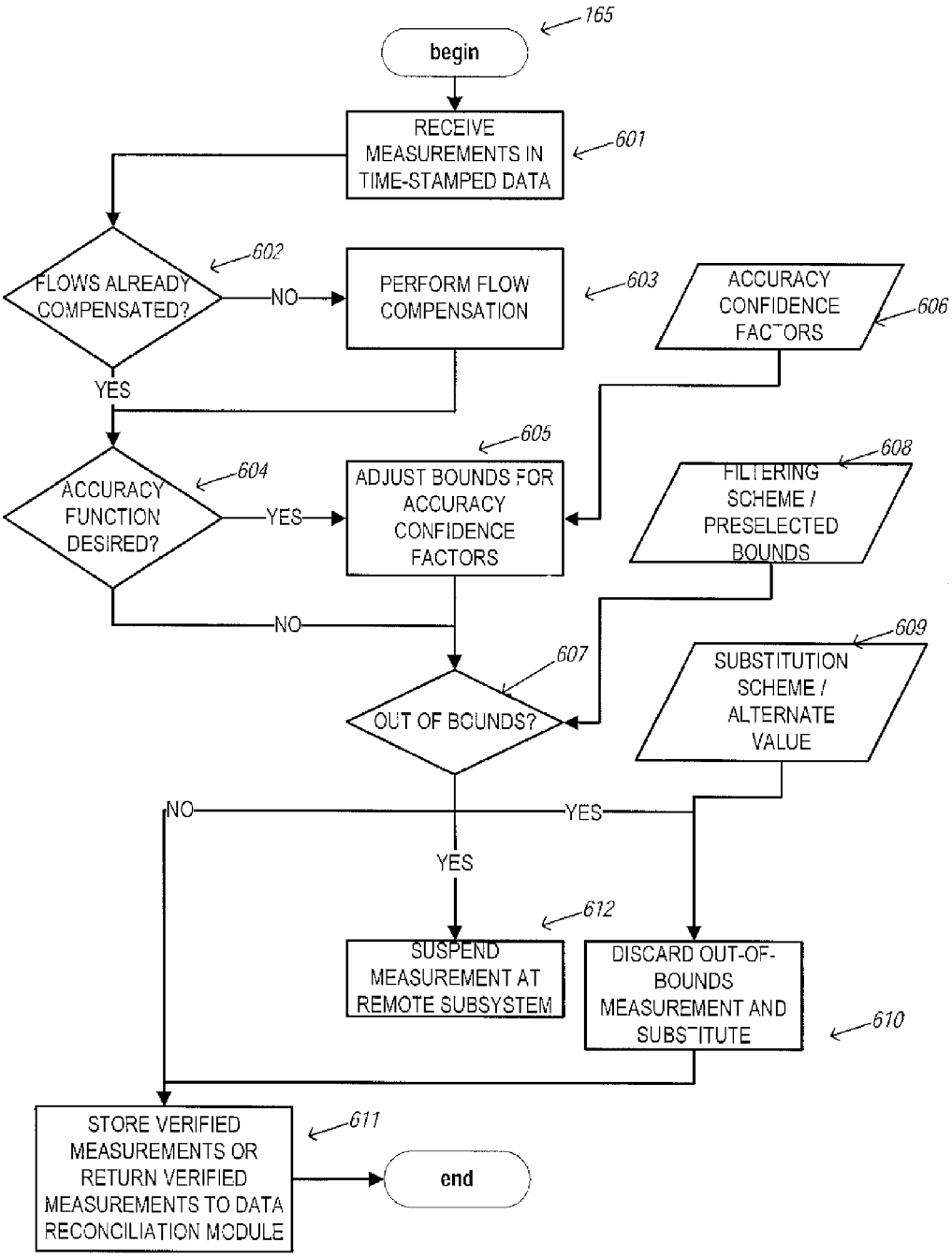
165
begin
RECEIVE MEASUREMENTS IN TIME-STAMPED DATA
601
FLOWS ALREADY COMPENSATED?
602
NO
PERFORM FLOW COMPENSATION
603
ACCURACY CONFIDENCE FACTORS
606
YES
ACCURACY FUNCTION DESIRED?
604
YES
ADJUST BOUNDS FOR ACCURACY CONFIDENCE FACTORS
605
FILTERING SCHEME / PRESELECTED BOUNDS
608
NO
OUT OF BOUNDS?
607
SUBSTITUTION SCHEME / ALTERNATE VALUE
609
NO
YES
YES
SUSPEND MEASUREMENT AT REMOTE SUBSYSTEM
612
DISCARD OUT-OF-BOUNDS MEASUREMENT AND SUBSTITUTE
610
STORE VERIFIED MEASUREMENTS OR RETURN VERIFIED MEASUREMENTS TO DATA RECONCILIATION MODULE
611
end

FIG. 6

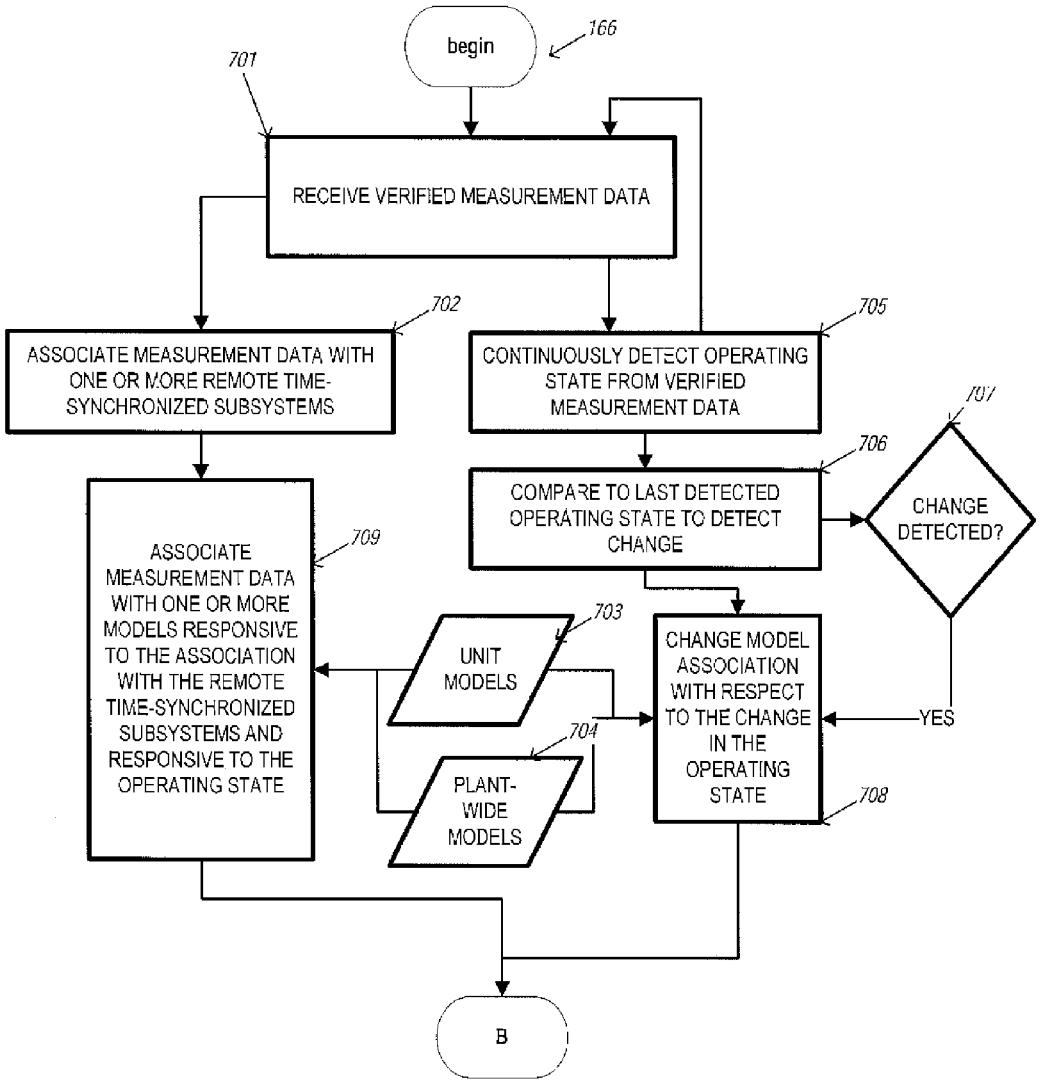
begin
166
701
RECEIVE VERIFIED MEASUREMENT DATA
702
ASSOCIATE MEASUREMENT DATA WITH ONE OR MORE REMOTE TIME-SYNCHRONIZED SUBSYSTEMS
705
CONTINUOUSLY DETECT OPERATING STATE FROM VERIFIED MEASUREMENT DATA
707
706
COMPARE TO LAST DETECTED OPERATING STATE TO DETECT CHANGE
CHANGE DETECTED?
709
ASSOCIATE MEASUREMENT DATA WITH ONE OR MORE MODELS RESPONSIVE TO THE ASSOCIATION WITH THE REMOTE TIME-SYNCHRONIZED SUBSYSTEMS AND RESPONSIVE TO THE OPERATING STATE
703
UNIT MODELS
704
PLANT-WIDE MODELS
CHANGE MODEL ASSOCIATION WITH RESPECT TO THE CHANGE IN THE OPERATING STATE
YES
708
B

FIG. 7A

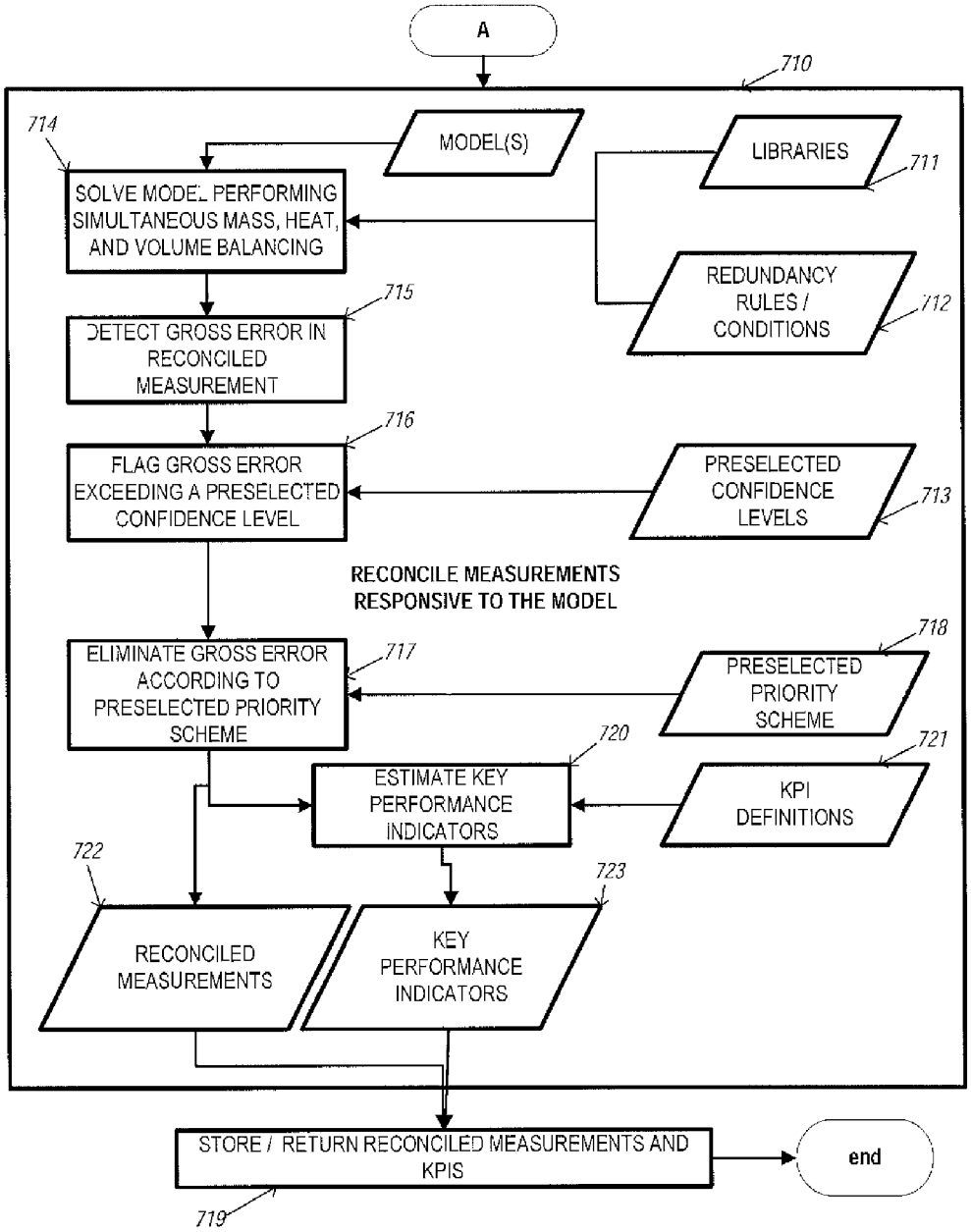
A
710
714
MODEL(S)
LIBRARIES
711
SOLVE MODEL PERFORMING SIMULTANEOUS MASS, HEAT, AND VOLUME BALANCING
REDUNDANCY RULES / CONDITIONS
712
715
DETECT GROSS ERROR IN RECONCILED MEASUREMENT
716
FLAG GROSS ERROR EXCEEDING A PRESELECTED CONFIDENCE LEVEL
PRESELECTED CONFIDENCE LEVELS
713
RECONCILE MEASUREMENTS RESPONSIVE TO THE MODEL
718
ELIMINATE GROSS ERROR ACCORDING TO PRESELECTED PRIORITY SCHEME
717
PRESELECTED PRIORITY SCHEME
720
721
ESTIMATE KEY PERFORMANCE INDICATORS
KPI DEFINITIONS
722
723
RECONCILED MEASUREMENTS
KEY PERFORMANCE INDICATORS
STORE / RETURN RECONCILED MEASUREMENTS AND KPIS
end
719

FIG. 7B

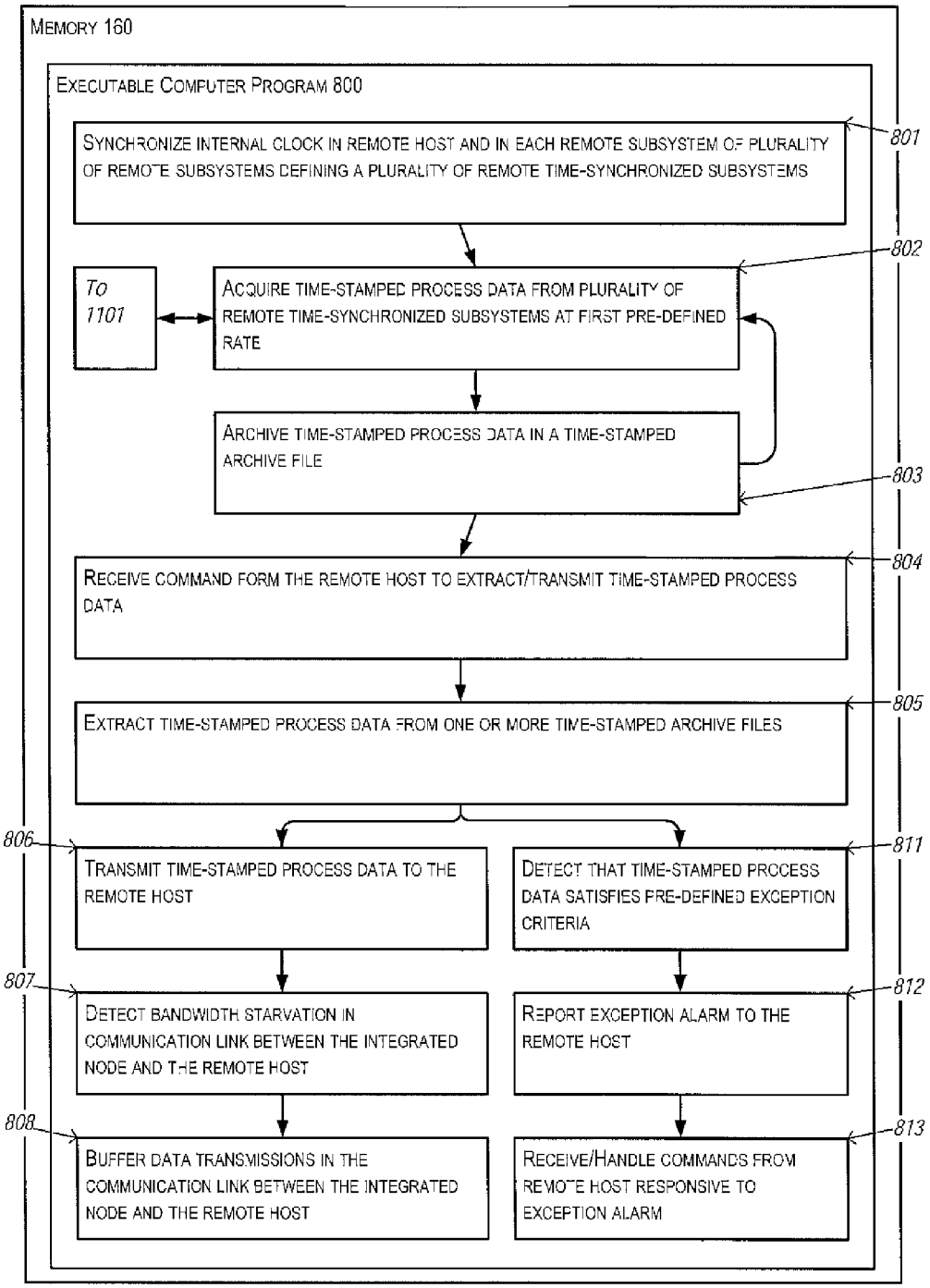
MEMORY 160
EXECUTABLE COMPUTER PROGRAM 800
SYNCHRONIZE INTERNAL CLOCK IN REMOTE HOST AND IN EACH REMOTE SUBSYSTEM OF PLURALITY OF REMOTE SUBSYSTEMS DEFINING A PLURALITY OF REMOTE TIME-SYNCHRONIZED SUBSYSTEMS
801
To 1101
ACQUIRE TIME-STAMPED PROCESS DATA FROM PLURALITY OF REMOTE TIME-SYNCHRONIZED SUBSYSTEMS AT FIRST PRE-DEFINED RATE
802
ARCHIVE TIME-STAMPED PROCESS DATA IN A TIME-STAMPED ARCHIVE FILE
803
RECEIVE COMMAND FORM THE REMOTE HOST TO EXTRACT/TRANSMIT TIME-STAMPED PROCESS DATA
804
EXTRACT TIME-STAMPED PROCESS DATA FROM ONE OR MORE TIME-STAMPED ARCHIVE FILES
805
806
TRANSMIT TIME-STAMPED PROCESS DATA TO THE REMOTE HOST
DETECT THAT TIME-STAMPED PROCESS DATA SATISFIES PRE-DEFINED EXCEPTION CRITERIA
811
807
DETECT BANDWIDTH STARVATION IN COMMUNICATION LINK BETWEEN THE INTEGRATED NODE AND THE REMOTE HOST
REPORT EXCEPTION ALARM TO THE REMOTE HOST
812
808
BUFFER DATA TRANSMISSIONS IN THE COMMUNICATION LINK BETWEEN THE INTEGRATED NODE AND THE REMOTE HOST
RECEIVE/HANDLE COMMANDS FROM REMOTE HOST RESPONSIVE TO EXCEPTION ALARM
813

FIG. 8

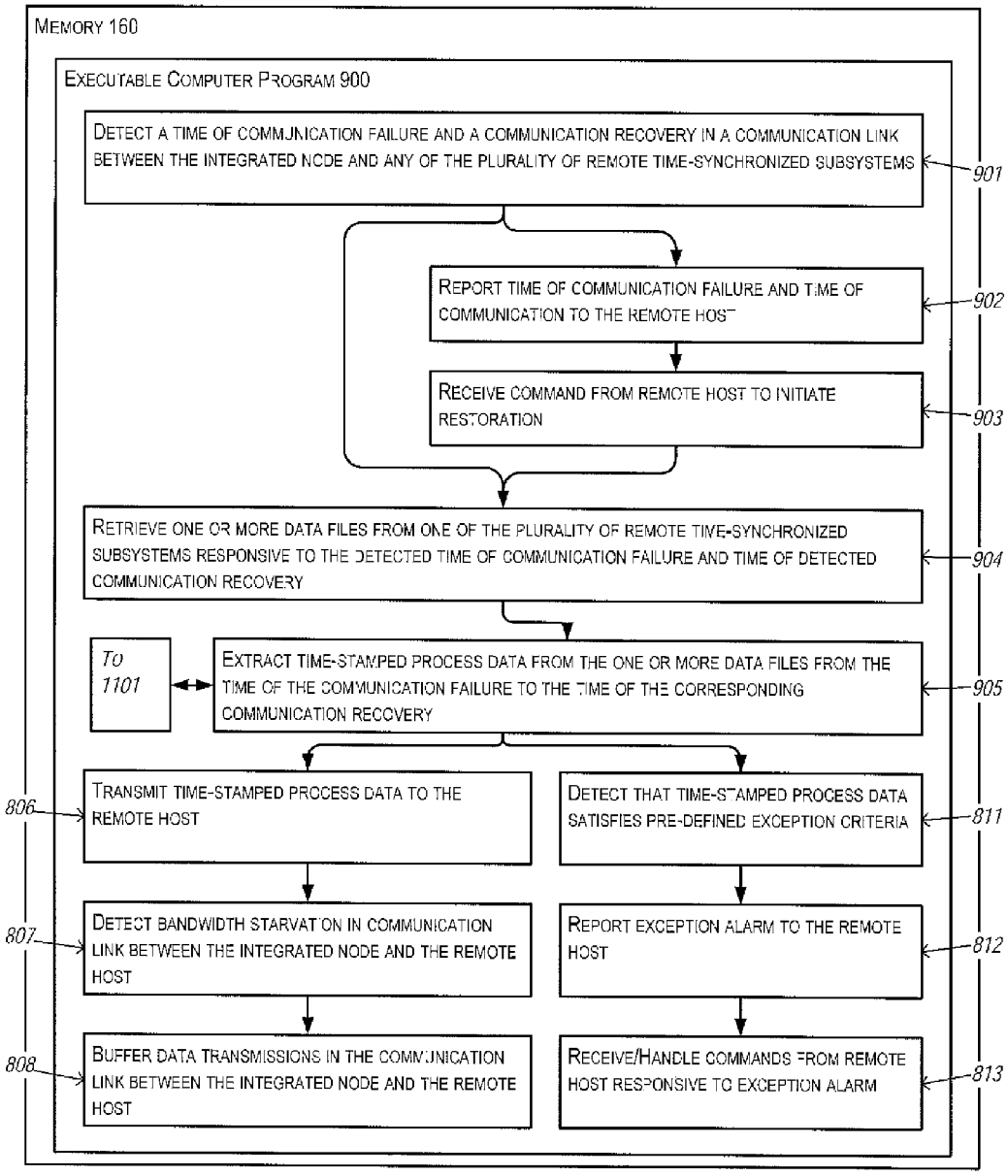
MEMORY 160
EXECUTABLE COMPUTER PROGRAM 900
DETECT A TIME OF COMMUNICATION FAILURE AND A COMMUNICATION RECOVERY IN A COMMUNICATION LINK BETWEEN THE INTEGRATED NODE AND ANY OF THE PLURALITY OF REMOTE TIME-SYNCHRONIZED SUBSYSTEMS
901
REPORT TIME OF COMMUNICATION FAILURE AND TIME OF COMMUNICATION TO THE REMOTE HOST
902
RECEIVE COMMAND FROM REMOTE HOST TO INITIATE RESTORATION
903
RETRIEVE ONE OR MORE DATA FILES FROM ONE OF THE PLURALITY OF REMOTE TIME-SYNCHRONIZED SUBSYSTEMS RESPONSIVE TO THE DETECTED TIME OF COMMUNICATION FAILURE AND TIME OF DETECTED COMMUNICATION RECOVERY
904
TO 1101
EXTRACT TIME-STAMPED PROCESS DATA FROM THE ONE OR MORE DATA FILES FROM THE TIME OF THE COMMUNICATION FAILURE TO THE TIME OF THE CORRESPONDING COMMUNICATION RECOVERY
905
806
TRANSMIT TIME-STAMPED PROCESS DATA TO THE REMOTE HOST
DETECT THAT TIME-STAMPED PROCESS DATA SATISFIES PRE-DEFINED EXCEPTION CRITERIA
811
807
DETECT BANDWIDTH STARVATION IN COMMUNICATION LINK BETWEEN THE INTEGRATED NODE AND THE REMOTE HOST
REPORT EXCEPTION ALARM TO THE REMOTE HOST
812
808
BUFFER DATA TRANSMISSIONS IN THE COMMUNICATION LINK BETWEEN THE INTEGRATED NODE AND THE REMOTE HOST
RECEIVE/HANDLE COMMANDS FROM REMOTE HOST RESPONSIVE TO EXCEPTION ALARM
813

FIG. 9

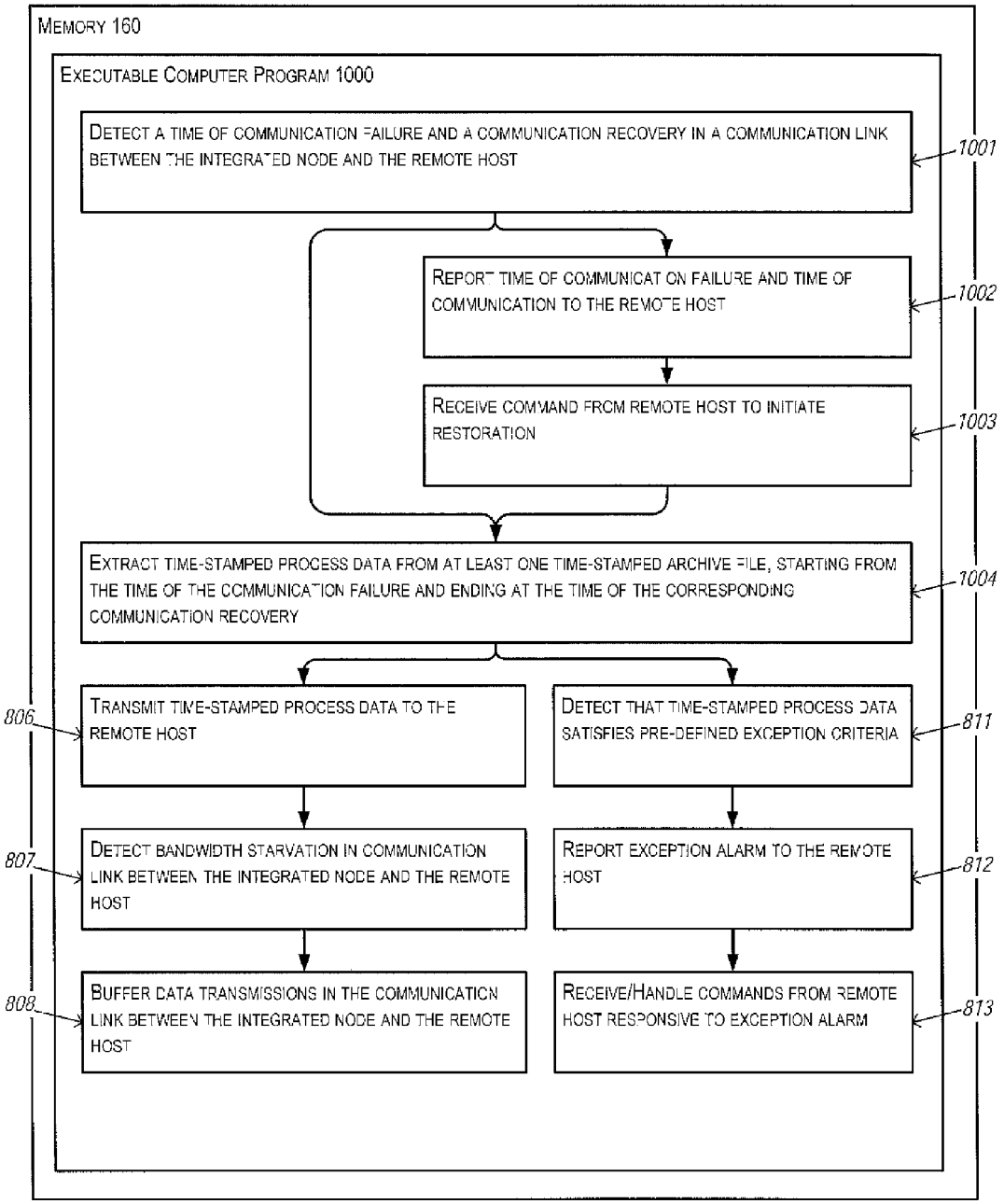
MEMORY 160
EXECUTABLE COMPUTER PROGRAM 1000
DETECT A TIME OF COMMUNICATION FAILURE AND A COMMUNICATION RECOVERY IN A COMMUNICATION LINK BETWEEN THE INTEGRATED NODE AND THE REMOTE HOST
1001
REPORT TIME OF COMMUNICATION FAILURE AND TIME OF COMMUNICATION TO THE REMOTE HOST
1002
RECEIVE COMMAND FROM REMOTE HOST TO INITIATE RESTORATION
1003
EXTRACT TIME-STAMPED PROCESS DATA FROM AT LEAST ONE TIME-STAMPED ARCHIVE FILE, STARTING FROM THE TIME OF THE COMMUNICATION FAILURE AND ENDING AT THE TIME OF THE CORRESPONDING COMMUNICATION RECOVERY
1004
806
TRANSMIT TIME-STAMPED PROCESS DATA TO THE REMOTE HOST
DETECT THAT TIME-STAMPED PROCESS DATA SATISFIES PRE-DEFINED EXCEPTION CRITERIA
811
807
DETECT BANDWIDTH STARVATION IN COMMUNICATION LINK BETWEEN THE INTEGRATED NODE AND THE REMOTE HOST
REPORT EXCEPTION ALARM TO THE REMOTE HOST
812
808
BUFFER DATA TRANSMISSIONS IN THE COMMUNICATION LINK BETWEEN THE INTEGRATED NODE AND THE REMOTE HOST
RECEIVE/HANDLE COMMANDS FROM REMOTE HOST RESPONSIVE TO EXCEPTION ALARM
813

FIG. 10

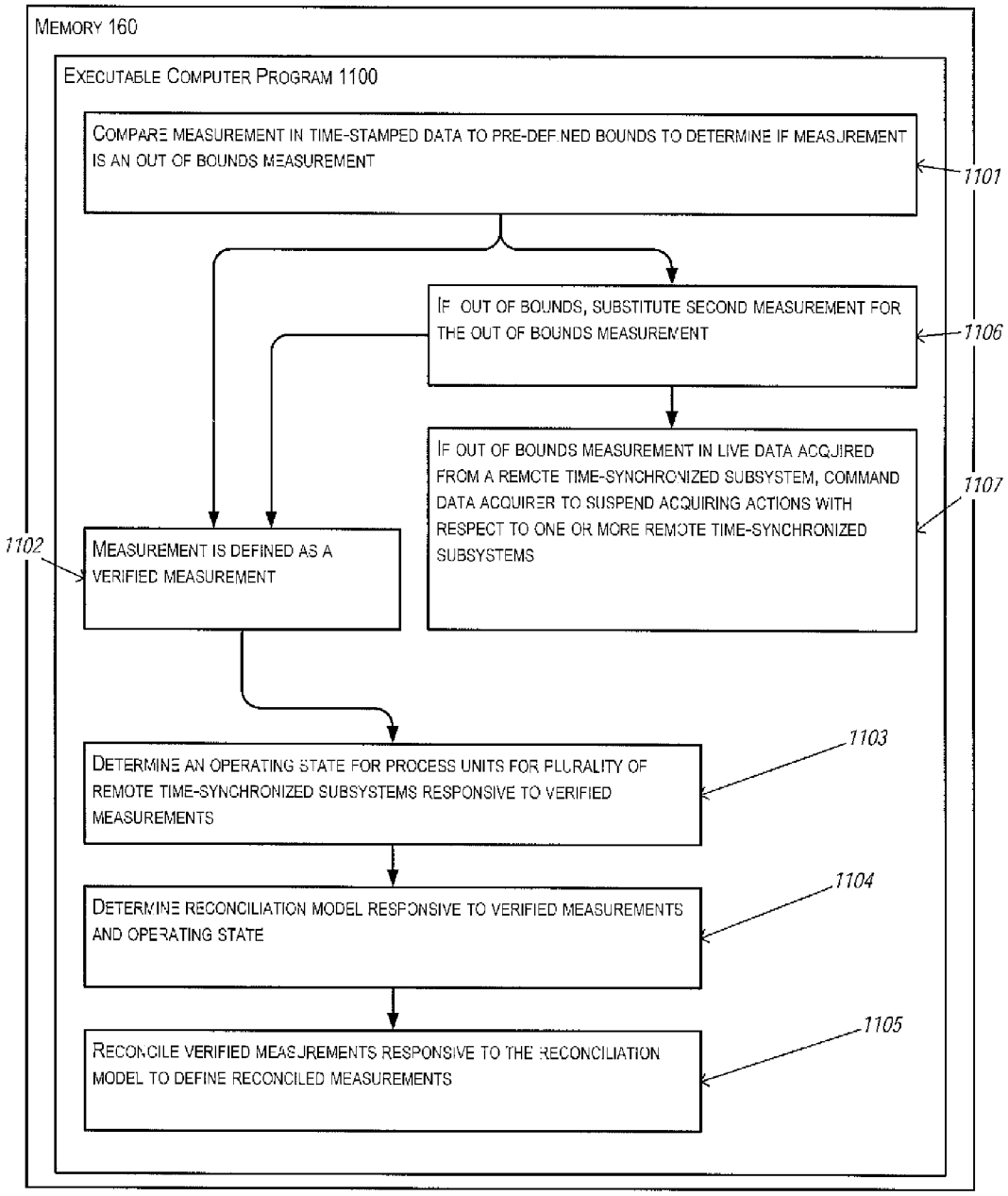
MEMORY 160
EXECUTABLE COMPUTER PROGRAM 1100
COMPARE MEASUREMENT IN TIME-STAMPED DATA TO PRE-DEFINED BOUNDS TO DETERMINE IF MEASUREMENT IS AN OUT OF BOUNDS MEASUREMENT
1101
IF OUT OF BOUNDS, SUBSTITUTE SECOND MEASUREMENT FOR THE OUT OF BOUNDS MEASUREMENT
1106
IF OUT OF BOUNDS MEASUREMENT IN LIVE DATA ACQUIRED FROM A REMOTE TIME-SYNCHRONIZED SUBSYSTEM, COMMAND DATA ACQUIRER TO SUSPEND ACQUIRING ACTIONS WITH RESPECT TO ONE OR MORE REMOTE TIME-SYNCHRONIZED SUBSYSTEMS
1107
1102
MEASUREMENT IS DEFINED AS A VERIFIED MEASUREMENT
DETERMINE AN OPERATING STATE FOR PROCESS UNITS FOR PLURALITY OF REMOTE TIME-SYNCHRONIZED SUBSYSTEMS RESPONSIVE TO VERIFIED MEASUREMENTS
1103
DETERMINE RECONCILIATION MODEL RESPONSIVE TO VERIFIED MEASUREMENTS AND OPERATING STATE
1104
RECONCILE VERIFIED MEASUREMENTS RESPONSIVE TO THE RECONCILIATION MODEL TO DEFINE RECONCILED MEASUREMENTS
1105

FIG. 11

MACHINES, COMPUTER PROGRAM PRODUCTS, AND COMPUTER-IMPLEMENTED METHODS PROVIDING AN INTEGRATED NODE FOR DATA ACQUISITION AND CONTROL

RELATED APPLICATIONS

This application claims priority and is related to U.S. Provisional Patent Application No. 61/367,207 filed Jul. 23, 2010 titled "Machine, Computer Program Products, And Computer-Implemented Methods Providing An Integrated Node For Data Acquisition And Control," which is incorporated by reference in its entirety.

FIELD OF THE INVENTION

The present invention relates generally to automated industrial processes. In more particular aspects, the present invention relates to the control of, and acquisition of data from, remote and in-plant subsystems in automated industrial processes.

BACKGROUND

Related Art

The automation architecture of modern industrial operations, such as that found in modern oil and gas field applications, is enabled at the field-level and process-level by various interconnected devices herein referred to as remote subsystems or field devices. These field devices monitor and collect data, such as measurements of fluid pressure, temperature, or flow, reflective of the operations of the automated process. These field devices are connected to machines known as controllers that operate at the system-level to process the data collected and issue commands back to the field devices, or to other field devices, in response to processing the collected data. The repeated process of receiving collected data and issuing commands thereby constitutes control over the operation of the automated process. For example, field devices perform sensor functions to sense operational information and variables such as temperature, pressure, pH, or flow rate and deliver that information to the system-level controller devices. In addition, field devices can perform actuator functions to receive information, such as commands, from the system level to thereby affect or control the operation of an automated process, for example, through motors and pumps. Accordingly, the sensor and actuator functions, at the process level, are supported by a controller or a number of controllers, at the system level, which receive information from the sensors and transmit information to the actuators. Field devices may be termed "intelligent field devices," generally, in the sense that they may also incorporate more robust functionality, such as the ability to process data, self-monitor, self-regulate, self-calibrate, or provide early warning with respect to malfunctions or predictive maintenance.

The deployment of intelligent field devices requires a complex system architecture, for example, including the setup and calibration of multiple hardware components, such as system-level controller devices including one or more programmable logic controllers ("PLC" or "PLCs") and remote terminal units ("RTU" or "RTUs"). The system level devices require other systems for the retention of data received from the field devices, such as a database server. Also, field devices and controller devices are frequently interconnected using network technology, requiring network devices such as an

Ethernet switch, which can also connect the automation network to remote host computers, such as a Supervisory Control and Data Acquisition (SCADA) host.

Applicants recognize numerous problems, as well as the sources of these problems, in conventional automation remote subsystems. For example, setup and calibration of such a system is made increasingly complex as more and more types of field devices are added to the automation environment, some requiring the use and support of different communication protocols among a variety of existing communication protocols currently in use in the industry. Accordingly, the architecture and configuration of conventional automation systems, especially those using intelligent field devices, can present several logistical problems. First, a greater number of hardware components are needed, which places demands on the limited resources, such as electric power and physical floor space, of an enterprise. Moreover, the number of different hardware components that may be necessary tends to increase the complexity of the support model for the system, for example, for deployment, maintenance, and operation of a multi-device and multi-protocol architecture. Therefore, to employ a plurality of remote field systems, one must employ numerous hardware components typically including, for example: (a) a plurality of controller units, such as PLCs and RTUs, to issue commands to, and gather and process data from a plurality of field devices, including remote subsystems and instruments, and according to any one of multiple communication protocols; (b) a database server for the storage of process data retrieved from the remote subsystems and instruments; and (c) a communication infrastructure supporting multiple communication interfaces, including network connectivity and multi-protocol support. As various subsystems implement different communication protocols and interfaces, even more intermediary devices may be required. In addition to the cost and other disadvantages of having to supply the number of hardware components described, the operation of numerous hardware components results in increased power and space requirements and a more complex support model to deploy, maintain, and operate the components.

SUMMARY OF THE INVENTION

Applicants recognize that the operation of numerous hardware components disadvantageously results in multiple points of control, thereby creating an undesirable risk of conflicts in data collection and an undesirably low tolerance for network and host failure. For example, one common disadvantage in employing multiple systems as described above occurs when the data collected and stored is not time-stamped according to a uniform, synchronized time, rendering the data incompatible for purposes of interfacing with time-based functions provided by or for a host computer, which can cause data collection conflicts between captured data and host data, such as in systematic analysis performed at the remote host, for example, for process simulation and optimization, e.g., reservoir modeling and characterization. Furthermore, existing systems employing multiple devices that are not synchronized as to time cannot sufficiently tolerate network and host failure without encountering an undesirable loss of the collected data during the outage period, which cannot be regenerated during the outage, for example, in a capacity overload condition.

Embodiments of the present invention provide an integrated node used to interface between a remote host server and the plurality of remote subsystems in a process automation environment to provide, in turn, for a single point of

control for data collection, monitoring, and restoration responsive to timestamps being synchronized to a single timing source, thereby enabling a more uniform basis for collection and restoration of data. Accordingly, embodiments of the present invention provide machines, computer-readable media having computer programs or computer program product stored thereon, and computer-implemented methods to provide an integrated node for data acquisition from process automation remote subsystems.

Exemplary embodiments of an integrated node, for example, integrates the functions of controller units, communications networking devices, and data storage servers into one unit. Embodiments of an integrated node can also, for example, employ an Ethernet switch to support networking over multiple communication interfaces and transmit process data to a remote host sever over TCP/IP (transmission control protocol and the internet protocol, also referred to as the internet protocol suite), thereby beneficially reducing the number of hardware components needed and allowing a simpler support model. Further, embodiments of an integrated node, for example, can employ an OPC server (also known as "OLE for Process Control"), or any suitable server or drivers known to those having skill in the art, to support multiple communication protocols. Even further, embodiments of an integrated node can comprise a PLC or RTU, or employ the functionality of a PLC or RTU, for example through hardware or software, to issue commands and collect and process data according to multiple process automation protocols without the need for multiple PLC or RTU components, thereby further reducing the number of hardware components needed and allowing a simpler support model. Furthermore, embodiments of an integrated node beneficially reduce the potential for data collection conflicts by providing time synchronization among the subsystems and the remote server and beneficially providing network monitoring and failure recovery by restoring data transmissions in the event of a communications failure, including any type of network failure or systems failure, between the integrated node and the plurality of remote subsystems or between the integrated node and the remote server. Accordingly, embodiments of an integrated node simplify the support model, including deployment, maintenance, and operation, of a process automation system by combining multiple systems into one system that provides multi-system functionality by incorporating the functionality of a PLC, RTU, and Ethernet switch and supporting multiple interfaces, multiple protocols, and field-system data retention through the addition of local data storage capacity.

Still further, the use of an integrated system, e.g., an embodiment of an integrated node, provides for a central point of control to enforce time synchronization for the data and among the host, subsystems, and upper application layers. For example, embodiments of an integrated node advantageously combine a TCP/IP Ethernet Switch, PLC or RTU logic, input/output interfaces supporting multiple communication protocols and enabled with data storage capability, FTP client/server support, and OPC interface capabilities. Embodiments of an integrated node, for example, advantageously store data having time-synchronization capability with the remote host server, thereby allowing the automation system to better tolerate failure or interruption of communications with the host or in the network, to minimize collection conflicts between captured data and host data used for simulation and optimization, and minimize risk that a network failure or a host failure will result in loss of the collected data during the outage period, essentially regenerating data not transmitted during an outage or overload condition. Yet further, embodiments of an integrated node allow for reduced power requirements by minimizing the number of hardware components, and the associated power and floor space requirements, in the field and by simplifying the support model in supporting any of multiple protocols and interface types.

An exemplary embodiment, for example, provides a programmable logic controller having a central processing unit and a memory to allow a remote host to interface with a plurality of remote subsystems to thereby define an integrated node. Although an embodiment of an integrated node is described as being a programmable logic controller, the integrated node can also be any computer known to those having skill in the art, having suitable functionality, including, for example, a computer with programmable logic controller functionality, a remote terminal unit, or a computer with remote terminal unit functionality. The integrated node can be constructed to withstand indoor and outdoor conditions, with an operating environment in a range of about 10 to 35 degrees Celsius, indoor, and about −20 to 70 degrees Celsius, outdoor.

Embodiments, for example, can further include a network interface for routing network connections to and with a remote host and a plurality of remote subsystems. Embodiments of an integrated node also include a protocol translator or translation server or suitable drivers to convert or to translate communications with each of a plurality of remote subsystems according to any of a number of messaging protocols known to those having skill in the art. Also, embodiments of an integrated node can include an input/output unit positioned to transfer communications between and among the node and the remote subsystems and the remote host. The embodiments of an integrated node further can include a database or a database server positioned to archive data acquired from the subsystems in time-stamped archive files, each time-stamped archive file corresponding to a respective remote subsystem.

Embodiments can even further include computer programs or computer program products for managing data transmissions between the node and the subsystems and between the node and the remote host. As one skilled in the art will appreciate, the present invention is not limited to embodiments using a single computer program or computer program product. For example, one skilled in the art will appreciate that the present invention or particular functions or operations embodying the present invention could be also be embodied in multiple computer programs or multiple computer program products, separate computer programs or separate computer program products, combined hardware products and multiple computer programs or multiple computer program products, or a single computer program or single computer program product having the functionality of one or more computer programs or computer program products described herein. Embodiments of a computer program or a computer program product can be stored in or on a non-transitory computer-readable storage medium, such as a memory, and operable on a processor, the memory being a tangible and non-transitory computer-readable storage medium. Embodiments of a computer program comprise a set of instructions to be executed on the processor.

The set of instructions in the computer program or computer program product, as can be shown with reference to FIG. **8** for example, can include an instruction to synchronize **801** an internal clock in the remote host and an internal clock in each of the remote subsystems, thereby resulting in the remote host and the remote subsystems being time-synchronized with the remote host according to a uniform time. The set of instructions can also include an instruction to synchronize an internal clock in other hardware or software components of the integrated node, as will be understood by those

having skill in the art. Time synchronization can be performed continuously or on demand, based on preset synchronization criteria. Further, embodiments can include an instruction to acquire **802** time-stamped process data at a pre-defined rate from each of the subsystems, which are time-synchronized. The integrated node, for example, can acquire time-stamped process data at a preselected rate of once every second. The time-stamp can indicate, for example, the date and time at which the process data was generated. The time-stamp can be applied, for example, by either of the remote subsystem or the integrated node, provided that each of the remote subsystem and the integrated node are synchronized according to a uniform time. As one having skill in the art will appreciate, the time-stamp can indicate the time at which the process data was generated or perhaps, any other time that is relevant to the process data.

Embodiments of the present invention can further provide instructions to, upon receiving the time-stamped process data from a remote subsystem, determine whether the time-stamped process data constitutes an exception responsive to preselected exception criteria. As one skilled in the art will appreciate, the instructions for determining exception criteria can be executed either at the integrated node, at the remote subsystem, or at the remote host. When the computer program product having instructions is executed at the remote subsystem, the remote subsystem communicates an alarm to the integrated node to be received by the integrated node. A step of determining that the acquired time-stamped process data satisfies pre-defined exception criteria can be performed by the integrated node, whereby the integrated node then reports an exception alarm to the remote host so that the remote host receives the alarm, for example, for processing at the remote host. For example, the remote host can then execute instructions responsive to the alarm, for example, to relay or present the alarm to a human user or to cause the remote host to issue a command to the integrated node in response to the alarm, which the integrated node may later receive and process to thereby affect the operation of the integrated node or any of the remote subsystems using the PLC or RTU functionality. Once the integrated node acquires the time-stamped process data, the computer program product in the integrated node can archive **803** the time-stamped process data in a time-stamped archive file pursuant to such an instruction. The time-stamped archive file can be time-stamped responsive to the date and time, for example, the date and time at which the process data was generated for each respective time-synchronized subsystem. In certain embodiments, data contained within the archive file does not require scaling, but one skilled in the art will appreciate that scaling may be implemented as necessary. The archive file can be time stamped by name, for example, having a name fitting the format YYYY-MM-DD.CSV, where YYYY is the numeric year, MM is the numeric month, and DD is the numeric day. Furthermore, archive files can be stored in a time stamped directory, also time stamped by name, for example, having a name with the first three letters of the month followed by the last two digits of the year YY, i.e., MMMYY (e.g., "SEP07").

Embodiments of a computer program product stored in an integrated node can also contain computer program product having instructions to receive and handle **804** a command from the remote host at a second pre-defined rate to transmit certain time-stamped process data from the integrated node to the remote host, and in response thereto, the computer program product can include instructions to extract **805** from at least one time-stamped archive file the certain time-stamped process data responsive to the command. Also, the computer program product, when executed, can transmit **805** to the remote host the time-stamped process data responsive to extracting the time-stamped process data from the archive file.

Embodiments of the present invention can also provide an intergraded node including a computer program or computer program product to monitor and recover transmissions between the integrated node and a plurality of remote subsystems. As one skilled in the art will appreciate, the invention is not limited to embodiments using a single computer program or computer program product. For example, one skilled in the art will appreciate that the present invention or particular functions or operations embodying the present invention could be also be embodied in multiple computer programs or multiple computer program products, separate computer programs or separate computer program products, combined hardware products and multiple computer programs or multiple computer program products, or a single computer program or single computer program product having the functionality of one or more computer programs or computer program products described herein. Embodiments of a computer program or a computer program product can be stored in or on a non-transitory computer-readable storage medium, such as a memory, and operable on a processor, the memory being a tangible and non-transitory computer-readable storage medium. Embodiments of a computer program comprise a set of instructions to be executed on the processor.

The set of instructions in the computer program or computer program product, for example, can include an instruction to detect a communication failure between the integrated node and any of the plurality of remote subsystems, including detecting the time of the communication failure. Also, embodiments of a computer program product instruct the integrated node to detect a corresponding communications recovery between the integrated node and the subsystem for which a communications failure was detected, including detecting the time of the communications recovery. After detecting both the communications failure and the communications recovery, the computer program product can further include instructions that, when executed by the processor, instruct the integrated node to retrieve a data file or a plurality of data files from the remote subsystem for which a communications failure and communications recovery was detected. The computer program product can further include instructions that, when executed by the processor, instruct the integrated node to extract time-stamped process data from the data file or files retrieved, responsive to retrieving the data file or data files. The time-stamped process data can be extracted starting from the time of the communications failure and ending at the time of the communications recovery. The computer program product can further include instructions that, when executed by the processor, instruct the integrated node to transmit the extracted process data to the remote host responsive to extracting the process data.

Embodiments of an intergraded node can also include a third computer program or computer program product for monitoring and recovery of transmissions between the integrated node and the remote host. As one skilled in the art will appreciate, the present invention is not limited to embodiments using a single computer program or computer program product. For example, one skilled in the art will appreciate that the present invention or particular functions or operations embodying the present invention could be also be embodied in multiple computer programs or multiple computer program products, separate computer programs or separate computer program products, combined hardware products and multiple computer programs or multiple computer program products, or a single computer program or single computer

program product having the functionality of one or more computer programs or computer program products described herein. Embodiments of a computer program or a computer program product can be stored in or on a non-transitory computer-readable storage medium, such as a memory, and operable on a processor, the memory being a tangible and non-transitory computer-readable storage medium. Embodiments of a computer program comprise a set of instructions to be executed on the processor.

The set of instructions in the computer program or computer program product, for example, can include an instruction to detect a communication failure between the integrated node and the remote host, including detecting the time of the communication failure. Also, embodiments of a computer program product can further include instructions that, when executed by the processor, instruct the integrated node to monitor for and to detect a corresponding communications recovery between the integrated node and the remote host, including detecting the time of the communication recovery. Embodiments of a computer program product can further include instructions that, when executed by the processor, instruct the integrated node to report the time of the communication failure and the time of the communication recovery to the remote host, responsive to detecting both the communications failure and the communications recovery, so that the remote host can initiate a restoration of missing data. The computer program product can further include instructions that, when executed by the processor, instruct the integrated node to extract time-stamped process data from a time-stamped archive file responsive to the time of the communications failure and the communications recovery, and then, to transmit the extracted time-stamped process data to the remote host so that the remote host can receive the time-stamped process data. Embodiments of a computer program product can further include instructions that, when executed by the processor, instruct the integrated node to monitor the communications link between the integrated node and the remote host to detect **806** bandwidth starvation in the data transmissions, and to buffer **808** the data transmissions responsive thereto.

In another exemplary embodiment of the present invention, a programmable logic controller having a central processing unit and a memory can allow a remote host to interface with a plurality of remote subsystems, to thereby define an integrated node. Although embodiments of an integrated node are described as being a programmable logic controller, the embodiments of an integrated node can also be any computer known to those having skill in the art, having suitable functionality, including, for example, a computer with programmable logic controller functionality, a remote terminal unit, or a computer with remote terminal unit functionality. Embodiments of an integrated node can be constructed to withstand indoor and outdoor conditions, with an operating environment in a range of approximately 10 to 35 degrees Celsius, indoor, and in a range of approximately −20 to 70 degrees Celsius, outdoor. Embodiments of an integrated node can further include an input/output unit positioned to transfer communications between the integrated node and any of the plurality of remote subsystems or the remote host. The integrated node can also include a database server positioned to archive data acquired from the plurality of remote subsystems in one or more time-stamped archive files, for example, with each of the one or more time-stamped archive files corresponding to a respective subsystem.

Embodiments of the present invention can further provide an integrated node having a time-synchronizer to synchronize an internal clock in the remote host and in each of the remote subsystems, thereby resulting in the remote host and remote subsystems being time-synchronized with the remote host, according to a uniform time. Time synchronization can be performed, as will be understood by those having skill in the art, continuously or on-demand based on preset synchronization criteria. The integrated node can also include a data acquirer positioned to periodically acquire time-stamped data from each of a plurality of remote time-synchronized subsystems. The data acquirer can further be positioned to archive the time-stamped data using the database server.

The integrated node can also include an exception reporter positioned to determine exceptions in the acquired time-stamped data, and upon determining an exception, to report the exceptions to the remote host. The integrated node can further include a data uploader that is positioned to periodically upload archived time-stamped data to the remote host. Embodiments of an integrated node can further include a subsystems restorer positioned to detect a communications failure between retrieved time-stamped data from any of the plurality of remote subsystems, for example, upon detecting a communications failure and a communications recovery between the integrated node and any of the remote subsystems. Embodiments of an integrated node can even further include a host restorer positioned to restore data transmissions to the remote host responsive to a communications failure between the integrated node and the remote host.

Another exemplary embodiment of the invention includes computer-implemented methods providing a uniform recovery of interrupted data transmissions between a plurality of remote subsystems and an integrated node being is positioned to allow a remote host to communicate with a plurality of remote subsystems. Embodiments of methods include, for example, detecting a time of a communications failure and a time of a corresponding communications recovery in a communications link between the integrated node and any of the remote subsystems, provided that each of the integrated node and the remote subsystems are time-synchronized according to a substantially uniform time source. The method further includes retrieving at least one data file containing time-stamped process data from any of the plurality of subsystems responsive to the time of the communications failure and a corresponding communications recovery. Embodiments of methods further include restoring time-stamped process data to the remote host computer responsive to the retrieving operation.

Another exemplary embodiment of the present invention provides a computer-implemented method for allowing a uniform recovery of interrupted data transmissions between a remote host and an integrated node, such as a PLC, that is positioned to acquire process data from a plurality of remote subsystems. The method includes detecting a time of a communications failure and a time of a corresponding communications recovery in a communications link between the integrated node and the remote host, provided that the integrated node and the remote host are time-synchronized according to a uniform time source. Embodiments of methods include reporting the time of the communications failure and the time of the communications recovery to the remote host so that the remote host can initiate a restoration of missing data as a result of the communications failure.

In addition, embodiments include other machines, systems, computers, computer programs, computer program products, and associated computer-implemented methods of providing an integrated node for data acquisition, including monitoring and restoring data transmissions in the event of a communication failure, as will be understood by those having skill in the art.

Embodiments of the present invention also include a data verifier to substitute out-of-bounds measurements in the time-stamped data with new measurements responsive to a preconfigured filtering scheme and to suspend data acquisition upon detecting an out-of-bounds measurement, to thereby define a plurality of verified measurements. Such embodiments also include a data reconciler to determine an operating state of the plurality of remote time-synchronized subsystems and to reconcile the plurality of verified measurements responsive to the operating state of the plurality of remote time-synchronized subsystems. Embodiments of a data verifier can include, for example, a computer program product stored in memory that, when executed by the central processing unit, cause the integrated node to determine that a first measurement in the time-stamped data acquired from the plurality of remote time-synchronized subsystems is out-of-bounds responsive to a predefined upper bound and a predefined lower bound. The data verifier can also cause the integrated node to substitute a second measurement for the out-of-bounds first measurement, the second measurement being one of a minimal value or a maximal value of a preselected interval of past measurements, a last good measurement, an average of the upper bound and the lower bound, an average of a preselected number of measurements or of an interval of past measurements, the upper bound, the lower bound, or any preselected value. Further, the time-stamped data can include the substituted second measurement to define a plurality of verified measurements. The data verifier can also cause the integrated node to command the data acquirer to suspend acquiring time-stamped data from any of the plurality of remote time-synchronized subsystems responsive to determining an out-of-bounds measurement in the time-stamped data.

Embodiments including a data reconciler can further include, for example, a computer program or a computer program product stored in a memory that, when executed by the central processing unit, causes the integrated node to determine an operating state of one or more process units of a plurality of remote time-synchronized subsystems, the determining operation being responsive to a plurality of verified measurements from one or more of the plurality of remote-time synchronized subsystems. The data reconciler including such computer program or computer program product, upon execution of the computer program or computer program product, can also cause the programmable logic controller to determine a reconciliation model responsive to the plurality of verified measurements, the reconciliation model corresponding to one or more process units and the operating state for the one or more process units. The data reconciler can also cause the integrated node to reconcile the plurality of verified measurements responsive to the reconciliation model, the reconciliation operation being a sequential quadratic programming algorithm, to thereby define a plurality of reconciled measurements. The data reconciler can also cause the programmable logic controller to detect a change in the operating state of one or more process units responsive to a later plurality of verified measurements. The data reconciler can also cause the programmable logic controller to determine a new reconciliation model for the one or more process units responsive to the change in the operating state detected so that the reconciliation operation can proceed responsive to the new reconciliation model.

BRIEF DESCRIPTION OF DRAWINGS

So that the manner in which the features and benefits of the invention, as well as others that will become apparent, may be understood in more detail, a more particular description of the invention briefly summarized above may be had by reference to the embodiments thereof, which are illustrated in the appended drawings, which form a part of this specification. It is also to be noted, however, that the drawings illustrate only various embodiments of the invention and are therefore not to be considered limiting of the invention's scope as it may include other effective embodiments as well:

FIG. **1**A is a schematic block diagram of an integrated node interfacing with a remote host computer and a plurality of remote subsystems according to an embodiment of the present invention.

FIG. **1**B is a schematic block diagram of an integrated node interfacing with a remote host computer and a plurality of remote subsystems having various different communication protocols according to an embodiment of the present invention.

FIG. **2**A is a schematic flow diagram of an integrated node acquiring process data from the remote subsystem, reporting exceptions to the remote host computer, and transmitting data to the remote host computer according to an embodiment of the present invention.

FIG. **2**B is a schematic flow diagram of an integrated node restoring data at the remote host computer in response to detecting a communications failure and recovery, including retrieving data from the remote subsystem and transmitting data to the remote host computer, according to an embodiment of the present invention.

FIG. **2**C is a schematic flow diagram of an integrated node restoring data at the remote host computer in response to a communication failure and recovery between the remote host computer and the integrated node, including extracting process data from the archive file at the integrated node and transmitting the data to the remote host computer according to an embodiment of the present invention.

FIG. **2**D is a schematic flow diagram of an integrated node performing the functions of a data validation module, data reconciler, and reporting module according to an embodiment of the present invention.

FIG. **3** is a schematic diagram of an integrated node showing the operation of data acquisition by the integrated node, including exception reporting to the remote host computer, and the operation of data retrieval from, and data transmission to, the remote host computer via the integrated node, according to an embodiment of the present invention.

FIG. **4**A is a schematic diagram of an integrated node showing the data acquisition operation performed by the integrated node for a particular span of time according to an embodiment of the present invention.

FIG. **4**B is a schematic diagram of an integrated node showing the data acquisition operation in which a monitoring operation detects a communication failure and a communication recovery over a particular span of time according to an embodiment of the present invention.

FIG. **4**C is a schematic diagram of an integrated node showing the restoration operation from a remote subsystem responsive to the monitoring operation detecting a communication failure and a communication recovery over a particular period of time according to an embodiment of the present invention.

FIG. **4**D is a schematic diagram of an integrated node showing transmission operation transmitting the data recovered by the data restoring operation to the remote host computer according to an embodiment of the present invention.

FIG. **5** is a schematic diagram of an integrated node showing the operation of data retrieval by a remote host computer in which the remote host computer or the integrated node

detects a communication failure and a communication recovery over a particular period of time, including showing a transmission operation to transmit the data recovered to the remote host computer, according to an embodiment of the present invention.

FIG. **6** is a flowchart illustrating an exemplary process flow for the data verifier according to an embodiment of the present invention.

FIGS. **7**A-**7**B is a flowchart illustrating an exemplary process flow for the data reconciler according to an embodiment of the present invention.

FIGS. **8**-**11** are schematic flowcharts illustrating one or more exemplary computer programs or computer program products according to embodiments of the present invention.

DETAILED DESCRIPTION OF THE INVENTION

An embodiment of an integrated node **100** can be shown, as illustrated in FIGS. **1**A-**1**B, having a central processing unit **105** and a memory **160** to allow a remote host **110** to interface with a plurality of remote subsystems **120**. Integrated node **100** is a programmable logic controller (PLC), meaning any programmable logic controller (PLC), remote terminal unit (RTU), PLC with RTU functionality, RTU with PLC functionality, or any type of computer, terminal, server, system, node, or unit or other machine as understood by those having skill in the art that can incorporate PLC or RTU functionality or both. The integrated node can be constructed to withstand indoor and outdoor conditions, with an operating environment in a range of about 10 to 35 degrees Celsius, indoor, and about −20 to 70 degrees Celsius, outdoor. The integrated node **100** is connected to any of the remote host computer **110** or remote subsystems **120** by way of communication links **115** and **125**, respectively, as will be understood by those having skill in the art. The integrated node **100** includes a protocol translator or translation server **102**, which may also be protocol translation drivers operable on the central processing unit **105**, as will be understood by those having skill in the art, network interface **103**, input/output unit **104** and database server **101**, which are operable on the central processing unit **105**. The central processing unit (CPU) **105** can have an architecture selected such that at peak load conditions the CPU utilization does not exceed 50%. A memory **160**, being a non-transitory computer-readable storage medium, is provided and can be sized such that 50% of total memory supplied is available after all memory requirements for system and application software are utilized at peak load conditions. The CPU **105** and memory **160** can be selected to adequately support switchover between a primary and a redundant host server without adverse effect on programs, control application, tasks running on the node, and field data stability. The PLC or RTU functions of the integrated node **100** enable data processing in the integrated node **100** and also enable data collection from, and control of, the plurality of remote subsystems **120**. PLC and RTU functionality includes PLC-like and RTU-like configurations that combine features of PC-based control systems with that of a typical PLC or RTU, such as a programmable automation controller (PAC) or distributed RTU, including, for example "smart" RTU or PLC technology implemented with IEC 61131-3 (Ladder Logic), as will be understood by those having skill in the art, to enable autonomous execution of simple logic processes without involving a master computer, including the following operations: arithmetic functions: add, subtract, multiply, divide, square root, binary-coded-decimal (BCD) to integer, integer to BCD; logic functions: and, or, exclusive or, not, flip/flops; math instructions for arithmetic and logic functions to convert analog input to real (floating point) numbers; shift register functions: bit shift left, bit shift right; comparison functions: less than, greater than, less than or equal, greater than or equal, equal, not equal; timer/counter functions: count-up, count-down, time up, time down (with accumulator, preset and time-base sub-elements) time base 0.01 seconds and 1.0 seconds; relay contact elements, and transition; and relay coil elements: standard, latch, and unlatch, as will be understood by those having skill in the art.

The integrated node **100** also supports a local programming interface over a computer, such as through computer terminal having one or more input devices and one or more display devices that are accessible to a human user (not pictured) or, for example, by using the remote host computer **110**. The integrated node **100** can further support proportional-integral-derivative control (PID), closed loop control, open loop control, and logic and sequence functions. Furthermore, the integrated node **100** can support report-by-exception and report-all for status data. Where process application calculations or compensation algorithms are required, for example, in power, gas, or liquid flow operations, the integrated node **100** can perform required calculations independent of any external computer. The integrated node **100** can support, for example, 100 milliseconds (msec) time resolution (e.g., after filtering and buffering of signals) for discrete inputs for sequence-of-events functions.

Embodiments including a plurality of remote subsystems **120** can include, for example, intelligent field systems such as permanent down hole monitoring ("PDHM") systems, electrical submersible pump ("ESP") systems, smart well completion ("SWC") systems, and flow meter systems, and any of the types of Intelligent Equipment Devices ("IED") that can be used, for example, in electrical substation automation, utilities, and transportation sectors, as will be understood by those having skill in the art. Remote subsystems **120** can perform tasks including processing of measurement and control data and signal conversions. Remove subsystems **120** can also adapted to be programmed so as to communicate with other field devices, for example, independent of the integrated node. For example, intelligent sensors, actuators and controllers can be connected to a network by means of communication busses, interface boards, cables, and accessories. Such devices can be configured, for example, using various configuration and control applications being known to those having skill in the art. With respect to system operations, those having skill in the art will appreciate the need to optimize adaptation of data and system topology, the integration of the systems, and grouping of field instruments. As one skilled in the art will further appreciate, the present invention is not limited to the use of remote automation subsystems in any particular industry, sector, or operating environment, and can serve different networking operating environments, including, for example, intelligent field systems for oil and gas, electrical substations/power grid systems, and remote security systems, and enterprise systems. The remote host **110** can be any type of remote host computer for management or hosting of process automation functions as will be known or available to those having skill in the art, for example, a SCADA host.

As can be shown with reference to FIGS. **1**A-**1**B, the integrated node **100** includes a network interface **103** for routing network connections with a remote host and a number of subsystems. The local network interface **103** can be, for example, a network switch including a network bridge for processing and routing functions at the data link layer (Layer 2) of the Open System Interconnection ("OSI") Reference Model or any known Layer 3 switch or router or any known

multi-layer switch for processing and routing data at the data link or network layers, as will be understood by those having skill in the art, and including, for example, general functional capabilities according to the following IEEE (Institute of Electrical and Electronics Engineers) standards: 802.1D spanning tree protocol, 802.1P QoS tagging and port-based priority, 802.1Q frame tagging and VLAN trunking, 802.1w rapid spanning tree, 802.1X port-based network access control, 802.3 Ethernet group, 802.3u fast Ethernet, 802.3z gigabit Ethernet (fiber-based), 802.3ab gigabit Ethernet (copper-based; unshielded twisted pair category 5e, or 6 cabling), 802.3ad link aggregation, 802.3x full duplex flow control. In addition to rapid spanning tree, for example, the local network interface can support the use of proprietary protocols within a fiber optic ring with the fastest convergence time possible in the event of device failure or fiber optic cable cuts. Furthermore, an embodiment of an integrated node **100** can provide a network solution based on ring topology enchantments that are able to increase ring reliability, reduce bandwidth requirements, and decrease network delay. Embodiments of the present invention can serve different networking operating environments, including, for example, intelligent field for oil and gas, substations/power grid, and remote security, and can utilize and can be extended for enterprise applications.

In addition, network communication links **125** may include, for example, any of 100BaseTX, EIA/TIA Category 5, 6, or 7 UTP two-pair wiring, one user per segment up to 100 meters long, using an RI-45 connector with a physical star topology and a logical bus; 1000Base-T, Category 5, four-pair UTP wiring up to 100 meters long; 1000Base-SX, multimode fiber using 62.5 and 50-micron core, using 850 nanometer laser for up to 220 meters with 62.5-micron, up to 550 meters with 50-micron; 1000BaseLX, single-mode fiber that uses a 9-micron core and 1310 nanometer laser and can go from 3 kilometers up to 10 kilometers; or 1000BaseLH/ZX, which operates on ordinary single-mode fiber optic link and spans up to 43.4 miles long. The network interface can also implement the following specifications for physical construction: IEC60068-2-6, mechanical Stability for Vibration; IEC60068-2-27 and IEC 60068-2-29, mechanical stability for shock; EN 61000-6-2 and -4, electromagnetic characteristics for interference immunity; IGMPv1/RFC1112; IGMPv2/RFC 2236; SNMPv3/RFC 3410; MIB II/RFC 1158; RMON/RFC 1757; IP20 (IEC 536) ingress protection; IP67, ingress protection.

An exemplary embodiment of an integrated node **100**, as can be shown in FIG. **1**A and FIG. **2**A, for example, includes an input/output unit **104** positioned to transfer communications between the integrated node **100** the plurality of remote subsystems **120** and the remote host computer **110**. The input/output unit **104** provides both serial and Ethernet interfaces over communication links **115** and **125**, which can be any type of serial or Ethernet links, including 10/100/1000 Mb/s Ethernet speed that is operable to communicate on different communication media such as fiber optic, copper, VSAT, and or wireless. Embodiments of the present invention also allow seamless communication through readily available wireless systems and services. For example, corporate Wi-Fi networks (IEEE 802.11a/b/g/n) in conjunction with cellular networks (GSM/TETRA) can be used to transport field data in a fully redundant and prioritized manner. Accordingly, connectivity (cost and quality) is optimized diversity in network connectivity can be achieved. The input/output unit **104** can support, for example, any of analog inputs, analog outputs, digital inputs, digital outputs, pulse inputs, and pulse outputs for both wired and wireless instrumentation interfaces (analog, digital and wireless ISA 100.11a/WHART/Zigbee). For example, in addition to analog communications using the standard analog signal (4-20 milliamps (mA)) employed at the process level, digital networks can be used to communicate according to protocols standardized according to the Fieldbus Committee of the International Electrotechnical Commission (IEC TC65 SCC)/International Society for Measurement and Control (ISA), such as the Field Bus type 61158, as will be known by those having skill in the art.

As can be shown with reference with FIG. **1**B, an exemplary embodiment of an integrated node **100** can further include a protocol translator or translation server **102** to translate communications with each of the remote subsystems **120** according to any one or more of a plurality of messaging protocols (as can be shown with reference to the arrows connecting protocol translator or translation server **102** and the plurality of remote subsystems **120**). As will be understood by those having skill in the art, a protocol translator or translation server **102** can be configurable, such as being configured by a user, for example through a configuration tool interface, to support communications according to various protocols, including various protocols over serial and Ethernet physical interfaces, such as Serial Modbus, Modbus over IP (Internet Protocol), Highway Addressable Remote Transducer (HART) Protocol, Foundation Fieldbus, Distributed Network Protocol (DNP), IEC 61850, ISA100.11a, Wireless HART, ZigBee, and Ethernet/IP (Ethernet Industrial Protocol), including supporting subsystems data exchange. Furthermore, the integrated node **100** can configurable, such as being configured by a user, for example through a configuration tool interface, to support different connection types, protocol types, and speed rates.

Furthermore, in certain embodiments, the protocol translator or translation server **102** can be configured so that the node, the remote host, and each of the plurality of remote subsystems are time-synchronized based on a uniform timing source, as is described further herein with respect to the computer programs or computer program products. For example, the protocol translator or translation server **102** can facilitate transmitting and/or writing a time stamp (also referred to as a timing stamp) to a record at one or more of the plurality of remote subsystems utilizing telecontrol protocols supported by the communication protocol implemented at the remote subsystem (e.g., Modbus and DNP). The timestamp portion of the record, for example, can include six (6) consecutive registers (32-bit unsigned integers), as will be understood by those having skill in the art, containing data for year, month, day, hour, minute, and seconds. Time synchronization may also be achieved, for example, for end-to-end Ethernet based devices using NTP (Network Time Protocol), SNTP (Simple Network Time Protocol) based on Coordinated Universal Time (UTC), local/remote GPS units, or Precession Timing Protocol (PTP, IEEE 1588).

As illustrated in FIG. **1**B, the protocol translator or translation server **102** also includes standards-based functionality for consistent access to field data at the remote subsystems according to any of the protocols utilized by the subsystems, including, for example, the functionality of an OPC (OLE for Process Control) driver or OPC server to define a common interface for data at the node and at the remote host computer. Accordingly, only one interface is required at the node and the remote host computer to exchange data with the remote subsystems, whereas the communication links with remote subsystems operate according to any of a plurality of supported communication protocols. As will be appreciated by those having skill in the art, OPC interfaces can facilitate intercommunications between different hardware and software, allow-

ing communication even between devices that were not originally intended to be part of an industrial network or process automation environment.

Embodiments of an intergraded node can further include computer programs or computer program products, such as the data acquirer **161**, as can be shown with reference to FIG. **2**A, for managing data transmissions between the node and the subsystems and the node and the remote host. As one skilled in the art will appreciate, the present invention is not limited to embodiments using a single computer program or computer program product. For example, one having skill in the art will appreciate that the present invention can be embodied in multiple computer program products, multiple computer program products and hardware products, or combined in a single computer program product having the functionality of other computer program products described further herein. The computer programs or computer program product are stored on a memory **160**, the memory being a tangible, non-transitory computer-readable storage medium, and operable on a processor **105**. Computer programs or computer program product have a set of instructions stored therein, that when executed by the processor **105**, perform certain operations. The set of instructions in the computer program product **161**, for example, can include an instruction to synchronize an internal clock **311**, **321** in the remote host and in each of the remote subsystems, as depicted in FIG. **3**, thereby causing the remote host and the remote subsystems to be time-synchronized with the clock **301** in the remote host, according to a uniform time. The instructions, when executed, can also synchronize an internal clock in other hardware or software components of the integrated node **100**, as will be understood by those having skill in the art. Time synchronization can be performed continuously or on-demand, for example, based on preset synchronization criteria. As one skilled in the art will appreciate, time synchronization can be performed by a separate or stand-alone computer program product executed by a processor, for example, at the integrated node **100** or at the remote host computer **110**. In certain embodiments, the internal node **100** acquires, from each of the remote subsystems **120**, which have been time-synchronized, certain time-stamped process data, at a predefined rate. As can be shown with reference to the data flow path **200** in FIG. **2**A, the data flow path includes, for example, the network interface **103**, input output unit **104**, and protocol translator or translation server **102**. Once the integrated node **100** acquires the time stamped process data, instructions from the computer program product **161** at the integrated node, when executed at the processor, can archive the time-stamped process data in a time-stamped archive file in the database **101**.

In further detail, as can be shown with reference to FIG. **3**, which illustrates the operations performed by an embodiment including a data acquirer **161**. Variables (t_i), (t_s), and (t_h) are exemplary time references at the integrated node **300**, a remote subsystem **120**, and the remote host computer **310**, respectively. Times (t_i), (t_s), and (t_h) are synchronized so as to be uniform across each of the integrated node **300**, remote host computer **310**, and remote subsystem **320** at internal clocks **301**, **311**, and **321** therein, respectively. The integrated node **300** polls for sub-system or instrumentation data containing time and process variables (e.g., pressure, temperature, flow). The integrated node **300** acquires data, such as, for example, subsurface sensor and subsystem data, from the remote subsystem **320**, at a pre-defined rate **360** by polling the remote subsystem **320** at a time (t_i), shown where (t_i)=h, i, j, and k, the period between each of h, i, j, and k corresponds to the preselected rate **360**. The integrated node **320** can acquire data at a rate of one (1) sample per second with an execution cycle time ≤100 msec including input/output (I/O) scan and execution of any diagnostics and application programs. The data acquired **351***h*, **351***i*, **351***j*, **351***k* corresponds to polling at times (t_i)=h, i, j, and k and is time stamped respectively. The time-stamp can indicate the date and time at which the process data was generated. The time-stamp can be applied either by the remote subsystem or by the integrated node, given that each are synchronized according to a uniform time, Either of the remote subsystem **320** or the integrated node **300** can time-stamp the acquired data **351***h*, **351***i*, **351***j*, and **351***k* based on the uniform and synchronized clocks **321** and **301**, respectively. As can be shown with reference to FIG. **3**, the collected data **352** has been time-stamped by the remote subsystem **320**. As is shown in the drawing, time stamping by marking a time "h" is illustrated for exemplary purposes only. Those having skill in the art will recognize any suitable method or convention of time stamping data transmissions, for example, in time-stamped data files or packets. Collected data readings can be based on IEEE 32 floating points, and the timestamp portion of the record, for example, can include 6 consecutive registers (32-bit unsigned integers) containing data for year, month, day, hour, minute, and seconds.

As can be shown with reference to the archiving step **353** as illustrated in FIG. **3**, an archive file **354** can be populated with the time-stamped process data **352** responsive to the acquiring operation **351***h*. Although not illustrated for subsequent acquiring operations **351***i*, **351***j*, and **351***k*, those having skill in the art will appreciate that the same archiving process **354** can be followed as that illustrated for acquiring operation **351***h*. Archive file **354** corresponds to remote subsystem **320**; and as will be understood by those having skill in the art, as there are a plurality of remote subsystems **320**, there can be a corresponding plurality of archive files **354**, or for example, a plurality of archive files **354** for each process category. Furthermore, any of the plurality of archive files **354** can be time stamped and, thus, correspond to date and time of the data archived therein. Any of the plurality of archive files **354** can be in a comma-separated values (CSV) format, as will be understood by those having skill in the art, and stored in the integrated node **300**, continuously, based on the predefined polling rate **360**. For data contained within the archive file **354**, scaling is optional as will be understood by those having skill in the art. The archive file **354** can be time stamped by name, for example, having a name YYYY-MM-DD.CSV. Furthermore, archive files **354** can be stored in a time stamped directory, also time stamped by name, for example, having a name with the first three letters of the month followed by YY, i.e., MMMYY (e.g., Sep07). Archive file **354** can be stored in database **101**, as can be shown with reference to FIG. **1**A. Accordingly archive file **354** can be a daily archive file having stored therein acquired process data **352** and other acquired process data, such as data from acquisitions **351***i*, **351***j*, **351***k*, through **351***n* for any time n, representing the time of the last data acquisition of the day, and being updated responsive to the predefined polling rate **360**. As one having skill in the art will appreciate, the present invention is not limited to this particular naming convention or daily archival window, and other naming conventions or archival windows are within the scope of the invention and this disclosure. Database or database server **101** is configured to allow copy access, including FTP functions, by the remote host **310** even while data therein is being continuously updated by archiving process **353**. Those having skill in the art will appreciate various techniques to ensure no file access violations during the process of accessing the file, for example, by the remote host **300**.

Upon receiving the time-stamped process data from a remote subsystem, the integrated node can determine whether the time-stamped process data constitutes an exception based on pre-defined exception criteria. A computer program product, which can be shown, for example, with reference to FIG. **8**, FIG. **9**, and FIG. **10**, having instructions for such detection by comparing exception criteria **811** can be executed either at the integrated node, at the remote subsystem or at the remote host. When such a computer program product having such instructions is executed at the remote subsystem, the remote subsystem can further communicate or report **812** an alarm to the integrated node to be received by the integrated node according to further instruction in the computer program product. The step of determining that the acquired time-stamped process data satisfies pre-defined exception criteria can be performed at the integrated node, for example, as can be shown with reference to FIG. **2**A, more particularly, data flow path **210**. Data flow path **210** illustrates, for example, the integrated node **100** reporting an exception alarm to the remote host so that the remote host receives the alarm. Instructions for determining and reporting the exception alarm can be included in, for example, the data acquirer **161** or another computer program product or, perhaps, a hardware product operated by instructions from the data acquirer **161**. As can be further shown with reference to data flow path **210**, the reporting of an exception alarm includes data transmissions through input/output unit **104** and network interface **103** and in communication with remote host computer **110**.

In further detail, as shown in FIG. **3**, the integrated node **300** can be configured for reporting by exception. Responsive to the acquiring operation **351***h*, for example, the integrated node **300** can determine whether the time-stamped process data **352** satisfies pre-defined exception criteria, based on either percentage values or absolute values of process variable data. If an exception is determined **355**, the integrated node **300** can immediately and responsively report the exception to the remote host computer. The determining operation **355**, in the instructions included in the computer program product, can be made responsive to the acquiring operation, for example, **351***h*, and therefore the determining operation **355** can be performed continuously according to the same rate **360**. Once the exception is reported **356** to the remote host computer **310**, the remote host computer **310** can receive notice of the exception and can responsively issue a command to the integrated node **100**, to be processed by the integrated node **100**, having instructions for processing or handling the same **813**, for example, using the PLC/RTU functions of the integrated node **300** to thereby control any of the plurality of remote subsystems **320**.

An embodiment of computer program product **161** in the integrated node can also contain computer program product having instructions to receive a command from the remote host at a second pre-defined rate to transmit certain time-stamped process data from the integrated node to the remote host, and in response thereto, the computer program product includes in instructions to extract from at least one time-stamped archive file the certain time-stamped process data responsive to the command. Also, the computer program product includes instructions to transmit to the remote host the time-stamped process data responsive to extracting the time-stamped process data from the archive file. As can be shown with reference to data flow **220** in FIG. **2**A, time-stamped process data can be retrieved from the archive file database **101** and transmitted using the input/output unit **104** and the network interface **103**.

In further detail, as can be shown with reference to FIG. **3**, the remote host computer **310** can issue a command **380** to the integrated node **310** to collect archived process variable data, e.g., **352**, from the archive data file **354**, at a pre-defined rate, which can be, for example, once (1) every sixty (60) seconds, regardless of any report-by-exception dead-band **356**. The remote host computer **310** can issue a request, for example, using via file transfer protocol (FTP), to copy certain file or files from the integrated node **300** responsive to the current time (t_h) **311** at the remote host computer **310**. The integrated node **300** can responsively serve the existing archived data file, for example, the archived data file **354**, as requested. Further, the integrated node **300** can responsively extract certain archived process data **381** from the archived data file **354**, in particular, responsive to the time of the request (t_r) **301** at the integrated node **300**. Further, the integrated node **300** can responsively define a file **382** that is a subset of the archive file **354** containing data collected in the period corresponding to the period since the latest request **380**. As will be understood by those having skill in the art, the integrated node **300** can, responsive to the request by the remote host computer **310**, extract process data corresponding to any time parameter, from any archive file **354** of an existing plurality of archive files for multiple dates, subsystems, or other division to thereby extract data and define a file **382** to be transmitted **383** to the remote host computer **310**. Further, as will be understood by those having skill in the art, the foregoing extraction, definition, and transmission can be initiated responsive to a predefined rate or on an ad-hoc basis. After data extraction, the integrated node **300** can transmit data to the remote host computer **310** through a variety of techniques known to those having skill in the art, including, for example, using standard history transfer. As is explained further herein, the process for reading data by the remote host **310** can allow data restoration by the remote host **310** in the event of a communication failure, for example, using the integrated **300** node as the FTP server. Those having skill in the art, however, will appreciate that the host computer **310** can also be configured as the server, and the integrated node **300** as the client. Configuration of client/server interactions can be performed, for example, either at the integrated node **300** or at the remote host **310**.

Embodiments of an intergraded node can further include a computer program or a computer program product **162** to monitor and restore data transmissions between the integrated node **100** and the plurality of remote subsystems **120**, as can be shown with reference to FIG. **2**B. As one skilled in the art will appreciate, the present invention is not limited to embodiments using a single computer program or computer program product. For example, one having skill in the art will appreciate that the present invention can be embodied in multiple computer program products, multiple computer program products and hardware products, or combined in a single computer program product having the functionality of other computer program products described further herein. The computer programs or computer program product are stored on a memory **160**, the memory being a tangible, non-transitory computer-readable storage medium, and operable on a processor **105**. Computer programs or computer program product have a set of instructions stored therein, as can be shown with reference to FIG. **9**, that when executed by the processor **105**, perform certain operations. The set of instructions in the computer program product **162**, for example, can include an instruction to detect **901** a communication failure between the integrated node and any of the subsystems, including detecting the time of the communication failure. Also, the computer program product can include an instruction for the integrated node to detect a corresponding communications recovery between the integrated node and the

subsystem for which a communication failure was detected, including detecting the time of the communication recovery. Responsive to the detection of both the communication failure and the communications recovery, the computer program product **162** can instruct the integrated node **100** to retrieve **904** a data file or multiple data files from the subsystem for which a communication failure and communication recovery was detected. Responsive to retrieving the data file or files, the computer program product can provide one or more instructions to the integrated node to extract **905** time-stamped process data from the data file or files retrieved. The time-stamped process data can be extracted starting from the time of subsystem communication failure and ending at the time of the subsystems communication recovery. The data flow for the retrieval of process data can be shown with reference to the exemplary data flow **230** in FIG. **2**B, which includes the network interface **103**, input/output unit **104**, protocol translator or translation server **102**, and database server **101**. Responsive to extracting the process data, the program product can provide one or more instructions to the integrated node to transmit **806** the extracted process data to the remote host, as can be further shown with reference to the exemplary data flow **240** in FIG. **2**B, which includes the input output unit **104** and network interface **103** in communication with the remote host computer **110**.

As can be shown with reference to FIG. **3** and FIG. **4**A, embodiments of an integrated node can poll **450** a remote subsystem **420** at a pre-defined rate **476** to receive, at the same pre-defined rate, over communication links **451***h*, **451***i*, **451***j*, and **451***k* certain time-stamped industrial process data **452***h*, **452***i*, **452***j*, and **452***k*. Upon receiving the time-stamped industrial process data **452***h*, **452***i*, **452***j*, and **452***k* at times h, i, j, k, the data is archived **453***h*, **453***i*, **453***j*, and **453***k* in an archive file **454** corresponding to the date and time of the time-stamped industrial process data **452***h*, **452***i*, **452***j*, and **452***k*. The integrated node **400** can monitor the status of the communication links between the integrated node **400** and the plurality of remote subsystems **420**. Failure of the communication link can be detected and reported **902**, according to instructions therefore in the computer program product, to the remote host as a high priority alarm. In addition, those having skill in the art will appreciate that any failure may also be reported to other systems as a high-priority alarm, including, for example, other nodes, hosts, or subsystems. The computer program product can further include instructions to receive and handle **903** commands from the remote host to initiate the restoration as is described with respect to the instruction to retrieve **904**, extract **905**, and transmit **806**.

In further detail, can be as shown in FIG. **4**B, when there is a communications failure **461***i* at (t_i)=i and a communications recovery **461***k* at (t_i)=k (with respect to the data acquiring operation in FIG. **4**A) time-stamped process data **452***i*-**452***j*, i.e., **452***i*-**452**(*k*−1) are not collected at the times (t_i)=i and (t_i)=j, respectively. For an exemplary communications failure occurring in the communications between the integrated node **400** and any of the plurality of remote subsystems **420**, the integrated node, in particular the subsystems restorer **162**, can detect and log the time and date of when the communication failure occurred and when communications are restored. In further detail, when the communications recovery **461***k* is detected at (t_i)=k, time-stamped data file **452***k* can be received normally as can be shown with reference to FIG. **4**A. As will be understood by those having skill in the art, the integrated node **400** can determine which file or file(s) containing daily data (24 hours of data) is to be accessed and retrieved from the remote subsystem **420**. As can be shown with reference to FIG. **4**C, the operation of retrieving at least one data file **480** from remote subsystem **420** can be performed responsive to detecting the time of failure **461***i* and the time of recovery **461***k* and the operation of extracting **481** can be performed responsive to the times of failure (t_i)=i and recovery (t_i)=k, the time-stamped process data files **452***i*' and **452***j*' being extracted from the retrieved data file **480** (corresponding to the process data not collected in **452***i* and **452***j* as can be shown with reference to FIG. **4**B). That is, the integrated node can extract process data and time-stamp data from the CSV file or any pre-defined file data format starting from communication failure time and date and ending at communications restored time and date.

As can be shown with reference to FIG. **4**D, methods for transmitting the extracted process data to the remote host can be performed responsive to the extracting operation **481**. An exemplary embodiment of such a method can include, for example, performing a file transfer or a copy operation, such as through FTP, of the extracted process data **452***i*'-**452***j*' to the remote host computer **410**. The integrated node **400** can issue a command, such as an FTP copy command, to copy one or more data files responsive to the time and date of the communication failure and the time and date of the communications restoration. Where a plurality of subsystems **420** are connected to the same integrated node **400**, each integrated node **400** can perform the same process with respect to each of the plurality of subsystems **420**.

Another exemplary embodiment of such a method can include, for example, performing the file transfer or copy operation, such as through FTP, of a data file containing the extracted process data **452***i*' and **452***j*', such as a data file being provided in response to the time of failure (t_i)=i and the time of recovery (t_i)=k. respectively, for the detected communications failure and communications recovery. One skilled in the art will appreciate that the data file, for example, the archive file **382** as can be shown with reference to FIG. **3**, can be provided responsive to a command received from the remote host computer **410** to retrieve time-stamped process data, including, for example, data **452***i*' and **452***j*'. Upon an loss of data acquisition from the integrated node, for example, the remote host or the integrated node can detect the time at which communications were interrupted and time at which communications were restored. The remote host computer, furthermore, can retrieve recovered data, copying the recovered data into the remote host computer history, recreating one or more new CSV files pertaining to the missing data from the recovered file received from the node, and thereafter transferring the file(s) to an enterprise system, if necessary. Should the file transfer process fail, the file transmission process can be repeated until the file is copied successfully. Furthermore, upon detecting bandwidth starvation, the integrated node can store collected data and buffer affected data transmissions accordingly.

Embodiments of an integrated node also include a computer program product **163** for monitoring and recovery of transmissions between the integrated node and the remote host. As one skilled in the art will appreciate, the present invention is not limited to embodiments using a single computer program or computer program product. For example, one having skill in the art will appreciate that the present invention can be embodied in multiple computer program products, multiple computer program products and hardware products, or combined in a single computer program product having the functionality of other computer program products described further herein. The computer programs or computer program product are stored on a memory **160**, the memory being a tangible, non-transitory computer-readable storage medium, and operable on a processor **105**. Computer

programs or computer program product have a set of instructions stored therein, that when executed by the processor **105**, perform certain operations. The set of instructions in the computer program product **163**, which can be shown with reference to FIG. **10**, for example, can include an instruction to detect **1001** a communication failure between the integrated node and the remote host, including detecting the time of the communication failure. Also, the computer program product can provide one or more instructions to the integrated node to detect **1001** a corresponding communications recovery between the integrated node and the remote host, including detecting the time of the communication recovery. After detecting the communication failure and the communications recovery, the computer program product can provide one or more instructions to the integrated node to report **1002** the time of the communication failure and the time of the communication recovery to the remote host so that the remote host can initiate a restoration of missing data. The computer program product can further provide one or more instructions to the integrated node to receive and handle **1003** commands from the remote host to initiate the restoration of missing data. The computer program product can even further provide one or more instructions to the integrated node to extract **1004** time-stamped process data from a time-stamped archive file responsive to the time of the communication failure and recovery and then to transmit **806** the extracted time-stamped process data to the remote host. The program product can further provide one or more instructions to the integrated node to monitor **807** the communications link between the integrated node and the remote host to detect bandwidth starvation in the data transmissions, and to buffer **808** the data transmissions responsive thereto. The data flow **250** for the foregoing exemplary embodiment can be shown with reference to FIG. **2**C, which includes the network interface **103**, input/output unit **104**, and the database server **101**.

In further detail, FIG. **5** illustrates the recovery of process data responsive to a communication failure and communication recovery in the communications link between the integrated node **500** and the remote host computer **510**, particularly with respect to data retrieval by the remote host computer **310**, which is described herein with respect to FIG. **3**. The node **500** and remote host **510** are depicted, for exemplary purposes, over a span of time (represented going from left to right in the Figure) starting from time (t_i)=p, when the remote host **510** performs a normal successful retrieval of process data from the integrated node **500**, which can be shown with reference to FIG. **3**, wherein the remote host **310** retrieves a data file **382** at the rate **380'**. Returning to FIG. **5**, when time advances to time (t_i)=q (whereas q−p is understood to be a period corresponding to the rate **390**) the integrated node **500** can detect a failure in communications **520***q* between the integrated node **500** and the remote host computer **510**. Alternatively, the remote host computer **510** can detect the communication failure **520***q*. With further reference to FIG. **5**, when time advances to time (t_i)=v (whereas v−q is understood to be an arbitrary period corresponding to the time between detecting the communication failure and detecting the communications recovery) the integrated node can detect the communication recovery in the communications link **520***v* and transmits the notice **560***qv* of the recovery to the remote host computer **510**, including the time and date of the communications failure and communications recovery. Alternatively, the remote host computer **510** can detect the communications failure at time (t_i)=q and the communications recovery at time (t_i)=v, assuming that each of the remote host commuter **510** and the integrated node **500** are time-synchronized as is described herein with respect to FIG. **3**. At time (t_i)=v, the integrated node can also extract time-stamped process data **540***v* from the archived data file **354**, responsive to the request **520***v* from the remote host computer **510** and can transmit **550***p* the extracted time-stamped process data **540***v* to the remote host computer **510**. Upon receiving notice **560***qv* from the integrated node **500**, or upon detecting the communications failure and the communications recovery, the remote host computer **510** can issue command **570***qv*, to the integrated node **500**, to restore data corresponding to the period (v−q) for the communications failure and the communications recovery. Upon receiving command **570***qv*, the integrated node **500** can responsively extract **530** the process data **580***qv* from a data file **354**, the process data **580***qv* being responsive to the period (v−q) and the corresponding communications failure, and can further transmit **590***qv* the extracted process data **580***qv* to the remote host computer **510**. If the transmission **590***qv* interferes with transmissions **550***p* or any transmission at time (t_i)=n, **550***n*, the remote host can buffer data transmissions **590***qv* and **550***n* to the remote host computer **510**, accordingly, to thereby regulate communications traffic being transmitted to a remote host computer **510** responsive to collected data volume, communication link failure, and bandwidth limitation, as will be understood by those having skill in the art. Furthermore, the remote host computer **510** can initiate a copy of the file pertaining to the time of failure while continuously capturing real-time data.

Even further, as can be shown in FIG. **1**A, embodiments of the present invention can include at the integrated node **100**, for example, a data validation and reconciler (DVRM) **164**, which can be computer program or computer program product to perform validation and reconciliation of data collected from the plurality of remote subsystems **120**. The DVRM **164** enhances the accuracy of data acquired by the integrated node **100**, which also enhances the effectiveness of the integrated node **100** in controlling the plurality of remote subsystems **120**. Those having skill in the art will appreciate that data validation functions and data reconciliation functions can be incorporated into one computer program product or module, such as the DVRM **164**, or can be incorporated into one or more modules, such as a data validation module (DVM) **165** as can be shown in FIG. **6**, a data reconciler (DRM) **166** as can be shown in FIG. **7**, or any other related modules or submodules, such as a reporting module **167**, for example. Exemplary embodiments are described herein with respect to a DVM **165**, a DRM **166**, and a reporting module **167**, but those having skill in the art will appreciate that any described function of the DVM **165**, DRM **166**, or reporting module **167** can also be a function the DVRM **164**, and such is within the scope of the disclosure.

As can be shown with reference to FIG. **2**D, FIG. **6**, and FIG. **7**, the DVM **165** can receive as input **601** the data acquired from any of the plurality of remote subsystems **120** to perform data validation functions as described further herein and, further, to output verified measurement data to the DRM **166** or to other components or modules, whether internal or external to the integrated node **100** (e.g., for storing data or outputting data to a remote host). Further, the DRM **166** can receive input **701** of the verified measurement data output from the DRM **166** or any measurement data collected from any of the plurality of remote subsystems **120** to perform data reconciliation functions as described further herein and to output measurement data to other components or modules, whether internal or external to the integrated node (e.g., data storage, data output to a remote host). As can be shown with reference to FIG. **2**, the data input to the DVM **165**, DRM **166**, or DVRM **164** can be first acquired and converted using the data acquirer **161** and the protocol translator or translation

server **102**. Additionally, as an intermediate step, as can be shown with reference to FIG. **2**D, any process data or measurement data can be stored at, or accessed from, the database server **101**.

The DVM **165** can include or provide measurement bounding, which can be shown with reference to FIG. **6**. In such embodiments, the DVM **165** can process raw measurement data using filtering procedures **607** being known to those having skill in the art to identify measurements that are outside of preselected bounds **608**. For example, a computer program product **1100**, as can be shown with reference to FIG. **11**, can include one or more instructions to compare **1101** measurements in time-stamped data to pre-defined bounds to determine if a measurement is an out-of-bounds measurement. Data filtering procedures can, for example, remove and replace certain readings (e.g., unrealistic or incorrect readings) and measurements that are out of bounds, for example, according to instruction **1106**, which thereby enhances downstream use of the filtered measurements in later calculations, i.e., enhancing convergence results in a reconciliation performed by the DRM **166**. The preselected bounds **608** can be stored, for example, in memory **160** or at the database **101** and can include at least one level of bounds (an upper and a lower) for each measurement, as will be understood by those having skill in the art. Data filtering procedures can be implemented to detect values outside of the preselected bounds and, responsively, to replace the filtered value **610** with an alternate value **609**. The alternate value can be, for example, a default value, a minimal or maximal value of a preselected interval of past measurements, a last good measurement (i.e., a validated and not filtered measurement), an average of the preselected bounds, an average of a preselected number of measurements or interval of past measurements, the upper bound, the lower bound, or any preselected absolute or relative value. Data filtering procedures can also, responsive to detecting measurement data outside of the preselected bounds, for example, command **612** the plurality of remote subsystems **120** or the data acquirer **161** to deactivate or suspend measurement or data acquisition functions, for example, according to instruction **1107**.

The DVM **165** can also include or provide, for example, adaptive accuracy functionality **604**. In such embodiments, the DVM **165** can adjust the data filtering bounds responsive to a predefined accuracy configuration for the measurements **605**. The accuracy configuration can include user-configurable confidence factors **606** assigned to certain measurements that are likely to affect reconciliation, as is described further herein. Accuracy confidence factors can also be programmatically assigned responsive to certain different measurement types.

The DVM **165** can also include or provide, for example, flow compensation functionality, as will be understood by those having skill in the art. In such embodiments, the DVM **165** can determine whether flow readings are compensated **602** and perform the compensation **603**, unless compensated flow measurements have been provided directly from the data source, i.e., one or more of the plurality of remote subsystems **120**.

Turning to the data reconciler (DRM) **166**, as can be shown in FIG. **2**D and FIG. **7**, the DRM **166** can receive as an input **701** the measurement data verified by the data validation module (DVM) **165**, i.e., validated measurement data, which can be validated, for example, according to instruction **1102** as can be shown with reference to FIG. **11**. In other words, the combination of data bounds and accuracy functionality "drive" the data reconciliation process and enhance the accuracy factors thereof, as is described further herein. Such functionality in DRM **166** can be provided for measurement data, such as measurement data for flow, pressure, temperature, and density that is normally distributed.

The DRM **166** can further include or provide pre-defined reconciliation models **703**, **704**. The pre-defined reconciliation models can be stored as will be known to those having skill in the art, for example, in the memory **160** or in the database **101**. The pre-defined reconciliation models may be defined, for example, for a specific process or unit (a "unit model") or for the entire plant (a "plant-wide model"); and each pre-defined reconciliation model can include, for example, a different set of standard procedures or rules to be implemented for the reconciliation of measurement data for the unit or plant. A plant-wide model may be include or may depend on one or more unit models. Pre-defined reconciliation models can also be tailored to an operating state of the unit or plant **709**. For example, computer program product **1100**, as can be shown with reference to FIG. **11**, can include one or more instructions to determine **1103** an operating state, responsive to the verified measurement data, for one or more process units having one or more remote time-synchronized subsystems. As is described further herein, the pre-defined reconciliation models can be user-configurable through a configuration interface accessible to a user, for example, through a user terminal having an input device and a display device. The computer program product **1100** can further include one or more instructions to determine **1104** an a reconciliation model responsive to the verified measurements and the operating state and to reconcile **1105** the verified measurements, as is described in further detail in the following paragraphs.

The DRM **166** can further include or provide, for example, a configuration interface, such as the local interface **190**. The configuration interface **190** can, for example, include an object-oriented graphical user interface ("GUI") having a built-in library of objects required to develop unit models and plant-wide models. As will be understood in the art, the configuration interface **190** may be implemented on a user-terminal computer and be configurable or operable by any number of peripheral devices for interacting with a user, such as a monitor, a keyboard, a mouse, a stylus, a printer, a touch-screen, a joystick, or any other known peripheral device in communication with the user-terminal computer. Modeling objects included at the configuration interface include, for example, objects to identify routing and process streams between plants and different numbers and types of process units, such as tanks, crude switches, and other process units that will be known to those having skill in the art. The configuration interface can also, for example, allow a user to assign to a model various types of data, including reconciled readings, key performance indicators (KPIs), confidence/accuracy factors, and unreconciled data (real-time and historical).

The DRM **166** can also provide or include, for example, state detection logic. In such embodiments, state detection algorithms can be used to process measurement data to detect an operational state of a unit or plant **705**. For example, the DRM **166** can responsively detect steady state operations, or changes thereto, of remote subsystems **120** generating input for the unit or plant being reconciled. In addition the DRM can change **708** an implemented reconciliation model to a different reconciliation model for a different operational state responsive to detecting an operational event which changes the operational state **706**, **707**.

In further detail, a unit model **703** can be defined for a unit of related processes, for example, if minimum redundancy is to be achieved. Each unit model can correspond, for example,

to one or more of the plurality of remote subsystems **120** and can reflect the operation logic of the unit and define unit production-balancing calculations based on open and closed transactions and unit input/output with respect to other process units and their corresponding process streams. Units to be modeled can include, for example: crude distillation unit, utilities, H2, vacuum distillation unit, fluid catalytic cracking, hydrocracker, crude stabilization facility, gas treating unit, gas condensation unit, natural gas liquid, platformer, and viscosity breaker ("vis-breaker").

A plant-wide model **704**, for example, can be configured for any group of units and can define a mass balancing loop for the plant based on crude switches, operation scenarios, and open and closed transactions (for example, when there is a change in the level status of tanks or the operation of pumps). The plant-wide model can, for example, reflect balancing calculations for inputs, outputs, and inventories of receipts, charges, processing, intermediate products, and final products. The plant-wide model can further reflect pre-defined allocation schemes to perform mass balancing based on the feed, charge, and products specifications. Further, the plant-wide model can reflect balancing calculations and methods for a user-initiated allocation of tanks, for example, when a service change occurs.

The DRM **166** can, for example, include predefined rules and conditions **712** to determine a minimum required redundancy level for a specific model to thereby enhance model convergence and confidence levels for the model. Such conditions can include, for example, switching a pump off if the flow is below certain limit or activating some bounds or streams based on some readings/conditions. In certain embodiments, a user can configure rules and conditions for redundancy using the configuration interface **190** as described herein. Accordingly, reconciliation of plant-wide models including such redundancies can overcome measurement inaccuracies or missing data.

The DRM **166** can further incorporate data libraries **711** as would be necessary to support reconciliation and other calculations in connection with the unit and plant-wide reconciliation models. The libraries, for example, can be stored according to techniques known to those having skill in the art, such as in the memory **160** or in the database **101**. Libraries can include, without limitation, the following information:

a) Standard Volume Calculations: for methods according to the American Petroleum Institute's standard volume calculations, such as calculations to convert volumetric flow to mass flow and to convert mass flow to volumetric flow.

b) Thermodynamics Libraries: for properties relating to pure compounds and pseudo-compounds for crude assays, such as true boiling points (TBP) for production and relevant thermodynamic properties for vapor-liquid equilibrium and methods representing other known processes in the oil refining and gas processing industry. Defined process data may include, for example, temperature, pressure, liquid or gas chromatography (an analysis performed in the laboratory), density, ASTM (American Standards for Testing Materials) D86, and TBPs.

c) Mass and Heat Balance Optimization Calculations: for methods of combining mass, heat, and component balances with thermodynamic equilibrium information to form a single optimization problem. Major balances include, for example, the following: mass, volume, heat (energy), and component balancing. Thermodynamic equilibrium data, for example, can enhance redundancies (on separate and simultaneous runs) and increase the accuracy of reconciled measurements.

d) Missing Composition Estimations: for calculating the average mass weight based on component mass balance and the thermodynamic libraries to increase the accuracy of estimating missing compositions.

e) Missing Variable Estimation: for identifying and estimating values of unmeasured process variables and values of missing instruments (if existing redundancies allow).

f) Pressure and Molecular Balance: for utilizing techniques of vapor-liquid equilibrium to calculate pressure and molecular balances.

g) Chemical Reactions: for modeling reactions on the basis of atomic balances or user-defined equations.

h) ASTM D86 (American Standards for Testing Materials): for converting ASTM D86 distillation curves to TBP curves for measurement validation in systems having multiple components.

The DRM **166** can further include or provide a model solver **714** to reconcile models and produce validated and reconciled data consistent with the foregoing functionality. The model solver can incorporate, for example, computer program product having instructions for solving reconciliation problems for the unit models and plant-wide models. Such embodiments can utilize algorithms known to those having skill in the art to solve rigorous reconciliation problems, for example, in less than ten minutes per run, such as sequential quadratic programming (SQP) algorithms (including Sequential Quadratic Programming with Interior Point). The model solver, for example, can perform simultaneous mass and heat balances, incorporate user-defined rules to handle measurement bounds, perform simultaneous mass and volumetric balance, support inequality constraints, and terminate if convergence is not achieved within a preselected number of iterations. In addition, the model solver can implement solver bounding according to preselected bounds for enhancing reconciled measurements. The solver bounds can, for example, function as described with respect to the DVM **165** measurement bounds.

The DRM **166** can further include or provide, for example, computer program product having instructions to detect gross errors in reconciled measurements **715**. Embodiments can determine a confidence level for reconciled values and a probability of gross error existence and, further, can flag **716** values that exceed a preselected confidence level **713**. Preselected confidence levels **713** can be user-configurable; for example, a 95% confidence level can be a suitable default confidence level. In addition, the DRM **166** can utilize standard statistical methods to distribute random errors over measurements based on the confidence level. Also, DRM **166** can incorporate, for example, computer program product having instructions to eliminate gross errors in reconciled measurements. The computer program product having instructions for eliminating gross errors, for example, can provide the capability to remove measurements **717** with detected gross errors according to a preselected priority scheme **718**, which includes: (i) giving the priority to remove measurements with larger magnitude of corrections; or (ii) giving the priority to remove measurements with highest impact on the total sum of reconciliation run penalty.

The DRM **166** can further output **719** the reconciled measurements **722** along with: an indication of the validated accuracy/precision of the reconciled measurement; an indication of major measurements that contribute to the validated accuracy; an identification of measurements improved by the reconciliation; and a quantification of the contribution of the

reconciled measurements to the overall penalty of the reconciliation problem. As will be appreciated by those having skill in the art, the DRM **166** can output any of the measurements or values by storing to a storage medium such as memory **160** or database **101**, by transmitting to remote host computer **110**, or by transmitting to any other computer or interface in communication with the integrated node **100** over the input/output unit, such as the local interface **190** or any computer terminal having a graphical user interface as will be understood by those having skill in the art.

The DRM **166** can further include or provide, for example, computer program product having instructions **720** to estimate key performance indicators ("KPIs") **723** related to any of the following areas: loss identification, oil accounting, and performance monitoring. Other KPIs can include, for example: (i) loss management, i.e., for calculating an amount of losses incurred the unit or plant level; (ii) a reliability index based on the reconciled-to-theoretical yield ratio; (iii) performance-based KPIs, such as those indicating the fouling of heat exchangers; the efficiency of heaters, compressors, pumps, tubes, and fractionation; fractionation overlaps; and a performance index based on the ratio represented by equation [1]:

$$\frac{[1-(\text{RECONCILED\_LOSSES})]}{[1-(\text{UNRECONCILED\_LOSSES})]}. \quad [1]$$

As will be appreciated by those having skill in the art, the DRM **166** can retrieve data defining KPIs **721** from a storage medium such as memory **160** or database **101** in communication with to remote host computer **110** or in communication with any other interface in communication with the integrated node **100** over the input/output unit, such as the local interface **190** or any computer terminal having a graphical user interface, as will be understood by those having skill in the art. The DRM **166** further include or provide computer program product having instructions to calculate the error contributing to, or resulting from, each input measurement used to calculate KPIs. For example, the computer program product can have instructions to calculate statistical interactions between different measurements using covariance analysis, for example, by using covariance analysis to calculate interactions between KPIs or between KPIs and measurements. The computer program product can further have instructions to compute accuracies for each KPI responsive to reconciled measurements and calculated covariances.

The DRM **166** can further provide or include, for example, a reporting module **167**, for example, a computer program product having instructions to deliver any of the reconciled measurements or determined values to another system or a user. As will be appreciated by those having skill in the art, the reporting module **167** can deliver measurements or values by storing such to a storage medium, such as the memory **160** or the database **101**, by transmitting to remote host computer **110**, or by transmitting to any other interface in communication with the integrated node **100** over the input/output unit, such as the local interface **190** or any computer terminal having a graphical user interface as will be understood by those having skill in the art. By way of example, and without limitation, measurements or values that can be delivered according include: quality of reconciled model based on assumptions, redundancies, and measurements; reconciled measurements and accuracies thereof; estimated measurements and the accuracies thereof; KPIs determined from reconciliation model and accuracies thereof; flagged and suspected out-of-bounds measurements and reconciliations; and any measurements or values selected or configured by a user, which can be selected according to a customized report. For example, reporting functionality may incorporate one or more proprietary or standard reporting tools, such as Crystal Reports® or Microsoft® Office Excel (add-in). Reports may be generated, for example, according to yield and loss accounting (i.e., charge/feed balancing); environmental compliance of drainage, tank vaporization, and percentage of unaccountable or accountable losses; performance monitoring; and data/model analysis. Reports may be delivered in native or raw form and in any format known to those having skill in the art, including without limitation, formatted for Microsoft® Office Excel® or Microsoft® Office Word, or Adobe® PDF (portable document format). Reports may be sorted, for example, based on penalty, thereby allowing a user to readily identify where significant corrections have been applied. Reports may also flag certain measurements or values of particular interest, for example, using color coding, to indicate, for example, significant unaccountable losses, faulty or suspected readings, or reconciled measurements.

This application claims priority and is related to U.S. Provisional Patent Application No. 61/367,207 filed Jul. 23, 2010 titled "Machine, Computer Program Products, And Computer-Implemented Methods Providing An Integrated Node For Data Acquisition And Control," which is incorporated by reference in its entirety.

In the drawings and the specification, there have been disclosed a typical preferred embodiment of the invention, and although specific terms are employed in the drawings, specification, the terms are used in a descriptive sense only and not for purposes of limitation. In addition, words related to numbering used in the drawings, specification, and the claims—such as "primary," "secondary," "first," "second," "third" or other ordinal numbers—are merely descriptive and do not define or connote an order, sequence, series, or degree of importance. Furthermore, to the extent that multiple embodiments or multiple features of a particular embodiment are described disjunctively in the drawings or the specification (such as a "computer program or a computer program product") are provided for exemplary purposes and to provide thoroughness in the disclosure and are not intended to imply any difference or an intent to differentiate among the meaning of the words used to describe the multiple embodiments or elements. The invention has been described in considerable detail with specific reference to the illustrated embodiments; it will be apparent, however, that various modifications and changes can be made within the spirit and scope of the invention as described in the foregoing specification and as defined in the appended claims.

That claimed is:

1. A programmable logic controller (PLC) positioned to allow a remote host to interface with a plurality of remote subsystems to thereby define an integrated node, the integrated node comprising:

a central processing unit;

a network interface to route network connections with the remote host and the plurality of remote subsystems;

a protocol translator to translate communications with each of the plurality of remote subsystems according to one of a plurality of process automation communication protocols;

an input/output unit positioned to transfer communications between the integrated node, the plurality of remote subsystems, and the remote host;

a database server module positioned to archive data acquired from the plurality of subsystems in a plurality of time-stamped archive files; and

a non-transitory computer-readable storage medium having stored thereon:

first executable computer program comprising a set of instructions that, when executed by the central processing unit, causes the integrated node to perform the following operations:

synchronizing an internal clock in the remote host and in each of the plurality of remote subsystems to thereby define a plurality of remote time-synchronized subsystems,

acquiring time-stamped process data from each of the plurality of remote time-synchronized subsystems responsive to a first pre-defined rate,

archiving the acquired time-stamped process data responsive to the acquiring operation in a time-stamped archive file,

extracting the archived time-stamped process data from at least one time-stamped archive file responsive to receiving a command from the remote host, and

transmitting the time-stamped process data extracted from the at least one time-stamped archive file, to the remote host responsive to receiving the command from the remote host;

second executable computer program comprising a set of instructions that, when executed by the central processing unit, causes the integrated node to perform the following operations:

detecting a time of a communication failure and a time of a corresponding communication recovery in a communication link between the integrated node and any of the plurality of remote time-synchronized subsystems,

retrieving at least one data file from one of the plurality of remote time-synchronized subsystems responsive to the detected time of the communication failure and the detected time of the corresponding communication recovery,

extracting time-stamped process data from the retrieved at least one data file, the time-stamped process data being extracted starting from the time of the communication failure and ending at the time of the corresponding communication recovery, and

transmitting the time-stamped process data extracted from the retrieved at least one data file to the remote host responsive to the extracting operation; and

third executable computer program comprising a set of instructions that, when executed by the central processing unit, causes the integrated node to perform the following operations:

detecting a time of a communication failure and a time of a corresponding communication recovery in a communication link between the integrated node and the remote host,

extracting portions of the archived time-stamped process data from the at least one time-stamped archive file, the time-stamped process data being extracted starting from the time of the communication failure and ending at the time of the corresponding communication recovery,

transmitting the time-stamped process data extracted from the at least one archived time-stamped archive file, to the remote host responsive to the extracting operation, and

buffering data transmissions in the communication link between the integrated node and the remote host responsive to detecting bandwidth starvation therein.

2. A programmable logic controller as defined in claim **1**,

wherein one of the first computer program, second computer program, and third computer program comprises one or more instructions that, when executed by the central processing unit, causes the integrated node to perform an operation of:

reporting an exception alarm to the remote host so that the remote host receives the alarm and issues commands in response to being processed by the integrated node, the exception alarm being responsive to determining that the acquired time-stamped process data satisfies pre-defined exception criteria;

wherein the acquiring operation is to be performed at a rate of once per second; and

wherein the integrated node operably receives the command from the remote host to extract and operably transmits, at an interval of once every sixty (60) seconds, portions of the acquired time-stamped process data acquired by the acquiring operation during the sixty (60) second time intervals between receiving commands from the remote host.

3. A programmable logic controller as defined in claim **1**,

wherein the remote host is a supervisory control and data acquisition (SCADA) host configured to host process automation functions;

wherein the plurality of remote subsystems includes one or more intelligent field systems selected from the following: permanent down hole monitoring (PDHM) systems, electrical submersible pump (ESP) systems, smart well completion (SWC) systems, and flow meter systems; and

wherein each of the remote host and the plurality of remote subsystems is synchronized responsive to a uniform time according to one or more of the following: the integrated node utilizing telecontrol protocols, and a global positioning system (GPS) time server utilizing simple network time protocol (SNTP).

4. A programmable logic controller as defined in claim **1**,

wherein the input/output unit is positioned to support each of analog inputs, analog outputs, digital inputs, digital outputs, and pulse inputs;

wherein the protocol translator is adapted to support one or more of the following communication protocols: serial Modbus, Modbus over Internet protocol (IP), highway addressable remote transducer protocol (HART), distributed network protocol (DNP), IEC61850 (International Electrotechnical Commission Standard), the International Society of Automation (ISA) SP100 protocol, and Ethernet/IP (Industrial Protocol); and

wherein the integrated node is configurable to support a plurality of connection types, protocol types, and communication speed rates.

5. A programmable logic controller as defined in claim **1**,

wherein the archiving operation includes archiving the time-stamped process data in a plurality of comma-separated values (CSV) files, each of the files corresponding to a particular day and being named responsive to a date, month, and year of the day and being stored in a directory, the directory being named responsive to a month and year;

wherein the archiving operation includes performing the archiving operation continuously responsive to continuous performance of the acquiring operation; and

wherein the transmitting operation includes transmitting data using file transfer protocol (FTP) from an FTP server, the FTP server being one of the integrated node and the remote host.

6. A programmable logic controller having a central processing unit and a non-transitory computer-readable storage medium to allow a remote host to interface with a plurality of remote subsystems to thereby define an integrated node, the integrated node comprising:

an input/output unit configured to transfer communications between the node the plurality of remote subsystems and the remote host;

a database server module configured to archive data acquired from the plurality of subsystems in a plurality of time-stamped archive files;

a time-synchronizer configured to synchronize an internal clock in each of the plurality of remote subsystems to thereby define a plurality of remote time-synchronized subsystems;

a data acquirer configured to periodically acquire time-stamped process data from each of the plurality of remote time-synchronized subsystems and archive the acquired time-stamped process data using the database server module;

an exception reporter configured to determine exceptions in the acquired time-stamped process data acquired from the plurality of remote time-synchronized subsystems and report the exceptions to the remote host;

a data uploader configured to periodically upload the archived time-stamped process data to the remote host;

a subsystems restorer configured to retrieve time-stamped data from any of the plurality of remote time-synchronized subsystems responsive to communications failure between the integrated node and any of the plurality of remote time-synchronized subsystems, the subsystems restorer comprising a computer program being stored on the non-transitory computer-readable storage medium and operable on the central processing unit, the computer program comprising a set of instructions that, when executed by the central processing unit, causes the integrated node to perform the following operations:

detecting a time of a communication failure and a time of a corresponding communication recovery in a communication link between the integrated node and any of the plurality of remote time-synchronized subsystems,

retrieving at least one data file from one of the plurality of remote time-synchronized subsystems responsive to the detected time of the communication failure and the detected time of the corresponding communication recovery,

extracting time-stamped process data from and contained within the retrieved at least one data file, the time-stamped process data being extracted starting from the time of the communication failure and ending at the time of the corresponding communication recovery, and

transmitting the time-stamped process data extracted from the retrieved at least one data file, to the remote host responsive to the extracting operation; and

a host restorer being a computer program being stored on the non-transitory computer-readable storage medium and operable on the central processing unit, the computer program comprising a set of instructions that, when executed by the central processing unit, causes the integrated node to perform the following operations:

detecting a time of a communication failure and a time of a corresponding communication recovery in a communication link between the integrated node and the remote host,

extracting portions of the archived time-stamped process data from and contained within one or more of the at least one time-stamped archive files, the time-stamped process data being extracted starting from the time of the communication failure and ending at the time of the corresponding communication recovery, and

transmitting the extracted portions of the archived time-stamped process data extracted from the one or more of the at least one time-stamped archive files, to the remote host responsive to the extracting operation.

7. A programmable logic controller as defined in claim 6, wherein the time synchronizer comprises a computer program being stored on the non-transitory computer-readable storage medium and operable on the central processing unit, the computer program comprising a set of instructions that, when executed by the central processing unit, causes the integrated node to perform the following operation: synchronizing an internal clock in the remote host and in each of the plurality of remote subsystems to thereby define a plurality of remote time-synchronized subsystems.

8. A programmable logic controller as defined in claim 7, wherein the data acquirer comprises a computer program being stored on the non-transitory computer-readable storage medium and operable on the central processing unit, the computer program comprising a set of instructions that, when executed by the central processing unit, causes the integrated node to perform the following operations:

acquiring the time-stamped process data from the each of the plurality of remote time-synchronized subsystems at a first pre-defined rate; and

archiving the acquired time-stamped process data in a time-stamped archive file, responsive to the operation of acquiring the time-stamped process data from the each of the plurality of remote time-synchronized subsystems at the first pre-defined rate.

9. A programmable logic controller as defined in claim 8, wherein the exception reporter comprises a computer program being stored on the non-transitory computer-readable storage medium and operable on the central processing unit, the computer program comprising a set of instructions that, when executed by the central processing unit, causes the integrated node to perform the following operations:

comparing the acquired time-stamped process data to pre-defined exception criteria responsive to the acquiring operation to determine whether the time-stamped process data satisfies the pre-defined exception criteria; and

reporting an exception alarm to the remote host so that the remote host receives the alarm and issues commands in response to be processed by the integrated node, the exception alarm being responsive to determining that the acquired time-stamped process data satisfies pre-defined exception criteria.

10. A programmable logic controller as defined in claim 9, wherein the data uploader comprises a computer program being stored on the non-transitory computer-readable storage medium and operable on the central processing unit, the computer program comprising a set of instructions that, when executed by the central processing unit, causes the integrated node to perform the following operations:

extracting archived time-stamped process data from and contained within the at least one time-stamped archive file responsive to receiving a command from the remote host; and

transmitting the time stamped process data extracted from the at least one time-stamped archive file to the remote host responsive to receiving the command from the remote host.

11. A programmable logic controller as defined in claim 10,

wherein the operation of acquiring the time-stamped process data from the each of the plurality of remote time-synchronized subsystems at the first pre-defined rate occurs at a rate of one time per second; and

wherein the integrated node receives the command from the remote host to extract and transmit, at an interval of once every sixty (60) seconds, portions of the acquired time-stamped process data acquired by the node from one or more of the plurality of remote time-synchronized subsystems during the sixty (60) second time period between commands.

12. A programmable logic controller as defined in claim **11**,

wherein the time synchronizer further synchronizes an internal clock in the remote host; and

wherein the host restorer is adapted to further cause the integrated node to perform the following operation:

buffering data transmissions in the communication link between the integrated node and the remote host responsive to detecting bandwidth starvation therein.

13. A programmable logic controller as defined in claim **6**,

wherein the remote host is a supervisory control and data acquisition (SCADA) host;

wherein the plurality of remote subsystems includes one or more intelligent field systems selected from the following: permanent down hole monitoring (PDHM) systems, electrical submersible pump (ESP) systems, smart well completion (SWC) systems, and flow meter systems; and

wherein each of the remote host and the plurality of remote subsystems is synchronized responsive to a uniform time according to one of the following: the integrated node utilizing telecontrol protocols, and a global positioning system (GPS) time server utilizing simple network time protocol (SNTP).

14. A programmable logic controller as defined in claim **6**,

wherein the archiving operation includes archiving the time-stamped process data in a plurality of comma-separated values (CSV) files, each of the files corresponding to a particular day and being named responsive to the date, month, and year of the day and being stored in a directory, the directory being named responsive to the month and year;

wherein the archiving step includes being performed continuously in response to the acquiring operation; and

wherein the transmitting step includes transmitting data using file transfer protocol (FTP), the FTP server being either of the integrated node or the remote host.

15. A computer-implemented method for providing a uniform restoration of interrupted data transmissions between a plurality of remote subsystems and a programmable logic controller positioned to allow a remote host computer to interface with the plurality of remote subsystems, the programmable logic controller thereby defining an integrated node, the method comprising the steps of:

detecting a time of a communication failure and a time of a corresponding communication recovery in a communications link between the integrated node and any of the plurality of remote subsystems, each of the integrated node and the plurality of remote subsystems being time-synchronized according to a uniform time source;

retrieving at least one data file from one of the plurality of remote time-synchronized subsystems responsive to the detected time of the communication failure and the detected time of the corresponding communication recovery;

extracting time-stamped process data from the at least one data file responsive to the retrieving step, the time-stamped process data being data starting from the time of communication failure and ending at the time of the communication recovery;

restoring the time-stamped process data to the remote host computer responsive to the steps of retrieving the at least one data file and extracting the time-stamped process data from the at least one data file;

detecting a time of a communication failure and a time of a corresponding communication recovery in a communication link between the integrated node and the remote host computer;

extracting time-stamped process data from at least one time-stamped archive file, the time-stamped process data being data starting from the time of the communication failure and ending at the time of the corresponding communication recovery; and

transmitting the time-stamped process data, extracted from the at least one time-stamped archive file, to the remote host computer responsive to the step of extracting of the time-stamped process data from the at least one time-stamped archive file.

16. The computer-implemented method as defined in claim **15**, wherein the step of restoring includes the step of:

transmitting the extracted process data, extracted from the at least one data file, to the remote host computer responsive to the extracting of the respective time-stamped process data from the at least one data file.

17. The computer-implemented method as defined in claim **16**, wherein the steps of extracting of the time-stamped process data from the at least one data file and transmitting are performed responsive to receiving a command from the remote host computer, the computer-implemented method further comprising the steps of:

reporting the time of the communication failure and the time of the communication recovery to the remote host computer so that the remote host computer issues a command to extract from and transmit portions of the time-stamped process data contained within the at least one data file; and

monitoring to detect for bandwidth starvation in the communication link between the node and the remote host computer responsive to the transmission of the recovery data and buffering data transmissions responsive thereto.

18. A computer-implemented method for providing a uniform restoration of interrupted data transmissions between a remote host and a programmable logic controller acquiring process data from a plurality of remote subsystems, the programmable logic controller thereby defining an integrated node, the computer-implemented method comprising the steps of:

detecting a time of a communication failure and a time of a corresponding communication recovery in a communication link between the integrated node and any of the plurality of remote time-synchronized subsystems;

extracting time-stamped process data from and contained within at least one data file retrieved from one of the plurality of remote time-synchronized subsystems, the time-stamped process data being for a time block starting from the time of the communication failure in the communication link between the integrated node and any of the plurality of remote time-synchronized subsystems and ending at the time of the corresponding communication recovery;

transmitting the time-stamped process data extracted from the retrieved at least one data file, to the remote host responsive to the extracting of the time-stamped process data from at least one data file;

detecting a time of a communication failure and a time of a corresponding communication recovery in a communications link between the integrated node and the remote host, each of the integrated node and the remote host being time-synchronized according to a uniform time source;

extracting time-stamped process data from at least one stored data file, the time-stamped process data being for a time block starting from the time of the communication failure in the communication link between the integrated node in the remote host and ending at the time of the corresponding communication recovery; and

restoring the time-stamped process data extracted from the at least one stored data file to the remote host responsive to the time of the communication failure and the time of the corresponding communication recovery in the communications link between the integrated node and the remote host.

19. The computer-implemented method as defined in claim **18**, wherein the step of restoring includes the step of:

transmitting the extracted process data extracted from at least one stored data file, to the remote host responsive to the extracting of time-stamped process data from the at least one time-stamped archive file.

20. The computer-implemented method as defined in claim **19**, wherein the restoring step is performed responsive to receiving a command from the remote host, and the computer-implemented method further comprises the steps of:

reporting the time of the communication failure and the time of the communication recovery to the remote host so that the remote host issues a command to initiate a restoration of process data not received in the time period between the communication failure and corresponding communication recovery;

monitoring to detect for bandwidth starvation in the communication link between the node and the remote host responsive to transmission of recovery data; and

buffering data transmissions responsive to the transmission of recovery data.

* * * * *