US006704603B1

(12) **United States Patent**
Gesotti

(10) **Patent No.: US 6,704,603 B1**
(45) **Date of Patent: Mar. 9, 2004**

(54) **ADAPTIVE STIMULATOR FOR RELIEF OF SYMPTOMS OF NEUROLOGICAL DISORDERS**

(75) Inventor: **Phil E. Gesotti**, Manassas, VA (US)

(73) Assignee: **Lockheed Martin Corporation**, Bethesda, MD (US)

(*) Notice: Subject to any disclaimer, the term of this patent is extended or adjusted under 35 U.S.C. 154(b) by 0 days.

(21) Appl. No.: **09/659,351**

(22) Filed: **Sep. 12, 2000**

Related U.S. Application Data

(60) Provisional application No. 60/204,404, filed on May 16, 2000.

(51) **Int. Cl.**[7] **A61N 1/08**
(52) **U.S. Cl.** **607/62**
(58) **Field of Search** 607/45, 46, 62, 607/48, 49, 58; 128/905; 600/595, 546

(56) **References Cited**

U.S. PATENT DOCUMENTS

4,165,750 A		8/1979	Aleev et al.	
4,340,063 A		7/1982	Maurer	
4,580,339 A		4/1986	Ioffe	
4,669,480 A		6/1987	Hoffman	
4,697,808 A		10/1987	Larson et al.	
4,754,759 A		7/1988	Allocca	
4,759,368 A		7/1988	Spanton et al.	
4,769,881 A		9/1988	Pedigo et al.	
4,917,092 A		4/1990	Todd et al.	
4,922,908 A		5/1990	Morawetz et al.	
4,989,605 A		2/1991	Rossen	
5,038,797 A		8/1991	Batters	
5,121,747 A		6/1992	Andrews	
5,184,617 A		2/1993	Harris et al.	
5,330,515 A		7/1994	Rutecki et al.	
5,330,527 A		7/1994	Montecalvo et al.	
5,350,414 A		9/1994	Kolen	
5,562,707 A	*	10/1996	Prochazka et al.	607/2
5,597,309 A		1/1997	Riess	
5,814,093 A		9/1998	Stein	
5,895,416 A		4/1999	Barreras, Sr. et al.	
5,961,542 A		10/1999	Agarwala	
5,964,789 A		10/1999	Karsdon	
6,016,449 A		1/2000	Fischell et al.	
6,044,303 A		3/2000	Agarwala et al.	
6,083,156 A		7/2000	Lisiecki	
6,094,598 A		7/2000	Elsberry et al.	
6,246,912 B1		6/2001	Sluijter et al.	
6,356,784 B1	*	3/2002	Lozano et al.	604/22

FOREIGN PATENT DOCUMENTS

EP	0 911 061 A2	4/1999
WO	WO 90/12293	10/1990
WO	WO 97/39795	10/1997
WO	WO 97/39796	10/1997

OTHER PUBLICATIONS

Choi et al. "Selectivity of Multiple–Contact Nerve Cuff Electrodes: A Simulation Analysis," *IEEE Transactions of Biomedical Engineering*, vol. 48, No. 2, pp. 165–172 (Feb., 2001).

Popovic et al. "Surface–Stimulation Technology for Grasping and Walking Neuroprostheses," *IEEE Engineering in Medicine and Biology* pp. 82–93 (Jan./Feb., 2001).

Riess et al. "Augmented Reality and Parkinson's Disease," (2 pgs.) http://ftp.hitl.washington.edu/publications/r–99–5/ (Jan. 22, 2002).

* cited by examiner

Primary Examiner—George R. Evanisko
(74) *Attorney, Agent, or Firm*—Fogg and Associates, LLC

(57) **ABSTRACT**

An adaptive stimulator that aids in the relief of the symptoms of neurological disorders is provided. The adaptive stimulator is adapted to selectively provide stimulation in response to a control unit. The stimulator includes at least one stimulation electrode coupled to an output of the control unit. The at least one stimulation electrode is adapted to provide stimulation to an area of the body of a living subject. The adaptive stimulator includes at least one sensor coupled to the control unit and adapted to be disposed external to the body. The at least one sensor is adapted to respond to physical stimulus and provide input to the control unit.

23 Claims, 10 Drawing Sheets

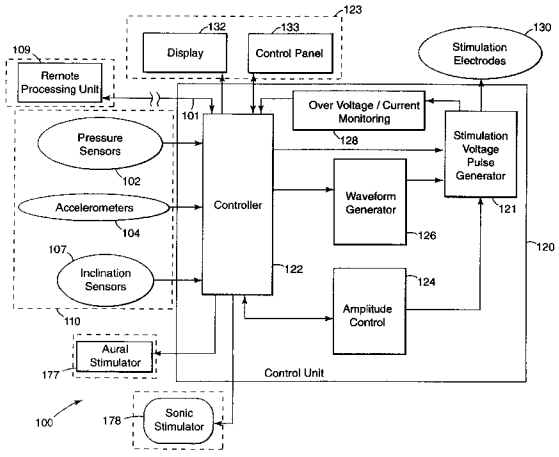

Cala Health Ex. 1008
Cala v. EMKinetics
USP 11,628,300

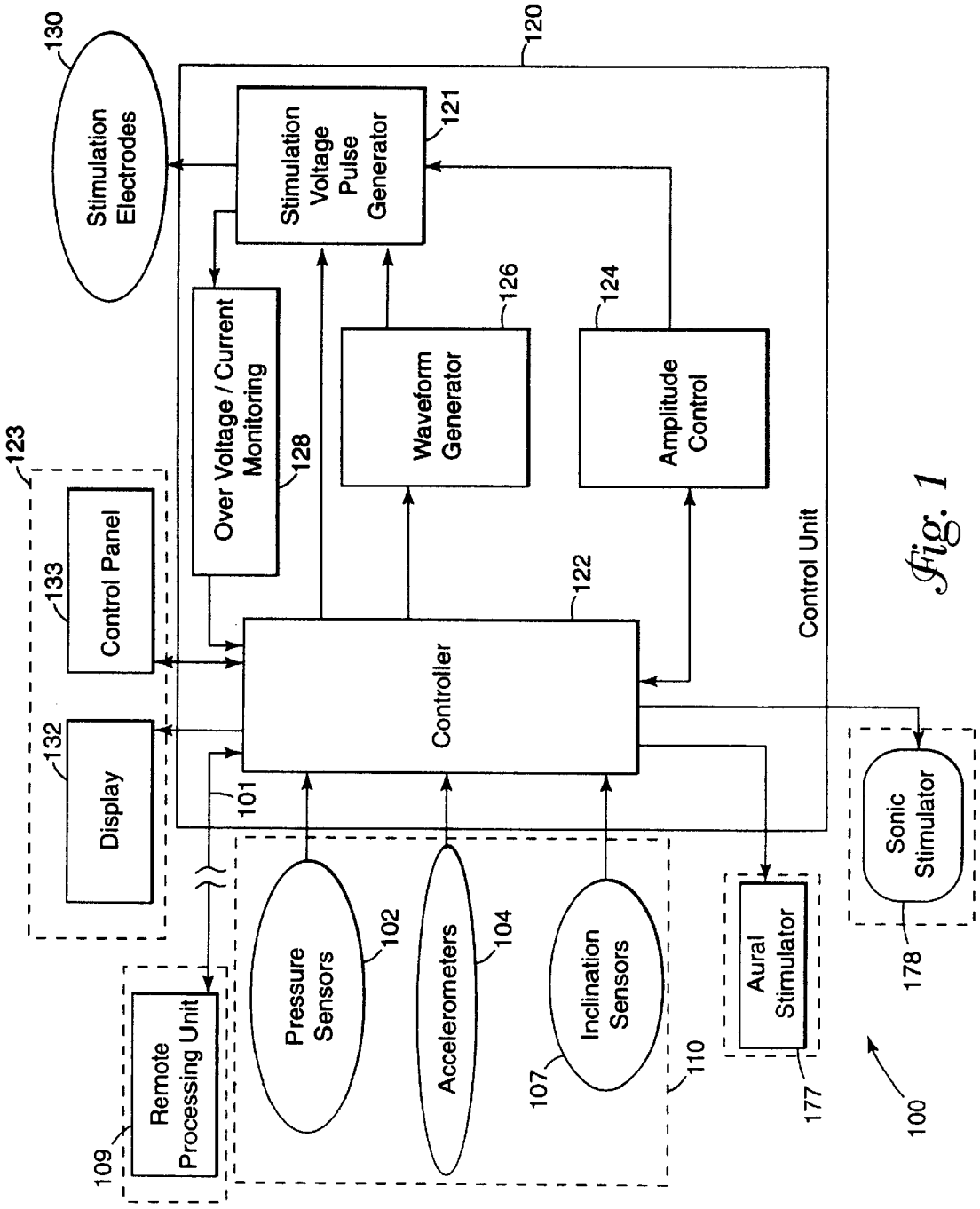
Stimulation Electrodes
130
Stimulation Voltage Pulse Generator
121
120
Over Voltage / Current Monitoring
128
Waveform Generator
126
Amplitude Control
124
123
Control Panel
133
Display
132
Controller
122
Control Unit
101
Remote Processing Unit
109
Pressure Sensors
102
Accelerometers
104
Inclination Sensors
107
110
Aural Stimulator
177
Sonic Stimulator
178
100

Fig. 1

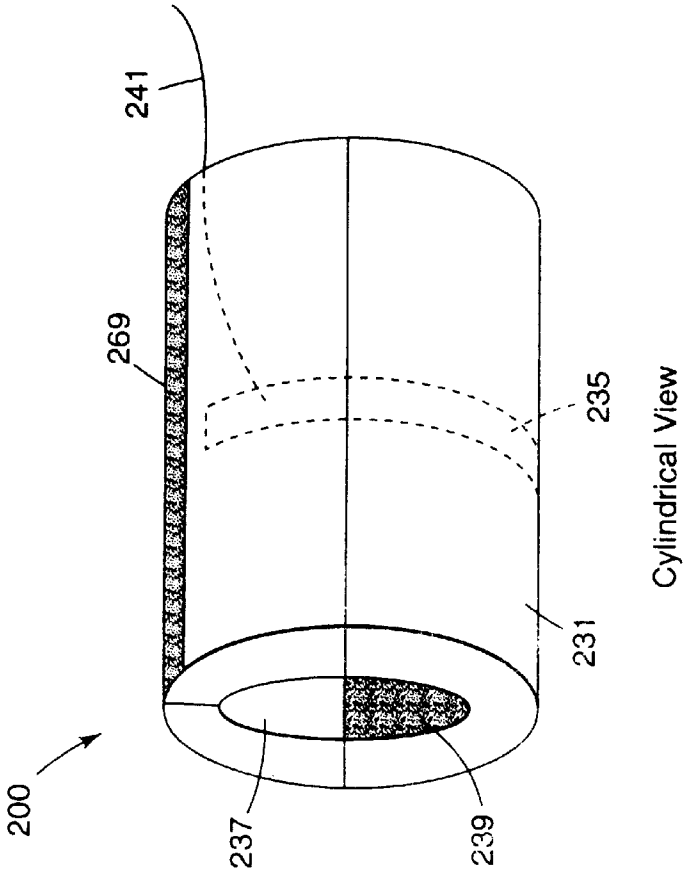
200
237
239
269
241
231
235
Cylindrical View

Fig. 2

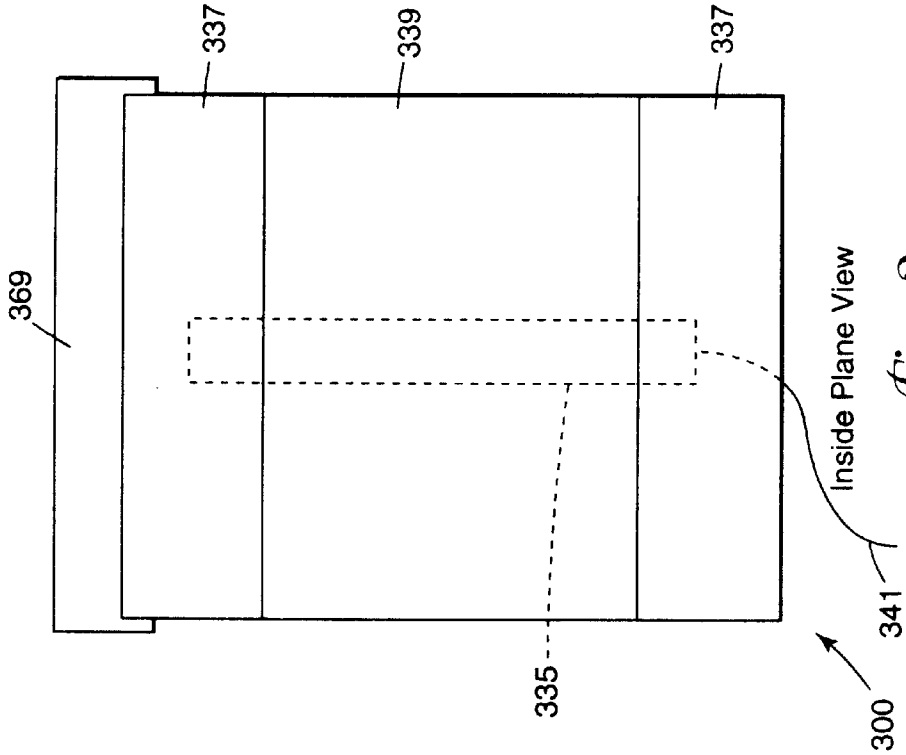
369
337
339
337
335
300
341
Inside Plane View

Fig. 3

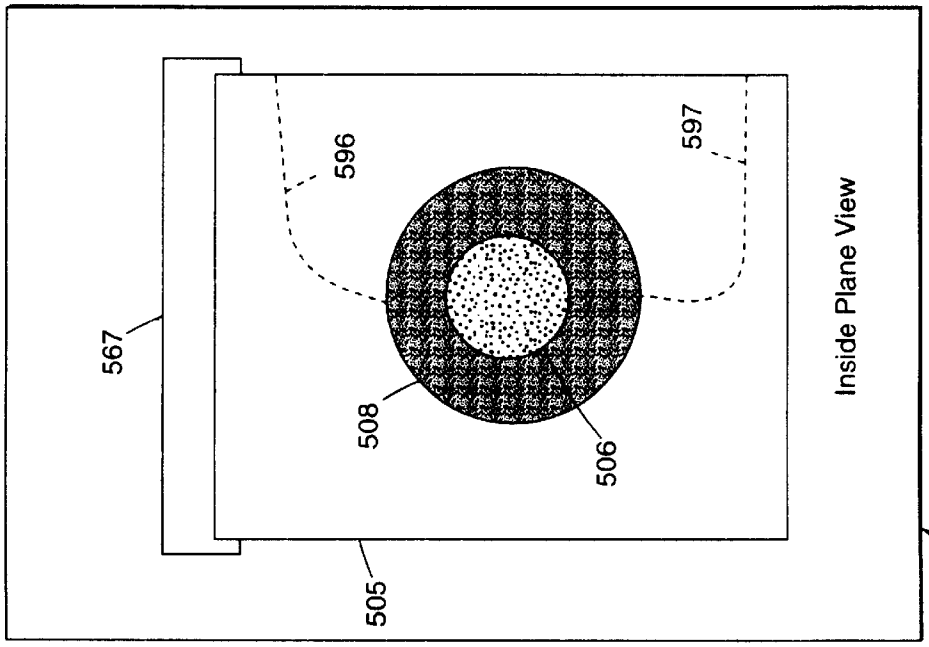
567
596
597
508
506
505
Inside Plane View
500

Fig. 5

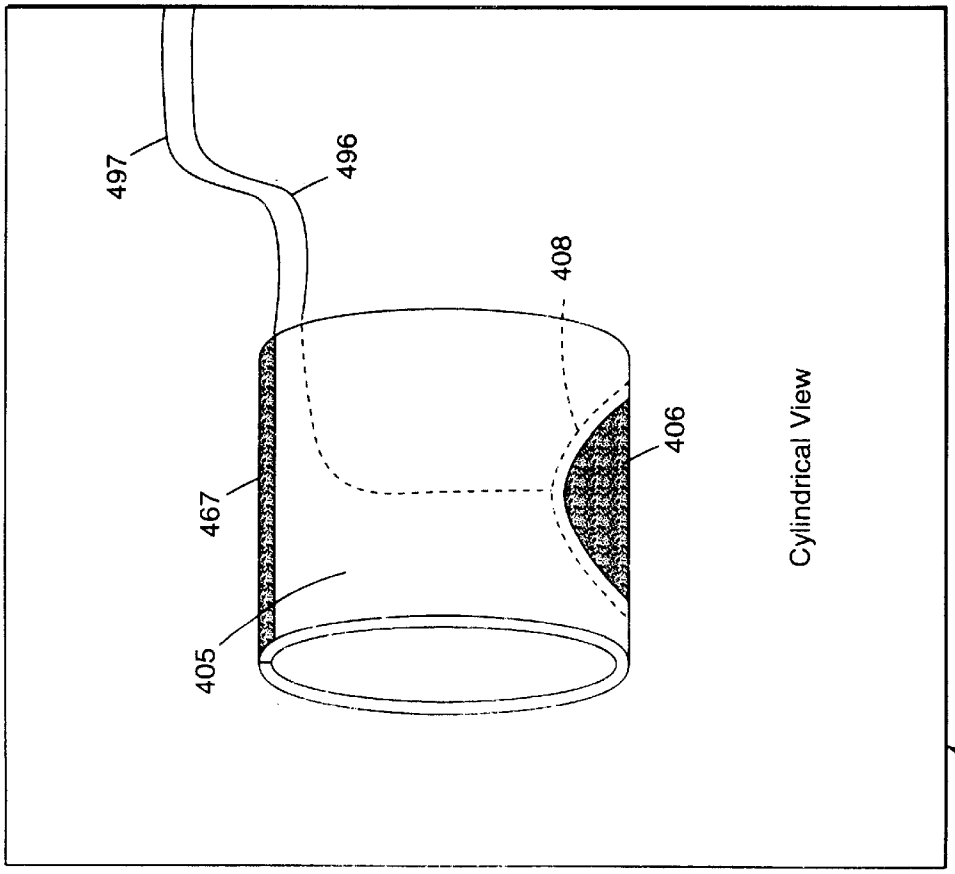
497
496
408
467
406
405
Cylindrical View
400

Fig. 4

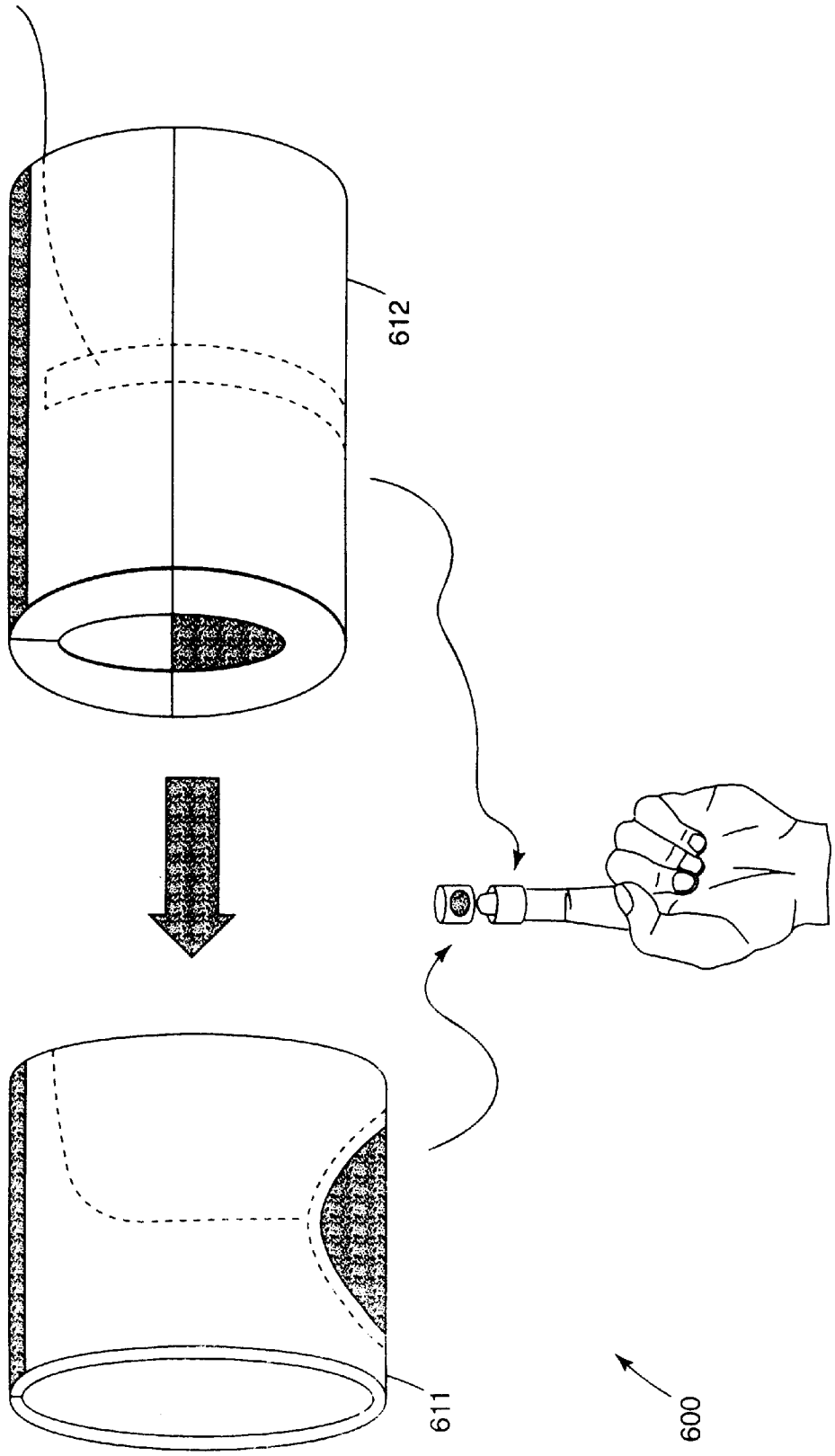

Fig. 6

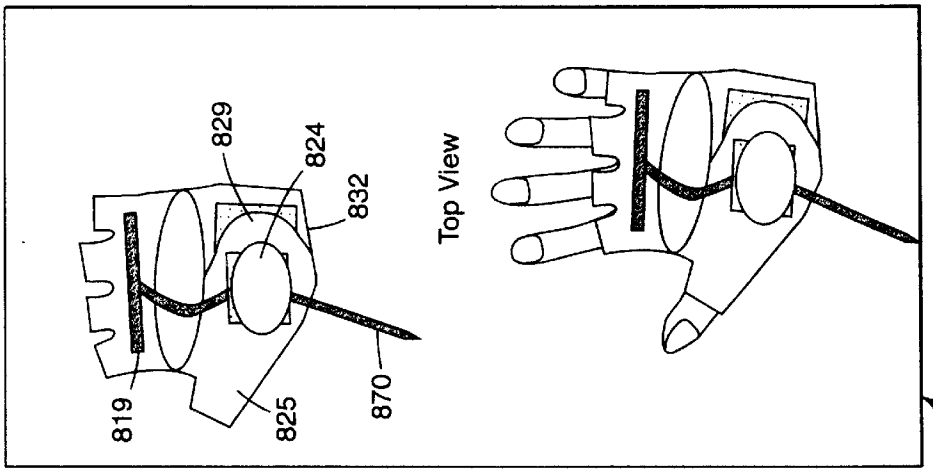
829
824
832
819
825
870
Top View
800

Fig. 8

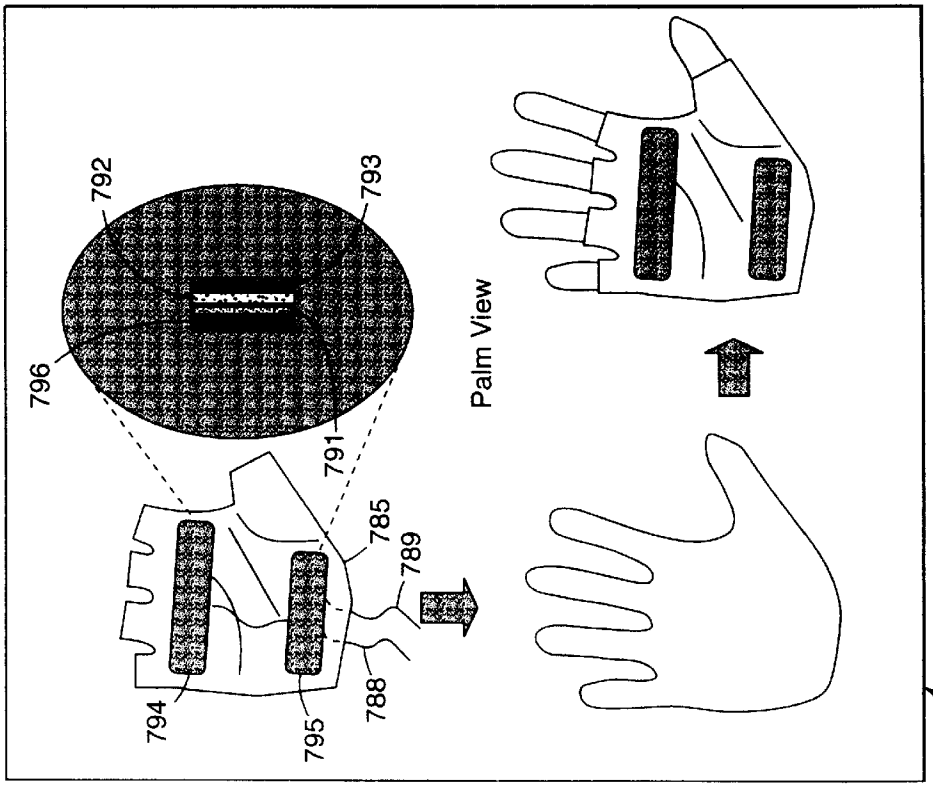
792
793
796
791
785
789
794
795
788
Palm View
700

Fig. 7

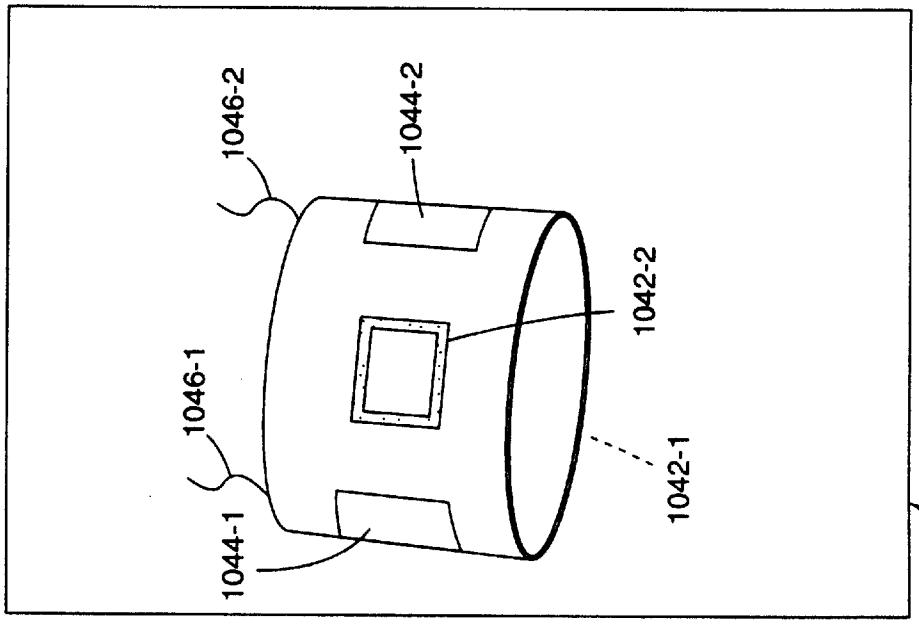
1046-2
1044-2
1046-1
1042-2
1044-1
1042-1
1000

Fig. 10

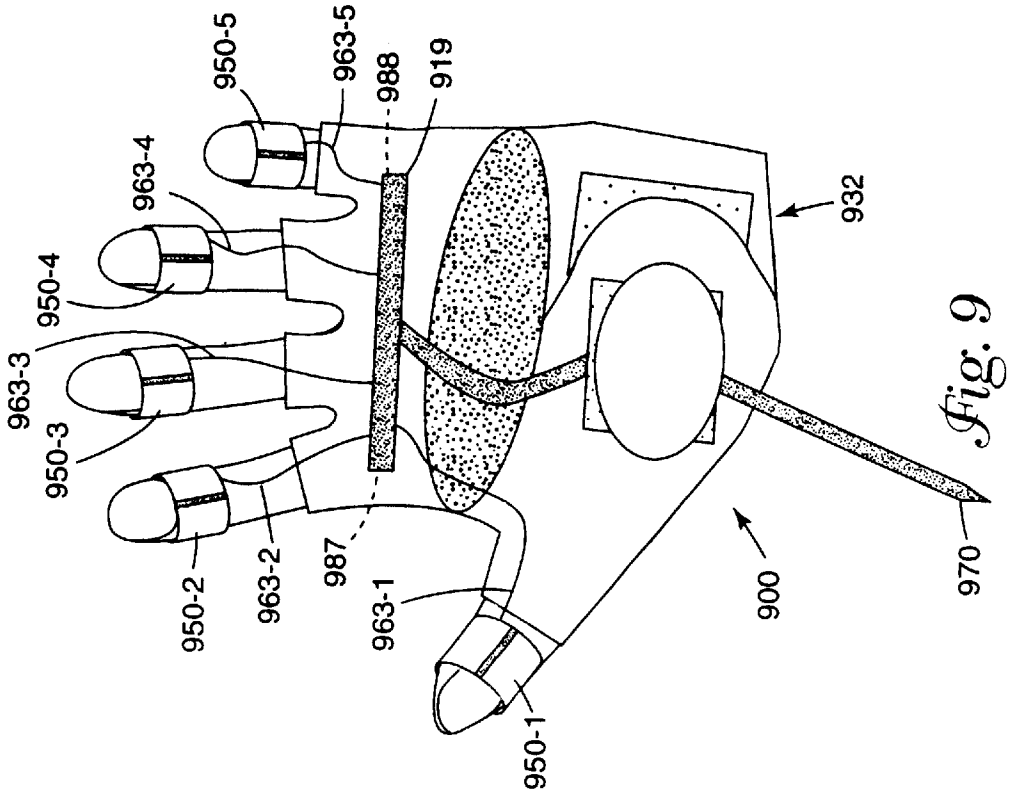
950-5
963-5
988
919
963-4
950-4
963-3
950-3
950-2
963-2
987
963-1
950-1
900
932
970

Fig. 9

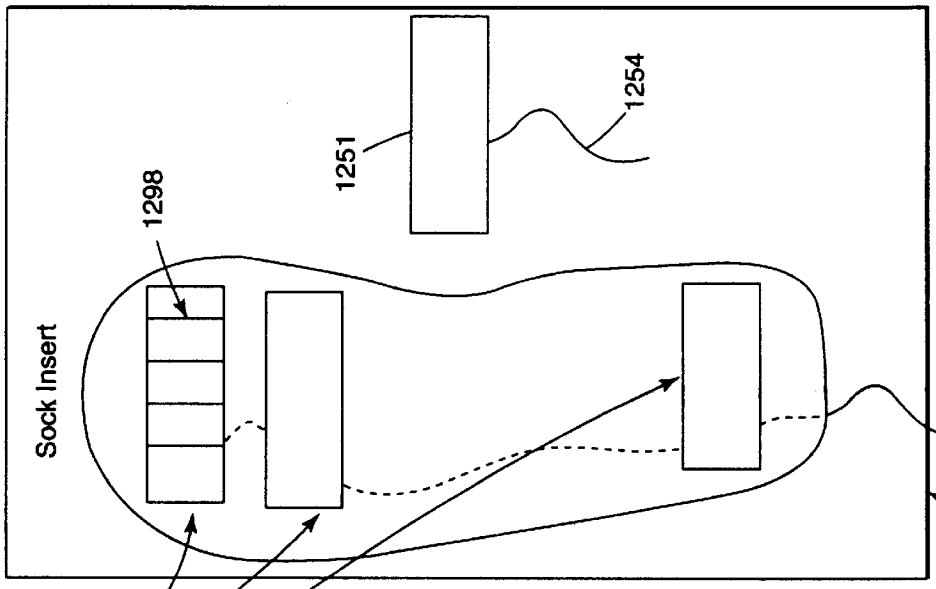

Fig. 12

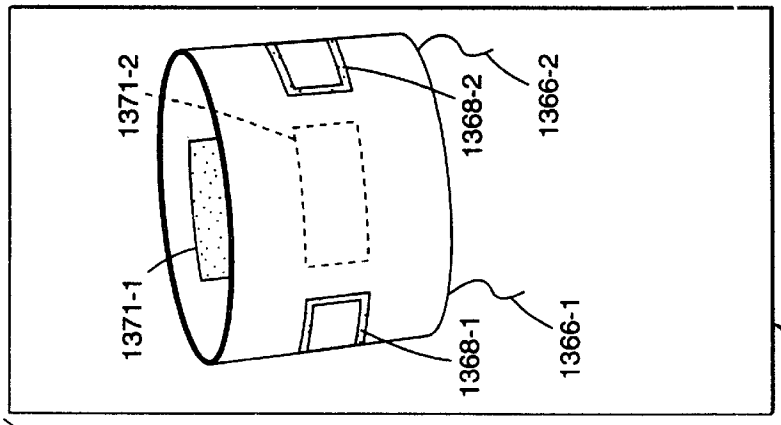

Fig. 13

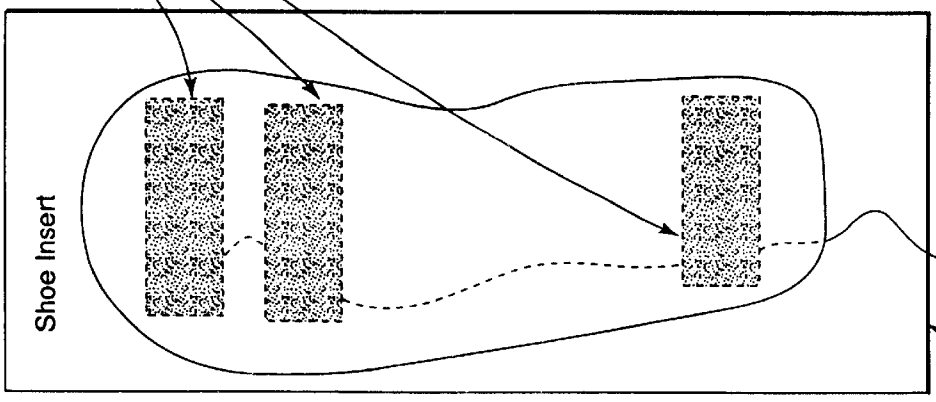

Fig. 11

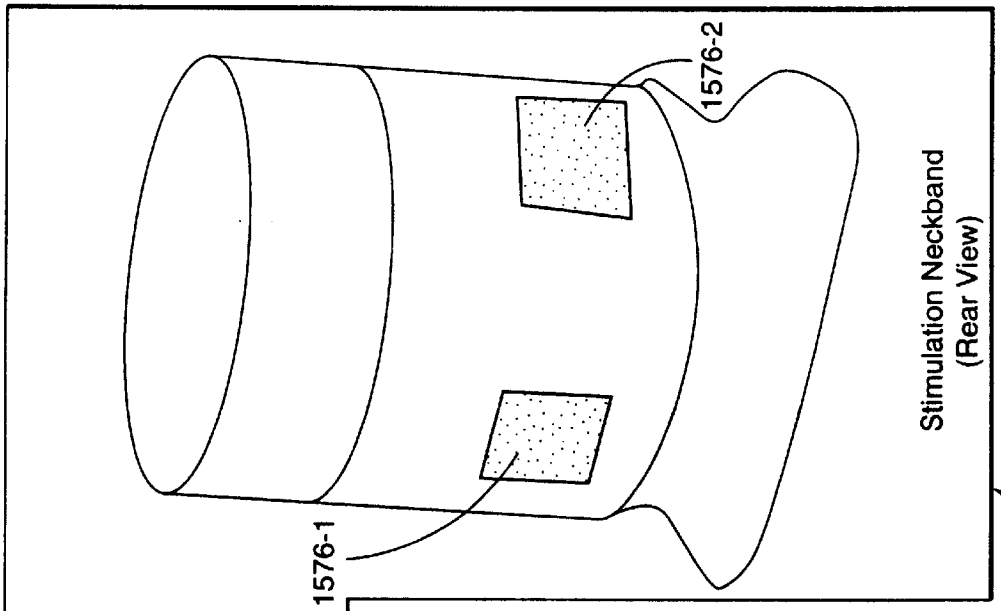
1576-2
1576-1
Stimulation Neckband
(Rear View)
1500

Fig. 15

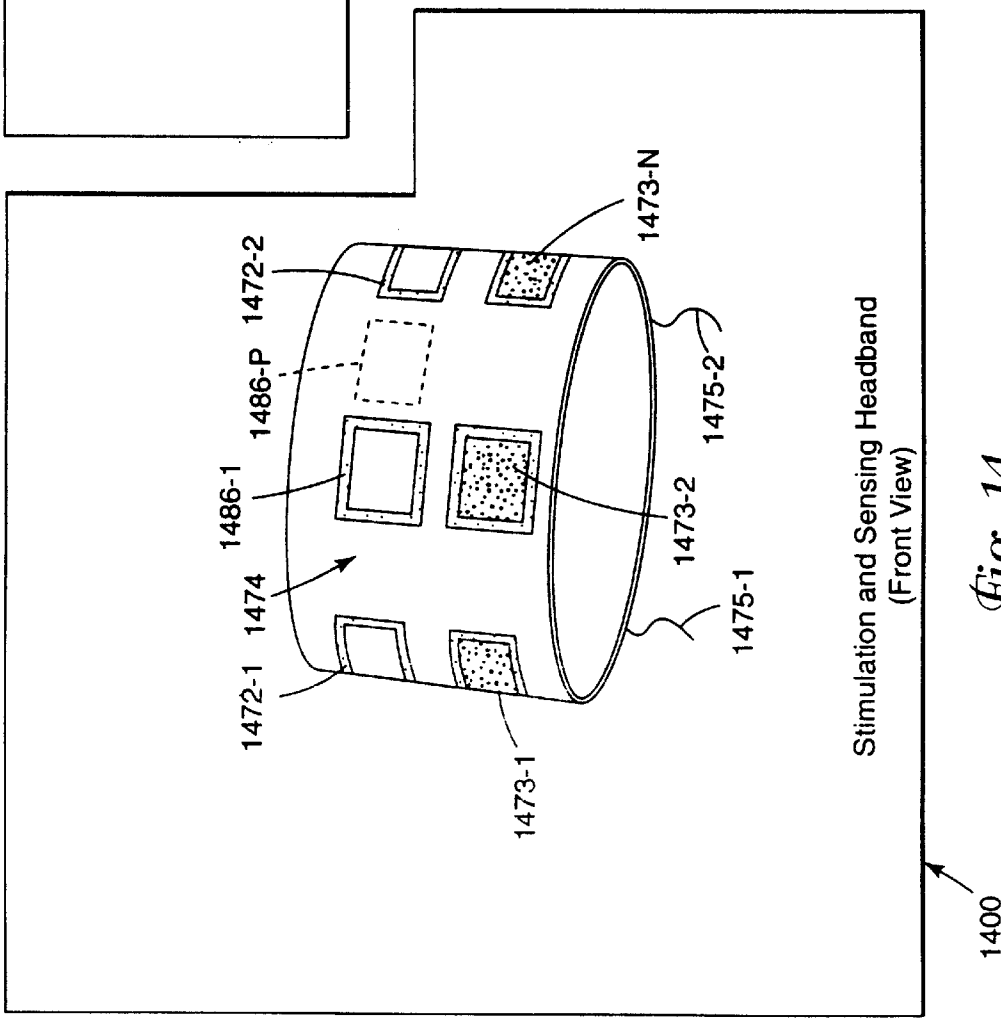
1473-N
1472-2
1486-P
1486-1
1474
1472-1
1473-1
1473-2
1475-2
1475-1
Stimulation and Sensing Headband
(Front View)
1400

Fig. 14

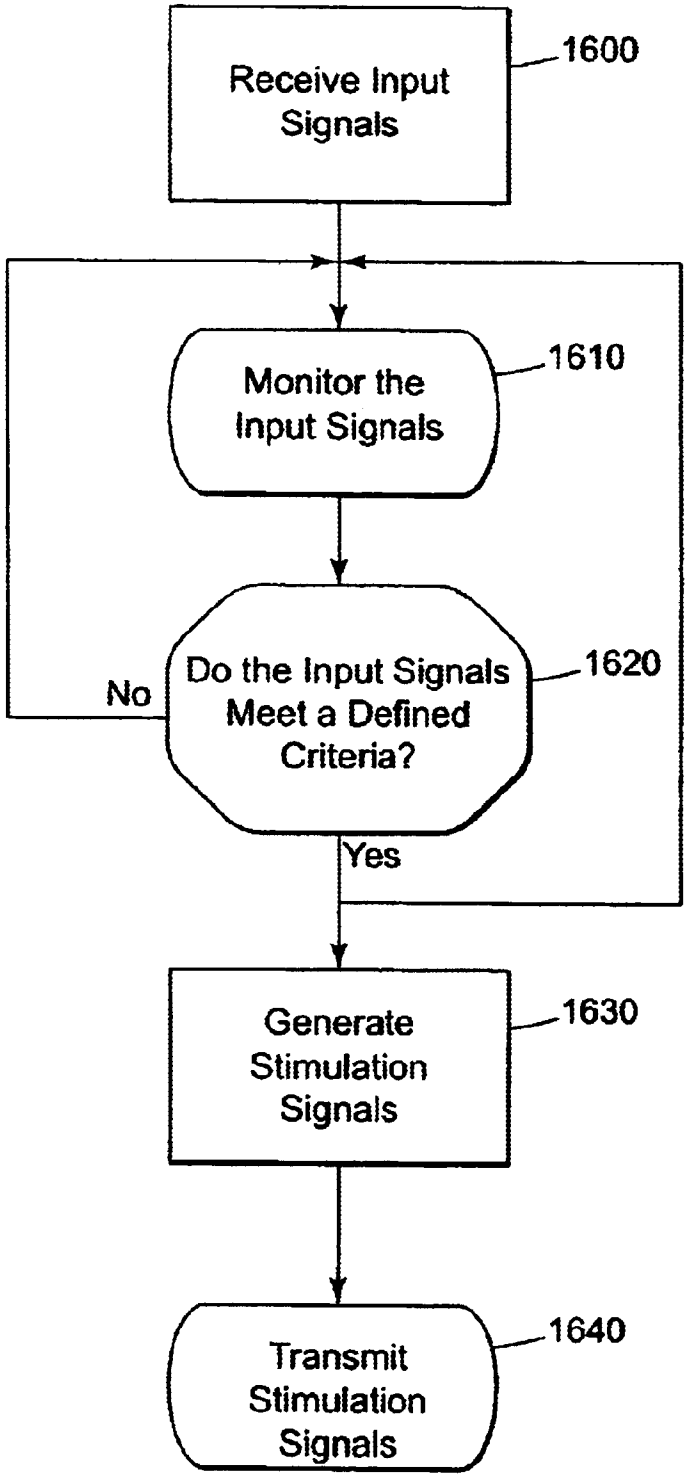
Receive Input Signals
1600
Monitor the Input Signals
1610
Do the Input Signals Meet a Defined Criteria?
1620
No
Yes
Generate Stimulation Signals
1630
Transmit Stimulation Signals
1640

Fig. 16

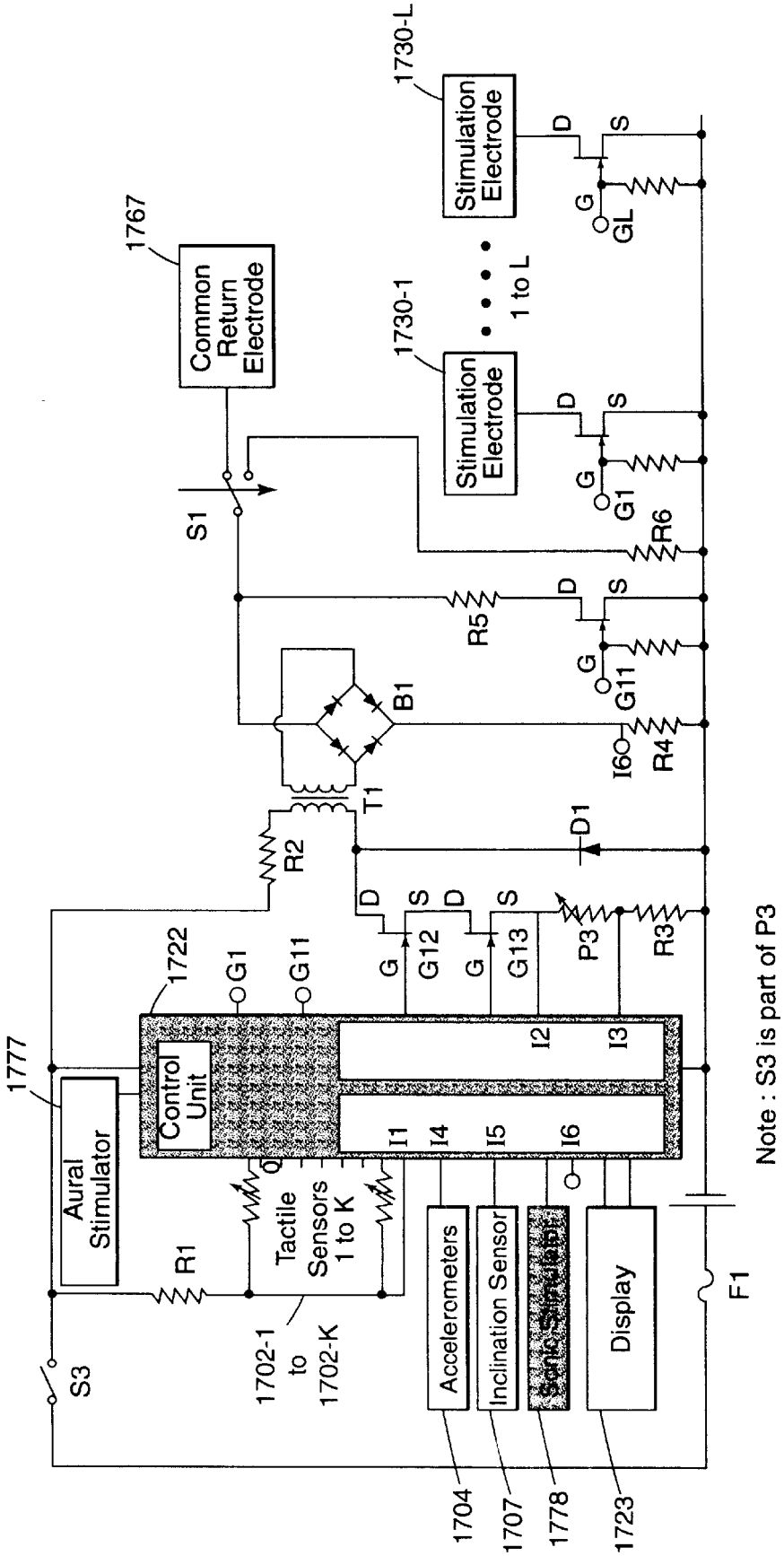
1730-L
Stimulation Electrode
1767
Common Return Electrode
1730-1
Stimulation Electrode
1 to L
S1
R6
R5
B1
G11
G1
GL
I6
R4
T1
D1
R2
G12
G13
P3
R3
1722
G1
G11
1777
Control Unit
I2
I3
I1
I4
I5
I6
Aural Stimulator
Tactile Sensors 1 to K
R1
1702-1 to 1702-K
S3
Accelerometers
Inclination Sensor
Sonic Stimulator
Display
F1
1704
1707
1778
1723
Note : S3 is part of P3
1700

Fig. 17

ADAPTIVE STIMULATOR FOR RELIEF OF SYMPTOMS OF NEUROLOGICAL DISORDERS

CROSS REFERENCE TO RELATED APPLICATIONS

This application is related to and claims the benefit of the filing date of provisional application Ser. No. 60/204,404 (the '404 Application), filed on May 16, 2000. The '404 Application is incorporated by reference.

TECHNICAL FIELD

The present invention relates generally to the field of electronics and, in particular, to the relief of Parkinson's disease symptoms using electrical stimulation.

BACKGROUND

Parkinson's disease is a neurodegenerative disorder that affects approximately one percent of the population over age 50 and up to two and a half percent of the population over age 70. The disease is currently of unknown origin, but appears to be the result a deficiency in dopamine (a neurotransmitter) due to the degeneration of an area of the brain known as the substantia nigra pars compacta.

Currently there is no diagnostic test for Parkinson's disease and diagnosis is based on the presence of characteristic symptoms and elimination of other potential causes through magnetic resonance imaging (MRI). At this time there is no cure for Parkinson's disease, only treatment to relieve the symptoms. The cardinal symptoms of Parkinson's disease are paucity of spontaneous movements, slowness of movement, rigidity of muscle tone, and the characteristic tremor at rest. In addition, there is often a mask-like facial expression and flexed posture. Treatment with medication to relieve the symptoms of Parkinson's disease is typically effective in the early stages of the disease's progression. However, the medication's effectiveness is highly variable from patient to patient. Medications also have undesirable side effects that get worse with increased dosage. As the disease progresses, it becomes more difficult to meter the medication to bring symptomatic relief while minimizing side effects. For example, some patients may be able to manage symptoms effectively with medication for 25 years. While other patients may experience intolerable side effects from increased dosage of medication within 5 years. The rate of disease progression is also highly variable.

When medication can no longer effectively manage symptoms, the patient has limited options. These include brain surgeries that lesion specific overactive areas in the brain and implanted electrodes in overactive brain areas that are controlled by a pacemaker-like device for stimulation. The stimulation appears to dampen the firing of overactive neurons providing similar symptomatic relief to the lesions. These surgical procedures are high-risk with the potential for causing hemorrhaging, blindness, or stroke.

Loss of sensing function is the major contributor to manifestation of symptoms associated with Parkinson's disease. The loss of sensing function or inability to process sensing information leads to problems with joint position sense (observation). This in turn leads to instability in the control loops of the Basil Ganglia, causing oscillation (tremor), out of phase control signals (rigidity), and the inability to initiate a relative motor plan (akinesia) and slowed movement execution (bradykinesia). The instability results in the presentation of symptoms where a patient is

unaware of a bent arm, drooping head, stooped posture, slowed gait, or lack of arm swing. As a result there is a need in the art to provide relief to patients affected with Parkinson's disease.

For the reasons stated above, and for other reasons stated below which will become apparent to those skilled in the art upon reading and understanding the present specification, there is a need in the art for improvements in techniques to provide patients affected with Parkinson's disease relief from the symptoms.

SUMMARY

The above mentioned problems with treatment of the symptoms of Parkinson's disease and other problems are addressed by embodiments of the present invention and will be understood by reading and studying the following specification.

In one embodiment, an adaptive stimulator is provided. The stimulator includes a control unit and at least one stimulation electrode coupled to an output of the control unit. The at least one stimulation electrode is adapted to provide stimulation to an area of the body of a living subject. The adaptive stimulator includes at least one sensor coupled to the control unit and adapted to be disposed external to the human body. The sensor is adapted to respond to physical stimulus and provide input to the control unit. The adaptive stimulator is adapted to selectively provide stimulation in response to the control unit.

In another embodiment, a method of adaptive stimulation is provided. The method includes receiving one or more input signals. At least one of the input signals is based on physical stimulus. The method also includes monitoring the received input signals and selectively generating one or more stimulation signals when the one or more input signals meet defined criteria. The method further includes transmitting the one or more stimulation signals to an area of the body of a living subject. The one or more stimulation signals aid in the relief of symptoms of neurological disorders.

In another embodiment, a control unit adapted to aid in the relief of symptoms of Parkinson's disease is provided. The control unit includes an input that is adapted to couple to one or more sensors that are adapted to respond to physical stimulus. The control unit also includes a controller that is coupled to the input and a waveform generator coupled to the controller. The control unit further includes an output coupled to the controller and adapted to couple to one or more stimulation electrodes that are adapted to provide stimulation to an area on the human body. In addition, the control unit includes a stimulation voltage pulse generator coupled to the controller.

BRIEF DESCRIPTION OF THE DRAWINGS

FIG. **1** is a block diagram of an embodiment of an adaptive stimulator constructed according to the teachings of the present invention.

FIG. **2** is an illustration of a cylindrical view of one embodiment of a cylindrical stimulation electrode constructed according to the teachings of the present invention.

FIG. **3** is an illustration of an inside plane view of one embodiment of a cylindrical stimulation electrode constructed according to the teachings of the present invention.

FIG. **4** is an illustration of a cylindrical view of one embodiment of a cylindrical tactile sensor constructed according to the teachings of the present invention.

FIG. **5** is an illustration of an inside plane view of one embodiment of a cylindrical tactile sensor shown constructed according to the teachings of the present invention.

FIG. **6** is an illustration of one embodiment of an assembly for a cylindrical tactile sensor and a cylindrical stimulation electrode insert cylindrical tactile sensor constructed according to the teachings of the present invention.

FIG. **7** is an illustration of a palm view of one embodiment of a tactile sensor and stimulation glove constructed according to the teachings of the present invention.

FIG. **8** is an illustration of a top view of one embodiment of a tactile sensor and stimulation glove constructed according to the teachings of the present invention.

FIG. **9** is an illustration of a top view of one embodiment of a tactile sensor and stimulation glove integrated with finger sensors constructed according to the teachings of the present invention.

FIG. **10** is an illustration of one embodiment of a stimulation and sensing wristband constructed according to the teachings of the present invention.

FIG. **11** is an illustration of one embodiment of a shoe insert constructed according to the teachings of the present invention.

FIG. **12** is an illustration of one embodiment of a sock insert constructed according to the teachings of the present invention.

FIG. **13** is an illustration of one embodiment of a stimulation and sensing ankle band constructed according to the teachings of the present invention.

FIG. **14** is an illustration of one embodiment of a stimulation and sensing headband constructed according to the teachings of the present invention.

FIG. **15** is an illustration of one embodiment of a stimulation neckband constructed according to the teachings of the present invention.

FIG. **16** is a flow diagram of one embodiment of method of adaptive stimulation for the treatment of the symptoms of Parkinson's disease according to the teachings of the present invention.

FIG. **17** is a schematic of one embodiment of an adaptive stimulator according to the teachings of the present invention.

DETAILED DESCRIPTION

In the following detailed description, reference is made to the accompanying drawings that form a part hereof, and in which is shown by way of illustration specific illustrative embodiments in which the invention may be practiced. These embodiments are described in sufficient detail to enable those skilled in the art to practice the invention, and it is to be understood that other embodiments may be utilized and that logical, mechanical and electrical changes may be made without departing from the spirit and scope of the present invention. The following detailed description is, therefore, not to be taken in a limiting sense.

FIG. **1** is a block diagram of one embodiment of an adaptive stimulator, shown generally at **100**, constructed according to the teachings of the present invention. Adaptive stimulator **100** includes a control unit **120** coupled to at least one sensor **110**. The at least one sensor **110** is responsive to physical stimulus such as pressure, acceleration, inclination or the like. In addition, adaptive stimulator **100** includes one or more stimulation electrodes **130** coupled to an output of control unit **120**. Each stimulation electrode **130** or more than one electrodes **130** include a common return electrode. The common return electrode is in direct contact with the skin and provides the return path for each of the electrical stimulation electrodes attached to the body. It provides a large surface and as a result a lower impedance than each of the stimulation electrodes, this will aid in keeping the current at the contact location at a comfortable level for the patient. Each sensor **110** is strategically located to receive information based on human body functions such as tactility (pressure), movement (acceleration), placement (inclination) and the like. Each sensor **110** provides information to control unit **120**. Control unit **120** receives the information and uses the information to determine when electrical stimulation is required at the location of each stimulation electrode **130**. Control unit **120** selectively adjusts stimulation voltage, frequency, pulse width, waveform shape, amplitude, modulation type and the like of each electrical stimulation signal based on sensor information. Modulation type allows selection of one of a collection of dynamic waveform changes that vary amplitude, frequency or pulse width in some predetermined manner. In some applications, the body adapts to static waveforms decreasing sensitivity and this modulation feature prolongs stimulation effectiveness.

In one embodiment, adaptive stimulator **100** includes a display **132** coupled to control unit **120**. In another embodiment, adaptive stimulator **100** includes a control panel **133** coupled to control unit **120**. In an alternate embodiment, adaptive stimulator **100** includes an integrated display and control panel **123** coupled to control unit **120**. Control panel **133** and integrated control panel **123** provide an operator interface for modification of operation of adaptive stimulator **100**. In an embodiment, having a standalone control panel **133** or integrated control panel **123**, control unit **120** selectively adjusts stimulation voltage, frequency, pulse width, waveform shape, amplitude, modulation type and the like based on sensor information and operator controls.

In one embodiment, control unit **120** includes a controller **122** that receives information from sensors **110**. Controller **122** includes software that includes algorithms for processing the information from input signals and determines the response(s) required to produce simulation and stimulation. The controller **122** generates the basic timing for the stimulation waveforms and adjusts frequency, pulse width, waveform shape, and amplitude based on sensor information or sensor information and operator controls.

In one embodiment, control unit **120** includes a stimulation voltage pulse generator **121** coupled to an output of controller **122**. Stimulation voltage pulse generator **121** produces individual stimulation signals for each stimulation electrode **130**. In one embodiment, stimulation signals are phased, as non-overlapping pulses, to prevent unwanted cross coupling of currents between stimulation electrodes **130**. Control unit **120** further includes a waveform generator **126** coupled between controller **122** and stimulation voltage pulse generator **121**. Waveform generator **126** receives input from controller **122** and generates waveforms for input to stimulation voltage pulse generator **121**. In addition, control unit **120** includes an over voltage/current monitoring circuit **128** coupled between stimulation voltage pulse generator **121** and controller **128**. Monitoring circuit **128** monitors stimulation electrode voltage and current and provides information to controller **122** to prevent exposure of the patient to uncomfortable stimulation levels. In one embodiment, control unit **120** includes an amplitude control device **124** coupled between controller **122** and stimulation voltage pulse generator **121**.

In one embodiment, adaptive stimulator **100** includes a telemetry link **101**. Data is transmitted from control unit **120** to a remote processing unit **109** for further collection and

processing of data obtained. In one embodiment, control unit **120** retains information about the operation of the adaptive stimulator **100** to include inputs to and outputs from control unit **120**. In one embodiment, the information is used to track the progress of the disease and to monitor the operation of adaptive stimulator **100**. In one embodiment, the information collected includes sensor and stimulator information. In another embodiment, the information further includes patient information and other data input to the control unit via control panel **133** and/or remote processing unit **109**. In one embodiment, the information is stored in a database, a memory device or the like that is included in control unit **120**. In one embodiment, the information is transmitted to remote processing unit **109** and stored by remote processing unit **109**. In another embodiment, the information is wirelessly transmitted to remote processing unit **109**. In one embodiment, the information is stored remotely by remote processing unit **109** for processing by any one of control unit **120**, remote processing unit **109** or another device directly coupled to control unit **120** or coupled to control unit **120** via remote processing unit **109**.

In one embodiment, adaptive stimulator **100** includes one or more aural stimulators **177**. In one embodiment, the aural stimulator **177** includes a headphone and is driven by controller **122**. In one embodiment, the headphones provide aural cues for drooping or tilted head and cadence for walking and repetitive activities.

In one embodiment, sensor **110** includes a pressure sensor located on an external region of the body. Control unit **120** interrogates the pressure sensor and receives pressure data. The control unit **120** determines if the pressure data meets a certain threshold or criteria. When the pressure data meets or exceeds the determined threshold, the control unit **120** generates stimulation signals and transmits the signals to stimulation electrodes **130**. In one embodiment, the stimulation electrodes are located so as to provide a cue to the finger.

FIG. **2** is an illustration of a cylindrical view of one embodiment of a cylindrical stimulation electrode, shown generally at **200**, constructed according to the teachings of the present invention. Stimulation electrode **200** includes a flexible conductor **235** that aids in fitting the electrode **200** around fingers, thumbs, wrist, ankle and other cylindrically shaped regions of the body. Conductor **235** is coupled to an electrical lead **241** that is coupled to and receives electrical pulses from a control unit such as control unit **120** described with respect to FIG. **1**. The electrical pulses are utilized for cutaneous stimulation of a region of the body by transmission of the electrical pulses to a conductive skin contact area **239** via conductor **235**. In one embodiment, conductor **235** is integral to conductive skin contact area **239**, which is located on the inside of cylindrical electrode **200**.

In one embodiment, conductive skin contact area **239** comprises conductive electrolytes for electrically coupling cylindrical electrode **200** to the skin in the form of fluids, gels, a flexible conductive fabric or material or the like. In one embodiment, conductive skin contact area **239** comprises a conductive adhesive gel for electrically coupling cylindrical electrode **200** to the skin. This conductive gel is adhesive in nature so that it may perform a dual function by both electrically coupling the electrode to the body and adhering the electrode to the body. In one embodiment, the conductive adhesive gel is disposed as a separate adhesive electrically conductive pad that is coupleable to stimulation electrode **200**. Thus, only an expendable gel pad material need be disposable. In another embodiment, cylindrical stimulation electrode **200** is disposable.

Stimulation electrode **200** further includes a non-conductive skin contact area **237** located on the inside of cylindrical electrode **200**. In one embodiment, stimulation electrode **200** includes an electrically insulative material **231** on the exterior of the cylindrical stimulation electrode. In one embodiment, the electrically insulative material **231** has elastic properties such that the cylindrical stimulation electrode **200** can be adjusted to fit many different sized fingers, ankles, wrists or the like. In another embodiment, stimulation electrode **200** includes a seam **269** that has elastic properties that allows the cylindrical stimulation electrode **200** to be adjusted to fit many different sized fingers, ankles, wrists or the like. In another embodiment, cylindrical electrode **200** adjusts to fit a variety of different sized body parts for example one size that fits a variety of upper arms, forearms, wrists, torsos, ankles, knees, calves, thighs or the like.

FIG. **3** is an illustration of an inside plane view of one embodiment of a cylindrical stimulation electrode, shown generally at **300**, constructed according to the teachings of the present invention. Stimulation electrode **300** includes a conductor **335** coupled to an electrical lead **341**. Electrical lead **341** is coupled to and receives electrical pulses form a control unit such as control unit **120** described with respect to FIG. **1**. The electrical pulses are utilized for cutaneous stimulation of a region of the body by transmission of the electrical pulses to a conductive skin contact area **339** via conductor **335**. In one embodiment, conductor **335** is integral to conductive skin contact area **339**.

In one embodiment, conductive skin contact area **339** comprises conductive electrolytes for electrically coupling stimulation electrode **300** to the skin in the form of fluids, gels, a flexible conductive fabric or material or the like. In one embodiment, conductive skin contact area **339** comprises a conductive adhesive gel for electrically coupling stimulation electrode **300** to the skin. In one embodiment, the conductive adhesive gel is disposed as a separate adhesive electrically conductive pad that is coupleable to stimulation electrode **300**. The adhesive pad is disposable and replaced after each use. In another embodiment, stimulation electrode is disposed when wear dictates replacement.

Stimulation electrode **300** further includes a non-conductive skin contact area **337** coupled to either side of conductive area **339**. In one embodiment, stimulation electrode **300** includes a seam **369** made of a material that has elastic properties such that the stimulation electrode **300** can be adjusted to fit different sizes of similar body parts. In one embodiment, cylindrical stimulation electrode **300** adjusts to fit a variety of different sized fingers. In another embodiment, cylindrical electrode **300** adjusts to fit a variety of different sized body parts for example one size that fits a variety of upper arms, forearms, wrists, torsos, ankles, knees, calves, thighs or the like.

FIG. **4** is an illustration of a cylindrical view of one embodiment of a cylindrical tactile sensor, shown generally at **400**, constructed according to the teachings of the present invention. Tactile sensor **400** includes a pressure sensor **408** that is integral to the body **405** of the tactile sensor **400**. The pressure sensor **408** is coupled to a first electrical lead **496** and a second electrical lead **497**. The first and second electrical leads **496** and **497** are coupled to a control unit such as control unit **120** discussed with respect to FIG. **1**. In one embodiment, the first lead **496** receives a request for information from the control unit and the second lead **497** provides a response signal to the control unit containing pressure information. In another embodiment, the first lead **496** and second lead **497** each provide pressure information

to the control unit for a determination as to whether stimulation should be provided. In one embodiment, the body **405** of tactile sensor **400** is fabricated of a material that has elastic properties such that the tactile sensor **400** can be adjusted to fit many different sized fingers, ankles, wrists or the like. In another embodiment, the body **405** of tactile sensor **400** includes a seam **467** that is fabricated of a material that has elastic properties such that the tactile sensor **400** can be adjusted to fit many different sized body parts. In one embodiment, cylindrical tactile sensor **400** adjusts to fit a variety of different sized fingers. In another embodiment, cylindrical tactile sensor **400** adjusts to fit a variety of different sized body parts for example one size that fits a variety of upper arms, forearms, wrists, torsos, ankles, knees, calves, thighs or the like. In one embodiment, tactile sensor **400** includes a pad **406** coupled to pressure sensor **408**. Pad **406** is made of a material, such as rubber, neoprene or the like, which aids in gripping. In an embodiment, where pressure sensor **400** fits on a finger tip, the pad **406** is adapted to aid in contacting buttons, switches, and the like.

FIG. **5** is an illustration of an inside plane view of one embodiment of a cylindrical tactile sensor, shown generally at **500**, constructed according to the teachings of the present invention. Tactile sensor **500** includes a pressure sensor **508** that is integral to the body **505** of tactile sensor **500**. Pressure sensor **508** is coupled to a first and a second electrical lead **596** and **597** respectively. The first and second electrical leads **596** and **597** are coupled to a control unit such as control unit **120** discussed with respect to FIG. **1**. In one embodiment, the first lead **596** receives a request for information from the control unit and the second lead **597** provides a response signal to the control unit containing pressure information. In another embodiment, the first lead **596** and second lead **597** each provide pressure information to the control unit for a determination as to whether stimulation should be provided. In one embodiment, the body **505** of tactile sensor **500** is fabricated of a material that has elastic properties such that tactile sensor **500** can be adjusted to fit many different sized body parts. In another embodiment, the body **505** of tactile sensor **500** includes a seam **567** that is fabricated of a material that has elastic properties. In one embodiment, cylindrical tactile sensor **500** adjusts to fit a variety of different sized fingers. In another embodiment, cylindrical tactile sensor **500** adjusts to fit a variety of different sized body parts for example one size that fits a variety of upper arms, forearms, wrists, torsos, ankles, knees, calves, thighs or the like. In one embodiment, tactile sensor **500** includes a pad **506** coupled to pressure sensor **508**. Pad **506** is made of a material, such as rubber, neoprene or the like, which aids in gripping. In an embodiment, where pressure sensor **500** fits on a finger tip, the pad **506** will aid in contact with buttons, switches, and the like.

In one embodiment, a cylindrical tactile sensor such as **400** or **500** fits together with a stimulation electrode such as **200** or **300** to create an assembly used to monitor pressure at a location on the body and provide electrical stimulation to that area. In one embodiment, tactile sensor **400** or **500** fits over stimulation electrode **200** or **300** to form a single integrated assembly. FIG. **6** is an illustration of one embodiment of an assembly **600** for a cylindrical tactile sensor **611** and a cylindrical stimulation electrode insert **612**. In one embodiment, this assembly is coupled to a control unit such as **120** discussed with respect to FIG. **1**. The control unit monitors the pressure measurements received and adaptively stimulates the area of the body that the adhesive conductor of the stimulation electrode comes in contact with in order to provide a cue to produce an appropriate response. For example in one embodiment, the assembly is used to monitor pressure measurements at a fingertip. When the monitored pressure measured by the tactile sensor meets a defined threshold for that assembly location, the control unit generates stimulation waveforms having a defined pulse width, amplitude, frequency, and waveform shape for stimulation of the area based on the specific application. In this manner, finger movement timing for patients suffering from Parkinson's disease can be improved or restored. Cutaneous stimulation is applied or modified when a finger is pressed against a surface provides an orienting tactile cue. In one embodiment, this cue provides a cadence, enabling timed repetitive action.

FIG. **7** is an illustration of a palm view of one embodiment of a tactile sensor and stimulation glove, shown generally at **700**, constructed according to the teachings of the present invention. A glove **785** includes a first and a second tactile sensor assembly **794** and **795** respectively. In one embodiment, each tactile sensor assembly includes a stimulation electrode **793**, which is in direct contact with the palm of the hand, glove material **792** sandwiched between the electrode **793** and a pressure sensor **791**, and a gripping material **796**, such as rubber, neoprene, or the like, on top of pressure sensor **791**. The first tactile sensor assembly **794** is coupled to a first electrical lead **788** and the second tactile sensor assembly **795** is coupled to a second electrical lead **789**. Each electrical lead **788** and **789** is coupled to a control unit such as control unit **120** discussed with respect to **120**. In one embodiment, the electrical leads provide pressure information to a control unit for a determination of the need for stimulation. In one embodiment, glove **785** is fabricated of a material having elastic properties to aid in fitting a variety of different sized hands.

FIG. **8** is an illustration of a top view of one embodiment of a tactile sensor and stimulation glove, shown generally at **800**, constructed according to the teachings of the present invention. The glove **825** includes a wire connector **819** for connection to additional sensors such as pressure sensor assemblies attached to one or more fingers or thumb, acceleration or pressure sensors attached to the wrist, forearm, upper arm or the like. Wire connector **819** includes a connection cable **870** for coupling to a control unit, such as control unit **120**, of FIG. **1**. In one embodiment, connection cable **870** comprises all of the wiring to and from the control unit for stimulation and transmission of sensor information. In addition, stimulation glove **825** includes a common return electrode **832**. Common return electrode **832** is in direct contact with the skin and provides the return path for each of the electrical stimulation electrodes attached to the body. It provides a large surface and as a result a lower impedance than each of the stimulation electrodes, this is adapted to aid in keeping the current at the contact location at a comfortable level for the patient. In one embodiment, the common return path includes a lead coupled to the control unit. In another embodiment, the common return path includes a lead within connection cable **870** coupled to the control unit.

In one embodiment, glove **825** includes a strain relief **827** in order to adjust the placement of connection cable **870**. In one embodiment, glove **825** includes an adjustable flap **829** which is secured with attachment devices such as snaps, buckles, straps, hook and pile or the like. In one embodiment, glove **825** is fabricated of a material having elastic properties. In one embodiment, the features of stimulation glove **785** of FIG. **7** and the features of stimulation glove **825** are combined to create an integrated tactile sensor

and stimulation glove which is coupled to a control unit such as control unit **120** of FIG. **1**. In one embodiment, the integrated tactile sensor and stimulation glove **825** includes one or more of the following features: one or more fingertip/thumb pressure/stimulation assemblies, one or more pressure/stimulation assemblies mounted on the palm of the glove, fabricated of flexible material, a wire connector such as **819**, a connection cable such as **870**, an adjustable flap such as **829** and a strain relief such as **827**.

FIG. **9** is an illustration of a top view of one embodiment of a tactile sensor and stimulation glove integrated with finger sensors, shown generally at **900**, constructed according to the teachings of the present invention. Glove **900** includes a wire connector **919** coupled to electrical leads **963-1** to **963-5** that are coupled to tactile sensor and stimulation electrode assemblies **950-1** to **950-5** respectively. In one embodiment, wire connector **919** is coupled to electrical leads **987** and **988** that are coupled to first and second tactile sensors (not shown), such as sensors **794** and **795** of FIG. **7**. Glove **900** further includes a connection cable **970** that connects wire connector **919** to a control unit, such as control unit **120** of FIG. **1**. In addition, glove **900** includes a common return electrode **932**. In one embodiment, glove **900** includes one or more tactile sensor and stimulation electrode assemblies **950** as required for each application. In an alternate embodiment, additional electrode stimulators may also be attached to stimulate forearm, upper arm, and shoulder.

FIG. **10** is an illustration of one embodiment of a stimulation and sensing wristband, shown generally at **1000**, constructed according to the teachings of the present invention. Wristband **1000** includes first and second stimulation electrodes **1044-1** and **1044-2** located on the left and right sides of the wrist. In one embodiment, wristband **1000** includes a first and a second acceleration sensor (accelerometers) **1042-1** and **1042-2** located on the top and bottom sides of the wrist. Wristband **1000** includes a first and a second electrical lead **1046-1** and **1046-2** coupled to the first and second stimulation electrodes **1044-1** and **1044-2**, respectively. In one embodiment, the electrical leads **1046-1** and **1046-2** couple to a common wire connector such as the wire connector **919** of FIG. **9**. In another embodiment, the electrical leads **1046-1** and **1046-2** are directly coupled to a control unit such as control unit **120** discussed with respect to FIG. **1**. Electrical stimulation signals and electrical information signals are sent and received via the electrical leads **1046-1** and **1046-2**. In one embodiment, wristband **1000** is fabricated of a material that has elastic properties such that the wristband is adjustable to fit a variety of different sized wrists. It is understood that the number and placement of stimulation electrodes and sensors are for illustration and alternate embodiments may include an appropriate configuration of stimulation electrodes and types of sensors for each application.

FIG. **11** is an illustration of one embodiment of a shoe insert, shown generally at **1100**, constructed according to the teachings of the present invention. In one embodiment, shoe insert **1100** includes first, second and third pressure sensors **1143-1** to **1143-3** located under the toes, on the ball of the foot and on the heel of the foot respectively. In addition, shoe insert **1100** includes an electrical lead **1145** coupled to each of pressure sensors **1143-1** to **1143-3**. In one embodiment, electrical lead **1145** is coupled to a control unit such as control unit **120** discussed with respect to FIG. **1**. Pressure information is transmitted to the control unit for a determination of the need for stimulation. In an alternate embodiment, shoe insert **1100** includes any number of electrical leads attached to sensors based on each application. It is understood that the number, type and location of sensors **1143** are for illustration only and alternate embodiments may include an appropriate configuration of sensors for each application.

FIG. **12** is an illustration of one embodiment of a sock insert, shown generally at **1200**, constructed according to the teachings of the present invention. In one embodiment, sock insert **1200** includes stimulation electrodes **1247-1** to **1247-3**. In one embodiment, stimulation electrodes **1247-1** to **1247-3** include an adhesive conductive gel pad that is in direct contact with the foot. In one embodiment, stimulation electrode **1247-1** is located under the toes and includes ridges **1298** to aid in cupping the toes for direct contact with the toes. Sock insert **1200** includes electrical lead **1253** that is coupled to each of stimulation electrodes **1247-1** to **1247-3**. In one embodiment, electrical lead **1253** is in coupled to a control unit such as control unit **120** of FIG. **1**. Electrical pulses are transmitted to each of stimulation electrodes **1247-1** to **1247-3** as required for each application. In an alternate embodiment, sock insert **1200** includes any number of electrical leads attached to stimulation electrodes in order to control stimulation to the foot based on each application. Sock insert **1200** includes a common return electrode **1251** that is attached to the top of the foot. Common return electrode **1251** is coupled to electrical lead **1254** that is coupled to the control unit and provides the return path for the electrical stimulation pulses.

In one embodiment, shoe insert **1100** and sock insert **1200** are integrated to create an adaptive electrical stimulator.

FIG. **13** is an illustration of one embodiment of a stimulation and sensing ankle band, shown generally at **1300**, constructed according to the teachings of the present invention. Ankle band **1300** includes first and second stimulation electrodes **1371-1** and **1371-2** located on the front and back sides of the ankle, respectively. In one embodiment, ankle band **1300** includes first and second acceleration sensors (accelerometers) **1368-1** and **1368-2** located on the left and right sides of the ankle, respectively. Ankle band **1300** includes first and second electrical leads **1366-1** and **1366-2** coupled to the first and second stimulation electrodes **1371-1** and **1371-2** respectively. In one embodiment, electrical leads **1366-1** and **1366-2** are coupled to a control unit such as control unit **120** of FIG. **1**. Electrical stimulation pulses are provided to stimulation electrodes **1371** and **1371-2** via electrical leads **1366-1** and **1366-2**, respectively. Ankle band **1300** includes electrical leads (not shown) from the control unit to acceleration sensors **1368-1** and **1368-2** in order to receive acceleration information. In one embodiment, ankle band **1300** is fabricated of a material that has elastic properties such that the ankle band is adjustable for a variety of different sized ankles. It is understood that the number and placement of stimulation electrodes and sensors are for illustration and alternate embodiments may include an appropriate configuration of stimulation electrodes and types of sensors for each application.

FIG. **14** is an illustration of one embodiment of a stimulation and sensing headband, shown generally at **1400**, constructed according to the teachings of the present invention. Headband **1400** includes a first and a second stimulation electrode **1472-1** and **1472-2** located on the right and left front of the head, respectively. In addition, headband **1400** includes a first electrical lead **1475-1** coupled to the first stimulation electrode **1472-1** and a second electrical lead **1475-2** coupled to the second stimulation electrode **1472-2**. The first and second electrical leads **1475-1** and **1475-2** are each coupled to a control unit such as control unit

120 of FIG. 1. The control unit transmits electrical stimulation signals to the electrical stimulation electrodes **1472-1** and **1472-2** via electrical leads **1475-1** and **1475-2** respectively. Electrical stimulation electrodes **1472-1** and **1472-2** are in direct contact with the skin. In one embodiment, electrical stimulation electrodes **1472-1** and **1472-2** each comprise conductive adhesive gel for electrically coupling the electrodes to the skin. In one embodiment, headband **1400** includes accelerometers **1486-1** to **1486**-P as required for each application. In one embodiment, accelerometers **1486-1** to **1486**-P are located on the sides, front and back of the head. In one embodiment, headband **1400** includes inclination sensors **1473-1** to **1473**-N as required for each application. In one embodiment, inclination sensors **1473-1** to **1473**-N are located on the sides, front and back of the head. It is understood that the number and placement of stimulation electrodes and sensors are for illustration and alternate embodiments may include an appropriate configuration of stimulation electrodes and types of sensors for each application.

FIG. **15** is an illustration of one embodiment of a stimulation neckband, shown generally at **1500**, constructed according to the teachings of the present invention. Stimulation neckband includes stimulation electrodes **1576-1** and **1576-2**. In one embodiment, stimulation electrodes **1576-1** and **1576-2** are located at the left and right rear of the neck. In alternate embodiments, stimulation electrodes such as **1576** are strategically located for the specific application. In one embodiment, each stimulation electrode **1576-1** and **1576-2** is coupled to an electrical lead (not shown) that is coupled to a control unit such as control unit **120** and transmits electrical stimulation pulses from the control unit to the electrode. In one embodiment, stimulation neckband includes inclination sensors coupled to the control unit. The inclination sensors provide inclination information for a determination by the control unit for the need for stimulation. It is understood that the number and placement of stimulation electrodes and sensors are for illustration and alternate embodiments may include an appropriate configuration of stimulation electrodes and types of sensors for each application.

In one embodiment, impaired voluntary movements (akinesia) are broken using aural, visual, or tactile external stimulation. Synthesized tactile stimulation with an adaptive stimulator will provide the cues to enable properly timed repetitive motion.

FIG. **16** is a flow diagram of one embodiment of a method of adaptive stimulation for the treatment of the symptoms of Parkinson's disease according to the teachings of the present invention. The method at **1600** receives one or more input signals from at least one sensor such as pressure, inclination, acceleration or the like, wherein the input signals are based on physical stimulus. The method proceeds to **1610** and monitors the received input signals. The method then proceeds to **1620** and determines if the input signals meet defined criteria. If the input signals meet defined criteria the method proceeds to **1630** and generates one or more stimulation signals. If the input signals do not meet defined criteria, the method proceeds to **1610** and continues to monitor the input signals. In addition, when the input signals meet defined criteria the method continues to monitor the input signals while the method proceeds. Once the stimulation signals are generated the method proceeds to **1640** and transmits the one or more stimulation signals to one or more stimulators.

In one embodiment, the method further includes monitoring stimulation electrode voltage and current to prevent exposure of the patient to uncomfortable stimulation levels.

In one embodiment, the input signals include pressure, acceleration, inclination information and the like from strategically positioned sensors. In alternate embodiments, the input signals include information from an operator control panel and/or a remotely located processing unit. In one embodiment, an operator to include the patient, a technician, a physician or the like controls the input signals from the operator control panel.

In one embodiment, the input signals are received from a number of sensors for example pressure and acceleration sensors that are mounted on one or more wearable devices such as a headband, a wristband and/or an ankle band. In an alternate embodiment, input signals include operator control signals. A control unit receives the input signals and determines a response based on the input signals. In one embodiment, the response may include aural stimulation, electrical stimulation, and/or sonic stimulation as well as frequency, amplitude, pulse width, waveform shape and duration of stimulation. In one embodiment, the response to input signals includes cadence simulation, tactile simulation, sequenced stimulation or the like.

In one embodiment, the control unit transmits information about the inputs or the stimulation signals to a display. In another embodiment, the control unit wirelessly transmits information to a remote processing unit for data collection or processing.

For example, in one embodiment, the control unit receives inputs that indicate little or no motion (acceleration) at the wrist, potentially signaling that the patient has stopped swinging his/her arm while walking, the patient has stopped walking, the patient is having trouble initiating movement in the arm and the like. As a response the control unit provides stimulation at the wrist in a cadence that emulates the patients normal gait or a stimulation at one or more of the wrist, forearm, hand, upper arm or the like, to cue the patient to move their arm. Each application of an adaptive stimulator is individualized and requires criteria for each patient. The control unit is programmable for each patient to respond based on a set of criteria. In one embodiment, a control unit is programmed to provide electrical stimulation and if the electrical stimulation does not produce the desired result the control unit will adapt to change the voltage, frequency, pulse width, amplitude, waveform and/or the like of the electrical stimulation signals. In an alternate embodiment, the control unit detects that the provided stimulation has not produced the desired result and changes the type of stimulation e.g. from electrical to aural, from aural to electrical, or the like. In a further embodiment, the control unit changes the sequence or the cadence of the stimulation.

In one embodiment, the stimulators comprise stimulation electrodes. In an alternate embodiment, the stimulators comprise sonic stimulators. In a further embodiment, the stimulators comprise aural stimulators. It is understood that the number and type of stimulators is not limited and adaptively stimulating a region of the body to aid in treatment of the symptoms of Parkinson's disease may include any number or type of stimulators and stimulator combinations. In addition, each application can be individualized.

FIG. **17** is a schematic of one embodiment of an adaptive stimulator, shown generally at **1700**, constructed according to the teachings of the present invention. Stimulator **1700** includes a control unit **1722** and a plurality of sensors coupled to the control unit. The sensors include but are not limited to accelerometers **1704**, inclination sensors **1707**, and tactile sensors **1702-1** to **1702**-K. In one embodiment, the tactile sensors **1702-1** to **1702**-K include pressure sen-

sors. In one embodiment, control unit **1722** is also coupled to a plurality of stimulators to include an aural stimulator **1777**, stimulation electrodes **1730-1** to **1730**-L and sonic stimulator **1778**. In addition, stimulator **1700** includes a display and control panel **1723**. In one embodiment, the display is a liquid crystal display.

In operation, the control unit **1722** receives information from one or more sensors **1704, 1707, 1702** and determines when and if aural, electrical, sonic or the like stimulation is required. The control unit **1722** then provides the required stimulation and continues to monitor information received and adapts to modify the type of stimulation, duration, frequency, amplitude and the like in order to produce the desired results, e.g., movement of a finger or fingers, legs, arm or the like, lifting of the head, movement of the body, etc. In one embodiment, control unit **1722** collects and stores information about inputs to and outputs from control unit **1722**. In one embodiment, the information is stored in a database or memory device.

In one embodiment, timing signals are generated by micro-code of control unit **1722**. The micro-code determines the pulse width and frequency for each pulse. For each pulse generated, power field effect transistors (FETs) G**12** and G**13** are gated "on" to allow current flow through the primary of the transformer T**1**. In this embodiment, two field effect transistors G**12** and G**13** are used and individually controlled to prevent a single input/output or FET failure from applying a continuous direct current to the transformer T**1**.

Current flows through the current limiting resistor R**2**, the transformer T**1** primary, FETs G**12** and G**13**, amplitude control potentiometer P**3**, and current monitoring resistor R**3** inducing a current in the secondary. FET G**12** is then gated off and current flows through diode D**1**. Amplitude control is provided by potentiometer P**3** through primary field current limiting. Monitoring of analog inputs **12** and **13** provides an indication of the voltage applied to and current flowing through the primary. Using the turn's ratio, secondary voltage and current may be approximated.

Secondary voltage is rectified using a full wave bridge B**1**. The positive side of the bridge is connected to the positive return electrode. A single stimulation electrode **1730-1** to **1 730**-L is enabled for each pulse out of the transformer secondary. Current monitoring resistor R**4** provides the mechanism for monitoring of secondary current by the control unit **1733** through analog input **16**. Enabling FET G**11** facilitates monitoring of a fixed load secondary voltage. This enables current flow through resistor R**5** forming a resistive bridge with current monitoring resistor R**4**. Based on current flow and known resistance value R**5**, secondary voltage may be approximated.

In one embodiment, a manual shunt of the stimulation electrode voltage is accomplished through human activation of switch S**1**. This disconnects the common return electrode **1767** and shunts the current through resistor R**6**. This produces a transformer secondary over-current status condition in control unit **1722** that shuts down the pulse generation on the primary. In one embodiment, the control unit **1722** will then attempt to reset the pulse generation every three to five seconds while continuing to disable the stimulation electrodes **1730-1** to **1730**-L. The stimulation electrodes **1730-1** to **1730**-L will not be enabled until it is determined that the voltage adjustment potentiometer P**3** has been readjusted to a lower value.

CONCLUSION

An adaptive stimulator has been described. The stimulator includes a control unit and at least one stimulation electrode coupled to an output of the control unit. The at least one stimulation electrode is adapted to provide stimulation to an area of the body of a living subject. The adaptive stimulator includes at least one sensor coupled to the control unit and adapted to be disposed external to the human body. The sensor is adapted to respond to physical stimulus and provide input to the control unit. The adaptive stimulator is adapted to selectively provide stimulation in response to the control unit.

In addition, a method of adaptive stimulation has been described. The method includes receiving one or more input signals. At least one of the input signals is based on physical stimulus. The method also includes monitoring the received input signals and selectively generating one or more stimulation signals when the one or more input signals meet defined criteria. The method further includes transmitting the one or more stimulation signals to an area of the body of a living subject. The one or more stimulation signals aid in the relief of symptoms of neurological disorders.

Further, a control unit adapted to aid in the relief of symptoms of Parkinson's disease has been described. The control unit includes an input that is adapted to couple to one or more sensors that are adapted to respond to physical stimulus. The control unit also includes a controller that is coupled to the input and a waveform generator coupled to the controller. The control unit further includes an output coupled to the controller and adapted to couple to one or more stimulation electrodes that are adapted to provide stimulation to an area on the human body. In addition, the control unit includes a stimulation voltage pulse generator coupled to the controller.

Although specific embodiments have been illustrated and described herein, it will be appreciated by those of ordinary skill in the art that any arrangement, which is calculated to achieve the same purpose, may be substituted for the specific embodiments shown. For example, although this technology is primarily being developed to relieve symptoms of neurological diseases, it has potential for application in other areas. These include symptomatic relief for other disorders, such as, Huntington's disease and rehabilitation therapy for neurological damage. Other applications may include incorporation into flight suits to prevent spatial disorientation of aircrew undergoing high acceleration maneuvers and potential for relieving symptoms of motion sickness. In addition, although the device is primarily designed for an electrical stimulation output stage, it can be modified to provide topical, sonic, aural stimulation or the like.

This application is intended to cover any adaptations or variations of the present invention. Therefore, it is intended that this invention be limited only by the claims and the equivalents thereof.

What it is claimed is:

1. A method of cueing an individual exhibiting one or more symptom's of Parkinson's disease, the method comprising:

monitoring one or more input signals from at least one sensor, wherein the input signals are based on physical stimulus;

generating one or more sensory cues when the one or more input signals meet a desired criteria indicating impaired voluntary movements;

wherein generating one or more sensory cues includes transmitting stimulation signals to one or more stimulators; and

wherein the stimulators comprise aural stimulators, visual stimulators and tactile stimulators.

2. The method of claim 1, wherein the one or more symptoms of Parkinson's disease comprise tremor, rigidity, akinesia, bradykinesia and drooping head.

3. The method of claim 1, wherein monitoring one or more input signals from at least one sensor comprises monitoring one or more input signals from at least one sensor, wherein the at least one sensor comprises inclination sensors, acceleration sensors, and pressure sensors.

4. The method of claim 1, wherein the at least one sensor and one of the one or more stimulators form a single integrated device.

5. The method of claim 1, wherein generating one or more sensory cues comprises generating one or more sensory cues wherein the one or more sensory cues include tactile cues, aural cues, and visual cues.

6. The method of claim 1, further comprising modifying the one or more sensory cues when the input signals indicate the impaired voluntary movement is not broken.

7. The method of claim 6, wherein modifying the one or more sensory cues comprises modifying one or more of the voltage, frequency, pulse width, amplitude, and waveform of the stimulation signals.

8. The method of claim 6, wherein modifying the one or more sensory cues includes altering the cadence of the one or more sensory cues.

9. The method of claim 1, further comprising producing sequenced stimulation patterns.

10. The method of claim 1, wherein generating one or more sensory cues comprises synthesizing two or more of frequency, amplitude, pulse width, waveform shape and duration of stimulation.

11. An adaptive stimulator for cueing an individual exhibiting one or more symptom's of Parkinson's disease, comprising:

means for receiving input signals from one or more sensors, wherein the input signals are based on human body functions;

means for determining impaired voluntary movement based on the input signals;

means for generating one or more sensory cues, when impaired voluntary movement is determined;

wherein the one or more sensory cues include tactile cues, aural cues, and visual cues;

means for selectively transmitting stimulation signals to produce the one or more sensory cues;

means for controlling the means for selectively transmitting stimulation signals and the sensory cues; and

means for selectively adjusting the one or more sensory cues when the impaired voluntary movement is not broken.

12. The stimulator of claim 11, further comprising:

means for monitoring stimulation signal voltage and current and modifying the stimulation signal voltage and current to prevent exposure of the individual to uncomfortable stimulation levels.

13. The stimulator of claim 11, wherein the means for generating one or more sensory cues comprises means for generating one or more sensory cues that simulate the cadence of unimpaired voluntary movements.

14. The stimulator of claim 11, wherein the impaired voluntary movement comprises one or more of tremor, rigidity, akinesia, bradykinesia and drooping head.

15. The stimulator of claim 11, wherein the human body functions include tactility, movement and placement.

16. The stimulator of claim 11, wherein the means for selectively adjusting the one or more sensory cues comprises means for altering the cadence of the one or more sensory cues.

17. The stimulator of claim 11, wherein the means for selectively adjusting the one or more sensory cues comprises means for adjusting the perceived intensity of the one or more sensory cues.

18. The stimulator of claim 11, further comprising means for storing information about the input signals and the stimulation signals.

19. The stimulator of claim 18, wherein the means for storing information comprises a means for storing information about the input signals including the number and type of sensory cues.

20. The stimulator of claim 11, wherein the means for generating tactile cues comprises means for generating tactile cues using one or more of cutaneous electrical stimulation and sonic stimulation.

21. The stimulator of claim 20, wherein the means for selectively adjusting the one or more sensory cues includes a means for adjusting voltage and current of the tactile cues.

22. The stimulator of claim 20, further comprising means for preventing exposure of the individual to uncomfortable stimulation levels by monitoring the voltage and current of the tactile cues and feeding the information back to a control unit for further processing.

23. The stimulator of claim 11, further comprising means for producing sequenced stimulation patterns.

* * * * *