UNITED STATES PATENT AND TRADEMARK OFFICE

_____

BEFORE THE PATENT TRIAL AND APPEAL BOARD

_____

TESLA, INC.,
Petitioner

v.

AUTONOMOUS DEVICES, LLC,
Patent Owner

_____

Case: IPR2023-01055
U.S. Patent No. 11,238,344

_____

PATENT OWNER'S RESPONSE

TABLE OF CONTENTS

I. INTRODUCTION 1

II. THE '344 PATENT 2

III. PERSON OF ORDINARY SKILL IN THE ART 3

IV. ALLEGED PRIOR ART 3

A. GROTMOL (EX. 1004) 3

B. HICKMAN (EX. 1005) 4

V. CLAIM CONSTRUCTION 5

A. "connections" (Claim 16) 6

B. "means for processing" (Claim 20) 10

VI. THE CITED REFERENCES DO NOT RENDER THE CHALLENGED CLAIMS UNPATENTABLE 10

A. Ground 1 Fails 10

1. Claim 7: Grotmol Does Not Disclose the Claimed Modifying, Anticipating, Executing, and Performing 11

2. Claim 8: Grotmol Does Not Disclose the Claimed Modifying and Matching 18

3. Claim 16: Grotmol Does Not Disclose the Claimed Connections 21

B. Ground 2 Fails 23

1. Claim 10: Grotmol Does Not Disclose or Suggest the Claimed Another Learning Process and Another User 23

2. Claim 11: Grotmol Does Not Disclose or Suggest the Claimed Third Circumstance Representation, Another Learning Process, and Third Device 29

C. Ground 3 Fails 34

1. Claims 6, 11 and 12: It Would Not Have Been Obvious to Combine Grotmol and Hickman to Arrive At the Claimed Inventions 38

2. Claim 6: Grotmol and Hickman Do Not Disclose or Suggest the Claimed Second Device 41

3. Claim 11: Grotmol and Hickman Do Not Disclose or Suggest a Correlation Including the Claimed Third Circumstance Representation Detected by a Third Device and Another Learning Process Involving the Third Device 45

4. Claim 12: Grotmol and Hickman Do Not Disclose or Suggest the Claimed Correlation Including the Claimed Third Circumstance Representation Detected by a Third Device, Fourth Circumstance Representation Detected by a Fourth Device, and Anticipating Based on These Circumstance Representations 51

VII. PETITIONER'S OBVIOUSNESS ANALYSIS IN GROUNDS 2 AND 3 IS FAULTY 59

A. Ground 2 60

B. Ground 3 62

VIII. CONCLUSION 62

TABLE OF AUTHORITIES

Page(s)

Cases

Amazon Web Services, Inc. v. Saint Regis Mohawk Tribe,
IPR2019-00103, Paper No. 22 (PTAB May 10, 2019) 38

Arendi S.A.R.L. v. Apple Inc.,
832 F.3d 1355 (Fed. Cir. 2016) 27, 28, 33

DePuy Spine, Inc. v. Medtronic Sofamor Danek, Inc.,
469 F.3d 1005 (Fed. Cir. 2006) 5

Graham v. John Deere Co. of Kansas City,
383 U.S. 1 (1966).....28, 60

In re Kahn,
441 F. 3d 977 (Fed. Cir. 2006) 59

Koninklijke Philips N.V. v. Google LLC,
948 F.3d 1330 (Fed. Cir. 2020) 61

M&K Holdings, Inc. v. Samsung Elecs. Co.,
985 F.3d 1376 (Fed. Cir. 2021) 61

In re Oelrich,
666 F.2d 578 (CCPA 1981).....15, 20

Phillips v. AWH Corp.,
415 F.3d 1303 (Fed. Cir. 2005) 5

Toyota Motor Corp. v. Cellport Systems, Inc.,
IPR2015-00633, Paper 11 (Aug. 14, 2015).....5

TQ Delta, LLC v. Cisco Sys., Inc.,
942 F.3d 1352 (Fed. Cir. 2019) 17, 39

Vivid Techs., Inc. v. Am. Sci. & Eng'g, Inc.,
200 F.3d 795 (Fed. Cir. 1999) 5

Statutes

5 U.S.C. §§ 551-559 60

35 U.S.C. § 103 59

35 U.S.C. § 312(a)(3) 41

35 U.S.C. § 316(e) 1

Other Authorities

37 C.F.R. § 42.22(a)(2) 41

37 C.F.R § 42.104(b)(3)-(4) 41

37 C.F.R. § 100(b) 5

U.S. Patent No. 8,639,644 1

U.S. Patent No. 9,604,359 1

U.S. Patent No. 10,452,974 ..... 26, 31, 48

U.S. Patent No. 11,238,344 ..... *passim*

Exhibit List

Exhibit	Description
2001	Biography of Blair M. Jacobs (previously submitted)
2002	Declaration of Blair M. Jacobs (previously submitted)
2003	Supplemental Declaration of Blair M. Jacobs (previously submitted)
2004	Disclaimer of Claims 1-2 and 19-20 (previously submitted)
2005	District Court Docket (previously submitted)
2006	District Court Scheduling Order (previously submitted)
2007	Declaration of Dr. Eli Saber
2008	Deposition transcript of Dr. Jason Janet dated February 29, 2024 in IPR2023-01055
2009	RESERVED
2010	Institution Decision in IPR2023-01054
2011	U.S. Patent No. 10,452,974
2012	American Heritage Dictionary (1992) Excerpts
2013	Webster's Third New International Dictionary (2002) Excerpts
2014	File history of U.S. Patent No. 10,452,974
2015	Dr. Eli Saber CV

I. INTRODUCTION

Autonomous Devices, LLC ("Patent Owner" or "PO") respectfully submits this Response to the Board's decision to institute trial (Paper 20, the "Decision") and to the Petition for *inter partes* review (Paper 1, the "Petition" or "Pet.") filed by Tesla, Inc. ("Petitioner" or "Tesla"). This Response is timely filed in accordance with the Board's Scheduling Order (Paper 21). The Board instituted review of U.S. Patent No. 11,238,344 ("the '344 patent") on Petitioner's grounds that challenge Claims 3-18 (the "Challenged Claims")[1] of the '344 patent based on anticipation by U.S. Patent No. 9,604,359 ("Grotmol") (Exhibit 1004), obviousness over Grotmol in view of the knowledge of a POSA, and obviousness over Grotmol in view of U.S. Patent No. 8,639,644 ("Hickman") (Exhibit 1005). Decision, 36.

Petitioner has not carried its burden of proving unpatentability by a preponderance of the evidence (35 U.S.C. § 316(e)). As explained below and in the accompanying Declaration of Patent Owner's expert, Dr. Saber, Petitioner has not established that the above-cited prior art references disclose or suggest all of the limitations in any one of the Challenged Claims discussed in this Response or that it

[1] As explained in Patent Owner's Preliminary Response, certain claims have been disclaimed. Ex. 2004. The remaining claims after disclaimer are referred to herein as the "Challenged Claims."

would have been obvious to combine the above-cited references to arrive at the claimed inventions.[2] In addition, Petitioner's expert, Dr. Janet, is not credible in several respects. During cross examination, his testimony was inconsistent and confirmed that he and Petitioner failed to show with particularity and specificity how the claims are mapped to the prior art.

II. THE '344 PATENT

The '344 patent, titled "Artificially intelligent systems, devices, and methods for learning and/or using a device's circumstances for autonomous device operation," discloses systems and methods for learning and using a device's circumstances for autonomous device operation. Ex. 1001, Abstract, 1:39-41. The '344 patent discloses systems and methods for autonomous driving by learning and using a device's circumstances including detecting objects with various properties along with correlated instruction sets for operating the device in various circumstances. *Id.*, 57:58-66; *see also* Ex. 2007, ¶¶47-48. The circumstance and instruction set information is stored together in a knowledgebase and used to operate the device autonomously. Ex. 1001, 57:58-66; *see also* Ex. 2007, ¶¶47-55 (Dr. Saber

[2] Patent Owner submits the Declaration of Dr. Eli Saber (Ex. 2007), an expert in the field of the '344 patent. Ex. 2007, ¶¶1-18; Ex. 2015.

explaining background technology and advantages provided by the ’344 patent technology).

III. PERSON OF ORDINARY SKILL IN THE ART

Patent Owner adopts Petitioner’s definition of a person of ordinary skill in the art (POSA). Petition, 4; *see also* Ex. 2007, ¶45. A POSA relevant to the ’344 patent would have at least: (1) a bachelor’s degree in electrical engineering, computer engineering, computer science, systems engineering, or equivalent course work with two to three years of work experience in computer vision, image/video processing, and/or machine learning; or (2) a master’s degree in electrical engineering, computer engineering, computer science, systems engineering, or equivalent course work with a focus in computer vision, image/video processing, and/or machine learning. Petition, 4; *see also* Ex. 2007, ¶¶45-46.

IV. ALLEGED PRIOR ART

The Petition relies on two references for its unpatentability grounds, and those references are summarized below.

A. GROTMOL (EX. 1004)

Grotmol discloses a simplistic method for training and operating a robotic device to follow a simple trajectory based on a simple sequence (i.e. ordered buffer) of images. Ex. 1004, Abstract. If any circumstance occurs for which the simple trajectory is not trained (i.e. different objects, etc.) the robot in Grotmol would not

know what to do or would collide with an obstacle. Ex. 2007, ¶¶66-69. The robotic device "may utilize a camera" to store a "sequence of images of a visual scene seen when following a trajectory during training in an ordered buffer." Ex. 1004, Abstract. During training, "[m]otor commands issued by a trainer corresponding to time instances when the images are acquired may be stored." *Id.*, 39:17-19. During autonomous operation, the robotic device may be configured to compare an acquired image "with one or more images from the training buffer in order to determine the most likely match." *Id.*, Abstract. After an acquired image is matched to an image stored in the training buffer, the best match may be used "to predict motor command for controlling operation of a robot." *Id.*, 27:57-58; Ex. 2007, ¶¶66-69.

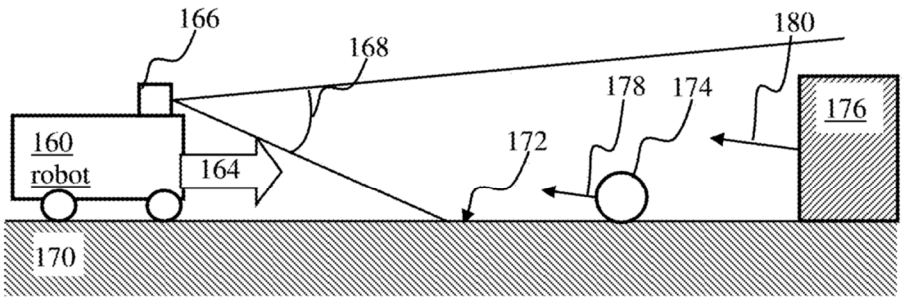

FIG. 1

Ex. 1004, Fig. 1.

B. HICKMAN (EX. 1005)

Hickman relates to "shared robot knowledge bases for use with cloud computing systems." Ex. 1005, Abstract. "[T]he cloud computing system" in

Hickman "collects data from a robot about an object the robot has encountered in its environment, and stores the received data in the shared robot knowledge base." *Id.* Hickman teaches a method whereby "information in the shared robot knowledge base is updated based on robot experiences so that any particular robot may benefit from prior experiences of other robots." *Id.*; *see also* Ex. 2007, ¶¶70-72.

V. CLAIM CONSTRUCTION

The claims in an *inter partes* review are construed using the same standard that applies in district court proceedings, as set forth in *Phillips v. AWH Corp.*, 415 F.3d 1303 (Fed. Cir. 2005) (en banc). 37 C.F.R. § 100(b) (2019). Claim terms are afforded "their ordinary and customary meaning," which is "the meaning that the term would have to a person of ordinary skill in the art in question at the time of the invention." *Phillips*, 415 F.3d at 1312–13. "In determining the meaning of the disputed claim limitation, we look principally to the intrinsic evidence of record, examining the claim language itself, the written description, and the prosecution history, if in evidence." *DePuy Spine, Inc. v. Medtronic Sofamor Danek, Inc.*, 469 F.3d 1005, 1014 (Fed. Cir. 2006) (citing *Phillips*, 415 F.3d at 1312-17). The Board, however, only construes the claims when necessary to resolve the underlying controversy. *Toyota Motor Corp. v. Cellport Systems, Inc.*, IPR2015-00633, Paper 11 at 16 (Aug. 14, 2015) (citing *Vivid Techs., Inc. v. Am. Sci. & Eng'g, Inc.*, 200 F.3d 795, 803 (Fed. Cir. 1999)).

Patent Owner proposes a construction for one term ("connections") that appears in claim 16, and that term is discussed below in Section V.A. Additionally, claim terms for which Petitioner proposed a construction (Petition, 4-5) do not need construction because the claims reciting those terms have been disclaimed, as discussed below in Section V.B.

A. "connections" (Claim 16)

Claim 16 recites "connections" between at least a portion of an object representation and at least a portion of an instruction set. Claim 16 recites in part:

> wherein the first circumstance representation correlated with the first one or more instruction sets for operating the first device include at least a portion of the first one or more object representations connected, using at least one or more ***connections***, with at least a portion of the first one or more instruction sets for operating the first device.

Ex. 1001, Claim 16 (emphasis added).

In the context of claim 16 of the '344 patent, including in light of the claims, specification, and drawings, a "connection" should be construed as a "relationship that includes a link." Ex. 2007, ¶¶56-63. This construction is supported by the claims, specification, drawings, and intrinsic record as a whole. *Id.* Figure 17 of the '344 patent makes clear that a connection is a relationship that includes a link:

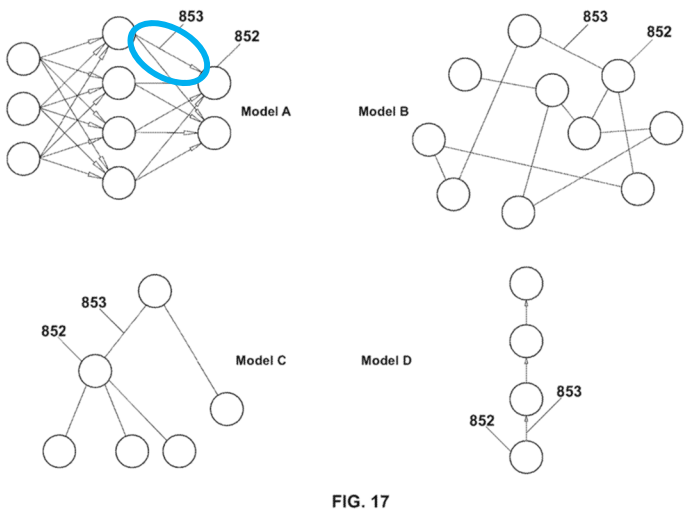

FIG. 17

Ex. 1001, Figure 17 (annotated to show Connection 853 in blue); Ex. 2007, ¶¶56-63.

In describing Figure 17, in this particular use of connections, the ’344 patent states that “machine learning, knowledge structuring or representation, decision making, pattern recognition, and/or other artificial intelligence functionalities may include a network of Nodes 852 (also referred to as neurons, etc.) and Connections 853 similar to that of a brain. Node 852 can store any data, object, data structure, and/or other item, or reference thereto.” Ex. 1001, 103:53-59. For example, a node may include at least a portion of a circumstance representation or at least a portion of an object representation while another node may include at least a portion of an instruction set, and the two nodes may be in a relationship that includes a connection

or link. As shown for example in Model A in Figure 17, in this particular use of connections, Connections 853 are included in connecting or linking Nodes 852. *Id.*, 103:33-62. Connections are included as some of the elements connecting those nodes and showing relationships between those nodes. Ex. 2007, ¶¶56-61. Further, "Connection 853 may include or be associated with a value such as a symbolic label or numeric attribute (i.e. weight, cost, capacity, length, etc.)." Exhibit 1001, 104:3-6.

In this particular use of connections, Figure 18A of the '344 patent also makes clear that a connection is a relationship that includes a link:

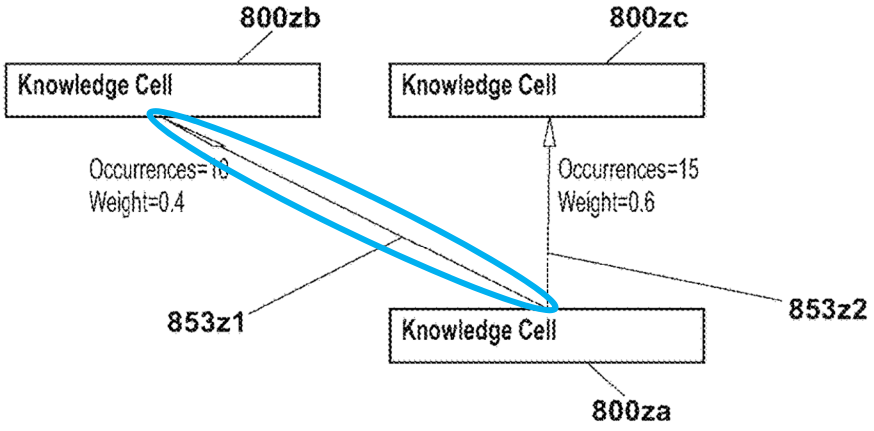

FIG. 18A

Ex. 1001, Figure 18A (annotated to show Connection 853 in blue); Ex. 2007, ¶¶60-63.

The specification further explains that, in this particular use, connections between correlations (each knowledge cell depicted in Fig. 18A includes a correlation, *see* Figs. 13-16) "may include or be associated with at least one of: an occurrence count, a weight, a parameter, or a data." Ex. 1001, 16:5-6. In addition, Figure 18A discloses "that Knowledge Cell 800za is connected to Knowledge Cell 800zb and Knowledge Cell 800zc by Connection 853zl and Connection 853z2, respectively. Each of Connection 853zl and Connection 853z2 may include or be associated with occurrence count, weight, and/or other parameter or data." *Id.*, 106:17-22. This also supports Patent Owner's construction, as the connections are relationships that include links. Ex. 2007, ¶¶56-63.

The '344 patent further provides that "[k]nowledge cells [including correlations] may be connected, interrelated, or interlinked into knowledge structures using statistical, artificial intelligence, machine learning, and/or other models or techniques." Ex. 1001, 154:10-13. In this particular use, Connections are used to indicate and track relationships including links to enable more efficient autonomous device operation. *Id.*, 106:14-65; 108:36-54. Further, connections are used to create paths through the knowledgebase for efficient storage and autonomous operation (see '344 patent Fig. 22 for example). Ex. 2007, ¶¶60-63. This disclosure confirms that, with respect to claim 7, connections are relationships that include links. Ex. 2007, ¶¶56-63.

Patent Owner's expert also confirms that connection should be construed as a "relationship that includes a link." Ex. 2007, ¶¶56-63. In addition, several dictionaries confirm that "connection" can be defined as a "relationship that includes a link." *See* Ex. 2012; Ex. 2013; Ex. 2007, ¶63.

Patent Owner's construction is confirmed by and consistent with the language of the claims and the various disclosures regarding connections throughout the specification and should be adopted. Construction of this term is appropriate because there is a dispute regarding this term, in particular with respect to Petitioner's mapping of prior art, as explained below in Section VI.

B. "means for processing" (Claim 20)

Patent Owner has disclaimed claim 20, so construction of this term is unnecessary. Ex. 2004.

VI. THE CITED REFERENCES DO NOT RENDER THE CHALLENGED CLAIMS UNPATENTABLE

The Board instituted review of the '344 patent based on Grounds 1-3. Decision, 36. In instituting review, the Board relied on the Petition and the testimony of Petitioner's declarant, Dr. Janet (Ex. 1002). For the reasons discussed below, the cited references do not render any of the Challenged Claims unpatentable. Ex. 2007, ¶¶73-158.

A. Ground 1 Fails

Regarding Ground 1, Petitioner fails to show that Grotmol anticipates claims 7, 8 and 16 of the ’344 patent. Petitioner fails to show that Grotmol discloses multiple limitations in these claims. As explained in the following sections, these limitations relate to the modifying, anticipating, executing, and performing in claim 7, the modifying and matching in claim 8, and the connections recited in claim 16. Ex. 2007, ¶¶74-100.

1. Claim 7: Grotmol Does Not Disclose the Claimed Modifying, Anticipating, Executing, and Performing

Petitioner has failed to show that Grotmol anticipates claim 7 of the ’344 patent because Grotmol fails to disclose ***modifying the instruction set*** and anticipating, executing, and performing an operation defined by the ***modified*** instruction set. Ex. 2007, ¶¶75-87. Claim 7 depends from claim 1 and requires:

> ***modifying***: ***the first one or more instruction sets for operating the first device***, or a copy of the first one or more instruction sets for operating the first device . . . ***anticipating the modified the first one or more instruction sets for operating the first device*** based on the at least partial match between the second circumstance representation and the first circumstance representation, or anticipating the modified the copy of the first one or more instruction sets for operating the first device based on the at least partial match between the second circumstance representation and the first circumstance representation . . . ***executing the modified the first one or more instruction sets*** for operating the

> first device, or executing the modified the copy of the first one or more instruction sets for operating the first device.

Ex. 1001, Claim 7. Claim 7 also requires "***performing***" ***an operation defined by the modified instruction set***. *Id.*

Grotmol only discloses correcting device behavior in certain instances and does not disclose modifying an instruction set and then anticipating a modified instruction set, executing the modified instruction set, and performing an operation defined by that modified instruction set. Ex. 2007, ¶¶77-87. Grotmol discloses that its device includes a memory that stores "training sets," which may include "an instance of the video frame, an instance of the binary signal, and an instance of a motor control indication configured to cause the robot to execute an action." Ex. 1004, 3:35-39. Petitioner points to Grotmol's disclosure that corrections produced by a trainer could be "combined with control instruction produced by the robot" as disclosing "modifying: the first one or more instruction sets." Petition, 27 (quoting Ex. 1004, 34:49-55). But Grotmol only discloses that a trainer may correct or change the operation of a robot in a "combiner" situation ***by providing additional or new instructions***, Ex. 1004, 34:49-35:34, and not that ***the instruction sets that are included with the training sets are actually modified***. Ex. 2007, ¶¶77-87. The instruction sets that correct or change the operation of the robot in Grotmol are not themselves modified, but are alternate whole unmodified instructions for operating

the robot that are executed instead of the other wholly unmodified instructions. Grotmol specifically provides that "[i]n some implementations, the trainer may utilize the joy stick forward position in order ***to override the car internal control input 20 and to cause it to proceed forward***." Ex. 1004, 35:18-21 (emphasis added). Overriding an instruction set is not modifying the instruction set. Ex. 2007, ¶¶77-79.

Petitioner also points to Grotmol's disclosure that new commands may be issued based on shifted images, Petitioner 27 (citing Ex. 1004, 42:46-43:3), but simply issuing ***new*** commands based on shifted images does not disclose modifying instruction sets. Ex. 2007, ¶¶78-79. Petitioner has not established that Grotmol discloses that the instruction sets in training sets are modified. *Id.* Further, Grotmol's disclosure of combining motor commands with the output of a PID controller to stabilize the robot does not disclose modifying instruction sets. *Id.* The motor commands, or instruction sets, in training sets are never themselves modified but instead are only combined with the output of a PID controller. *Id.* Combining two distinct elements does not mean that either element is itself modified. *Id.* Petitioner has failed to establish that the instruction sets in Grotmol's training sets are actually modified or changed.

Petitioner has also not established that Grotmol discloses "anticipating the modified the first one or more instruction sets for operating the first device based on the at least partial match between the second circumstance representation and the

first circumstance representation" or "anticipating the modified the copy of the first one or more instruction sets for operating the first device based on the at least partial match between the second circumstance representation and the first circumstance representation" as required by claim 7. Ex. 2007, ¶¶80-83. As just discussed, Grotmol does not disclose that the actual instruction sets used in the training sets are modified. *Id.* As a result, Grotmol cannot and does not disclose that a ***modified instruction set is anticipated*** as required by claim 7. Ex. 2007, ¶¶80-83.

Petitioner's sole argument that Grotmol discloses anticipating the modified instruction set is that "[a] POSITA would understand that where a partial match occurs with a stored image that is associated with an instruction, and the instruction is modified, the anticipated instruction would be the modified instruction." Petition, 28-29. This argument is not correct for several reasons. *First*, as Petitioner apparently concedes, Grotmol itself never explicitly discloses anticipating the modified instruction set. Nothing in Grotmol explicitly discloses that an instruction set correlated with an image is modified at all and then anticipated based on matching. Ex. 2007, ¶¶80-83.

Second, a POSA reading Grotmol's disclosure would not understand that a modified instruction set was anticipated based on matching. *Id.* Grotmol never discloses modifying an instruction set, as discussed above, and so a POSA would not understand that the modified instruction set would be the anticipated instruction

set. *Id.* Grotmol's disclosure that operation of a device can be effected by a trainer or using a PID controller would not lead a POSA to understand that instruction sets stored and correlated with images are modified and then anticipated based on matching images, as required by Claim 7, since the motor commands in training sets are never themselves modified but instead are only combined with the output of a PID controller, and combining elements is not modifying any of the elements. *Id.*

To the extent Petitioner is making an inherency argument in stating "[a] POSITA would understand that where a partial match occurs with a stored image that is associated with an instruction, and the instruction is modified, the anticipated instruction ***would be*** the modified instruction," Petition, 28-29 (emphasis added), Petitioner is incorrect. "Inherency . . . may not be established by probabilities or possibilities." *In re Oelrich*, 666 F.2d 578, 581 (CCPA 1981). "The mere fact that a certain thing may result from a given set of circumstances is not sufficient." *Id.* Rather, the patent challenger must "show that the natural result flowing from the operation as taught would result in the performance of the questioned function." *Id.* Here, as Dr. Saber explains, it would have been possible for the partial match to be a match involving an existing, unmodified instruction set. Ex. 2007, ¶83. To the extent Petitioner is contending that the instruction set disclosed in Grotmol must be modified, that is incorrect. *Id.*

Similarly, Petitioner's only argument that the modified instruction set in Grotmol is executed and that an operation defined by the modified instruction set is performed is that a POSITA would understand that "where the anticipated instruction is modified, the modified instruction would be executed and the first device or second device would perform the operations defined by the modified instruction set." Petition, 30. But as discussed above, Grotmol never discloses modifying an instruction set, and thus a POSA reading Grotmol's disclosure would not understand that the modified and anticipated instruction set was executed or that an operation defined by that instruction set was performed. Ex. 2007, ¶¶84-87. Nothing in Grotmol would lead a POSA to understand that ***an instruction that Grotmol fails to disclose as modified is somehow anticipated as modified, or executed as modified, and that an operation defined by that instruction set that Grotmol fails to disclose as modified would be performed***, as required by claim 7.

Petitioner's citations to its expert's declaration to support its position regarding the "anticipating," "executing" and "performing" claim limitations are unavailing. Petition, 28-29. Petitioner cites to Paragraphs 191-195 of its expert's declaration, but these paragraphs simply repeat nearly verbatim Petitioner's argument that a POSA would have known that the modified instruction set would be anticipated and executed without any explanation or support. Ex. 1002, ¶¶ 191-195. Petitioner's bare assertions regarding what a POSA would have understood are not

sufficient to carry Petitioner's burden to show that Grotmol discloses the claimed invention. *TQ Delta, LLC v. Cisco Sys., Inc.*, 942 F.3d 1352, 1358 (Fed. Cir. 2019) ("Conclusory expert testimony does not qualify as substantial evidence."). Further, a POSA would not have understood based on Grotmol's disclosure ***that the instruction set that Grotmol fails to disclose as modified would somehow be the anticipated and executed modified instruction set***, as Grotmol merely discloses changing a device's operation by ***executing alternate whole unmodified instructions*** and fails to disclose modifying, anticipating, and executing the claimed instruction sets. Ex. 2007, ¶¶78-87.

The testimony of Petitioner's expert, Dr. Janet, confirmed that the modified instruction set must be the correlated instruction set. Ex. 2008, 19:21-20:4. In addition, he could not point to a specific place in Grotmol that discloses an instruction set correlated with a circumstance representation that is modified. *Id.*, 24:6-25:9.

Dr. Janet attempted to supplement his opinions at his deposition by pointing to additional portions of Grotmol and other opinions not discussed in his declaration, but that is inappropriate particularly because the Petition does not rely on them. *See* Ex. 2008, 36:9-25, 40:7-41:24, 55:20-24.

2. Claim 8: Grotmol Does Not Disclose the Claimed Modifying and Matching

Grotmol does not disclose modifying a circumstance representation and matching using the modified circumstance representation. Ex. 2007, ¶¶88-96. Claim 8 depends from claim 3 and requires, among other things:

> ***modifying at least one of: the first circumstance representation***, a copy of the first circumstance representation, the second circumstance representation, or a copy of the second circumstance representation.

Ex. 1001, Claim 8. Claim 8 also requires "wherein the at least partial match between the second circumstance representation and the first circumstance representation includes" ***using the modified circumstance representation***. *Id.*

Grotmol only discloses simple image processing in certain instances and does not disclose modifying a circumstance representation and then matching using the modified circumstance representation. Ex. 2007, ¶¶88-96. Petitioner points to Grotmol's disclosure of applying a transformation to an image. Petition, 30 (citing Ex. 1004, 4:18-22). But this disclosure and Grotmol's disclosures cited in the Petition only provide that an instance of an image may be scaled or transformed, and not that the scaled or transformed image is used in a matching. Ex. 2007, ¶¶89-90. Claim 8 ***requires both: (i) modifying a circumstance representation, and (ii) using this modified circumstance representation used in a matching, and Grotmol fails to disclose the latter***. *Id.*

Petitioner's reliance upon the alleged understanding of a POSITA regarding this claim limitation is circular, and Petitioner has not explained how a POSITA would have understood that the ***modified circumstance representation is used in the matching process***. Ex. 2007, ¶¶91-96. Petitioner's sole argument that Grotmol discloses using the modified image in the matching process is that "[a] POSITA would understand that where either the current image or the stored image have been modified, the partial match would be determined using the modified current image (i.e., modified second circumstance representation) or the modified stored image (i.e., modified first circumstance representation). Petition, 31. This argument is incorrect for several reasons. *First*, as Petitioner appears to concede, Grotmol itself never discloses matching using the modified circumstance representation. Nothing in Grotmol discloses that an image correlated with an instruction set is modified and then used in the matching procedure. Ex. 2007, ¶¶91-96.

Petitioner's citations to its expert's declaration to support its position regarding the "modifying" and "matching" claim limitations are unavailing. Petition, 30-31. Petitioner cites to Paragraphs 196-197 of its expert's declaration, but these paragraphs ***simply repeat Petitioner's argument that a POSA would have known that a modified image could be used in a matching procedure***. Ex. 1002, ¶¶ 196-197. Petitioner's bare assertions regarding what a POSA would understand are not sufficient to carry Petitioner's burden to show that Grotmol discloses the claimed

invention. Ex. 2007, ¶¶92-96. Further, a POSA would not have understood based on Grotmol's disclosure that the modified image would be used in the matching. *Id.*

To the extent Petitioner is making an inherency argument in arguing that the modified image may be used in the matching process, Petitioner is incorrect. "Inherency . . . may not be established by probabilities or possibilities." *In re Oelrich*, 666 F.2d 578, 581 (CCPA 1981). "The mere fact that a certain thing may result from a given set of circumstances is not sufficient." *Id.* Rather, the patent challenger must "show that the natural result flowing from the operation as taught would result in the performance of the questioned function." *Id.* Here, as Dr. Saber explains, it would have been possible for the matching to be done with an unmodified image. Ex. 2007, ¶¶ 93-96. To the extent Petitioner is contending that the modified image disclosed in Grotmol must be used in the matching, that is incorrect. *Id.*

Petitioner's expert confirmed that he mapped Grotmol's disclosure "of modifying the sensory input or, in other words, modifying what the camera is picking up" to claim 8. Ex. 2008, 75:14-19. This testimony confirms that his mapping is not correct, as claim 8 requires that the correlated circumstance representation is modified.

Dr. Janet attempted to supplement his opinions regarding claim 8 at his deposition by claiming that opinions he had not explicitly disclosed were somehow still contained in his declaration, but that is inappropriate, particularly because the

Petition does not rely on them. *See* Ex. 2008, 57:21-58:12, 61:18-63:21, 63:22-64:9, 77:21-80:2, 86:7-87:2, 93:4-13. That detracts from his credibility for claim 8.

3. Claim 16: Grotmol Does Not Disclose the Claimed Connections

Grotmol fails to disclose the claimed "connections" under Patent Owner's proposed construction of "connections." Ex. 2007, ¶¶97-100. Claim 16 depends from claim 3 and requires:

> wherein the first circumstance representation correlated with the first one or more instruction sets for operating the first device include at least a portion of the first one or more object representations connected, ***using at least one or more connections***, with at least a portion of the first one or more instruction sets for operating the first device.

Ex. 1001, Claim 16.

When properly construed, each claimed connection is a relationship that includes a link. *Supra* Section V.A. Grotmol does not disclose such connections. Ex. 2007, ¶¶97-100. Grotmol's disclosure of associations between images and instruction sets fails to disclose the claimed connections under Patent Owner's construction of that claim term. *Id.*

In its institution decision, the Board indicated that the dispute over claim 16 "may involve resolving construction of the claim term 'connection.'" Decision, 33. Patent Owner now proposes a well-supported construction for the term

"connection," and Grotmol fails to disclose the claimed connections under that construction.

As discussed above, in the context of the '344 patent, including in light of the claims, specification, and drawings, a "connection" should be construed as a "relationship that includes a link." *Supra* Section V.A; Ex. 2007, ¶¶97-100. Petitioner's argument that "[a]n association between an object representation and an action is a 'connection' between the two," Petition, 39, is wrong. Ex. 2007, ¶¶98-100. For claim 3, which provides the antecedent basis for "the first one or more object representations" of claim 16, the Petition mapped an object shown within images 2000 and 2010 to the claimed "the first one or more object representations." Petition, 24. For example, the Petitioner pointed to a ball 2008 or a tree 2002 as examples of object representations. *Id.* Grotmol does not disclose a relationship ***that includes a link*** between an object (such as a ball) and a motor command. Ex. 2007, ¶¶98-100. Grotmol discloses that "an acquired ***image*** may be compared with one or more ***images*** from the training buffer" to cause a motor command to be issued. Ex. 1004, Abstract (emphasis added). By contrast, the connections disclosed in the '344 patent are relationships that include links to connect two elements. Ex. 2007, ¶¶ 99-100.

Even if Patent Owner's proposed construction is not adopted, moreover, Grotmol fails to disclose the claimed connections under that term's plain and

ordinary meaning. Ex. 2007, ¶100. There is no connection disclosed in Grotmol between at least a portion of the first one or more object representations (Grotmol's ball or tree) with at least a portion of the first one or more instruction sets (Grotmol's motor commands) for operating the first device. *Id.* An ***image is only associated with the motor control command, not connected including a specific connection, let alone connected in a relationship that includes a link***. *Id.* As a result, Grotmol fails to disclose the claimed connections under that term's plain and ordinary meaning.

B. Ground 2 Fails

Regarding Ground 2, Petitioner fails to show that Grotmol in view of the knowledge of a POSA renders claims 10 and 11 of the '344 patent obvious. Ex. 2007, ¶¶101-120. Petitioner fails to show that Grotmol discloses or suggests multiple limitations in these claims, and Petitioner's attempt to rely on the knowledge of a POSA to fill in the gaps in Grotmol's disclosure is ineffective. *Id.*

1. Claim 10: Grotmol Does Not Disclose or Suggest the Claimed Another Learning Process and Another User

Grotmol fails to disclose or suggest the claimed "third circumstance representation," "another learning process," and "another user" in claim 10. Ex. 2007, ¶¶102-112. Claim 10, which depends from claim 3, states:

> wherein the knowledgebase further includes a third circumstance representation correlated with a second one or more instruction

> sets for operating the first device, and wherein the third circumstance representation represents a third circumstance detected at least in part by the one or more sensors of the first device, and wherein at least a portion of the third circumstance representation or at least a portion of the second one or more instruction sets for operating the first device ***is learned in another learning process that includes operating the first device at least partially by another user***.

Ex. 1001, Claim 10 (emphasis added).

Grotmol fails to disclose the claimed "another user" and "another learning process." Grotmol only discloses ***one*** user operating ***one*** device in ***one*** learning process. Ex. 2007, ¶¶103-112. Grotmol fails to disclose that at least a portion of the third circumstance representation or at least a portion of the second one or more instruction sets for operating the first device is ***learned in another learning process*** that includes ***operating the first device at least partially by another user***. *Id.*

Petitioner contends with little or no support that "it would be obvious based on Grotmol in view of the knowledge of a POSITA to have a second user perform an additional training resulting in an additional correlation stored in the knowledgebase." Petition, 53-54. Petitioner is wrong and ***provides no basis for its obviousness argument***. Ex. 2007, ¶¶103-105.

The '344 patent discloses that:

> multiple operators (i.e. Users 50, etc.) may operate their Devices 98 where the Devices 98 may be configured to transmit their operations in circumstances including objects with various properties to a remote DCADO Unit 100. Such remote DCADO Unit 100 enables learning of the operators' 35 collective knowledge of operating Device 98 in circumstances including objects with various properties.

Ex. 1001, 95:38-41. Claim 10 claims another user and another learning process, and these are not taught by Grotmol. Ex. 2007, ¶¶105-107.

Petitioner contends that "Grotmol does not limit the number of users that can train the multiple behaviors for the robot, and a POSITA would have understood that different users can train different behaviors, particularly given that Grotmol describes the training of both simple and complex tasks." Petition, 53. However, the inquiry here is not whether Grotmol limits the number of users, but the number of users Grotmol actually discloses. Since Grotmol discloses ***only a single user, this single user performs the "training of both simple and complex tasks." Nothing in Grotmol suggests that one user trains the robot for simple tasks and another user trains the robot for complex tasks***. Petitioner's contention that Grotmol in view of the knowledge of POSA would teach claim 10 given that Grotmol does not even mention another user, let alone another learning process involving the another user, is an unjustified leap that goes outside of Grotmol's disclosure, and Petitioner has

not pointed to a prior art reference that actually discloses the required limitations. Ex. 2007, ¶¶104-107.

Further, as the Board noted in an IPR involving similar claim limitations in a related patent, Grotmol discloses nothing "more than loading a trained configuration from a first robot to a second robot." Ex. 2010, 35 (Institution Decision in IPR2023-01054) (Board's discussion regarding claim 4 of U.S. Patent No. 10,452,974 (Ex. 2011)). The Board also questioned whether Petitioner had sufficiently shown that "Grotmol discloses [an additional] correlation learned in another learning process by a second robot that is included as part of the knowledgebase along with the first and second correlations learned by the first robot." *Id.*, 35-36. The Board concludes correctly that Grotmol's disclosure of loading a trained configuration from a first robot to a second robot does not constitute another learning process. Ex. 2007, ¶¶105-109. Grotmol fails to disclose that a portion of an image ("third circumstance representation") or a portion of the second one or more instruction sets is learned in ***another learning process***. Ex. 2007, ¶¶107-109.

Petitioner also contends that "[i]t would have been obvious to a POSITA that different trainers could be used to train behaviors involving different levels of complexity in order to take advantage of the varying skills and knowledge of trainers." Petition, 53-54. ***But this is an unsupported assertion with no obviousness analysis provided***. Ex. 2007, ¶¶108-109. Also, since Grotmol discloses ***only a single***

user, this single user trains behaviors involving different levels of complexity. Nothing in Grotmol suggests that one user trains the robot for a task of one level of complexity and another user trains the robot for a task of another level of complexity. *Id.* Thus, given that Grotmol does not even mention another user, let alone another learning process involving the another user, Grotmol in view of the knowledge of POSITA would not disclose claim 10. *Id.*

In addition, common knowledge of a POSA may only be used to supply a missing claim limitation when that limitation is "unusually simple and the technology particularly straightforward." *Arendi S.A.R.L. v. Apple Inc.*, 832 F.3d 1355, 1361 (Fed. Cir. 2016). Petitioner has not established that the portion of the claim apparently at issue here (Petitioner has not even clearly asserted which portion of the claim it is invoking obviousness for), which involves having ***different users*** operate the same device in ***different learning processes*** to learn mixed knowledge into a single knowledgebase, satisfies those conditions. Using different users with a device in different learning processes to learn mixed knowledge into a single knowledgebase would not have been straightforward or unusually simple to a POSA ***due to the complexities of combining the mixed knowledge*** into a single knowledgebase. Ex. 2007, ¶¶109-112.

Enabling a system to learn mixed autonomous operation knowledge and integrate such knowledge into a single knowledgebase in different learning

processes with different users is an approach not disclosed or suggested in Grotmol and not obvious to a POSA. Ex. 2007, ¶¶109-112. For example, this approach may involve combining the learned knowledge into a coherent knowledge structure, identifying each user to store particular learned operations and preferences in portions of the knowledgebase for user-specific autonomous operations, combining the learned knowledge from specific users, and/or other issues not found in Grotmol and not obvious to a POSA. *Id.* Petitioner has not established that the limitations missing from Grotmol are unusually simple and the technology particularly straightforward. *See Arendi*, 832 F.3d at 1361.

At his deposition, Petitioner's expert confirmed that he and Petitioner failed to perform a proper obviousness analysis regarding claim 10 for Ground 2. Dr. Janet first attempted to deviate from his opinion expressed in his declaration that Grotmol in view of a POSA renders claim 10 obvious, by stating in his deposition response that Grotmol alone anticipates claim 10. Ex. 2008, 94:20-97:20, 98:16-23. He did not include such opinions in his declaration and the Petition does not rely on them.

Dr. Janet stated that he does not believe Grotmol lacks disclosure of any limitations of claim 10. *Id.*, 98:16-23. This testimony confirms that Petitioner and Dr. Janet have failed to perform a proper obviousness analysis, which requires, *inter alia*, ascertaining the "differences between the prior art and the claims at issue." *Graham v. John Deere Co. of Kansas City*, 383 U.S. 1, 17-18 (1966). If Grotmol

alone discloses all the features of claim 10 as Dr. Janet contends according to his deposition testimony, then the Petition (relying on his declaration) cannot possibly have established a rationale for modifying or configuring Grotmol's process in view of the knowledge of a POSA to arrive at the claimed invention, much less any reasonable expectation of success regarding such a modification/configuration.

2. Claim 11: Grotmol Does Not Disclose or Suggest the Claimed Third Circumstance Representation, Another Learning Process, and Third Device

Claim 11 depends from claim 3 and requires, among other things:

> wherein the knowledgebase further includes a third circumstance representation correlated with a second one or more ***instruction sets for operating a third device***, and wherein the third circumstance representation represents a third circumstance ***detected at least in part by one or more sensors of the third device***, and wherein at least a portion of the third circumstance representation or at least a portion of the second one or ***more instruction sets for operating the third device*** is learned ***in another learning process*** that includes operating ***the third device*** at least partially by: the user, or another user.

Ex. 1001, Claim 11 (emphasis added).

As discussed above with respect to claim 10, Grotmol only discloses ***one*** user operating ***one*** device in ***one*** learning process. Ex. 2007, ¶¶114-120. The knowledge gained from this process in Grotmol, when loaded into another device (recited as a third device in claim 11), ***is still knowledge of one user operating one device in one***

learning process, which is about loading the previously learned knowledge on one robot into another robot and not what claim 11 requires: a third circumstance representation correlated with a second one or more ***instruction sets for operating a third device***, and wherein the third circumstance representation represents a third circumstance ***detected at least in part by one or more sensors of the third device***, and wherein at least a portion of the third circumstance representation or at least a portion of the second one or more ***instruction sets for operating the third device*** is learned ***in another learning process*** that includes ***operating the third device***. *Id.*

Grotmol first fails to disclose a third circumstance representation correlated with a second one or more ***instruction sets for operating a third device***. *Id.* As discussed above, Grotmol discloses one user operating one device in one learning process and even when loaded into a second device, this is still knowledge of ***one user operating one device in one learning process*** that does not disclose a correlation that includes instruction sets for operating a third device. *Id.*

Grotmol next fails to disclose that ***the third circumstance representation represents a third circumstance detected at least in part by one or more sensors of the third device***. *Id.* Nothing in Grotmol even suggests detecting a circumstance with a sensor of a third device since Grotmol focuses on learning and autonomous operation of a single robot. *Id.*

Grotmol also fails to disclose that ". . . ***instruction sets for operating the third device*** is ***learned in another learning process*** that includes ***operating the third device*** . . . ." Petitioner contends with little or no support that "multiple learning processes" would be obvious. Petition, 54-55. Petitioner is wrong and ***provides no basis for its obviousness argument***.

The '344 patent discloses that:

> multiple operators (i.e. Users 50, etc.) may operate their Devices 98 where the Devices 98 may be configured to transmit their operations in circumstances including objects with various properties to a remote DCADO Unit 100. Such remote DCADO Unit 100 enables learning of the operators' 35 collective knowledge of operating Device 98 in circumstances including objects with various properties.

Ex. 1001, 95:38-41. Claim 11 claims another learning process, and this is not taught by Grotmol. Ex. 2007, ¶¶115-120.

Petitioner refers to the knowledge of a POSA as providing the claimed additional learning process. Petition, 54-55. But Petitioner's statements ***lack explanation or support***. Ex. 2007, ¶¶114-120. Further, as the Board noted in an IPR involving similar claim limitations in a related patent, Grotmol discloses nothing "more than loading a trained configuration from a first robot to a second robot." Ex. 2010, 35 (Institution Decision in IPR2023-01054) (Board's discussion regarding claim 4 of U.S. Patent No. 10,452,974 (Ex. 2011)). The Board also questioned

whether Petitioner had sufficiently shown that "Grotmol discloses [an additional] correlation learned in another learning process by a second robot that is included as part of the knowledgebase along with the first and second correlations learned by the first robot." *Id.*, 35-36. The Board concludes correctly that ***loading a trained configuration from a first robot to a second robot does not constitute a second learning process***, as claimed in claim 11. Ex. 2007, ¶¶117-120.

Petitioner contends that "it would be obvious to a POSITA that the training process involving operation of the first robot (resulting in the first trained configuration), and the training process involving operation of the different robot (resulting in another trained configuration) could be done by different users." Petition, 54-55. However, the inquiry here is not whether different users ***could or could not*** operate different robots, but ***the single user and single robot that Grotmol actually discloses***. Petitioner's argument is Petitioner's own words not supported in Grotmol and is conclusory. Petitioner is wrong since this argument describes a situation involving ***two trained configurations*** each stored and learned on a different robot, whereas claim 11 specifically recites a ***single knowledgebase*** that includes ***mixed knowledge*** of one correlation learned in one learning process involving one device and an ***additional correlation learned in another learning process involving a third device***. Ex. 2007, ¶¶117-120.

In addition, common knowledge of a POSA may only be used to supply a missing claim limitation when that limitation is "unusually simple and the technology particularly straightforward." *Arendi*, 832 F.3d at 1361. Petitioner has not established that the limitation at issue here satisfies those conditions. Using different learning processes to learn mixed knowledge into a single knowledgebase would not have been straightforward or unusually simple to a POSA due to the complexities of combining the mixed knowledge involving different devices into a single knowledgebase. Ex. 2007, ¶¶118-120.

Enabling a system to learn mixed autonomous operation knowledge from different learning processes involving different devices and integrate such knowledge into a single knowledgebase is an approach not disclosed or suggested in Grotmol and not obvious to a POSA. Ex. 2007, ¶¶119-120. For example, this approach may involve combining the learned knowledge into a coherent knowledge structure, combining the learned knowledge from the different learning processes, combining the learned knowledge from the different devices, and/or other issues not found in Grotmol and not obvious to a POSA. *Id.* Petitioner has not established that the limitations missing from Grotmol are unusually simple and the technology particularly straightforward. *See Arendi*, 832 F.3d at 1361.

The deposition testimony of Petitioner's expert confirms that he and Petitioner failed to perform a proper obviousness analysis regarding claim 11 for Ground 2.

Dr. Janet first attempted to deviate from his opinion expressed in his declaration that Grotmol in view of a POSA renders claim 11 obvious, by stating in his deposition response that Grotmol alone anticipates claim 11. Ex. 2008, 99:11-101:17; 110:2-111:9. Dr. Janet stated that he does not believe Grotmol lacks disclosure of any limitations of claim 11. *Id.*, 100:17-22. This testimony confirms that Petitioner and Dr. Janet have failed to perform a proper obviousness analysis including for the reasons discussed above with respect to Dr. Janet's analysis of claim 10 and Ground 2.

Dr. Janet's shifting opinions undermine his credibility. *Id.*, 99:18-106:7. And he agreed that he expressed opinions at his deposition that were not included in his declaration. *Id.*, 104:16-105:5. At one point in his deposition, Dr. Janet also sought to identify specific language in claims 10 and 11 that Grotmol failed to disclose, but he never specifically identified this language in his declaration. *Id.*, 106:8-109:4. Further, Dr. Janet admitted that there was a "potential error" or "potential omission" in his declaration regarding his analysis. *Id.*, 110:9-111:9, 112:9-114:21. All of this testimony undermines Dr. Janet's credibility regarding claim 11.

C. Ground 3 Fails

Regarding Ground 3, Petitioner fails to show that Grotmol in view of Hickman renders claims 6, 11, and 12 obvious. Ex. 2007, ¶¶121-158. Petitioner has failed to show that Grotmol's training sets and Hickman's shared robot knowledgebase would

have been predictably combined by a POSA to arrive at the claimed inventions, as explained below.

First, combining Hickman's shared knowledgebase with Grotmol's training sets would not have been predictable or obvious because Hickman specifically teaches away from using the claimed circumstance representations and correlations (as recited in claims 6, 11 and 12 and shown below). Ex. 2007, ¶¶121-123. Hickman discloses storing instruction sets and images ***separately in separate knowledgebases*** (images in Unique Object Knowledge Base 307 and instructions in Task Knowledge Base 309, *see* Ex. 1005, Fig. 3), which a POSA would have found to be incompatible with Grotmol's disclosure of training sets or correlations with images and instruction sets correlated and stored ***together***. Ex. 2007, ¶¶121-123. Further, Hickman teaches away from the claimed "circumstance representations" because Hickman focuses on manipulating a single object and single object information and such information is not a circumstance representation. Ex. 2007, ¶¶121-123. In addition, instances of single object information (where each row of the Unique Object Knowledge Base 307 disclosed in Hickman is single object information) are learned from separate circumstances, further confirming that single object information is not a circumstance representation.

Second, Petitioner has not adequately explained how the correlations and circumstance representations allegedly disclosed by Grotmol would have been

combined with the knowledgebase in Hickman to arrive at the claimed invention of these claims. Ex. 2007, ¶¶123-124. Since circumstance representations and correlations of circumstance representations and instruction sets are fundamental to the operation of the system in Grotmol, ***Hickman must disclose the circumstance representations and correlations in order to be combinable with Grotmol at all***. *Id.* However, Hickman teaches away from the correlations in Grotmol by disclosing images and instructions in separate knowledgebases that are not correlated. Ex. 2007, ¶¶123-124. Petitioner is using improper hindsight analysis and speculation to pick and choose high level concepts from each reference without sufficiently mapping each reference to each claim element to arrive at the claimed invention and explaining why a POSA would have found the combination of these references to be predictable and operable with a reasonable expectation of success. *Id.*

Third, Petitioner fails to show that Grotmol in view of Hickman discloses or suggests the specifically claimed elements of each of these claims. Ex. 2007, ¶¶125-127. It is not adequate to merely show that Grotmol and Hickman disclose high level concepts without mapping the disclosure of the references to the specific language of the claims. Both Grotmol and Hickman fail to disclose "wherein ***the second device receives from the server*** . . . the first circumstance representation, or the first one or more ***instruction sets for operating the first device***," and "wherein the second

device autonomously performs the one or more operations defined by the first one or more ***instruction sets for operating the first device***," as required by claim 6.

Further, Grotmol and Hickman fail to disclose "***a third circumstance representation correlated with a second one or more instruction sets for operating a third device***, and wherein the ***third circumstance representation represents a third circumstance detected at least in part by one or more sensors of the third device***," and "wherein at least a portion of the ***third circumstance representation*** or at least a portion of the second one or more ***instruction sets for operating the third device*** is ***learned in another learning process***," as required by claim 11.

The Grotmol and Hickman combination also fails to disclose a "***third circumstance representation correlated with a second one or more instruction sets for operating a third device***," "wherein ***the third circumstance representation represents a third circumstance detected at least in part by one or more sensors of the third device***," "generating or receiving ***a fourth circumstance representation***, wherein the fourth circumstance representation represents a fourth circumstance ***detected at least in part by one or more sensors of a fourth devic***e," "***anticipating the second one or more instruction sets for operating the third device based on at least partial match between the fourth circumstance representation and the third circumstance representation***," and "wherein the fourth device autonomously

performs one or more operations defined by ***the second one or more instruction sets for operating the third device***," as required by claim 12.

1. Claims 6, 11 and 12: It Would Not Have Been Obvious to Combine Grotmol and Hickman to Arrive At the Claimed Inventions

Petitioner's argument that it would have been obvious to combine Grotmol's training sets with Hickman's simplistic cloud storage approach uses impermissible hindsight to arrive at the claimed invention. Ex. 2007, ¶¶128-130. The specific language of claims 6, 11 and 12 cannot be carved up and then stitched back together using the broad concepts disclosed in Grotmol and Hickman. Grotmol discloses one user operating one device in one learning process. *Id.* The knowledge gained from this process in Grotmol, when loaded into a second device, is still knowledge of ***one user operating one device in one learning process***. *Id.* Further, Hickman's simple cloud storage of instances of single object information does not contemplate using correlations, circumstance representations, and other data structures to learn knowledge for autonomous operation as required by claims 6, 11 and 12. Petitioner's obviousness analysis is also deficient because it ***fails to explain what specific claim limitation is missing from Grotmol and how Hickman discloses the missing claim limitation***. "The burden is on Petitioner, not the Board, to specify with particularity how [the prior art] teaches [various claimed features]." *Amazon Web Services, Inc.*

v. Saint Regis Mohawk Tribe, IPR2019-00103, Paper No. 22 at 17 (PTAB May 10, 2019).

Petitioner's use of impermissible hindsight to arrive at the claimed invention is highlighted in its statement that "it would have been obvious to combine Hickman's shared robot knowledge base with Grotmol's autonomous robot system such that the shared knowledgebase includes the training of multiple robots by multiple users." Petition, 62. Petitioner is using the claimed use of correlations, multiple users, and multiple devices as a roadmap for its obviousness combination. Ex. 2007, ¶¶128-130. This is impermissible hindsight, as neither Grotmol nor Hickman, alone or in combination, discloses or suggests the claimed inventions. *See TQ Delta, LLC*, 942 F.3d 1352 at 1361 (warning against "us[ing] the challenged patent as a roadmap to reconstruct the claimed invention using disparate elements from the prior art"). And it would not have been obvious to one skilled in the art to use Hickman's simple cloud storage method disclosing no circumstance representations and correlations with Grotmol's single-device training sets to arrive at the claimed inventions. Ex. 2007, ¶¶129-130.

Petitioner's proposed combination would also not have been obvious because Hickman teaches away from the claimed invention. Ex. 2007, ¶¶129-130. Specifically, as shown in Figure 3 from Hickman below, Hickman teaches that images are stored in one knowledgebase 307 while instruction sets are stored

separately (i.e. uncorrelated) in another knowledgebase 309. Ex. 1005, 13:64-21:39. In light of this storage structure, and that Grotmol allegedly discloses that training sets stored in memory include ***correlated*** images and instruction sets that are stored ***together***, Ex. 1004, 3:35-49, a POSA would have found that Hickman teaches away from Grotmol's approach, and a POSA would not have been motivated to combine Grotmol and Hickman in the manner proposed by Petitioner. Ex. 2007, ¶¶129-130. Further, Hickman also teaches away from circumstance representations since a single object information stored in each row of Unique Object Knowledge Base 307 in Hickman is not a circumstance representation. Ex. 2007, ¶¶129-130.

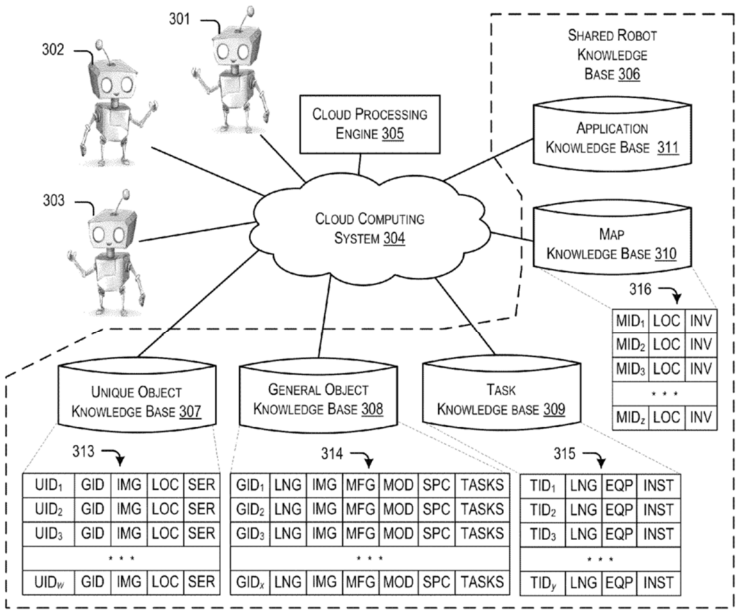

FIGURE 3

Ex. 1005, Fig. 3.

Petitioner has also failed to carry its burden to prove obviousness by showing which specific claim elements are disclosed by each of the cited references. ***The Petition must provide an understandable explanation of the element-by-element specifics of the patentability challenges***. *See* 35 U.S.C. § 312(a)(3); 37 C.F.R. §§ 42.22(a)(2), 42.104(b)(3)-(4). The Petitioner has failed to provide the required explanation and thus the Petition should be rejected.

2. Claim 6: Grotmol and Hickman Do Not Disclose or Suggest the Claimed Second Device

Claim 6 depends from claim 3 and requires, among other things:

> a server that receives from the first device at least one of: the first circumstance representation, or the first one or more instruction sets for operating the first device, and wherein ***the second device receives from the server*** at least one of: the first circumstance representation, or the first one or more ***instruction sets for operating the first device*** and wherein ***the second device autonomously performs*** the one or more operations defined by the first one or more ***instruction sets for operating the first device.***

Ex. 1001, Claim 6 (emphasis added).

Hickman's failure to disclose and teaching away from fundamental elements including the claimed "circumstance representation" as well as a correlation of the claimed circumstance representation with the claimed instruction set as discussed

above confirms that Hickman cannot be used to provide any missing elements from Grotmol. Ex. 2007, ¶¶131-136.

Petitioner's attempt to stitch together high level concepts from Grotmol and Hickman to arrive at the claimed invention is improper and fails to adequately and properly explain how each specifically claimed element of claim 6 is disclosed by either reference. *Id.* Petitioner's claim that Grotmol's training sets could be combined with Hickman to arrive at the claimed invention is not correct. Petition, 58-61. The claimed second device must receive from the server either the first circumstance representation or the first one or more instruction sets, and the second device must perform operations defined by the instruction set for operating the first device. Ex. 2007, ¶¶132-136. The simple knowledgebase in Hickman never mentions, let alone discloses, anything like the concept of a ***correlation with an instruction set for operating a second device*** or the other specifically claimed elements of the correlation. *Id.*

While the Petition is unclear, if Petitioner relies on Hickman to teach the use of a shared knowledgebase with learned multiple behaviors from multiple robots and on Grotmol to disclose circumstance representations correlated with the various instruction sets, then this combination of high level concepts fails to disclose the invention as claimed. Ex. 2007, ¶¶ 133-136. Claim 6 encompasses more than simply the combination of an additional correlation for a second device in a shared

knowledgebase. *Id.* The specific limitations of claim 6 provide that ***the second device must receive*** the first circumstance representation or first instruction set for the first device and then ***perform operations defined by that instruction set***. *Id.* This requires a sophisticated approach where knowledge is stored and processed using ***instruction sets correlated with a circumstance representation in a specific manner and ultimately transferred from one device to be used on another device***. *Id.* While Hickman discloses additional devices performing certain functions and Grotmol discloses training sets, neither reference discloses the specifically claimed devices operating using correlations in the claimed manner. *Id.*

Although Hickman discloses a cloud system that can generally learn from multiple devices, it does not disclose the claimed circumstance representation used with instruction sets in the claimed manner involving the second device. *Id.* Hickman fails to disclose any circumstance representations at all and teaches away from circumstance representations, as the objects in Hickman do not represent a circumstance and are not included in a circumstance representation but in Unique Object Knowledgebase 307 as shown in Figure 3 of Hickman. *Id.* As a result, neither Hickman nor Grotmol disclose or suggest the features of claim 6.

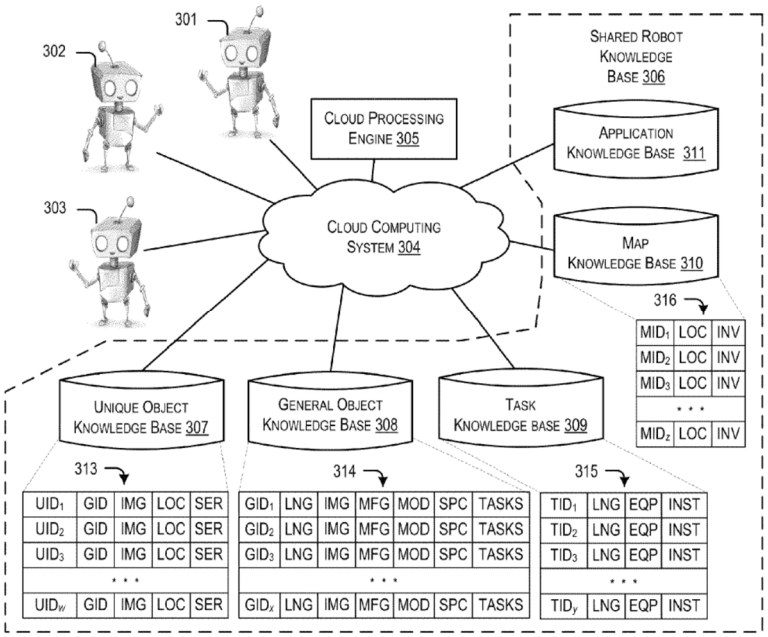

FIGURE 3

Ex. 1005, Figure 3.

At his deposition, Petitioner's expert confirmed that he and Petitioner failed to perform a proper obviousness analysis regarding claim 6 for Ground 3. Dr. Janet first attempted to deviate from his opinion expressed in his declaration that Grotmol in view of a POSA renders claim 6 obvious, by stating in his deposition response that Grotmol alone anticipates claim 6. Ex. 2008, 124:15-126:15. Dr. Janet stated that he does not believe Grotmol lacks disclosure of any limitations of claim 6. *Id.*; *see also id.*, 133:8-136:15, 140:16-142:22, 144:14-145:8. And he admitted that his analysis regarding claim 6 omitted anticipation analysis. *Id.*, 131:2-6.

3. Claim 11: Grotmol and Hickman Do Not Disclose or Suggest a Correlation Including the Claimed Third Circumstance Representation Detected by a Third Device and Another Learning Process Involving the Third Device

Claim 11 depends from claim 3 and requires, among other things:

> wherein the knowledgebase further includes ***a third circumstance representation correlated with a second one or more instruction sets for operating a third device***, and ***wherein the third circumstance representation represents a third circumstance detected at least in part by one or more sensors of the third device***, and wherein at least a portion of the third circumstance representation or at least a portion of the second one or more instruction sets for operating the third device is learned ***in another learning process*** that includes operating ***the third device*** at least partially by: the user, or another user.

Ex. 1001, Claim 11 (emphasis added).

Hickman's failure to disclose and teaching away from fundamental elements including the claimed circumstance representation as well as a correlation of the claimed circumstance representation with the claimed instruction set as discussed above confirms that Hickman cannot be used to provide any missing elements in Grotmol. Ex. 2007, ¶¶ 137-145.

In addition, Grotmol and Hickman fail to disclose ***a third circumstance representation correlated with a second one or more instruction sets for operating a third device***. Ex. 2007, ¶¶139-145. As discussed above with respect to claim 11 in Ground 2, Grotmol discloses one user operating one device in one learning process

and even when loaded into a second device, this is still knowledge of one user operating one device in one learning process that does not disclose a correlation that includes instruction sets for operating a third device. *Id.* On the other hand, Hickman discloses storing images and instructions ***separately in separate knowledgebases*** (*see* Ex. 1005, Fig. 3) that is not a correlation as well as single object information that is not a circumstance representation. *Id.* Hence, Hickman does not disclose or suggest (and further teaches away from) ***any*** correlations including ***any*** circumstance representations correlated with ***any*** instruction sets, let alone the claimed third circumstance representation correlated with a second one or more instruction sets for operating a third device. *Id.*

Grotmol and Hickman next fail to disclose that ***the third circumstance representation represents a third circumstance detected at least in part by one or more sensors of the third device***. Ex. 2007, ¶¶140-145. Petitioner argues that Grotmol discloses a circumstance detected by the sensor of another robot correlated with instructions for operating that robot. Petition, 61. But Grotmol discloses one user operating one device in one learning process and even when loaded into a second device, this is still knowledge of ***one user operating one device in one learning process*** that does not disclose ***detecting a circumstance with a sensor of a third device***. *Id.* On the other hand, Hickman discloses ***single object information that is not a circumstance representation***. Ex. 2007, ¶¶140-145. Hence, Hickman

does not disclose or suggest (and further teaches away from) ***any*** circumstance representations, let alone the claimed ***third circumstance representation that includes a third circumstance detected at least in part by one or more sensors of the third device***. *Id.*

Grotmol and Hickman also fail to disclose that ***at least a portion of the third circumstance representation or at least a portion of the second one or more instruction sets for operating the third device is learned in another learning process that includes operating the third device*** Ex. 2007, ¶¶141-145. Grotmol discloses ***one user operating one device in one learning process*** and even when loaded into a second device, this is still knowledge of one user operating one device in one learning process that does not disclose the claimed ***another learning process involving operating a third device and instruction sets of the third device***. *Id.* On the other hand, although Hickman discloses a cloud system that can generally learn from multiple devices, Hickman still discloses only ***single object information that is not a circumstance representation***. *Id.* Hence, Hickman does not disclose or suggest (and further teaches away from) ***any*** circumstance representations, let alone the claimed third circumstance representation, and let alone that ***it is specifically learned in another learning process that includes operating the third device***. *Id.*

Petitioner cannot simply pick and choose high level concepts from Grotmol and Hickman to read on the claimed invention. This approach is improper and fails

to adequately and properly explain how each specifically claimed element of claim 11 is disclosed by either reference. Petitioner's claim that Grotmol's training sets could be combined with Hickman to arrive at the claimed correlation including the third circumstance representation and instruction sets is not correct. Petition, 61-63. As the Board noted in an IPR involving similar claim limitations in a related patent, Grotmol discloses nothing "more than loading a trained configuration from a first robot to a second robot." Ex. 2010, 35 (Institution Decision in IPR2023-01054) (Board's discussion regarding claim 4 of U.S. Patent No. 10,452,974 (Ex. 2011)). And the knowledgebase in Hickman never mentions, let alone discloses (and further teaches away from), anything like the concept of a correlation with an instruction set for operating a third device and the other specifically claimed elements of the correlation. Ex. 2007, ¶¶ 142-145.

Claim 11 involves more than simply the combination of an additional correlation in a shared knowledgebase. *Id.* The specific limitations of claim 11 provide that ***the correlation must include one or more instruction sets*** specifically "***for operating the third device***," a "***third circumstance representation***" that represents "***a third circumstance detected at least in part by the one or more sensors of the third device***," and that must be "***learned in another learning process***" that involves operating the third device. The claim requires instruction sets for operating a third device, a circumstance detected by that third device, and another learning

process involving operating the third device. *Id.* While Hickman generally discloses additional devices performing certain functions and Grotmol discloses training sets, neither reference discloses any of these specifically claimed limitations. *Id.*

Hickman provides a simple method for storing and sharing single object information (not circumstance representations). Ex. 1005, Abstract. As shown in Figure 4 from Hickman, robot 404 may obtain single object information via one or more sensors. *Id.*, 25:14-19. Hickman fails to disclose (and teaches away from) circumstance representations at all, as ***the single objects in Hickman do not represent a circumstance and are not included in a circumstance representation but in separate single object rows*** (each row including single object information learned from a separate circumstance) of the Unique Object Knowledgebase 307 as shown in Figure 3 of Hickman. Ex. 2007, ¶¶144-145. Given that Hickman fails to disclose circumstance representations, Hickman ***must fail to disclose a correlation of a circumstance representation and instruction set***. *Id.* As a result, neither Hickman nor Grotmol disclose or suggest the features of claim 11.

Petitioner has failed to carry its burden to show which specific claim elements are disclosed by which prior art reference. Petitioner's argument that Hickman's general disclosure of the storage of "robot experiences" reads on the claimed invention is not persuasive and oversimplifies the claimed invention. Petition, 62. Petitioner does not specifically map the claim language of claim 11 to the disclosures

of Hickman and merely points to the high level concept of information storage. Ex. 2007, ¶¶144-145. Claim 11 *requires* ***a third circumstance representation correlated with a second one or more instruction sets specifically for operating a third device***, where ***the third circumstance representation represents a third circumstance specifically detected at least in part by one or more sensors of the third device*** and at least a portion of the third circumstance representation and at least a portion the ***one or more instruction sets for operating the third device*** must be ***learned specifically in another learning process*** that includes ***specifically operating the third device***. The language of the claim, and not Petitioner's summary distillation of the claim language and the disclosure of certain references, governs. Grotmol's and Hickman's lack of disclosure, Hickman's teaching away, and Petitioner's failure to explain which reference discloses which specific claim elements dooms Petitioner's argument. Ex. 2007, ¶¶137-145.

The deposition testimony of Petitioner's expert confirms that he and Petitioner failed to perform a proper obviousness analysis regarding claim 11 for Ground 3. Dr. Janet attempted to deviate from his opinion expressed in his declaration that Grotmol in view of Hickman renders claim 11 obvious, by indicating in his deposition response that Grotmol anticipates claim 11 and Hickman also anticipates claim 11. Ex. 2008, 162:4-12, 150:5-11. By failing to identify any gaps in Grotmol's or Hickman's disclosure with respect to the claimed features and then addressing

how/why it would have been obvious to a POSA to implement those features, Petitioner and Dr. Janet have failed to provide a legally proper obviousness analysis.

4. Claim 12: Grotmol and Hickman Do Not Disclose or Suggest the Claimed Correlation Including the Claimed Third Circumstance Representation Detected by a Third Device, Fourth Circumstance Representation Detected by a Fourth Device, and Anticipating Based on These Circumstance Representations

Claim 12 depends from claim 3 and requires, among other things:

> wherein the knowledgebase further includes a ***third circumstance representation correlated with a second one or more instruction sets for operating a third device***, and wherein ***the third circumstance representation represents a third circumstance detected at least in part by one or more sensors of the third device***, and wherein the one or more processors are further configured to perform at least:
>
> generating or receiving a fourth circumstance representation, wherein ***the fourth circumstance representation represents a fourth circumstance detected at least in part by one or more sensors of a fourth device***;
>
> anticipating the second one or more instruction sets ***for operating the third device based on at least partial match between the fourth circumstance representation and the third circumstance representation***; and
>
> at least in response to the anticipating the second one or more instruction sets for operating the third device, executing the second one or more ***instruction sets for operating the third device***, wherein ***the fourth device autonomously performs*** one or more operations defined

> by the second one or more ***instruction sets for operating the third device***.

Ex. 1001, Claim 12 (emphasis added).

Hickman's failure to disclose and teaching away from fundamental elements including the claimed circumstance representation as well as a correlation of the claimed circumstance representation with the claimed instruction set as discussed above confirms that Hickman cannot be used to provide any missing elements from Grotmol. Ex. 2007, ¶¶147-158.

In addition, Grotmol and Hickman first fail to disclose ***a third circumstance representation correlated with a second one or more instruction sets for operating a third device***. Ex. 2007, ¶¶148-158. As discussed above with respect to claim 11 in Ground 2 and claim 11 in Ground 3, Grotmol discloses ***one user operating one device in one learning process*** and even when loaded into a second device, this is still knowledge of ***one user operating one device in one learning process*** that does not disclose ***a correlation that includes instruction sets for operating a third device***. *Id.* On the other hand, Hickman discloses storing images and instructions ***separately in separate knowledgebases*** (*see* Ex. 1005, Fig. 3) that ***is not a correlation*** as well as ***single object information*** that is ***not a circumstance representation***. Hence, Hickman does not disclose or suggest (and further teaches away from) ***any*** correlations including ***any*** circumstance representations correlated with ***any***

instruction sets, let alone the claimed ***third circumstance representation correlated with a second one or more instruction sets for operating a third device***. *Id.*

Grotmol and Hickman next fail to disclose that ***the third circumstance representation represents a third circumstance detected at least in part by one or more sensors of the third device***. Ex. 2007, ¶¶149-158. Petitioner argues that Grotmol discloses a circumstance detected by the sensor of another robot correlated with instructions for operating that robot. Petition, 63-65. But Grotmol discloses one user operating one device in one learning process and even when loaded into a second device, this is still knowledge of ***one user operating one device in one learning process*** that does not disclose ***detecting a circumstance with a sensor of a third device***. *Id.* On the other hand, Hickman discloses ***a single object information*** that ***is not a circumstance representation***. Hence, Hickman does not disclose or suggest (and further teaches away from) ***any circumstance representations***, let alone the claimed ***third circumstance representation represents a third circumstance detected at least in part by one or more sensors of the third device***. *Id.*

Given that Grotmol and Hickman fail to disclose the ***third circumstance representation correlated with a second one or more instruction sets for operating a third device*** as discussed right above, Grotmol and Hickman especially fail to disclose ***the fourth circumstance representation represents a fourth circumstance***

detected at least in part by one or more sensors of a fourth device for similar reasons and because it requires an additional fourth device. Ex. 2007, ¶¶150-158.

Next, Grotmol and Hickman fail to disclose anticipating the second one or more instruction sets ***for operating the third device based on at least partial match between the fourth circumstance representation and the third circumstance representation***. Ex. 2007, ¶¶151-158. Petitioner argues that Grotmol discloses anticipating instructions for a third device using a partial match and that a fourth device performs an operation defined by the instruction set for the third device. Petition, 65. This argument is Petitioner's own words not supported in Grotmol and is conclusory. Grotmol discloses one user operating one device in one learning process and even when loaded into a second device, this is still knowledge of ***one user operating one device in one learning process*** that does not disclose ***anticipating instruction sets for operating a third device***. Ex. 2007, ¶¶151-158. On the other hand, Hickman discloses ***a single object information that is not a circumstance representation***. Hence, Hickman does not disclose or suggest (and further teaches away from) ***any circumstance representations***, let alone the claimed ***fourth circumstance representation and the third circumstance representation used in the matching for the anticipation***. Ex. 2007, ¶¶151-158.

Finally, Grotmol and Hickman fail to disclose that in response to the anticipating, executing the second one or more ***instruction sets for operating the***

third device, wherein ***the fourth device autonomously performs*** one or more operations defined by the second one or more ***instruction sets for operating the third device***. Ex. 2007, ¶¶152-158. Given that Grotmol and Hickman fail to disclose ***the anticipating of instruction sets as particularly claimed***, they must also fail to disclose the claimed ***execution of the anticipated instruction sets and performance of operations defined by those anticipated instruction sets***. *Id.* Also, regardless of the anticipation, Grotmol and Hickman do not teach the particular claimed limitations involving ***instruction sets for operating the specific third device and that the specific fourth device autonomously performs operations defined by the instruction sets for operating the specific third device.*** *Id.*

Petitioner's discussion of high level concepts from Grotmol and Hickman again fails to adequately and properly explain how each specifically claimed element of claim 12 is disclosed by either reference. Petitioner's claim that Grotmol's training sets could be combined with Hickman to arrive at the claimed correlated third circumstance representation is not correct. Petition, 61-65. And the simple knowledgebase in Hickman never mentions, let alone discloses, anything like the concept of a correlation with an instruction set for operating a third device and the other specifically claimed elements of the additional correlations. Ex. 2007, ¶¶ 153-158.

If Petitioner relies on Hickman to teach the use of a shared knowledgebase with learned multiple behaviors from multiple robots and on Grotmol to disclose circumstance representations correlated with the various instruction sets, then this combination of high level concepts fails to disclose the invention as claimed. Ex. 2007, ¶¶154-158. Claim 12 includes more than simply the combination of an additional correlation in a shared knowledgebase. *Id.* The specific limitations of claim 12 provide that ***the correlation must include one or more instruction sets specifically "for operating the third device,"*** and a ***"third circumstance representation" must represent "a third circumstance [specifically] detected at least in part by the one or more sensors of the third device,"*** the system must generate or receive an additional ***"fourth circumstance representation" that represents "a fourth circumstance [specifically] detected at least in part by the one or more sensors of the fourth device,"*** and the system must anticipate "***instruction sets [specifically] for operating the third device based on at least partial match between the fourth circumstance representation and the third circumstance representation," and executing these anticipated "instruction sets [specifically] for operating the third device," and performing operations specifically by the "fourth device" that are*** defined by the anticipated "***instruction sets [specifically] for operating the third device***." While Hickman generally discloses additional devices performing certain functions and Grotmol discloses training sets, neither reference

discloses the specifically claimed devices operating using correlations in the claimed manner. *Id.*

As discussed above, Hickman provides a basic method for storing and sharing ***single object information***. Ex. 1005, Abstract. Hickman fails to disclose (and teaches away from) circumstance representations at all, as ***the single objects in Hickman do not represent a circumstance and are not included in a circumstance representation but in separate single object rows*** (each row including a single object information learned from separate circumstances) of the Unique Object Knowledgebase 307 as shown in Figure 3 of Hickman. Ex. 2007, ¶¶ 155-158.

Petitioner's statement that "Grotmol and Hickman further disclose that the knowledgebase can be shared to perform autonomous operation of any number of other devices," Petition, 64, highlights ***Petitioner's failure to map specific disclosures of the references to the actual language of claim 12***. Ex. 2007, ¶¶ 157-158. Petitioner does not explain how the references disclose the sharing of the knowledgebase or how this sharing reads on the specific elements as claimed. Petitioner's statement that "the combination discloses the knowledgebase includes multiple circumstance representations correlated with instructions each learned during a training process involving different robots (i.e., claimed first and third circumstance representations detected during learning processes involved first and third device), and then sharing that knowledgebase to perform autonomous operation

of multiple other robots (i.e., claimed second and fourth devices)," Petition, 65, is Petitioner's own words not disclosed in the references, is conclusory, and also fails to map the disclosure of the references to the specifically claimed elements. Ex. 2007, ¶¶154-158.

Petitioner has failed to carry its burden to show which specific claim elements are disclosed by which prior art reference. Petitioner's argument that Hickman's general disclosure of the storage of "robot experiences" reads on the claimed invention is not persuasive and oversimplifies the claimed invention. Petitioner does not specifically map the claim language of claim 12 to the disclosures of Hickman and merely points to the high level concept of information storage. Claim 12 *requires* ***a third circumstance representation correlated with a second one or more instruction sets [specifically] for operating a third device***, where ***the third circumstance representation represents a third circumstance [specifically] detected at least in part by one or more sensors of the third device, and*** generating or receiving an additional ***"fourth circumstance representation" that represents "a fourth circumstance [specifically] detected at least in part by the one or more sensors of the fourth device,"*** and anticipating "***instruction sets [specifically] for operating the third device based on at least partial match between the fourth circumstance representation and the third circumstance representation," and executing these anticipated "instruction sets [specifically] for operating the third***

device," and performing operations specifically by the "fourth device" that are defined by the anticipated "***instruction sets [specifically] for operating the third device***. The language of the claim, and not Petitioner's summary distillation of the claim language and the disclosure of certain references, governs.

Grotmol's and Hickman's lack of disclosure, Hickman's teaching away, and Petitioner's failure to explain which reference discloses which specific claim elements support rejecting Petitioner's arguments.

The deposition testimony of Petitioner's expert confirms that he and Petitioner failed to perform a proper obviousness analysis regarding claim 12 for Ground 3. Dr. Janet attempted to deviate from his opinion expressed in his declaration that Grotmol in view of Hickman renders claim 12 obvious, by stating in his deposition response that Grotmol anticipates claim 12 and Hickman also anticipates claim 12. Ex. 2008, 162:4-12. Dr. Janet stated that he does not believe either Grotmol or Hickman lacks disclosure of any limitations of claim 12. *Id.* Petitioner and Dr. Janet have failed to provide a legally proper obviousness analysis for similar reasons to those discussed with respect to claim 11 and Ground 3.

VII. PETITIONER'S OBVIOUSNESS ANALYSIS IN GROUNDS 2 AND 3 IS FAULTY

Grounds 2 and 3, which the Petition characterizes as obviousness grounds under 35 U.S.C. § 103 (Petition, 4), lack the required obviousness analysis—which is a fatal flaw for an obviousness ground. *In re Kahn*, 441 F. 3d 977, 988 (Fed. Cir.

2006) ("[R]ejections on obviousness grounds cannot be sustained by mere conclusory statements; instead, there must be some articulated reasoning with some rational underpinning to support the legal conclusion of obviousness"). In Grounds 2 and 3 of the Petition, there is no articulated reasoning regarding what specific elements of claims 6, 10, 11, and 12 Grotmol (the basis for single-reference obviousness in Ground 2, and the base reference for Ground 3) does not disclose. In addition, Petitioner and its expert attempt to have their cake and eat it too, purportedly pursuing obviousness grounds for claims 6, 10, 11 and 12 (and no anticipation grounds for these claims) even though Petitioner's expert testified at his deposition that Grotmol itself discloses all the elements of Claims 6, 10, 11 and 12. The Board should not permit Petitioner to somehow change Grounds 2 and 3 to anticipation grounds in a manner that deprives Patent Owner of notice under the Administrative Procedure Act (APA), 5 U.S.C. §§ 551-559.

A. Ground 2

As discussed above with respect to Claims 10 and 11 and Ground 2, Petitioner has failed to perform a proper obviousness analysis because Petitioner has failed to identify anything in that claim that Grotmol lacks disclosure of for Ground 2. A proper obviousness analysis requires ascertaining the "differences between the prior art and the claims at issue." *Graham*, 383 U.S. at 17-18. The Petition fails to specifically identify any claimed features that are not disclosed in Grotmol. Petition,

53-54; *see also* Ex. 2008, 98:16-23; 100:17-22. Dr. Janet's deposition testimony confirms that he and Petitioner have failed to perform a proper obviousness analysis.

Petitioner also cannot prevail on anticipation for claims 10 and 11. Ground 2 is not an anticipation ground, and the Board cannot deviate from the Petition, because "it is the petition … that defines the metes and bounds of an inter partes review." *Koninklijke Philips N.V. v. Google LLC*, 948 F.3d 1330, 1336 (Fed. Cir. 2020). Petitioner has not advanced a ground of anticipation by Grotmol for claims 10 and 11 and Ground 2 and thus the Board cannot find anticipation by Grotmol for that claim.

The futility of the Petition for claims 10 and 11 under both obviousness and anticipation is not some hyperliteral technicality that the Board may overlook, but rather goes to the heart of the procedural requirements imposed on the Board by the APA. Indeed, in another IPR much like the present one, the Federal Circuit held that the Board "deviated impermissibly from the invalidity theory set forth in [the petitioner's] petition when it held that [a certain claim] was anticipated by [a certain prior art reference]" that was not specified as an anticipatory reference in a ground of that IPR. *M&K Holdings, Inc. v. Samsung Elecs. Co.*, 985 F.3d 1376, 1385 (Fed. Cir. 2021). The Court explained that the underlying concern in its decision was that if the Board "departed markedly from the evidence and theories presented by the petition or institution decision, [that would] creat[e] unfair surprise." *Id.* at 1384.

B. Ground 3

Petitioner has similarly failed to provide proper obviousness analysis for Ground 3 and cannot rely on anticipation arguments for this ground as well. As discussed above in Section VI.C with respect to Claims 6 and 11-12 for Ground 3, Petitioner has failed to identify anything missing in the primary reference for Ground 3. The Petition fails to identify any limitation(s) of claims 6 and 11-12 not disclosed by Grotmol, the primary reference of the obviousness combination. Petition, 55-64; *see also* Ex. 2008, 124:15-126:15, 150:5-11, 162:4-12. Dr. Janet's testimony confirms that he and Petitioner failed to perform a proper obviousness analysis. Petitioner also cannot prevail on anticipation for claims 6 and 11-12 for similar reasons as discussed above in Section VII.A regarding claims 10 and 11.

In sum, Petitioner could have drafted its Petition more clearly to include an anticipation ground for claims 6 and 11-12, or to include actual obviousness analysis instead of conclusory statements, but failed to do so.

VIII. CONCLUSION

For the foregoing reasons, Petitioner has failed to prove by a preponderance of the evidence that any of the Challenged Claims discussed in this Response are unpatentable. Patent Owner respectfully requests that the Board confirm the patentability of the Challenged Claims and enter judgment against Petitioner.

Dated: March 7, 2024

Respectfully submitted,

/Arvind Jairam/

Arvind Jairam
Reg. No. 62,759
AJairam@mckoolsmith.com
Stuart McCommas
Reg. No. 71,834
SMccommas@mckoolsmith.com
MCKOOL SMITH, P.C.
1999 K St. NW, Suite 600
Washington, DC 20006
Telephone: (202) 370-8300
Facsimile: (202) 370-8344

George Fishback
Reg. No. 76,345
GFishback@mckoolsmith.com
MCKOOL SMITH, P.C.
303 Colorado Street, Suite 2100
Austin, TX 78701
Telephone: (512) 692-8700
Facsimile: (512) 692-8744

Counsel for Patent Owner

CERTIFICATION OF WORD COUNT

The undersigned hereby certifies that the portions of the above-captioned **PATENT OWNER'S RESPONSE** specified in 37 C.F.R. § 42.24 have 13,652 words, in compliance with the 14,000 word limit set forth in 37 C.F.R. §42.24(b)(1). This word count was prepared using Microsoft Word 2016.

Dated: March 7, 2024

By: */Arvind Jairam/*
Arvind Jairam, Reg. No. 62,759

CERTIFICATION OF SERVICE

The undersigned hereby certifies that a copy of this **PATENT OWNER'S RESPONSE** and supporting exhibits have been served on Petitioner via email on the following counsel of record for Petitioner:

W. Karl Renner
Nicholas W. Stephens
Usman Khan
Matthew Colvin
Fish & Richardson P.C.
60 South Sixth Street, Suite 3200
Minneapolis, MN 55402
Email: IPR49649-0030IP1@fr.com

Dated: March 7, 2024

By: */Arvind Jairam/*
Arvind Jairam, Reg. No. 62,759