Trials@uspto.gov
571-272-7822

Paper 43
Date: October 21, 2025

UNITED STATES PATENT AND TRADEMARK OFFICE

BEFORE THE PATENT TRIAL AND APPEAL BOARD

TESLA, INC.,
Petitioner,

v.

AUTONOMOUS DEVICES, LLC,
Patent Owner.

IPR2024-00745
Patent 11,663,474 B1

Before TERRENCE W. McMILLIN, STEVEN M. AMUNDSON, and RUSSELL E. CASS, *Administrative Patent Judges.*

CASS, *Administrative Patent Judge*.

JUDGMENT
Final Written Decision
Determining Some Challenged Claims Unpatentable
Granting-in-Part and Denying-in-Part Patent Owner's Motion to Amend
35 U.S.C. § 318(a)

I. INTRODUCTION

A. Background

In this *inter partes* review, Tesla, Inc. ("Petitioner") challenges the patentability of claims 45–47, 51, 56, 57, 59, 60, 68, and 69 of U.S. Patent No. 11,663,474 B1 (Ex. 1001, "the '474 patent"), which is assigned to Autonomous Devices, LLC ("Patent Owner"). Patent Owner filed a Motion to Amend requesting that, if the Board finds claim 45 unpatentable, that it consider substitute claim 85, as well as claims 86–88 and 91, which are the same as original claims 46, 47, 51, and 60 but modified to be dependent on substitute claim 85. Paper 14 ("Motion to Amend" or "MTA") 1. Patent Owner also requests that, if the Board finds that claims 56 and 57 have not been shown to be unpatentable, that it consider substitute claims 92 and 93, which correspond to original claims 56 and 57 rewritten in independent form to include the limitations of original claims 45 and 46. *Id.* at 2.[1]

We have jurisdiction under 35 U.S.C. § 6. This Final Written Decision, issued pursuant to 35 U.S.C. § 318(a), addresses issues and arguments raised during the trial in this *inter partes* review. For the reasons discussed below, Petitioner has proven by a preponderance of the evidence that claims 45–47, 51, 59, 60, 68, and 69 are unpatentable. Petitioner has not proven by a preponderance of the evidence that either of claims 56 or 57 are unpatentable. We also find that Petitioner has sufficiently shown that proposed amended claims 85–88 and 91 are unpatentable, and deny Patent

[1] Patent Owner also requests that if the Board finds claims 56 and 57 unpatentable, the Board consider substitute claims 89 and 90. MTA 1. However, because, as discussed below, we find that claims 56 and 57 have not been shown to be unpatentable, we do not consider substitute claims 89 and 90 in this Decision.

Owner's Motion to Amend with respect to those claims. Because proposed amended claims 92 and 93 are substantively identical to original claims 55 and 56, which have not been found unpatentable, we grant Patent Owner's Motion to Amend as to those claims.

B. Procedural History

In the Petition, Petitioner challenged claims 45–47, 51, 56, 57, 59, 60, 68, and 69 of the '474 patent. Pet. 1. Following the Petition, Patent Owner filed a Preliminary Response, Petitioner filed a Reply to the Preliminary Response, and Patent Owner filed a Sur-reply to Petitioner's Reply. Paper 11 ("Prelim Resp."); Paper 7 ("Prelim. Reply"); Paper 8 ("Prelim. Sur-reply"). We instituted trial on all challenged claims. Paper 9 ("Inst. Dec.") 39. Following institution, Patent Owner filed a Response (Paper 13, "PO Resp."), Petitioner filed a Reply (Paper 18, "Pet. Reply"), and Patent Owner filed a Sur-reply (Paper 26, "PO Sur-reply").

During the trial, Patent Owner filed a Contingent Motion to Amend, and Petitioner filed an Opposition. MTA; Paper 19 ("MTA Opp."). We issued Preliminary Guidance on Patent Owner's Motion to Amend. Paper 21 ("Prelim. Guid."). Following the Preliminary Guidance, Patent Owner submitted a Reply (Paper 27, "MTA Reply"), and Petitioner submitted a Sur-reply (Paper 34, "MTA Sur-reply").

Petitioner submitted a Declaration of Jason Janet, Ph.D. with its Petition (Ex. 1003, "Janet Decl.") and another Declaration from Dr. Janet to support its Reply to the Patent Owner Response and Opposition to Patent Owner's Motion to Amend (Ex. 1022, "Supp. Janet Decl."). Patent Owner submitted a Declaration of Dr. Eli Saber, Ph.D. (Ex. 2001, "Saber Decl.") to support its Patent Owner Response and Motion to Amend. An oral hearing

was held on July 31, 2025, a transcript of which appears in the record. Paper 42, "Tr."

C. Applied References

Petitioner relies on the references summarized in the table below.

Name	Reference	Exhibit
Buibas	US 2014/0089232 A1, published Mar. 27, 2014	1005
Sinyavskiy	US 2013/0325768 A1, published Dec. 5, 2013	1006
Versace	US 2017/0024877 A1, published Jan. 26, 2017	1007
Grotmol	US 9,604,359 B1, filed Jan. 27, 2015, issued Mar. 28, 2017	1008
McClure	US 5,219,264, filed Apr. 10, 1990, issued Jun. 15, 1993.	1009
Zhu	US 9,221,396, filed Sep. 27, 2012, issued Dec. 29, 2015	1023

Pet. 2; MTA Opp. 1. Petitioner relied on Buibas, Sinyavskiy, Versace, Grotmol and McClure in its Petition, and Grotmol, Zhu and Buibas in its Opposition to the Motion to Amend. *Id.*

D. Asserted Grounds

Petitioner asserts that the challenged claims of the '474 patent are unpatentable based on the following grounds summarized in the table below (Pet. 1):

Claim(s) Challenged	35 U.S.C. §	Reference(s)/Basis
45–47, 51, 56–57, 59, 68–69	103	Buibas, Sinyavskiy
60	103	Buibas, Sinyavskiy, Versace
45–47, 51, 59, 68–69	102	Grotmol
60	103	Grotmol, McClure

Claim(s) Challenged	35 U.S.C. §	Reference(s)/Basis
45–47, 51, 56–57, 59, 68–69	103	Grotmol, Buibas
60	103	Grotmol, Buibas, McClure

Petitioner asserts that the proposed amended claims are unpatentable based on the following grounds:

Claim(s) Challenged	35 U.S.C. §	Reference(s)/Basis
85–91	103	Grotmol, Zhu
85–91	103	Grotmol, Zhu, Buibas

MTA Opp. 1.

E. Real Parties-in-Interest

Petitioner identifies itself as the real party-in-interest. Pet. 89. Patent Owner names itself as the real party-in-interest. Paper 3, 1.

F. Related Matters

The parties inform us that the '474 patent was asserted in *Autonomous Devices LLC v. Tesla, Inc.*, No. 22-cv-1466 (MN) (D. Del.). Pet. 89; Paper 3, 1. The parties also state that Petitioner has filed IPR proceedings against other patents owned by Patent Owner, including IPR2023-01054, IPR2023-01055, IPR2023-01169, IPR2023-01172, and IPR2023-01173. Pet. 90, Paper 3, 1–2.

G. The '474 Patent

The '474 patent is titled "Artificially Intelligent Systems, Devices, and Methods for Learning and/or Using a Device's Circumstances for Autonomous Device Operation." Ex. 1001, code (54). The '474 patent is

directed to "devices, apparatuses, systems, and related methods for providing advanced learning, anticipating, decision making, automation, and/or other functionalities." *Id.* at 1:28–32. The '474 patent describes artificially intelligent devices, systems, and methods

> that enable learning a device's circumstances including objects with various properties along with correlated instruction sets for operating the device, storing this knowledge in a knowledgebase (i.e. neural network, graph, sequences, etc.), and operating a device autonomously.

Id. at 57:66–58:7.

Figure 2 of the '474 patent is depicted below.

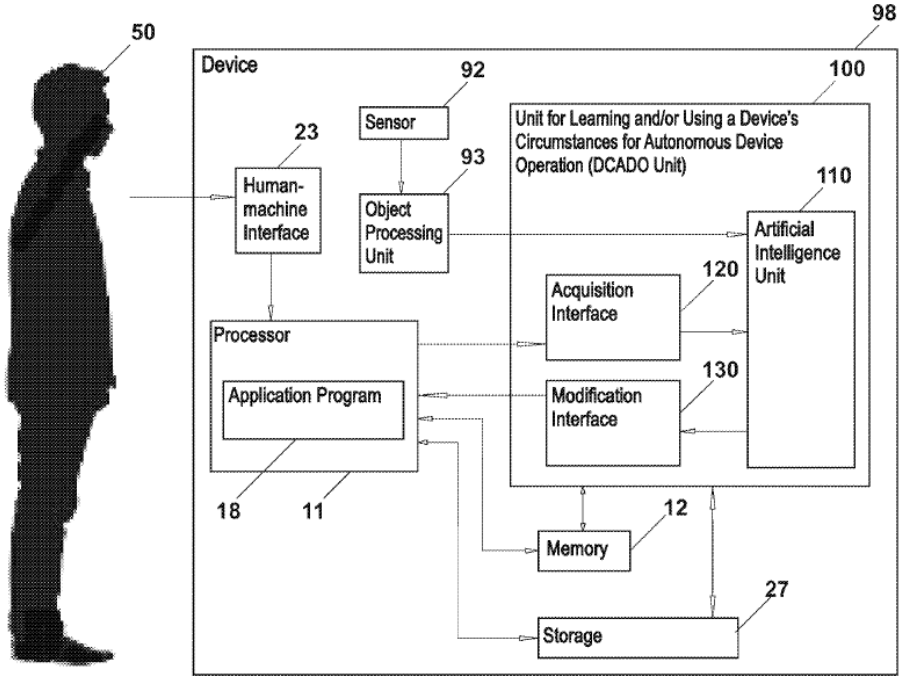

FIG. 2

Figure 2 illustrates an embodiment of device 98 comprising a "Unit for Learning and/or Using a Device's Circumstances for Autonomous Device Operation (DCADO Unit 100)," processor 11, human-machine interface 23,

sensor 92, object processing unit 93, memory 12, and storage 27. *Id.* at 67:6–11.

Processor 11 is configured to execute instruction sets for operating the device. Ex. 1001, 67:22–25. User 50 issues an operation direction to application program 18 responsive to which application program's 18 instructions or instruction sets are executed by processor 11 to perform a desired operation on device 98. *Id.* at 68:41–45. Sensor 92 "comprises the functionality for obtaining or detecting information about [the sensor's] environment" and "can be used to detect objects and/or their properties" near device 98. *Id.* at 69:19–24. Object processing unit 93 "comprises the functionality for processing output from [s]ensor 92" and can be used "to detect objects and/or their properties." *Id.* at 71:53–58. DCADO Unit 100 comprises artificial intelligence unit 110, acquisition interface 120, and modification interface 130. *Id.* at 67:13–15. Artificial intelligence unit 110 is "configured to receive a first collection of object representations" that include "one or more representations of objects detected by the sensor." *Id.* at 67:31–35.

Artificial intelligence unit 110 comprises functionality for learning device's 98 operation. Ex. 1001, 96:42–43. An embodiment of this functionality is shown in Figure 32 of the '474 patent, depicted below.

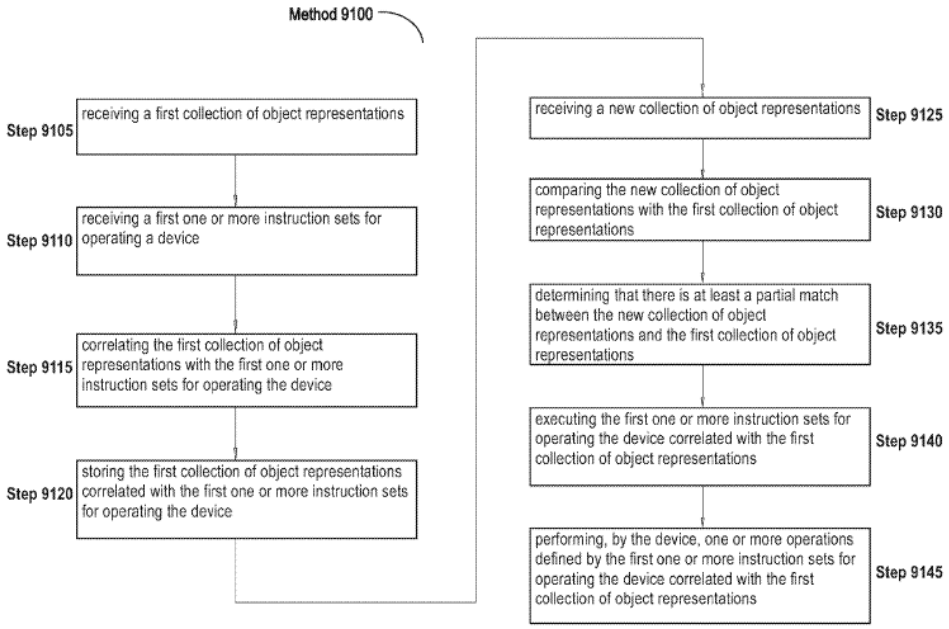

FIG. 32

Figure 32 is an illustration showing "an embodiment of method 9100 for learning and/or using a device's circumstances for autonomous device operation." *Id.* at 150:26–28. At step 9105 of Figure 32, "a first collection of object representations is received." *Id.* at 150:40–41. "An object representation may include an electronic representation of an object (i.e. Object 615, etc.) detected in a device's surrounding." *Id.* at 150:45–47. At step 9110, "a first one or more instruction sets for operating a device are received." *Id.* at 152:12–13. At step 9115, "the first collection of object representations is correlated with the first one or more instruction sets for operating the device." *Id.* at 153:34–36. At steps 9125 and 9130, a new collection of object representations is received and "compared with the first collection of object representations." *Id.* at 154:59–64. At step 9135, "a determination is made that there is at least a partial match between" the two collections. *Id.* at 155:47–49. At step 9140, the "first one or more

instruction sets for operating the device correlated with the first collection of object representations are executed." *Id.* at 157:19–21.

H. Illustrative Original Claims

Original claims 45–47, 51, 56, 57, 59, 60, 68, and 69 of the '474 patent are at issue in this proceeding. Original claims 45, 56, and 57 are illustrative of the claimed subject matter at issue and are reproduced below.

> [45.pre][2] A first device comprising:
>
> [45.1] a knowledgebase that includes one or more inputs for inputting at least a portion of a circumstance representation, wherein the one or more inputs are correlated with one or more instruction sets for operating a second device;
>
> [45.2] one or more sensors;
>
> [45.3] one or more processors; and
>
> [45.4] one or more non-transitory machine readable media storing machine readable code that, when executed by the one or more processors, causes the one or more processors to perform at least;
>
> [45.5] generating a circumstance representation, wherein the generated circumstance representation represents a circumstance detected at least in part by the one or more sensors;
>
> [45.6] determining one or more instruction sets for operating the second device at least by: inputting at least a portion of the generated circumstance representation into the one or more inputs, and using a correlation between the one or more inputs and the one or more instruction sets for operating the second device; and
>
> [45.7] at least in response to the determining, executing the one or more instruction sets for operating the second device, wherein the first device autonomously performs one or

[2] We use Petitioner's designations for the elements of claim 45. *See* Pet. v.

> more operations defined by the one or more instruction sets for operating the second device.
>
> 56. The first device of claim 46, wherein the one or more inputs are further correlated with another one or more instruction sets for operating a third device, and wherein at least a portion of the one or more instruction sets for operating the second device or at least an information related to the one or more instruction sets for operating the second device is learned in a learning process that includes operating the second device at least partially by a user, and wherein at least a portion of the another one or more instruction sets for operating the third device or at least an information related to the another one or more instruction sets for operating the third device is learned in another learning process that includes operating the third device at least partially by another user.
>
> 57. The first device of claim 46, wherein the one or more inputs are further correlated with another one or more instruction sets for operating a third device.

Ex. 1001, 176:20–46, 177:58–178:7.

II. ANALYSIS OF ORIGINAL CLAIMS

A. Legal Standards

"A claim is anticipated only if each and every element as set forth in the claim is found, either expressly or inherently described, in a single prior art reference." *Verdegaal Bros., Inc. v. Union Oil Co. of Cal.*, 814 F.2d 628, 631 (Fed. Cir. 1987). To establish anticipation, "all of the elements and limitations of the claim must be shown in a single prior reference, arranged as in the claim." *Karsten Mfg. Corp. v. Cleveland Golf Co.*, 242 F.3d 1376, 1383 (Fed. Cir. 2001).

A patent claim is unpatentable under 35 U.S.C. § 103 "if the differences between the claimed invention and the prior art are such that the claimed invention as a whole would have been obvious before the effective

filing date of the claimed invention to a person having ordinary skill in the art to which the claimed invention pertains." 35 U.S.C. § 103 (2024); *see KSR Int'l Co. v. Teleflex Inc.*, 550 U.S. 398, 406 (2007). The question of obviousness is resolved on the basis of underlying factual determinations including: (1) the scope and content of the prior art; (2) any differences between the claimed subject matter and the prior art; (3) the level of ordinary skill in the art; and (4) when in evidence, objective evidence of nonobviousness, i.e., secondary considerations.[3] *Graham v. John Deere Co.*, 383 U.S. 1, 17–18 (1966).

B. Level of Ordinary Skill in the Art

> Petitioner asserts that a person of ordinary skill in the art, would have had at least: (1) a bachelor's degree in electrical engineering, computer engineering, computer science, systems engineering, or equivalent course work with two to three years of work experience in computer vision, image/video processing, and/or machine learning; or (2) a master's degree in electrical engineering, computer engineering, computer science, systems engineering, or equivalent course work with a focus in computer vision, image/video processing, and/or machine learning.

Pet. 7 (citing Ex. 1003 ¶¶ 44–46). Patent Owner states that, for purposes of this proceeding, it adopts Petitioner's proposal. PO Resp. 5.

Considering the subject matter of the '474 patent, the background technical field, and the asserted prior art, we agree with Petitioner's proposed qualifications for the person of ordinary skill in the art, except we decline to adopt "at least," as that language is vague and open-ended. Otherwise, Petitioner's proposed definition is consistent with the level of

[3] Patent Owner does not present objective evidence of nonobviousness.

skill reflected in the specification of the '474 patent and the asserted prior art references. *See Okajima v. Bourdeau*, 261 F.3d 1350, 1355 (Fed. Cir. 2001).

Accordingly, we adopt Petitioner's assessment of the level of skill for one of ordinary skill in the art.

C. Claim Construction

We construe the challenged claims by applying the standard used in federal courts, in other words, "the same claim construction standard that would be used to construe the claim in a civil action under 35 U.S.C. [§] 282(b)," which is articulated in *Phillips v. AWH Corp.*, 415 F.3d 1303 (Fed. Cir. 2005) (en banc). 37 C.F.R. § 42.100(b) (2025). Under this standard, the words of a claim generally are given their "ordinary and customary meaning," which is the meaning the term would have to a person of ordinary skill at the time of the invention, in the context of the entire patent including the specification. *Phillips*, 415 F.3d at 1312–13. "In determining the meaning of the disputed claim limitation, we look principally to the intrinsic evidence of record, examining the claim language itself, the written description, and the prosecution history, if in evidence." *DePuy Spine, Inc. v. Medtronic Sofamor Danek, Inc.*, 469 F.3d 1005, 1014 (Fed. Cir. 2006) (citing *Phillips*, 415 F.3d at 1312–17).

Petitioner states that "no formal constructions are presently necessary," and that it "maps [the] prior art in this Petition in a manner consistent with Patent Owner's allegations of infringement before the district court." Pet. 8 (citing Ex. 1017; Ex. 1003 ¶¶ 21–25). Patent Owner states that it believes there is no need to construe any terms of the challenged original claims because there is no underlying controversy regarding any claim terms. PO Resp. 10.

For purposes of this Decision, we determine that it is not necessary to provide an express construction of any claim terms. *See Nidec Motor Corp. v. Zhongshan Broad Ocean Motor Co.*, 868 F.3d 1013, 1017 (Fed. Cir. 2017); *Vivid Techs., Inc. v. Am. Sci. & Eng'g, Inc.*, 200 F.3d 795, 803 (Fed. Cir. 1999) ("[O]nly those terms need be construed that are in controversy, and only to the extent necessary to resolve the controversy.").

D. Ground 1A: Unpatentability of Claims 45–47, 51, 56, 57, 59, 68, and 69 over Buibas in View of Sinyavskiy

Petitioner asserts that claims 45–47, 51, 56, 57, 59, 68, and 69 are unpatentable over Buibas in view of Sinyavskiy. Pet. 8–45. Patent Owner argues that Petitioner fails to show that the Buibas-Sinyavskiy combination renders obvious claims 56 and 57, and does not dispute Petitioner's showing as to the remaining claims. PO Resp. 10–36.

We begin with an overview of Buibas and Sinyavskiy. We then turn to the parties' contentions.

1. Overview of Buibas (Ex. 1005)

Buibas is directed to an "[a]pparatus and methods for learning and training in neural network-based devices." Ex. 1005, code (57). These devices "each comprise multiple spiking neurons, configured to process sensory input." *Id.* "In one approach," Buibas explains, "alternate heterosynaptic plasticity mechanisms are used to enhance learning and field diversity within the devices," and the "selection of alternate plasticity rules is based on recent post-synaptic activity of neighboring neurons." *Id.* Buibas further discloses that "[a] data representation of the neural network may be imaged and transferred to another computational environment, effectively copying the brain." *Id.*

2. Overview of Sinyavskiy (Ex. 1006)

Sinyavskiy is directed to a "stochastic spiking network learning apparatus and methods." Ex. 1006, code (54). In this system, "[a] framework may be used to enable [an] adaptive spiking neuron signal processing system to flexibly combine different learning rules (supervised, unsupervised, reinforcement learning) with different methods (online or batch learning)." *Id.* at code (57). The generalized learning framework "may employ time-averaged performance function as the learning measure," thereby "enabling modular architecture where learning tasks are separated from control tasks, so that changes in one of the modules do not necessitate changes within the other." *Id.* According to Sinyavskiy, "[s]eparation of learning tasks from the control tasks implementations may allow dynamic reconfiguration of the learning block in response to a task change or learning method change in real time." *Id.* Sinyavskiy further discloses that the generalized spiking neuron learning apparatus "may be capable of implementing several learning rules concurrently based on the desired control application and without requiring users to explicitly identify the required learning rule composition for that task." *Id.*

3. Motivation to Combine Buibas and Sinyavskiy

Petitioner argues that "it would have been obvious to partition Buibas'[s] spiking networks according to the specific techniques disclosed in Sinyavskiy" for multiple reasons. Pet. 13 (citing Ex. 1005 ¶¶ 71–72, 85, 92, 179–203; Ex. 1006 ¶¶ 12, 185, 188, 191, Fig. 6A; Ex. 1003 ¶ 63). First, Petitioner asserts, one of ordinary skill "would have been motivated to partition Buibas'[s] spiking neural network as suggested by Sinyavskiy to parallelize task execution on the robot and improve learning capabilities

(e.g., through faster learning, greater computing efficiency, and task-specific learning models) of the Buibas mobile robotic apparatus as described by Sinyavskiy and discussed by Dr. Janet." *Id.* (citing Ex. 1003 ¶ 64). Second, Petitioner contends, "partitioning Buibas'[s] robotic brain as suggested by Sinyavskiy would have beneficially expanded the range of tasks that the robot could perform by dedicating partitions to specialized tasks." *Id.* at 13–14 (citing Ex. 1006 ¶¶ 12, 185, 188, Fig. 6A; Ex. 1005 ¶¶ 71–72, 85, 92, 179–205; Ex. 1003 ¶ 65). Third, Petitioner argues, one of ordinary skill "would have been motivated to partition Buibas'[s] spiking neural network as suggested by Sinyavskiy to permit unused partitions or unused resources in the partitions to be reassigned for different tasks," which would allow for a network processing apparatus that has increased processing capability for the same network capacity while also having a lower cost, size and power consumption. *Id.* at 14 (citing Ex. 1006 ¶¶ 190–192, 105, 34, code (57); Ex. 1003 ¶ 66).

Fourth, Petitioner argues that "Buibas briefly mentions that its spiking neural networks can be partitioned but discloses little detail about the partitioning," which would invite one of ordinary skill to turn to other references, such as Sinyavskiy, for additional detail on how to implement partitioning. Pet. 14–15 (citing Ex. 1005 ¶ 92; Ex. 1003 ¶ 67). Fifth, Petitioner asserts, combining Buibas and Sinyavskiy would merely "involve[] the application of known techniques (e.g., Sinyavskiy's partitioned neural network) to a known system (e.g., Buibas'[s] mobile robot and robotic brain) to yield predictable results (e.g., Buibas'[s] robot using a spiking neural network partitioned as taught in Sinyavskiy)," particularly because "the partitioning of the Buibas neural network is reminiscent of

Recurrent Fuzzy Neural Networks (RFNNs) that were already commonplace at the end of the 1990's." *Id.* at 15 (citing Ex. 1003 ¶ 68). Finally, Petitioner contends, the proposed combination merely involves "use of known techniques (e.g., Sinyavskiy's partitioned neural network) to improve a similar system (e.g., Buibas'[s] mobile robot and robotic brain)." *Id.* (citing Ex. 1003 ¶ 69).

Petitioner further argues that one of ordinary skill "would have reasonably expected success implementing the combination, especially as Buibas and Sinyavskiy describe highly similar systems involving spiking neural networks used for training/operating robots." Pet. 15–16 (citing Ex. 1005 ¶ 92; Ex. 1003 ¶ 70). Indeed, Petitioner contends, "Buibas itself confirms that its spiking neural network can be partitioned, while Sinyavskiy provides the details for doing so." *Id.* at 16 (citing Ex. 1005 ¶ 92; Ex. 1003 ¶ 70).

Patent Owner does not specifically address the motivation to combine Buibas and Sinyavskiy. *See* PO Resp; PO Sur-reply.

Based on the present record, we find that Petitioner has set forth sufficient reasoning to support a motivation to combine Buibas and Sinyavskiy, as well as sufficient reasoning to support the determination that one of ordinary skill would have had a reasonable expectation of success in making the combination. Therefore, Petitioner has sufficiently proven that one of ordinary skill would have been motivated to combine Buibas and Sinyavskiy as proposed.

4. Independent Claim 45

a) [45.pre] (preamble) "A first device comprising:"

Petitioner argues that, to the extent the preamble is limiting, the Buibas-Sinyavskiy combination renders it obvious. Pet. 16 (citing Ex. 1005 ¶¶ 69, 130, 230, Fig. 7; Ex. 1003 ¶ 71). For example, Petitioner asserts, Buibas describes "autonomous" robotic vehicles including "rovers, unmanned air vehicles, underwater vehicles, smart appliances (e.g. ROOMBA), etc." *Id.* (citing Ex. 1005 ¶ 230). These robots, according to Petitioner, "include 'brain images' that are configured through training procedures to autonomously control movements and actions of the robot," and these brain images can "be shared with other robots." *Id.* (citing Ex. 1005 ¶¶ 71–72, 85, 179–203). For example, Petitioner contends, Buibas discloses that "a user may extract the state of a neural network (or other useful training-related information) directly from the device" and "the artificial mind and its traits may be copied, stored, [] later retrieved," and "shared with other users." *Id.* (citing Ex. 1005 ¶¶ 70–71, 182) (alteration in original). Thus, Petitioner argues, "the claimed '***first device***' corresponds to a robot in Buibas that includes at least a portion of a brain image that was trained on another robot (and shared with the first robot)." *Id.* at 16–17 (citing Ex. 1003 ¶ 71).

Patent Owner does not present arguments concerning claim 45. *See* PO Resp. 10–36.

Petitioner's contentions are supported by the cited portions of Buibas. After consideration of the contentions and the evidence of record during the

trial, we determine that Petitioner has shown sufficiently that Buibas discloses the preamble of claim 45.[4]

> *b) [45.1] a knowledgebase that includes one or more inputs for inputting at least a portion of a circumstance representation, wherein the one or more inputs are correlated with one or more instruction sets for operating a second device;*

Petitioner argues that "Buibas teaches that the robotic device (***first device***) can operate autonomously to perform tasks or implement behaviors defined in 'brain images,'" and that a "brain image" stores information that the robot can use to carry out a particular task or implement a particular behavior. Pet. 17–18 (citing Ex. 1005 ¶¶ 71–72, 85, 179–203). Petitioner also asserts that "[t]he 'brain image' provides at least one ***knowledgebase***," as required by limitation [45.1]. *Id.* More specifically, Petitioner maps "the portion of a brain image (e.g., a partition) dedicated to a particular task or behavior to the claimed '***knowledgebase***'" and explains that, as discussed earlier, the Buibas-Sinyavskiy combination allows the brain image to be "partitioned into multiple sections each dedicated to a different task or behavior." *Id.* at 18 n.2. Petitioner notes that the '474 patent defines the "knowledgebase 530" broadly by explaining that it "may be or include any data structure or arrangement capable of storing the knowledge of a device's operation in circumstances including objects with various properties." *Id.* (citing Ex. 1001, 101:66–102:29).

Petitioner argues that Buibas further teaches that "the brain image is loaded onto a 'brain stem' (bSTEM) that controls the robotic device," where

[4] Because Petitioner sufficiently shows that Buibas teaches the preamble, we need not determine whether the preamble is limiting for purposes of this Decision.

"[t]he bSTEM . . . is the hardware component on which the brain image is executed." Pet. 18 n.3 (citing Ex. 1005 ¶ 202) (alterations in original). According to Petitioner, Buibas also uses the term "robotic brain" to refer to "a trained network or collection of networks." *Id.* (citing Ex. 1005 ¶ 85). Thus, Petitioner contends, "[a] robotic brain and/or a bSTEM executing a brain image provide related/alternative mappings for the claimed 'knowledgebase.'" *Id.* (citing Ex. 1003 ¶ 72). Petitioner includes an annotated version of Figure 7 showing the "robotic brain" 712 within a "robotic apparatus" 610, reproduced below.

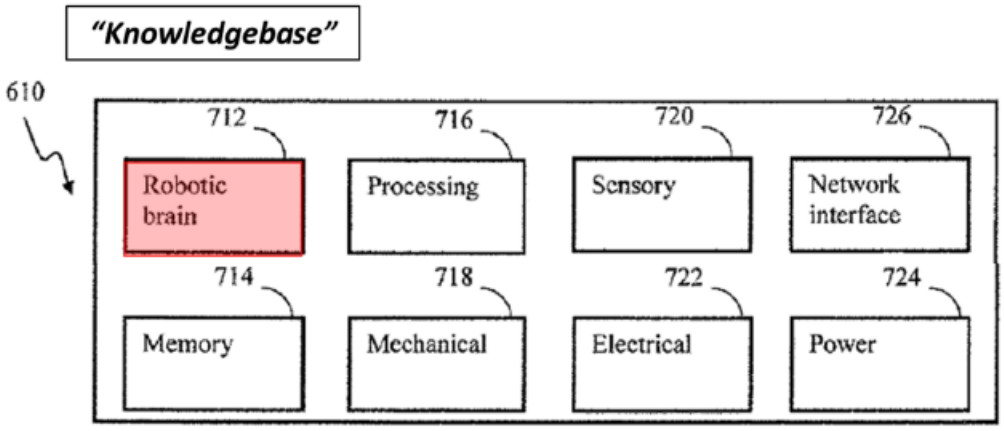

FIG. 7

Petitioner's annotated version of Buibas's Figure 7 depicting the claimed "knowledgebase," including robotic brain 712 (red) within robotic apparatus 610. Pet. 19 (citing Ex. 1005, Fig. 7).

Petitioner argues that Buibas's "brain image" can be implemented using "any number of different artificial intelligence models and paradigms" including, for example, an "artificial spiking neural network." Pet. 18–20 (citing Ex. 1005 ¶ 72, Figs. 10, 11B). According to Petitioner, "Buibas teaches that the partition of a 'brain image' (***knowledgebase***) for a particular task or behavior of the robot includes an 'interface' or 'connections' (***one or more inputs***) that allow the brain image to receive encoded sensory signals

and information about the environment, thereby allowing the robot to react appropriately based on the circumstance." *Id.* at 21 (citing Ex. 1005 ¶¶ 58, 74, 136–137, 152, Figs. 10, 11B; Ex. 1003 ¶ 73). Petitioner includes annotated versions of Figures 10 and 11B of Buibas, reproduced below, to show these interfaces.

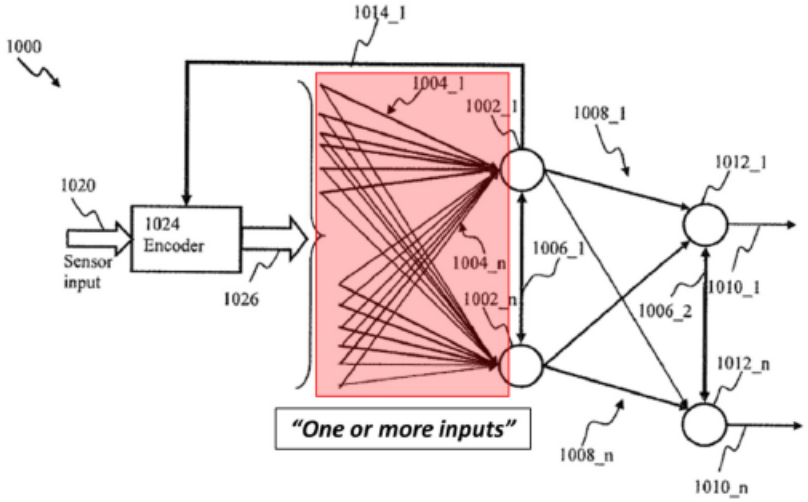

FIG. 10

Petitioner's annotated version of Figure 10 of Buibas showing the input interface in red. Pet. 22 (citing Ex. 1005 ¶ 136, Fig. 10).

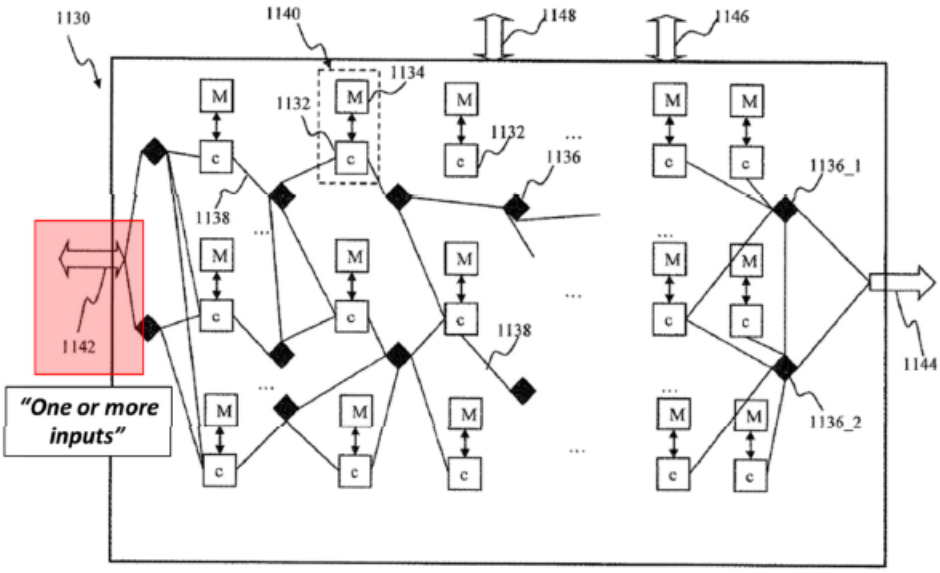

FIG. 11B

Petitioner's annotated version of Figure 11B of Buibas showing the input interface in red. Pet. 22 (citing Ex. 1005 ¶ 152, Fig. 11B; Ex. 1003 ¶ 73).

Additionally, Petitioner argues that Buibas's "brain image" for a particular task or behavior "is configured, when executed, to issue 'commands' (***one or more instruction sets***) to motors and other components of the robot that cause the robot to carry out a task/behavior defined by the brain image." Pet. 23 (citing Ex. 1005 ¶¶ 130–131, 153, 157–159, 161). For example, Petitioner contends, Buibas shows a "neuromorphic apparatus" with an output "interface 1144" that "provide[s] output (e.g., an indication of [a] recognized object or a feature, or a motor command, e.g., to zoom/pan the image array)," which constitutes "one or more instruction sets," (*id.* (first alteration in original)), as shown in the annotated version of Buibas's Figure 11B, reproduced below.

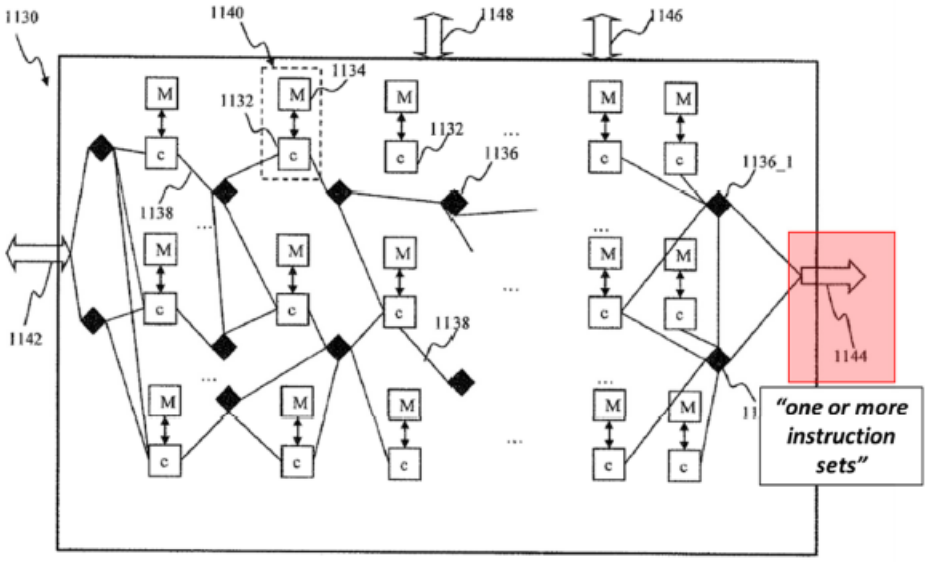

FIG. 11B

Petitioner's annotated version of Figure 11B of Buibas showing output interface 1144 in red. Pet. 23 (citing Ex. 1005 ¶¶ 152–153, Fig. 11B; Ex. 1003 ¶ 74).

Petitioner also argues that Buibas teaches implementing its "robotic brain" as "a partitioned network," and that Sinyavskiy provides more details about such a "partitioned network configuration." Pet. 24 (citing Ex. 1005 ¶¶ 92, 96; Ex. 1006 ¶¶ 12, 185, 188, Fig. 6A). For example, Petitioner asserts, "Sinyavskiy discloses how different portions of a spiking neural network can be partitioned into sections dedicated to different tasks," as shown in Petitioner's annotated version of Sinyavskiy's Figure 6A, reproduced below.

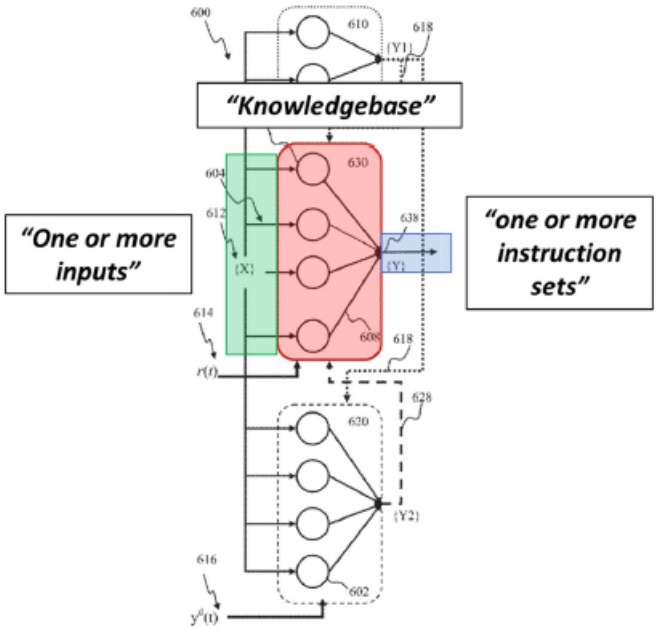

FIG. 6A

Petitioner's annotated version of Sinyavskiy's Figure 6 showing the "one or more inputs" in green, the "knowledgebase" in red, and the "one or more instruction sets" in blue. Pet. 24 (citing Ex. 1006 ¶¶ 185–192, Figs. 6A–6B; Ex. 1003 ¶ 75).

Petitioner further contends that Buibas "teaches that brain images defining different tasks or behaviors can be combined (e.g., 'merged') to create an 'offspring' brain image with enhanced capabilities, where the original ('parent') brain images persist as partial brain images (e.g., partitions) in the combined ('offspring') image." *Id.* at 25 (citing Ex. 1005 ¶¶ 94–104, 188–189, 220, 225, Figs. 4–5; Ex. 1003 ¶ 76).

"In the Buibas-Sinyavskiy combination," Petitioner argues, "a partition of a brain image for a particular task or behavior provides the claimed '***knowledgebase***,'" and "[t]he input interface or connections to an individual partition (***one or more inputs***) are correlated with the control commands (***one or more instruction sets***) produced by that partition." Pet. 25–26 (citing Ex. 1005 ¶¶ 92–104, 188–189, 220, 225, Figs. 4–5;

Ex. 1006 ¶¶ 12, 185, 188, Fig. 6A). For example, Petitioner asserts, in Sinyavskiy's Figure 6A reproduced above, "the inputs (***one or more inputs***) of partition 630 (***knowledgebase***) are correlated with the outputted motor commands '{Y}' (***one or more instruction sets***)," the "inputs of partition 610 are correlated with output '{Y1}'[,] and the inputs of partition 620 are correlated with output '{Y2}' (***the one or more inputs are correlated with one or more instruction sets***)." *Id.* at 26 (citing Ex. 1006 ¶¶ 185–188, Fig. 6A). The correlation, according to Petitioner, "relates the inputs of an individual partition to the outputs produced by that partition," and the inputs of a given partition "are not correlated to the outputs of other partitions." *Id.* (citing Ex. 1003 ¶ 77).

Additionally, Petitioner argues that Buibas teaches that "brain images can be shared and loaded on robots other than the robot on which the brain image was originally trained." Pet. 27 (citing Ex. 1005 ¶¶ 70–71, 85, 184, 188, 201, Fig. 14). "When a first robot (***first device***) 'loads' a brain image (containing a ***knowledgebase***)," according to Petitioner, "either in full or as a partial image combined with other images, which was trained on a second robot (***second device***), the commands produced by that brain image constitute ***one or more instruction sets <u>for operating a second device</u>***, as claimed." *Id.* (citing Ex. 1003 ¶ 78). In this context, Petitioner contends, Buibas's brain image "provides instruction[s] that were learned on a second device" but are "applied to operate a first device." *Id.* at 27–28 (citing Ex. 1003 ¶ 78). Petitioner points to its annotated version of Buibas's Figure 14, reproduced below, to illustrate "an example 'cloud-based training system' that can download stored brain images to a robot." *Id.* at 28.

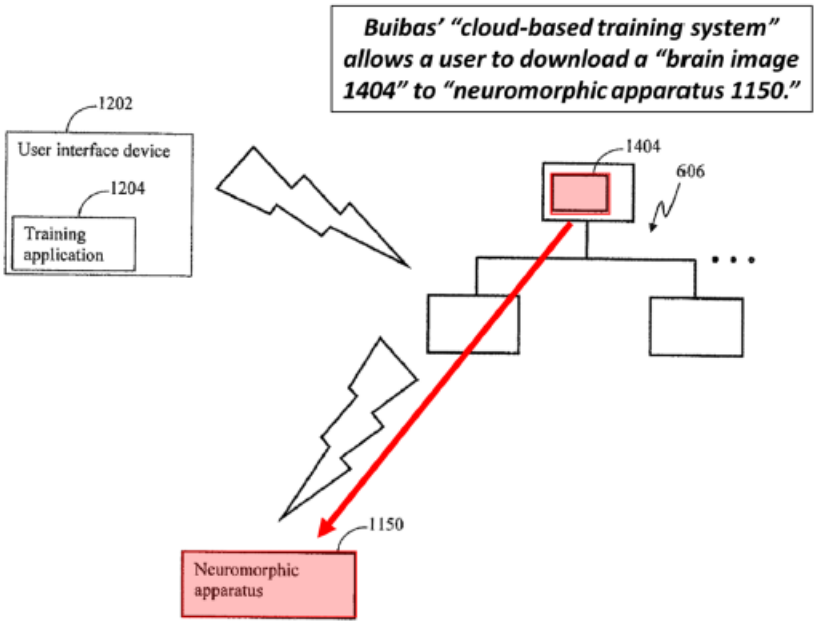

FIG. 14

Petitioner's annotated version of Buibas's Figure 14 showing a "cloud based training system" that allows a user to download a "brain image 1404" (red) to "neuromorphic apparatus 1150" (red). Pet. 28 (citing Ex. 1005, Fig. 14).

Petitioner argues that these examples from Buibas "are similar to examples given in the '474 Patent, for example, in which 'a Device 98 . . . having access to a combined Knowledgebase 530 can use the collective knowledge learned from multiple Devices 98 for the Device's 98 autonomous operation.'" Pet. 28 (citing Ex. 1001, 103:35–39) (alteration in original). Petitioner also asserts that this mapping is "consistent with the limitations in dependent claim 51" of the '474 patent, which recite that "at least a portion of the one or more instruction sets for operating the second device is learned in a learning process that includes operating the second device at least partially by a user." *Id.* at 28–29 (citing Ex. 1001, claims 51–52; Ex. 1003 ¶ 79). "As another example," according to Petitioner, "Buibas discloses that 'multiple mechanical, sensory, or electrical units may be controlled [by] a single robotic brain via network/radio connectivity.'" *Id.* at 29 (citing Ex. 1005 ¶ 130). Thus, Petitioner contends, Buibas "discloses or

plainly suggests that the motor commands issued by a robotic brain can be used to operate not only a local robot (***first device***) on which the brain is installed, but can also be applied to operate a remote robot (***second device***) which receives the operating instructions from the first robot over a wireless connection." *Id.* Likewise, according to Petitioner, "[t]he control outputs (e.g., motor commands) provided to remotely operate the second device in this example" constitute "one or more instruction sets for operating a second device" as claimed. *Id.*

Patent Owner does not present arguments concerning claim 45 under this ground. *See* PO Resp. 10–36.

Petitioner's contentions are supported by the cited portions of Buibas. After consideration of the contentions and the evidence of record during the trial, we determine that Petitioner has shown sufficiently that this limitation would have been obvious over Buibas and Sinyavskiy.

c) [45.2] one or more sensors;
[45.3] one or more processors; and

Petitioner argues that Buibas discloses that its robotic device includes one or more "sensory devices" and "sensory information," which meet the claim language requiring "one or more sensors." Pet. 29 (citing Ex. 1005 ¶¶ 132, 136). According to Petitioner, Buibas discloses examples of sensory devices, including "video, audio, haptic, capacitive, radio, vibrational, ultrasonic, infrared, and temperature sensors[,] radar, lidar and/or sonar." *Id.* at 30 (citing Ex. 1005 ¶¶ 132, 136). Petitioner also contends that Buibas's Figure 7 shows an example robotic apparatus that includes "sensory devices 720." *Id.* (citing Ex. 1005 ¶ 132, Fig. 7).

Petitioner further argues that Buibas's robotic device includes "processing capacity 716" and "processing devices," which meet the claim language requiring "one or more processors." Pet. 30 (citing Ex. 1005 ¶¶ 130, 149, Fig. 7). Petitioner asserts that Buibas discloses examples of processing devices, including "a single core/multicore CPU, DSP, FPGA, GPU, ASIC, combinations thereof, and/or other processors." *Id.* (citing Ex. 1005 ¶ 149).

Patent Owner does not present arguments concerning claim 45 under this ground. *See* PO Resp. 10–36.

Petitioner's contentions are supported by the cited portions of Buibas. After consideration of the contentions and the evidence of record during the trial, we determine that Petitioner has shown sufficiently that Buibas discloses these limitations of claim 45.

d) [45.4] one or more non-transitory machine readable media storing machine readable code that, when executed by the one or more processors, causes the one or more processors to perform at least;

Petitioner argues that Buibas discloses that its robotic device includes "memory" and/or "a nonvolatile storage device 1106, comprising, inter alia, computer readable instructions." Pet. 31 (citing Ex. 1005 ¶¶ 130, 146, 154, Fig. 7). Petitioner also asserts that Buibas discloses that this media is used to "implement various aspects of spiking neuronal network operation (e.g., sensory input encoding, connection plasticity, operation model of neurons, etc.)." *Id.* (citing Ex. 1005 ¶ 146).

Patent Owner does not present arguments concerning claim 45 under this ground. *See* PO Resp. 10–36.

Petitioner's contentions are supported by the cited portions of Buibas. After consideration of the contentions and the evidence of record during the trial, we determine that Petitioner has shown sufficiently that Buibas discloses this limitation of claim 45.

> *e) [45.5] generating a circumstance representation, wherein the generated circumstance representation represents a circumstance detected at least in part by the one or more sensors;*

Petitioner argues that Buibas describes how the robot's sensors can detect information representative of a circumstance. Pet. 32 (citing Ex. 1005 ¶¶ 88, 117, 137, 188, 232, Fig. 10). Specifically, Petitioner points to Buibas's disclosure that sensory devices 720 can include "video, audio, haptic, capacitive, radio, vibrational, ultrasonic, infrared, and temperature sensors[,] radar, lidar and/or sonar," each of which detects information about the environment or other circumstances of the robot. *Id.* According to Petitioner, "Buibas discloses that information detected by the robot's sensors are representative of circumstances of the robot, including for example, "gestures, voice, posture, face, etc." *Id.* (citing Ex. 1005 ¶¶ 117, 232). Petitioner also contends that Buibas teaches "that sensory inputs (e.g., sensory input 1020) (***represent[ing] a circumstance detected at least in part by the one or more sensors***) can be encoded to generate an 'encoded signal' (***a circumstance representation***) representative of a circumstance of the robot." *Id.* at 33 (citing Ex. 1005 ¶ 137) (alteration in original). Petitioner further argues that Buibas's Figure 10 illustrates an example "input interface configured to receive an input sensory signal," and that Sinyavskiy also discloses a partition 610 that "adapt[s] raw sensory input of a robot

apparatus to [the] internal format of the network." *Id.* (citing Ex. 1005 ¶ 136; Ex. 1006 ¶ 188; Ex. 1003 ¶¶ 85–86) (first alteration in original).

Patent Owner does not present arguments concerning claim 45 under this ground. *See* PO Resp. 10–36.

Petitioner's contentions are supported by the cited portions of Buibas. After consideration of the contentions and the evidence of record during the trial, we determine that Petitioner has shown sufficiently that Buibas discloses this limitation of claim 45.

> *f) [45.6] determining the one or more instruction sets for operating the second device at least by: inputting at least a portion of the generated circumstance representation into the one or more inputs, and using a correlation between the one or more inputs and the one or more instruction sets for operating the second device; and*

Petitioner argues that the Buibas-Sinyavskiy combination renders this limitation obvious. Pet. 34. Petitioner asserts that, for example, "Buibas discloses that, in operation, at least a portion of the robot's 'encoded [sensory] signal' (***at least a portion of the generated circumstance representation***) is inputted into the 'interface' or input 'connections' (***one or more inputs***) of the robot's brain." *Id.* (citing Ex. 1005 ¶¶ 130–131, 153, 159; Ex. 1006 ¶ 110, Fig. 6A). "In the Buibas-Sinyavskiy combination," according to Petitioner, "the encoded sensory signal is predictably provided to the input interface/connections (***one or more inputs***) of an individual partition of the brain (***knowledgebase***) configured to produce control outputs (e.g., motor commands) (***one or more instruction sets***) for a particular task or behavior of the robot." *Id.* Petitioner provides an annotated version of Sinyavskiy's Figure 6A, reproduced below, to illustrate an example of a

"partitioned neural network" that generates an "output {Y}" from an "input{X}." *Id.*

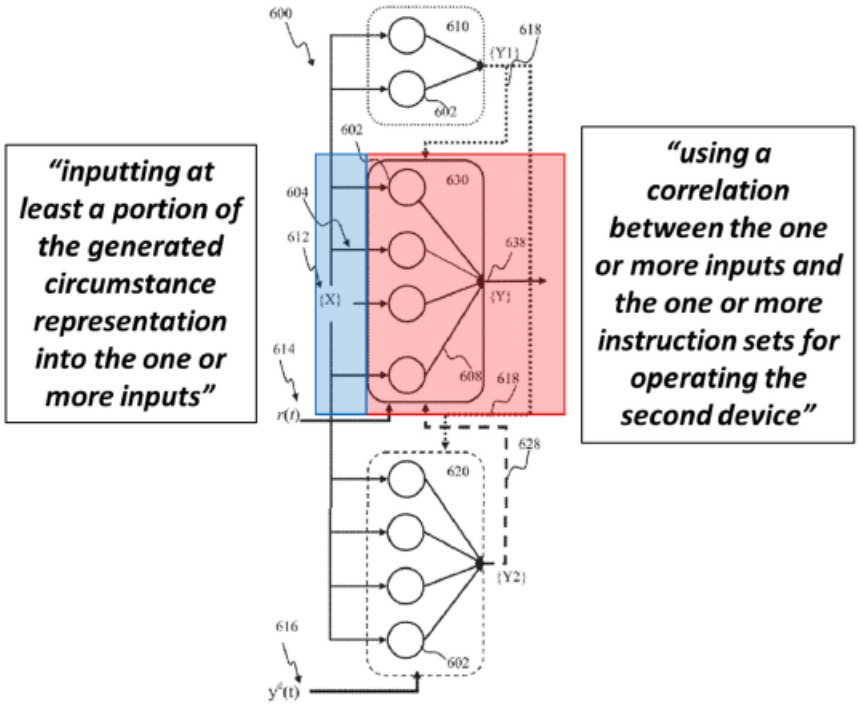

FIG. 6A

Petitioner's annotated version of Sinyavskiy's Figure 6A showing "inputting at least a portion of the generated circumstance representation into the one or more inputs" in blue and "using a correlation between the one or more inputs and the one or more instruction sets for operating the second device" in red. Pet. 35 (citing Ex. 1006, Fig. 6A).

Petitioner argues that, as discussed above for limitation [45.1], "the input interface/connections (***one or more inputs***) of a partition of a brain image for a particular task or behavior are correlated with the commands produced by that brain image (***using a correlation between the one or more inputs and the one or more instruction sets for operating the second device***)." Pet. 35–36 (citing Ex. 1003 ¶ 88). "When the robot (***first device***) operates autonomously to perform a particular task or behavior implemented by the partition," Petitioner contends, "it uses this correlation to determine

one or more commands (***one or more instruction sets***) appropriate to carry out that particular task or behavior in view of the inputted encoded sensory signal (***at least a portion of the generated circumstance representation***)." *Id.*

Petitioner further argues that, as discussed with respect to limitation [45.1], "the commands (***one or more instruction sets***) produced by a brain on a first robot (***first device***) can be learned in a training procedure performed on a second robot (***second device***) such that the commands determined based on the input encoded sensory signal (***at least a portion of the generated circumstance representation***) are commands for operating the second robot (***one or more instruction sets <u>for operating the second device</u>***)." Pet. 36.

Patent Owner does not present arguments concerning claim 45 under this ground. *See* PO Resp. 10–36.

Petitioner's contentions are supported by the cited portions of Buibas and Sinyavskiy. After consideration of the contentions and the evidence of record during the trial, we determine that Petitioner has shown sufficiently that this limitation would have been obvious over the combination of Buibas and Sinyavskiy.

g) Conclusion as to Claim 45

For the reasons discussed above, and based on the full trial record, Petitioner has proven by a preponderance of the evidence that claim 45 would have been obvious over the combination of Buibas and Sinyavskiy.

5. Dependent Claims 46, 47, 51, 59, 68, and 69

Petitioner presents arguments that dependent claims 46, 47, 51, 59, 68, and 69 would have been obvious over the combination of Buibas and

Sinyavskiy. Pet. 68–72. Patent Owner does not present arguments as to these claims. *See* PO Resp. 10–36. After considering the full trial record, we find that Petitioner has proven by a preponderance of the evidence that these dependent claims would have been obvious over the Buibas-Sinyavskiy combination.

6. Dependent Claims 56 and 57

Claim 56 recites, *inter alia*, that "the one or more inputs are further correlated with another one or more instruction sets for operating a third device." Ex. 1001, 177:58–60. Claim 57 includes a comparable limitation. *Id.* at 178:5–7. Claim 45, upon which claims 56 and 57 depend, makes clear that the "one or more inputs" are "for inputting at least a portion of a circumstance representation," and are "correlated with one or more instruction sets for operating a second device." *Id.* at 176:21–25.

Petitioner argues that Buibas discloses that the input interface/connections (one or more inputs) of a partition of a brain image (knowledgebase) for a particular task or behavior are correlated with the instruction sets produced by that partition. Pet. 41. Petitioner asserts that Buibas also discloses techniques for "merging" brain images to combine behavior modules learned on two or more robots (a second device and a third device). *Id.* at 41–42. For example, according to Petitioner, "non-interleaved" network merges can be used "to combine capabilities of two (or more) parents or to add a capability to one of the parent network[s]." *Id.* at 42. Thus, according to Petitioner, it would have been obvious to one of ordinary skill that the parents to a merged network that forms a partition of a brain image on the first device can be trained on separate devices (such as a second device and a third device) by respective users, such that the inputs to

the offspring brain image on the first device are correlated with commands (instruction sets) for operating both the second device and the third device. *Id.* Petitioner illustrates this argument with an annotated version of Buibas's Figure 4, reproduced below.

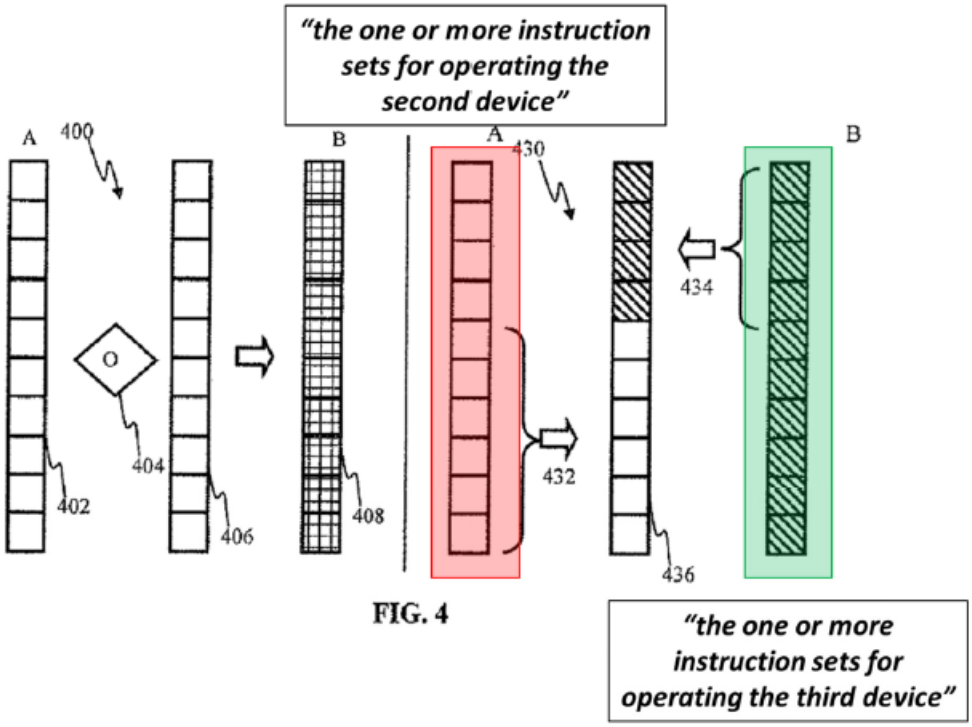

Id. at 43 (citing Ex. 1005, Fig. 4). In the above annotated figure, weight vectors of the parent networks A and B are shown in pink and green, respectively. Pet. 43; *see* Ex. 1005 ¶ 96. Parent A (pink) provides the portion 432 and parent B (green) provides the portion 434 to offspring 436. *Id.* According to Petitioner, portion 434 represents "the one or more instruction sets for operating the second device" and portion 432 represents the one or more "instruction sets for operating the third device." Pet. 43. Petitioner does not rely on Sinyavskiy for this limitation. Pet. 41–44.

Patent Owner responds that the cited portions of Buibas do not teach one or more inputs that are correlated with instruction sets for operating a

second device ***and*** correlated with instruction sets for operating a third device. PO Resp. 11–12. Patent Owner argues that this limitation is not taught by Buibas's network merge in Figure 4, and that Petitioner's argument to the contrary misunderstands Buibas's operation. *Id.* at 12–13. More specifically, Patent Owner asserts that Buibas's merge operation is a merging of weights, which are numerical values associated with connections among neurons, and weight vectors, which are lists of weights. *Id.* at 12–14. According to Patent Owner, these weights and weight vectors are used by the neural network to derive, at the output neurons, an instruction set for operating a device, but the weights and weight vectors are not themselves instruction sets. *Id.* at 13–14. Thus, Patent Owner contends, in the context of Buibas's Figure 4, when a parent weight vector 402 is merged with a parent weight vector 406, the result is an offspring weight vector 408 with updated weights. *Id.* at 14. As a result, according to Patent Owner, this merging of weight vectors results in another vector of weights, not instruction sets, and therefore the merging of weights or weight vectors does not involve merging of instruction sets. *Id.* at 15–16 (citing Ex. 2001 ¶¶ 14, 68–69).

Patent Owner argues that the other portions of Buibas cited by Petitioner similarly describe merging weights and weight vectors rather than discussing instruction sets. PO Resp. 16–19. And, according to Patent Owner, one of ordinary skill would have understood that further correlating the same one or more inputs with another instruction set for operating a neural network, as claims 56 and 57 recite, would require retraining Buibas's neural network. *Id.* at 21. Retraining a neural network, Patent Owner contends, does not involve merging of weights or weight vectors, and

Buibas's merge operation does not disclose or suggest retraining a neural network to correlate one set of inputs with different instruction sets for second and third devices. *Id.*

Petitioner responds that Patent Owner identifies no "criticality or particular significance" to the claimed feature of correlating the same inputs to an additional set of instructions, and provides scant disclosure of this feature in the '474 patent, leaving it to one of ordinary skill to implement this feature in a suitable model. Pet. Reply 3–5. Petitioner acknowledges that Buibas's discussion of Figure 4 centers on merging weights, but argues that Buibas's disclosure is broader and discloses that not only weights, but also "brain images," can be the subject of a network merge. *Id.* at 7–8 (citing Ex. 1005 ¶¶ 70, 188–189, 225). According to Petitioner, a "brain image" fully defines the neural network "including not just weights but also the neurons, topology, and pathways of the network." *Id.* at 8 (emphasis omitted) (citing Ex. 1005 ¶¶ 203, 205; Ex. 1022 ¶ 15). Thus, Petitioner contends, one of ordinary skill would have understood or found obvious that a network merge in Buibas would involve a merge of the neural networks themselves, including but not limited to the weights in the networks. *Id.* at 9 (citing Ex. 1022 ¶ 16). This merging of neural networks, Petitioner argues, would allow the offspring to implement the combined capabilities of the parent networks, including output instruction sets. *Id.* at 9–10 (citing Ex 1022 ¶ 17).

As an example of this merging, Petitioner points to Buibas's disclosure that "two or more trash collector robotic apparatus, employed in a home or an office building, and comprising similar hardware (e.g., sensors and actuators) but trained under different conditions, and hence, comprising

different sets of network weights, may utilize interleaved merges to produce an off-spring exhibiting combined set of capabilities." Pet. Reply 11 (citing Ex. 1005 ¶ 103). Because the offspring includes the "combined set of capabilities" of each of the parents, Petitioner argues, one of ordinary skill would have understood that the offspring includes instruction sets for operating a first parent (e.g., a second device) and additional instruction sets for operating a second parent (e.g., a third device). *Id.* at 11–12 (citing Ex. 1022 ¶ 20). And, according to Petitioner, the combined network would have a single set of inputs correlated with each of its outputs, including the instruction sets for operating the first and second parents. *Id.*

Petitioner further argues that this limitation is met by the embodiment of Buibas's Figure 11D, which depicts a partitioned neuromorphic apparatus. Pet. Reply 12–13. Petitioner submits an annotated version of Figure 11D, which is reproduced below.

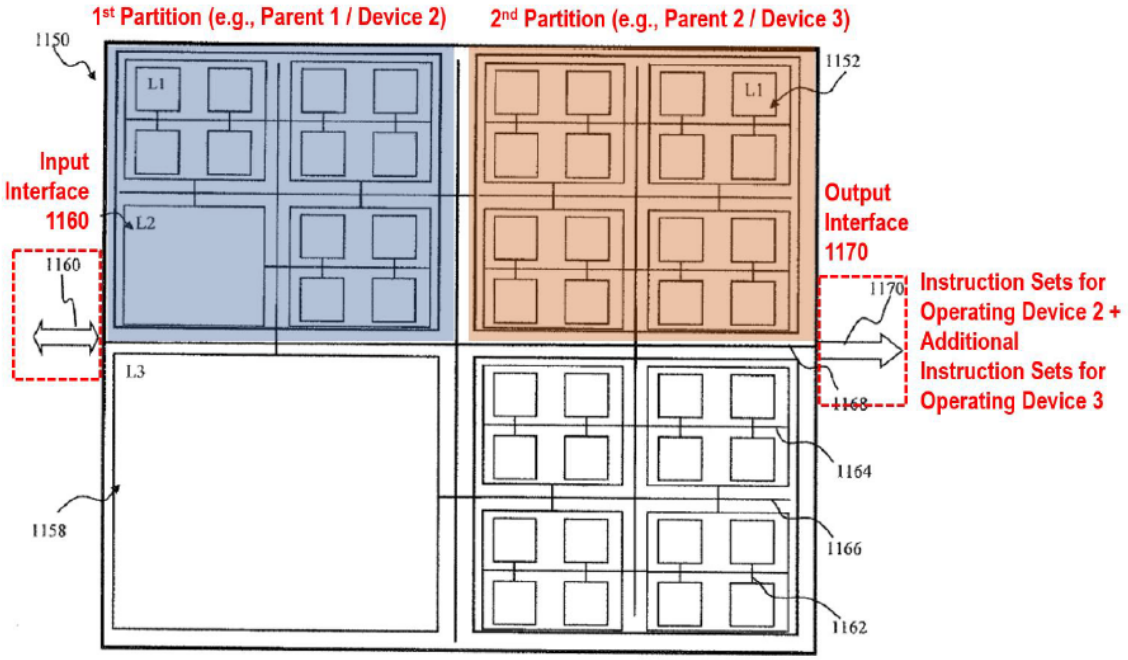

FIG. 11D

Pet. Reply 13. Petitioner argues that this apparatus includes a single input interface 1160 and a single output interface 1170. *Id.* at 12. According to Petitioner, the outputs of each of partitions 1 and 2 include instruction sets for operating the first and second parents (the claimed second and third devices), which are communicated to output interface 1170. *Id.* at 12–13. Thus, Petitioner contends, the input interface 1160 is naturally correlated with the instructions sets for operating both devices. *Id.* Additionally, Petitioner asserts, this partitioned brain image involves no changes to the weights, neurons, or topology of the parent networks, because each partition simply replicates a parent network and provides the same capabilities as its parent. *Id.* at 15 (citing Ex. 1022 ¶ 25).

Additionally, Petitioner argues that interleaved merges that combine the parents into a single, non-partitioned network would provide a combined set of capabilities of the parents without retraining. Pet. Reply 16. Petitioner also contends that, in any event, one of ordinary skill would have known how to perform re-training if desired, and that Buibas explains that continual training can be performed to improve performance of the brain image. *Id.* at 16–17. Finally, Petitioner argues that even if one were to accept that Buibas's merge operation merges only network weights, as Patent Owner contends, that merging of weights could result in combining instruction sets. *Id.* at 17–18. According to Petitioner, weights and instruction sets are "interrelated" because the output instruction sets produced for a given input depends on the weights of connections between the input and output. *Id.* Therefore, Petitioner contends, one of ordinary skill would have understood and found obvious that merging weights would "produce outputs corresponding to the capabilities of the parents, e.g.,

instructions sets for operating a second device and additional instruction sets for operating a third device." *Id.* at 19 (citing Ex. 1022 ¶ 29).

Patent Owner responds that Buibas explains that its network merge is a merging of weights, and that none of the portions of Buibas discussing "brain images" disclose or suggest correlation of inputs with instruction sets for operating a device. PO Sur-reply 3–4. Patent Owner also argues that the cited portions of Buibas describing combining of "capabilities" of parent networks do not teach combining "instruction sets," because instruction sets require more than just capabilities, such as code that instructs a device to carry out an action. *Id.* at 6–7. Patent Owner further argues that Buibas, when describing its partitioned neuromorphic apparatus shown in Figure 11D, says nothing about one partition producing an instruction set for one device and another partition producing an instruction set for another device, and that Petitioner's arguments on this point are speculative and conclusory. *Id.* at 8–9.

After considering the full trial record, we find that Petitioner has failed to meet its burden to show that Buibas teaches this limitation of claims 56 and 57. First, we agree with Patent Owner that Buibas's Figure 4 and its accompanying description in paragraphs 94–98 describe merging weights of a neural network, not instruction sets. *See* PO Resp. 12–14. For example, Paragraphs 94–96 recite as follows:

> Network Merges
>
> [0094] In some implementations, the network lifecycle may comprise network weight updates comprising two or more sources, also referred herein to as "merges."
>
> [0095] In one or more implementations, such as the merge 400 illustrated in FIG. 4, the "offspring network configuration (e.g.,

> the weight vector W) 408 may be obtained using two parent weight vectors 402, 406 combined via an operation 404.
>
> [0096] In some implementations, the network merge may comprise non-interleaved combination as illustrated by the merges 430 in FIG. 4, where the parents A provides the portion 432 and the parent B provides the portion 434 to the off-spring 436. In some implementations (not shown), the portion 432 may comprises the same number of weights as the portion 434. The non-interleaved network merge, such as illustrated in FIG. 4, may be used, for example, to combine capabilities of two (or more) parents or to add a capability to one of the parent network.

Ex. 1005 ¶¶ 94–96. Paragraphs 97 and 98 go on to provide equations for determining "the off-spring weight vector" by combining the weights of parent A and parent B. *Id.* ¶¶ 97–98; *see* Ex. 2001 ¶ 71.

We agree with Patent Owner and Dr. Saber that these "weights" are numerical values associated with connections among neurons, and the "weight vectors" are merely lists of weights. PO Resp. 13–14; Ex. 2001 ¶¶ 66–67. When input is provided to the neural network, the network uses the weights of its connections in a feedforward calculation manner to provide an output that can include an instruction for operating a device. Ex. 2001 ¶ 66. We agree with and find credible Dr. Saber's testimony that Buibas's merging of weights or weight vectors results in updated network weights, and does not, by itself, disclose the merging of instruction sets for operating a device, or the correlation of the same set of inputs for all or a portion of a circumstance representation with instruction sets for operating two different devices. Ex. 2001 ¶¶ 65, 67, 69–71.

We are not persuaded by Petitioner's reliance on Buibas's disclosure that its network merge can "combine capabilities" of two or more parent networks to teach correlating an input with instruction sets for operating

multiple devices. *See* Pet. 52; Pet. Reply 7–10. For example, Petitioner relies on Buibas's disclosure in paragraph 96 that a network merge may be used "to combine capabilities of two (or more parents) or to add a capability to one of the parent network" and Buibas's disclosure in paragraph 103 that two or more trash collector robots can use an interleaved merge "to produce an off-spring exhibiting combined sets of capabilities." Pet. Reply 9. Buibas's paragraph 96, however, merely states that the merging of weights from parent networks "may be used" to combine capabilities of two or more parents or add a capability to a parent, without providing any detail on how this is carried out or what the relationship is between the updated weights resulting from the combination of networks and any instructions or instruction sets that might be carried out by the device. Ex. 1005 ¶ 96. Similarly, paragraph 103 of Buibas explains that an "interleaved merge" of network weights from two or more trash collector robots can "produce an off-spring exhibiting combined sets of capabilities," without providing any detail as to how this interleaved merge impacts instruction sets for first and second robots. *Id.* ¶ 103. We do not find that Petitioner has pointed to sufficient evidence in the record showing that these disclosures teach a network that correlates a single set of inputs for inputting all or part of a circumstance representation with instruction sets for operating second and third devices.

We also are not persuaded by Dr. Janet's testimony on this point. Dr. Janet states as follows:

> Regardless of how the merge is implemented in practice, a POSITA would have understood from Buibas'[s] explanation that the offspring retains the full capabilities of the parent networks that the offspring would inherit sufficient aspects of the parents that allow it to perform the same functions and thus

> produce equivalent outputs for a given input as the parents (e.g., output instructions sets for operating a second device and additional instructions sets for operating a third device, where those outputs are part of the respective capabilities of the parents). The inherited aspects of the parent networks would include weights, but would also include additional aspects such as additional neurons, activation functions, and the like, to the extent necessary for the offspring to implement the combined capabilities of the parents as described in Buibas.

Ex. 1022 ¶ 17; *see id.* ¶ 16 (describing Buibas's merger operation). Dr. Janet, however, does not sufficiently explain how this merger of networks and updating of weights results in a correlation of a set of inputs for inputting a circumstance representation with instruction sets for operating second and third devices. Dr. Janet also points to the disclosure of network merges in U.S. Patent No. 8,793,205 ("the '205 patent") to a co-inventor of Buibas to argue that one of ordinary skill would have understood that Buibas's merger would involve full copies of the robotic brains of the parent robots. *Id.* ¶ 18. However, Dr. Janet fails to sufficiently explain how the '205 patent demonstrates that it would have been well-known to one of ordinary skill that the merger of Buibas's networks would result in a network that correlates the same set of inputs for inputting all or part of a circumstance representation with outputs for operating multiple devices. *Id.* We also find credible Dr. Saber's testimony that Buibas's disclosure of using a network merge to combine capabilities of the parent networks does not disclose correlating the same inputs with instruction sets for operating multiple devices. Ex. 2001 ¶¶ 67, 69–70.

We also are not persuaded by Petitioner's argument that Buibas teaches not only merging weights but also merging "brain images" which include "not just weights but also the neurons, topology, and pathways of the

network." Pet. Reply 8–10. Even if Petitioner were correct that Buibas discloses combining "brain images" including all of these various network elements, Petitioner fails to point to any disclosure in Buibas that merging these network elements would result in a network that correlates inputs for inputting one circumstance representation with instruction sets for operating multiple devices. *Id.* Petitioner also fails to provide sufficient explanation of how one of ordinary skill would have understood that merging these "brain images" would result in a network that correlates inputs for a circumstance representation with instruction sets for operating multiple devices. *Id.* Dr. Janet states that this merge would result in the offspring having the full capabilities of the parent networks and thus would be able to "perform the same functions and thus produce equivalent outputs for a given input as the parents," which would include "output instructions sets for operating a second device and additional instructions sets for operating a third device" if those were capabilities of the parents. Ex. 1022 ¶ 17. But Dr. Janet does not explain how this necessarily results in one set of inputs for some or all of a circumstance representation being correlated with instructions for operating first and second devices. *Id.* For example, Dr. Janet does not explain why combining a first network with a first set of inputs correlated to instructions for operating a first device and a second, different set of inputs correlated to instructions for operating a second device would, when merged, create an offspring network with a set of inputs for at least a portion of a circumstance representation would be correlated to ***both*** instructions for operating a first device ***and*** instructions for operating a second device. *Id.*

Relatedly, we are not persuaded by Petitioner's reliance on the partitioned neuromorphic apparatus of Buibas's Figure 11D. *See* Pet. Reply 12–13; Ex. 1022 ¶¶ 21–23. As Patent Owner points out, Buibas does not say anything about one partition producing an instruction set for one device and another partition producing an instruction set for another device. *See* PO Sur-reply 9. Dr. Janet testifies that "if the knowledgebase includes multiple partitions, the 'one or more inputs' to the knowledgebase would include the inputs to all the partitions in the knowledgebase," and that those inputs would collectively be "correlated by downstream connections to the outputs of each partition, including instruction sets for operating a second device and additional instruction sets for operating a third device." Ex. 1022 ¶ 23; *see id.* ¶ 21. But Dr. Janet provides no citations to Buibas or other evidence in the record to support this assertion, which is largely conclusory, and we do not see any such teaching in Buibas itself. *Id.* Therefore, we do not find Dr. Janet's testimony persuasive on this point.

The parties also offer conflicting testimony concerning whether merging Buibas's weights would require additional training or retraining the neural network. Ex. 2001 ¶¶ 69, 77–80, 91, 95, 100; Ex. 1022 ¶ 26. After weighing the testimony from both experts, we find that Dr. Saber's testimony is more detailed and more thoroughly explained than Dr. Janet's. We also are not convinced by Dr. Janet's testimony that Buibas's statement that the resulting network would have a "combined set of capabilities" means that further training would not be necessary. *See* Ex. 1022 ¶ 26. As discussed above, we do not find that these portions of Buibas disclose correlating inputs for a circumstance representation with instructions for

operating first and second devices. Thus, we do not find Dr. Janet's testimony on this point to be persuasive.

Additionally, we are not persuaded by Petitioner's alternative argument that, even if one were to accept that Buibas's merge operation merges only network weights, that would still result in combining instruction sets. *See* Pet. Reply 17–18. Dr. Janet acknowledges that "weights and instruction sets are not the same," but asserts that they are nonetheless "interrelated insofar as the output (instruction sets) produced for a given input depends on the weights of connections between the input and the output." Ex. 1022 ¶ 28. However, the fact that weights of neurons and output instruction sets are "interrelated" does not sufficiently explain how the merger of network weights impacts instructions produced at the output of the network. Nor does it mean that merging weights will result in instruction sets for multiple devices being correlated with a set of inputs for a circumstance representation. Therefore, we find that this argument by Petitioner is insufficiently supported in the record.

Finally, we are not persuaded by Petitioner's argument that there is no "criticality or particular significance" to the limitation at issue here, and that the '474 patent's disclosure is no more detailed as to this limitation than Buibas is. *See* Pet. Reply 3–5. Even if that were true, the proper approach for us in this proceeding is to compare the language of claims 56 and 57 to Buibas's disclosure, not to compare the disclosure of the '474 patent to the disclosure of Buibas. Whether the '474 patent Specification provides sufficient support for claims 56 and 57 is not an issue for us to decide.

Consequently, we find that Petitioner has failed to prove, by a preponderance of the evidence, that Buibas discloses or suggests the

limitations of claims 56 and 57. Because Petitioner does not rely on Sinyavskiy for these limitations, we also find that Petitioner has not proven by a preponderance of the evidence that the Buibas-Sinyavskiy combination renders claims 56 and 57 obvious.

E. Ground 1B: Unpatentability of Claim 60 over Buibas in View of Sinyavskiy and Versace

Petitioner asserts that claim 60 would have been obvious over Buibas in view of Sinyavskiy and Versace. Pet. 45–51. Patent Owner does not specifically address claim 60 in its Patent Owner Response. PO Resp. 10–36. After considering the full trial record, we find that Petitioner has proven by a preponderance of the evidence that claim 60 would have been obvious over the Buibas-Sinyavskiy-Versace combination.

F. Ground 2A: Anticipation of Claims 45–47, 51, 59, 68, and 69 Based on Grotmol

Petitioner asserts that claims 45–47, 51, 59, 68, and 69 are anticipated by Grotmol. Pet. 51–72. Patent Owner does not specifically address this ground in its Patent Owner Response. *See* PO Resp. After considering the full trial record, we find that Petitioner has proven by a preponderance of the evidence that claim 45–47, 51, 59, 68, and 69 are anticipated by Grotmol.

G. Grounds 2B and 2D: Obviousness of Claim 60 Based on Grotmol in View of Buibas (Ground 2B) and Grotmol in View of Buibas and McClure (Ground 2D)

Petitioner asserts that claim 60 would have been obvious based on Grotmol in view of Buibas (Ground 2B) and Grotmol in view of Buibas and McClure (Ground 2D). Pet. 73–77, 82–83. Patent Owner does not specifically address these grounds in its Patent Owner Response. *See* PO Resp. After considering the full trial record, we find that Petitioner has

proven by a preponderance of the evidence that claim 60 would have been obvious based on Grotmol in view of Buibas, as set forth in Ground 2B, and Grotmol in view of Buibas and McClure, as set forth in Ground 2D.

H. Ground 2C: Obviousness of Claims 45–47, 51, 56, 57, 59, 68, and 69 Based on Grotmol in View of Buibas

Petitioner asserts that claims 45–47, 51, 56, 57, 59, 68, and 69 would have been obvious based on Grotmol in view of Buibas. Pet. 77–82.

Patent Owner does not direct arguments specifically to claims 45–47, 51, 59, 68, and 69. After considering the full trial record, we find that Petitioner has proven by a preponderance of the evidence that claims 45–47, 51, 59, 68, and 69 would have been obvious over Grotmol in view of Buibas.

With respect to claims 56 and 57, Petitioner relies on Grotmol to disclose a knowledgebase with inputs correlated with instruction sets, and that the trained configurations can be loaded onto other robots. Pet. 80–81. However, Petitioner, does not point to any disclosure in Grotmol that discloses that the inputs to an adaptive controller are correlated with instruction sets learned on a second and third device. *Id.* Instead, Petitioner relies on Buibas to provide the disclosure of correlating inputs for inputting a circumstance representation with instruction sets for operating a second and third device, relying on its arguments based on Buibas in Ground 1A. *Id.* For the reasons discussed previously with respect to claims 56 and 57 in Ground 1A, we find that Buibas does not teach or suggest this limitation. *See* § II.D.6, *supra*. We also find that the portions of Grotmol cited by Petitioner do not teach or suggest this limitation either. Consequently, we find that Petitioner has failed to prove, by a preponderance of the evidence,

that claims 56 and 57 would have been obvious over the combination of Grotmol and Buibas.

I. Patent Owner's Motion to Strike Portions of Petitioner's Reply

Patent Owner filed a motion to strike portions of Petitioner's Reply presenting arguments regarding claims 56 and 57. Paper 23. As discussed above, we have considered the arguments regarding claims 56 and 57 set forth in Petitioner's Reply, and do not find them persuasive. *See* § II.D.6. We therefore deny Patent Owner's Motion to Strike portions of Petitioner's Reply as moot.

III. ANALYSIS OF PROPOSED SUBSTITUTE CLAIMS

Patent Owner's Motion to Amend requests that, if the Board finds claim 45 unpatentable, that it consider substitute claim 85, as well as claims 86–88 and 91, which are the same as original claims 46, 47, 51, and 60 but modified to be dependent on substitute claim 85. MTA 1. Patent Owner also requests that, if the Board finds that claims 56 and 57 have not been shown to be unpatentable, that it consider substitute claims 92 and 93, which correspond to original claims 56 and 57 rewritten in independent form to include the limitations of original claims 45 and 46. *Id.* at 2. Patent Owner requests that if the Board finds claims 56 and 57 unpatentable, the Board consider substitute claims 89 and 90. *Id.* at 1.

A. Illustrative Proposed Amended Claim

Proposed substitute claim 85 is illustrative and is reproduced below showing in underlined language subject matter added to the corresponding original claim, and with Patent Owner's annotations in bracketed text added at the beginning of each claim element to correspond with designation of claim elements.

reproduced below.

[85.pre][5] A first device comprising:

[85.1] a knowledgebase that includes one or more inputs for inputting at least a portion of a circumstance representation, wherein the one or more inputs are correlated with one or more instruction sets for operating a second device;

[85.2] one or more sensors;

[85.3] one or more processors; and

[85.4] one or more non-transitory machine readable media storing machine readable code that, when executed by the one or more processors, causes the one or more processors to perform at least;

[85.5] generating a circumstance representation, wherein the generated circumstance representation represents a circumstance detected at least in part by the one or more sensors;

[85.6] determining one or more instruction sets for operating the second device at least by: inputting at least a portion of the generated circumstance representation into the one or more inputs, and using a correlation between the one or more inputs and the one or more instruction sets for operating the second device; and

[85.7] at least in response to the determining, executing the one or more instruction sets for operating the second device, wherein the first device autonomously performs one or more operations defined by the one or more instruction sets for operating the second device.

<u>[85.8] wherein the knowledgebase includes a neural network, wherein the one or more inputs are one or more input neurons of the neural network,</u>

[5] We use Patent Owner's designations for the elements of claim 85. *See* MTA, Appendix A 1–3.

[85.9] wherein the machine readable code, when executed by the one or more processors, further causes the one or more processors to perform at least:

[85.10] generating a stream of circumstance representations comprising:

[85.11] the generated circumstance representation that (i) includes multiple object representation data structures that each comprises: a label for object type, coordinates for object location, and a computer model for object size, and (ii) represents multiple objects detected at a first time, and

[85.12] another circumstance representation that (i) includes another multiple object representation data structures that each includes: a label for object type, coordinates for object location, and a computer model for object size, and (ii) represents the multiple objects detected at a second time,

[85.13] wherein the determining the one or more instruction sets for operating the second device includes: inputting the multiple object representation data structures of the stream into the one or more input neurons, and using a correlation between the one or more input neurons and the one or more instruction sets for operating the second device; and

[85.14] determining another one or more instruction sets for operating a third device at least by: inputting the another multiple object representation data structures of the stream into the one or more input neurons, and using a correlation between the one or more input neurons and the another one or more instruction sets for operating the third device.

MTA, App. A 1–3.

B. Legal Standard

Petitioner bears the burden of persuasion to show that any proposed substitute claim is unpatentable by a preponderance of the evidence. *Lectrosonics, Inc. v. Zaxcom, Inc.*, IPR2018-01129, Paper 15 (PTAB Feb. 15, 2019) (precedential); 37 C.F.R. § 42.121(d)(2). "Before considering the patentability of any substitute claims, however, the Board first must determine whether the motion to amend meets the statutory and regulatory requirements set forth in 35 U.S.C. § 316(d) and 37 C.F.R. § 42.121." *Lectrosonics*, Paper 15 at 4–8. Patent Owner bears the burden of persuasion to show by a preponderance of the evidence that the motion to amend complies with these requirements. 37 C.F.R. § 42.121(d)(1). Specifically, a patent owner must make an initial showing to demonstrate the following: (1) that a "reasonable number of substitute claims" have been proposed for each challenged claim (35 U.S.C. § 316(d)(1)(B)); (2) that the proposed amendments respond to a ground of unpatentability involved in the trial (37 C.F.R. § 42.121(a)(2)(i)); and (3) the amendments do not seek to enlarge the scope of the claims and do not introduce new matter (35 U.S.C. § 316(d)(3)). *Lectrosonics*, Paper 15 at 4–8.

C. Compliance with the Legal Requirements Set Forth in 35 U.S.C. § 316(d) and 37 C.F.R. § 42.121

Patent Owner bears the burden to ensure that its Motion to Amend complies with the legal requirements set forth in 35 U.S.C. § 316(d) and 37 C.F.R. § 42.121. *Lectrosonics*, Paper 15 at 4, 7–8. For the reasons that follow, we determine that Patent Owner has satisfied that burden.

1. Proposal of a Reasonable Number of Substitute Claims

A motion to amend must "propose a reasonable number of substitute claims." 35 U.S.C. § 316(d)(1)(B); *see also* 37 C.F.R. § 42.121(a)(3) ("A

motion to amend may cancel a challenged claim or propose a reasonable number of substitute claims."). "There is a rebuttable presumption that a reasonable number of substitute claims per challenged claim is one (1) substitute claim." *Lectrosonics*, IPR2018-01129, Paper 15 at 4; *see also* 37 C.F.R. § 42.121(a)(3). Here, Patent Owner proposes no more than one substitute claim for each challenged claim. MTA 1–5, MTA App. A 1–8. Although Patent Owner proposes alternative substitute claims for original claims 56 and 57 depending on whether or not they are found unpatentable, the end result is one substitute claim for each of claims 56 and 57. Petitioner does not argue otherwise. *See generally* MTA Opp.; MTA Sur-reply.

We determine that Patent Owner meets this requirement.

2. Amendments Respond to a Ground of Unpatentability

"A motion to amend may be denied where. . . [t]he amendment does not respond to a ground of unpatentability involved in the trial." 37 C.F.R. § 42.121(a)(2)(i). Here, Patent Owner has responded to a ground of unpatentability involved in this proceeding by amending the claims in response to the Petition's asserted prior art. *See* MTA 5, 19–24, App. A. Petitioner does not argue otherwise. *See generally* MTA Opp.

3. No Enlargement of the Scope of the Claims

An amendment may not seek to enlarge the scope of the claims of the patent. 35 U.S.C. § 316(d)(3); 37 C.F.R. §§ 42.121(b)(1)–(b)(2). Here, Patent Owner's Motion to Amend has not enlarged the scope of the claims of the '474 patent because proposed substitute claims 85–91 retain all limitations of their original corresponding claims 45–47, 51, 56, 57, and 60, and proposed substitute claim 85, from which each of proposed substitute claims 86–91 ultimately depends, further includes additional limitations as

compared to respective original claim 45. *See* MTA 6–7, App. A. Substitute claims 92 and 93 are proposed only to rewrite original claims 56 and 57 into independent form, and retain all the limitations of original claims 56 and 57. *See* Mot. 7, App. A. Therefore, proposed substitute claims 85–93 do not enlarge the scope of the claims of the challenged patent. Petitioner does not argue otherwise. *See generally* MTA Opp.

4. No Introduction of New Matter

An amendment may not introduce new matter. 35 U.S.C. § 316(d)(3); 37 C.F.R. §§ 42.121(b)(1)–(b)(2). New subject matter is any addition to the claims that lacks sufficient support in the subject patent's original disclosure. *See TurboCare Div. of Demag Delaval Turbomach. v. Gen. Elec. Co.*, 264 F.3d 1111, 1118 (Fed. Cir. 2001) ("When [an] applicant adds a claim . . . , the new claim[] . . . must find support in the original specification."). Patent Owner also is required to show written description support in "the original disclosure of the patent for each claim that is . . . amended," and in "an earlier-filed disclosure for each claim for which benefit of the filing date of the earlier filed disclosure is sought." 37 C.F.R. §§ 42.121(b)(1)–(b)(2).

In its Motion to Amend, Patent Owner provides citations to Application No. 17/561,976 ("the '976 application"), from which the '474 patent issued, as well as citations to Application No. 15/340,991, to which the '976 application claims priority through a chain of continuation applications. *See* MTA 7–18; *see also* Ex. 1002, 334:5–12.

Petitioner argues that Patent Owner fails to identify disclosure supporting the claim 85 feature of "inputting the multiple object representation data structures into the input neurons of a neural network for processing as claimed—and particularly not multiple object representation

data structures that include the recited label for object type, coordinates for object location, and computer model for object size." MTA Opp. 23–24 (citing Ex. 1022 ¶ 80). Further, Petitioner argues that support is lacking for "a number of specific nuances recited in Substitute Claim 85, including that the instruction sets are determined using correlations between input neurons and two ***different*** devices (i.e., the second and third devices) for object representation data structures pertaining to the ***same*** 'multiple objects' detected at different times." *Id.* at 24 (citing Ex. 1022 ¶ 81). Specifically, with respect to the second and third devices in proposed substitute claim 85, Petitioner finds fault with Patent Owner's reliance on the embodiments shown in Figures 38 and 39 of the '976 application, which relate, respectively, to what Patent Owner identifies as a "'second device': Loader 98a" and a "'third device': Boat 98b." MTA Opp. 25; MTA 17. Petitioner asserts that "P[atent]O[wner]'s theory would appear to require that (1) the Loader 98a and Boat 98b learned instructions for operating their respective devices based on representations of the same objects, and (2) the first device would need to be capable of executing instructions from both Loader 98a (second device) and Boat 98b (third device)." MTA Opp. 25. Petitioner argues that Patent Owner provides no explanation "that bridges the gap between Figures 38 and 39, or explains how the two devices in these two separate figures would operate as claimed." *Id.*

In our Preliminary Guidance, we preliminarily determined that the '976 application appears to disclose that the multiple object representation data structures that are input to the neurons may include a "label for object type, coordinates for object location, and a computer model for object size," as recited in proposed substitute claim 85. Prelim. Guid. 8–9. Specifically,

we pointed to page 399, lines 1–5 of the ’976 application stating that “[e]xamples of object properties include . . . type of an object . . . location of an object (i.e. distance and bearing/angle from a known point, coordinates, etc.), shape/size of an object (i.e. height, width, depth, computer model, point cloud, etc.) . . . .”

We also preliminarily determined that the ’976 application discloses an embodiment where DCADO Unit 100 communicates with multiple Loaders 98a, and that each of the Loaders 98 can utilize collective knowledge in the DCADO Unit 100 for their autonomous operation. Prelim. Guid. 6–7 (citing Ex. 1002, 489:24, 480:3, 480:26–31, 480:32–481:2, Fig. 38). We preliminarily determined that this disclosure appears to provide written description support for the functionality in proposed substitute claim 85 of: (1) inputting multiple object representation data structures into input neurons and using a correlation between the input neurons and instruction sets for operating a second device; and (b) inputting other multiple object representation data structures into input neurons and using a correlation between the input neurons and another set of instruction sets for operating a third device. Prelim. Guid 78; MTA, App. A 2–3.

In its Reply to the MTA Opposition, Patent Owner points to the neural network shown as Model A in Figure 17 of the ’976 application to support inputting of information into input neurons and Figure 4B to show object representation data structures. MTA Reply 1–3. Patent Owner argues that Model A in Figure 17 shows input neurons correlated using downstream connections with output neurons including instruction sets. *Id.* at 3 (citing MTA 16–17; Ex. 2004, 356:22–26). Patent Owner also contends that the ’976 application discloses “using a correlation between the one or more

input neurons and the one or more instruction sets for operating the" second (or third) device because one of ordinary skill would understand that the instruction sets are provided by the output neurons in Model A. *Id.* at 3–4. Patent Owner also confirmed that it was relying on the '976 application's embodiment using multiple loaders 98a connected to a common DCADO Unit 100. *Id.* at 4–5.

Petitioner responds that Patent Owner's Section 112 arguments are at odds with Patent Owner's arguments against obviousness in its MTA Reply. MTA Sur-reply 12. For example, Petitioner argues, Patent Owner's position "that FIG. 17 of the '474 Patent provides adequate support for 'inputting the multiple object representation data structures of the stream into the one or more input neurons' simply by depicting input neurons cannot be reconciled with the argument that the prior art does not render the same obvious by depicting almost identical structure." *Id.* (citing MTA Reply 2–4; Ex. 1001, Fig. 17; MTA Opp. 7–8; Ex. 1029, Fig. 10A). Petitioner also contends that Patent Owner's argument that claim 85 is supported by the disclosure of the DCADO unit interfacing with multiple loaders conflicts with Patent Owner's argument that the prior art does not teach the added limitations of claim 85. *Id.*

We have considered the full trial record and find that Patent Owner has sufficiently shown that the proposed amended claims find support in the '976 application. Specifically, we find that Patent Owner has shown sufficient support for inputting "object representation data structures" into input neurons, and correlating those inputs with instruction sets at output neurons, based on Figure 4B and Model A in Figure 17 of the '976 application and the accompanying descriptions. *See* MTA Reply 1–4; MTA

16–17; Ex. 2004, 356:22–26. We also find that Patent Owner has sufficiently shown that the '976 application's embodiment using multiple loaders 98a connected to a common DCADO Unit 100 supports determining instruction sets based on correlations between input neurons and two different devices (i.e., second and third devices) for object representation data structures pertaining to the same "multiple objects" detected at different times. *See* MTA Reply 3–5. We are not persuaded by Petitioner's argument that Patent Owner's Section 112 arguments conflict with Patent Owner's arguments that the proposed substitute claims are patentable over the prior art because, as discussed further below, we do not adopt Patent Owner's prior art arguments as to those claims. *See* MTA Sur-reply 12; § II.D, *infra*.

Consequently, we find that Patent Owner has sufficiently shown that the proposed amended claims do not introduce new matter.

5. Summary

For the reasons discussed above, Patent Owner satisfies its burden of persuasion to show that the amendments comply with the applicable statutory and regulatory requirements. *See* 35 U.S.C. § 316(d); 37 C.F.R. § 42.121(d)(1); §§ III.C.1–III.C.4, *supra*.

D. Unpatentability of Proposed Substitute Claims

Petitioner contends that proposed substitute claims 85–91 would have been obvious over either the combination of Grotmol (Ex. 1008) and Zhu

(Ex. 1023), or the combination of Grotmol, Zhu, and Buibas (Ex. 1005).[6] MTA Opp. 1.

1. Unpatentability Based on Grotmol and Zhu

The parties' disputes for the proposed amended claims focus on: (1) limitations [85.11] and [85.12]; and (2) limitations [85.13] and [85.14]. *See* MTA Reply 5–12. We first provide an overview of Grotmol and Zhu, and then proceed to discuss each of these limitations.

a) Overview of Grotmol (Ex. 1008)

Grotmol is titled "Apparatus and Methods for Training Path Navigation by Robots." Ex. 1008, code (54). Grotmol describes an apparatus and methods for training and operating a robotic device to follow a trajectory. *Id.* at code (57).

More specifically, Grotmol describes exemplary mobile robotic apparatus 160, shown in Figure 1 below. Ex. 1008, 8:57–61.

[6] Petitioner does not include proposed substitute claims 92 and 93 in the new obviousness grounds because "Substitute claims 92-93 are identical to original claims 56 and 57 and are unpatentable based on Grounds 1A and 2C as described in the Petition and Reply." MTA Opp. 1 n.1. For the reasons discussed above, however, we find that Petitioner has not proven by a preponderance of the evidence that the Buibas-Sinyavskiy combination (Ground 1A) renders claims 56 and 57 obvious or that the Grotmol-Buibas combination (Ground 2C) renders claims 56 and 57 obvious. *See* §§ II.D.6, II.H, *supra*.

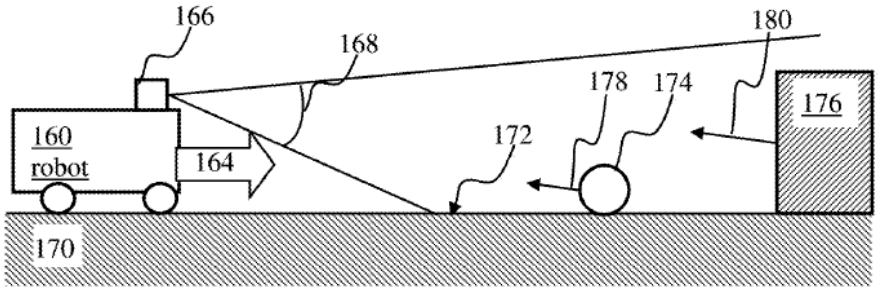

FIG. 1

Figure 1 depicts mobile robotic apparatus 160 that contains sensor component 166. *Id.* Sensor component 166 provides "information associated with objects within the field-of-view 168." *Id.* at 8:64–66. Grotmol's sensor 166 comprises "a camera configured to provide an output comprising a plurality of digital image frames." *Id.* at 10:16–20. A user "may train the system to switch between tasks based on the sensory context." *Id.* at 10:45–47.

Grotmol further describes a "mechanism for enabling a robot to learn navigating a target trajectory while reducing deviation from a target path." Ex. 1008, 38:33–35. The robot comprises robotic vehicle 160, camera 166, and "a controller configured to store a sequence of images obtained during training phase." *Id.* at 38:36–39. Figure 20A from Grotmol is shown below.

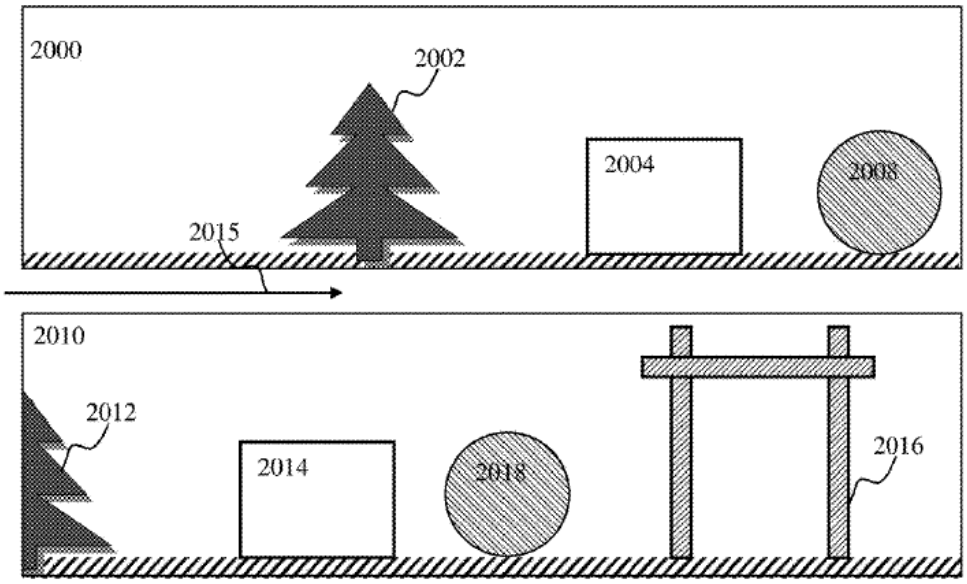

FIG. 20A

Figure 20A illustrates images 2000, 2010 obtained with a camera 166 mounted on a robotic vehicle 160. *Id.* at 38:43–54. Grotmol explains that image 2000 comprises "representations [of] one or more objects, e.g., a tree 2002, a rectangle, a ball 2008, and/or other objects." *Id.* at 38:56–58. Grotmol further explains that image 2010 is obtained after execution of a turn and representations of objects are shifted "relative [to] representations of the same objects in the frame obtained prior to the turn execution." *Id.* at 38:60–65.

During autonomous operation, the control process of the robot is configured to compare a current or recent image with the one or more images from the training buffer. Ex. 1008, 39:23–28. "Motor commands issued by a trainer corresponding to time instances when the images are acquired" and also are stored. *Id.* at 39:17–19. Grotmol explains that motor commands are obtained "by taking the stored motor commands from the training buffer" that correspond to "the best matching stored image." *Id.* at 43:4–9.

b) Overview of Zhu (Ex. 1023)

Zhu is titled "Cross-Validating Sensors of an Autonomous Vehicle," and describes a method and system for cross-validating a second sensor with a first sensor. Ex. 1023, codes (54), (57). Cross-validating the second sensor may include obtaining sensor readings from the first sensor and comparing the sensor readings from the first sensor with sensor readings obtained from the second sensor. *Id.* at code (57). The comparison of the sensor readings may include comparing state information about a vehicle detected by the first sensor and the second sensor, as well as obtaining a first image from the first sensor, obtaining a second image from the second sensor, and then comparing various characteristics of the images. *Id.* Specifically, object labels applied to the vehicle detected by the first and second sensor may be compared. *Id.*

c) Limitations [85.11] and [85.12]

Patent Owner argues that the Grotmol-Zhu combination does not disclose or suggest "multiple object representation data structures that each comprises: . . . coordinates for object location, and a computer model for object size" as recited in limitations [85.11] and [85.12].

Petitioner argues that Grotmol discloses a mobile robot that can capture an image of its environment and detect objects from that image and extract features associated with the detected objects, such as object location and size, that enable comparison to stored features. MTA Opp. 10 (citing Pet. 63–64; Ex. 1008, 9:41–42, 21:41–43, 28:19–40, 38:43–39:28; Ex. 1022 ¶ 59).

Petitioner combines Grotmol with Zhu, which, according to Petitioner, describes techniques for classifying objects detected in a vicinity

of an autonomous vehicle at a given time and generating, for each object, a label for object type, coordinates for object location, and a computer model for object size. MTA Opp. 11 (citing Ex. 1022 ¶ 60). For example, Petitioner argues that Zhu discloses labeling the object type for each object by generating "such classifications as 'passenger car,' 'bicycle,' 'motorcycle,' and other such classifications" that indicate "the ***type*** of vehicle detected by a given sensor." *Id.* (citing Ex. 1023,[7] 11:16–36, 14:43–52 ("may apply an object label to the detected object"), 10:58–64 (data 112 defining parameters for "the ***type*** of object detected by the sensor")). According to Petitioner, Zhu's system is also configured to "define[] . . . a bounding box encompassing the object," where "object label parameters may include a height parameter that defines the height of the bounding box (e.g., in pixels), a width parameter that defines the width of the bounding box (e.g., in pixels), a first pixel coordinate that defines the latitudinal placement of the bounding box (e.g., an X-coordinate), and a second pixel coordinate that defines the longitudinal placement of the bounding box (e.g., a Y-coordinate)." *Id.* at 11–12 (citing Ex. 1023, 14:43–67, 15:1–20, Figs. 9–10). Thus, Petitioner contends, Zhu defines coordinates for the location of each object, and a computer model in the form of a bounding box and associated width/height parameters, for each object's size, as shown in Petitioner's annotated version of Zhu's Figure 9, reproduced below.

[7] Petitioner cites to Exhibit 1024, but this appears to be a typographical error, as the referenced portions are from Zhu, which is Exhibit 1023. MTA Opp. 11; Exs. 1023, 1024.

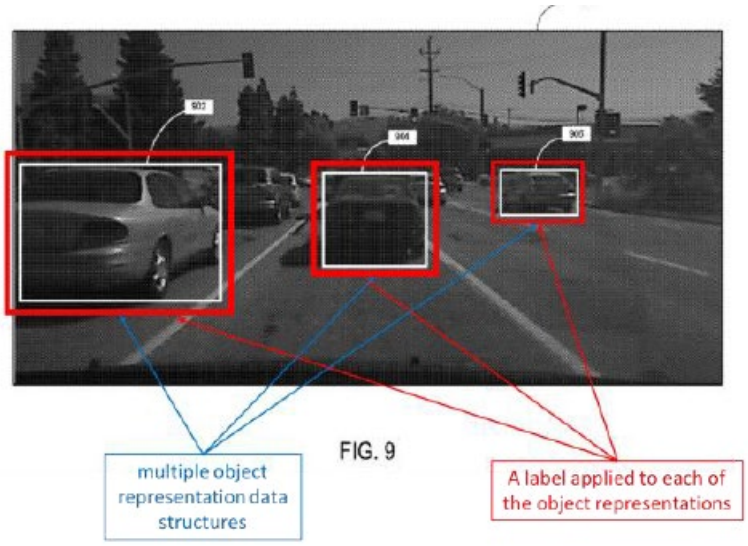

Id. at 12 (citing Ex. 1023, Fig. 9; Ex. 1022 ¶ 60).

Petitioner argues that Zhu teaches that the parameters associated with each object can be stored in respective object representation data structures such as the "label" or "bounding box" for each object. MTA Opp. 12 (citing Ex. 1023, 14:54–15:20 ("An object label may have one or more object label parameters that define the shape of the object label."). According to Petitioner, Zhu further explains that such data can be stored in any suitable "data structure" such as "a relational database," "a table having a plurality of different fields and records," or "XML documents." *Id.* (citing Ex. 1023, 6:8–25); Ex. 1022 ¶¶ 61–62.

Patent Owner responds that limitations [85.11] and [85.12] recite "object representation data structures" comprising "coordinates for object location" and "model for object size," and that these object representation data structures are part of a "circumstance representation," which "represents a circumstance detected by one or more ***actual, real-world*** sensors for detecting objects and their properties." MTA Reply 6 (citation omitted). According to Patent Owner, one of ordinary skill "would have understood that the object (and its properties) that is detected by the

sensor(s) is an ***actual, real-world object*** in the surroundings of the first device." *Id.* (citing Ex. 1001, 56:1–3, Figs. 4A–4B); Ex. 2006 ¶ 27). Patent Owner argues that Zhu does not satisfy this requirement because its "bounding box" has a height and width in pixels in an image, which is not the object's actual size, and the bounding box's location is defined by first and second pixel coordinates in the image, which is not the object's actual coordinates. *Id.* at 6–7. Thus, Patent Owner contends, Zhu's bounding boxes show "representations of objects" in an image coordinate system, not "coordinates for location and model for size" of the actual, real-world objects. *Id.* at 7. Patent Owner asserts that the relevant claim language does not recite coordinates for ***object representation location*** and model for ***object representation size***, as Zhu discloses, but rather recites "coordinates for ***object*** location" and a "computer model for ***object*** size." *Id.* Patent Owner also argues that Petitioner's mapping of the claim language is inconsistent because it relies on the type of the actual, real-world object (vehicle) to satisfy the "label for object type" language, but relies on image representations in the form of bounding boxes for the language reciting "coordinates for object location" and a "model for object size." *Id.* at 8.

Petitioner responds that Patent Owner ignores Petitioner's reliance on Grotmol, which discloses detecting "object size" and "location," which correspond to the actual size and location of the detected objects. MTA Sur-reply 2–3 (citing MTA Opp. 10–11; Ex. 1008, 9:41–42, 10:23–34, 28:19–40, 39:13–28, 21:41–43). Petitioner also argues that Zhu discloses parameters of the bounding boxes that characterize the actual size and location of detected objects using ***physical*** units of the object in the real world, and that the size and coordinate location of a bounding box for an

object depicted in an image reflects the size and coordinate location of an actual object in the real world. *Id.* at 4–6. Finally, Petitioner argues that its mapping is not inconsistent because Petitioner mapped "object representation data structures" to both Zhu's "labels" and Zhu's "bounding boxes," which terms Zhu uses interchangeably. *Id.* at 8.

Based on the full trial record, we find that Petitioner has sufficiently proven that limitations [85.11] and [85.12] are taught by the Grotmol-Zhu combination. First, we agree with Petitioner that Grotmol discloses detecting the "object size" and "object location," and that these correspond to the actual size and location of the detected objects. *See* MTA Opp. 10–11; MTA Sur-reply 2–3. For example, Grotmol states that "[t]he tasks of the robot may be configured based on a context" and "the contact may comprise . . . state of the environment (e.g., object size, location)." Ex. 1008, 10:23–32; *see id.* at 28:19–40 ("[T]he term feature may be used to describe . . . values characterizing the input, e.g., the presence or absence of . . . [an] object, at particular locations in the image" including "properties of the mentioned features such as size, . . . position.").

Second, we agree with Petitioner that Zhu's bounding boxes indicate the actual size and location of detected objects because Zhu uses physical units of the objects in the real world to characterize the actual, real-world size and location of detected objects. *See* MTA Opp. 11–12; MTA Sur-reply 4–5. For example, Zhu explains that "the object label parameters may also include a third pixel coordinate that defines ***the physical height of the object***," for example in meters, "e.g., 3 meters above sea level, 2 meters above sea level, etc." Ex. 1023:15:1–20 (emphasis added). Zhu also explains that object labels, such as bounding boxes, can be "measured in

physical units (e.g., centimeters, meters, etc.)," and that these labels can be "based on the physical characteristics of the object encompassed by the object label." *Id.* at 20:34–40.

Third, we agree with Petitioner that, even if Zhu's disclosure was limited to parameters defining the location and size of an object in an image in pixels, those parameters would still be indicative of "object size" and "object location" because the position of the bounding box directly corresponds to the object's actual position in the real world, and the size of the bounding box is directly correlated with the physical size of the object. *See* MTA Sur-reply 5–6; Ex. 1023, Fig. 9.

Finally, we do not agree with Patent Owner's argument that the Petitioner's mapping of the claim language is inconsistent. *See* MTA Reply 8. Petitioner's Opposition mapped "object representation data structures" to both Zhu's "labels" and Zhu's "bounding boxes," and Zhu uses these terms interchangeably. MTA Opp. 11–13, MTA Sur-reply 8. For example, Zhu states that "the shape of the object ***label*** is a ***bounding box***," and that this label includes information such as mapped object classifications. Ex. 1023, 14:43–15:20 (emphasis added), 10:58–11:36, 14:43–52. Therefore, we do not see a fatal inconsistency in Petitioner's mapping.

d) Limitations [85.13] and [85.14]

Patent Owner argues that the Grotmol-Zhu combination does not disclose or suggest "inputting the multiple object representation data structures of the stream into the one or more input neurons," as recited in limitation [85.13], or "inputting the another multiple object representation data structures of the stream into the one or more input neurons," as recited in limitation [85.14]. MTA Reply 9.

Petitioner argues that Grotmol uses a correlation between the one or more inputs of the adaptive controller and instruction sets learned by the adaptive controller to determine instruction sets for operating the robot. MTA Opp. 14. Petitioner asserts that Grotmol discloses that the adaptive controller can be implemented using a neural network having one or more input neurons, and in such embodiments, features of the sensory input would be inputted into the input neurons. *Id.* at 15. According to Petitioner, one of ordinary skill would have found it obvious to: (1) input multiple object representation data structures for the objects detected at a first time (as in limitation [85.11]) into the input of the neural network for the benefit of obtaining a first control output conditioned on the first input; and (2) input other object representation data structures for the objects detected at a second time (as in limitation [85.12]) into the input neurons of the neural network for the benefit of obtaining a second control output conditioned on the second input. *Id.* at 15–16.

Patent Owner responds that Grotmol does not actually disclose the claimed inputting of object representation data structures into input neurons but rather merely concludes that it would have been obvious. MTA Reply 10. Patent Owner argues that the knowledge of a person of ordinary skill may only be used to supply a missing claim limitation where that limitation is "unusually simple and the technology particularly straightforward," and that this limitation does not satisfy those conditions. *Id.* at 10–11. To the contrary, according to Patent Owner, it would have been complex to replace the input of Grotmol's images or image features into a neural network with the object representation data structures of claim 85 "due to the complexities associated with a substantially different structure of the neural network to

accommodate completely different inputs, training with a completely different type of inputs, and significant trial and error required to make the neural network workable and provide correct outputs." *Id.* (citing Ex. 2006 ¶ 34). Patent Owner also argues that Petitioner's proposed modification of Grotmol would have resulted in an inoperable system because Grotmol's input neurons accept pixels of an image or image features, not object representation data structures. *Id.* at 11–12 (citing Ex. 2006 ¶¶ 35–36). According to Patent Owner, a neural network for a different type of inputs was in practice not modified, but was primarily built anew. *Id.* at 12 (citing Ex. 2006 ¶ 36).

Petitioner responds that Patent Owner's argument fundamentally misunderstands Grotmol because Grotmol does not limit the input of its neural network to only images and image features, but rather discloses that the inputs can include a wide variety of types of information including, for example, object size and position. MTA Sur-reply 9–10. Petitioner also argues that an "object representation data structure" can be represented by image features, like those of Grotmol and Zhu. *Id.* at 10.

Based on the full trial record, we find that Petitioner has sufficiently proven that limitations [85.13] and [85.14] are taught by the Grotmol-Zhu combination. The parties do not appear to dispute that Grotmol discloses implementing the adaptive controller using a neural network having input neurons. *See* MTA Opp. 15; MTA Reply 9–12. We agree with Petitioner that the inputs to Grotmol's neural network are not limited to pixels, but also include a variety of other features and information relating to an image. MTA Opp. 2–8; MTA Sur-reply 9–10. For example, Grotmol discloses that its features can include a wide variety of information including properties

such as object size, object orientation, positions of object features, or changes in object position across consecutive frames. Ex. 1008, 28:19–40; *see id.* at 39:19–22 ("Additional sensory information (e.g., vehicle motion information, ambient environment information, vehicle operational parameters) corresponding to time instances when the images are acquired may be stored.").

Petitioner also relies on Zhu's features, such as classification/type of the object, and the object size and location using a bounding box. MTA Opp. 2–3. We find that these features disclosed in both Grotmol and Zhu can be considered "object representation data structures" as claimed. Indeed, Zhu explains that its data can be stored in any suitable "data structure," such as "a relational database," "a table having a plurality of different fields and records," or "XML documents." Ex. 1023, 6:8–25; *see* MTA Opp. 12; Ex. 1022 ¶¶ 61–62.

Therefore, we find that the Grotmol-Zhu combination discloses inputting object representation data structures into the input neurons of a neural network.

e) Remaining Added Limitations of Claim 85

Petitioner sets forth contentions and evidence for why the Grotmol-Zhu combination satisfies the remaining aspects of limitations [85.8]–[85.14]. MTA Opp. 6–19. Patent Owner does not provide specific argument directed to these remaining limitations. MTA Reply 5–12. Based on Petitioner's arguments and evidence, which we adopt, we find that Petitioner has sufficiently proven that the these limitations would have been obvious based on the Grotmol-Zhu combination.

f) Conclusion as to Proposed Substitute Claim 85

For the reasons set forth above, we find that Petitioner has proven by a preponderance of the evidence that proposed substitute claim 85 would have been obvious over the Grotmol-Zhu combination.

g) Proposed Substitute Claims 86–88 and 91

Petitioner sets forth contentions and evidence for why proposed substitute claims 86–88 and 91 would have been obvious over the Grotmol-Zhu combination. MTA Opp. 21–22. Patent Owner does not provide specific arguments directed to these proposed substitute claims. MTA Reply 5–12. Based on Petitioner's arguments and evidence, which we adopt, we find that Petitioner has sufficiently proven by a preponderance of the evidence that proposed substitute claims 86–88 and 91 would have been obvious based on the Grotmol-Zhu combination.

2. Unpatentability Based on Grotmol, Zhu, and Buibas

Petitioner also argues that proposed substitute claims 85–88 and 91 would have been obvious over the combination of Grotmol, Zhu, and Buibas. MTA Opp. 6–22. Patent Owner does not present separate argument directed specifically at the Grotmol, Zhu, and Buibas combination, but instead relies on its arguments with respect to the Grotmol-Zhu combination discussed above. MTA Reply 12. Based on Petitioner's arguments and evidence, which we adopt, we find that Petitioner has sufficiently proven by a preponderance of the evidence that proposed substitute claims 85–88 and 91 would have been obvious based on the Grotmol-Zhu-Buibas combination.

E. Patent Owner's Motion to Strike Portions of Petitioner's Sur-reply to Patent Owner's Motion to Amend

Patent Owner filed a motion to strike portions of Petitioner's Sur-reply to the Motion to Amend, specifically pages 5–7. Paper 36 ("Mot. to Strike MTA Sur-reply").

First, Patent Owner argues that Petitioner's MTA Sur-reply newly cites and relies on portions of Zhu explaining how its bounding boxes can be measured in physical units. Mot. to Strike MTA Sur-reply 2. However, Petitioner's MTA Opposition specifically cited portions of Zhu, including column 15, lines 1–20, which describe coordinates of the object in meters. MTA Opp. 4–5, 12. We find that Petitioner's additional citations and argument in its MTA Sur-reply is a permissible additional explanation of Zhu's disclosures on object size and location and permissibly responds to the arguments in Patent Owner's MTA Reply that Zhu fails to disclose actual, real-world object size and location. *See* MTA Reply 5–9. Therefore, we deny this portion of Patent Owner's Motion to Strike

Patent Owner also argues that page 6 of Petitioner's MTA Sur-reply improperly relied on Zhu's column 8, lines 39–46 and column 9, line 57 through column 10, line 11 to argue that Zhu discloses "distances of detected objects to the vehicle" and "3D images." Mot. to Strike MTA 2–3. Patent Owner also argues that pages 6–7 of Petitioner's MTA improperly relied on new arguments and evidence regarding Zhu's disclosure of "objects being represented in a 'point cloud image.'" *Id.* at 3. Because we do not rely on these portions of Zhu (or Petitioner's arguments based thereon) in reaching our conclusions that proposed amended claim 85 is unpatentable, we deny these portions of Patent Owner's Motion to Strike as moot.

IV. CONCLUSION[8]

Petitioner has proved by a preponderance of the evidence that original claims 45–47, 51, 59, 60, 68, and 69 of the '474 patent are unpatentable. Petitioner has not proven by a preponderance of the evidence that original claims 56 and 57 are unpatentable. The outcome for the challenged claims is set forth in the table below. In summary:

Claims	35 U.S.C. §	Reference(s)/ Basis	Claims Shown Unpatentable	Claims Not shown Unpatentable
45–47, 51, 56, 57, 59, 68, 69	103	Buibas, Sinyavskiy	45–47, 51, 59, 68–69	56, 57
60	103	Buibas, Sinyavskiy, Versace	60	
45–47, 51, 59, 68, 69	103	Grotmol	45–47, 51, 59, 68, 69	
60	103	Grotmol, McClure	60	
45–47, 51, 56, 57, 59, 68, 69	103	Grotmol, Buibas	45–47, 51, 59, 68, 69	56, 57

[8] Should Patent Owner wish to pursue amendment of the challenged claims in a reissue or reexamination proceeding subsequent to the issuance of this decision, we draw Patent Owner's attention to the April 2019 *Notice Regarding Options for Amendments by Patent Owner Through Reissue or Reexamination During a Pending AIA Trial Proceeding.* *See* 84 Fed. Reg. 16,654 (Apr. 22, 2019). If Patent Owner chooses to file a reissue application or a request for reexamination of the challenged patent, we remind Patent Owner of its continuing obligation to notify the Board of any such related matters in updated mandatory notices. *See* 37 C.F.R. § 42.8(a)(3), (b)(2).

Claims	35 U.S.C. §	Reference(s)/ Basis	Claims Shown Unpatentable	Claims Not shown Unpatentable
60	103	Grotmol, Buibas, McClure	60	
Overall Outcome			45–47, 51, 59, 60, 68, 69	56, 57

Motion to Amend Outcome	Claims
Original Claims Cancelled by Amendment	
Substitute Claims Proposed in Amendment	85–93
Substitute Claims: Motion to Amend Granted	92, 93
Substitute Claims: Motion to Amend Denied	85–88, 91
Substitute Claims: Not Reached	89, 90[9]

V. ORDER

In consideration of the foregoing, it is hereby:

ORDERED that Petitioner has shown by a preponderance of the evidence that claims 45–47, 51, 59, 60, 68, and 69 of the ’474 patent are unpatentable;

[9] As noted above, Patent Owner requests that the Board consider proposed substitute claims 89 and 90 if the Board finds claims 56 and 57 unpatentable. MTA 1. Because we find that claims 56 and 57 have not been shown to be unpatentable, we do not consider substitute claims 89 and 90 in this Decision.

FURTHER ORDERED that Petitioner has not shown by a preponderance of the evidence that claims 56 and 57 of the ’474 patent are unpatentable;

FURTHER ORDERED that Petitioner has shown by a preponderance of the evidence that proposed substitute claims 85–88 and 91 are unpatentable and Patent Owner’s request to issue substitute claims 85–88 and 91 is *denied*;

FURTHER ORDERED that Patent Owner’s request to substitute claims 92 and 93 for claims 56 and 57 is granted;

FURTHER ORDERED that Patent Owner’s request to substitute claims 89 and 90 for claims 56 and 57 is denied as moot because we have found that Petitioner has not proven that claims 56 and 57 are unpatentable; and

FURTHER ORDERED that, because this is a Final Written Decision, parties to the proceeding seeking judicial review of the decision must comply with the notice and service requirements of 37 C.F.R. § 90.2.

FOR PETITIONER:

W. Karl Renner
Nicholas Stephens
Roberto Devoto
FISH & RICHARDSON P.C.
axf-ptab@fr.com
nstephens@fr.com
devoto@fr.com

Ashraf Fawzy
TESLA, INC.
afawzy@tesla.com

FOR PATENT OWNER:

Arvind Jairam
Scott Hejny
Stuart McCommas
George Fishback
MCKOOL SMITH, P.C.
ajairam@mckoolsmith.com
shejny@mckoolsmith.com
smccommas@mckoolsmith.com
gfishback@mckoolsmith.com