IN THE UNITED STATES PATENT AND TRADEMARK OFFICE

_____

BEFORE THE PATENT TRIAL AND APPEAL BOARD

_____

QORVO, INC.,

Petitioner,

v.

CORNELL RESEARCH FOUNDATION, INC.,

Patent Owner.

_____

Case No. IPR2024-00758

U.S. Patent No. 7,250,360

_____

PETITION FOR *INTER PARTES* REVIEW OF U.S. PATENT NO. 7,250,360

TABLE OF CONTENTS

I. INTRODUCTION 1
II. MANDATORY NOTICES (37 C.F.R. §42.8(A)(1)) 2
III. GROUNDS FOR STANDING (37 C.F.R. §42.104(A)) 3
IV. IDENTIFICATION OF CHALLENGE (37 C.F.R. §42.104(B)) 4
A. Citation of Prior Art 4
B. Statutory Grounds for the Challenge 5
V. TECHNOLOGY OVERVIEW 5
VI. THE '360 PATENT 6
A. Overview of the '360 Patent 6
B. Prosecution History Summary 7
C. Level of Ordinary Skill in the Art 8
D. Claim Construction 8
VII. OVERVIEW OF THE APPLIED REFERENCES 10
A. Urashima 10
B. Nagata 11
C. Keiper 11
D. Manabe 12
E. Guo 12
F. Ashby 13
VIII. GROUNDS OF UNPATENTABILITY 13
A. Ground 1: Urashima renders obvious claims 1-4 and 6-14. 14
1. Independent Claim 1 14
2. Dependent Claim 2 22
3. Dependent Claim 3 23
4. Dependent Claim 4 23
5. Dependent Claim 6 23
6. Dependent Claim 7 23

7. Dependent Claim 8 24
8. Dependent Claim 9 24
9. Dependent Claim 10 24
10. Dependent Claim 11 25
11. Dependent Claim 12 25
12. Dependent Claim 13 26
13. Dependent Claim 14 26

B. Ground 2: The combination of Urashima and Nagata renders obvious claims 5 and 17. 26
1. A POSA would have been motivated to combine Urashima and Nagata. 26
2. Dependent Claim 5 31
3. Dependent Claim 17 31

C. Ground 3: The combination of Urashima and Keiper renders obvious claims 15 and 16. 32
1. A POSA would have been motivated to combine Urashima and Keiper. 32
2. Dependent Claim 15 36
3. Dependent Claim 16 36

D. Ground 4: The combination of Urashima and Manabe renders obvious claims 18-24. 36
1. A POSA would have been motivated to combine Urashima and Manabe. 36
2. Independent Claim 18 41
3. Dependent Claim 19 46
4. Dependent Claims 20-24.....47

E. Ground 5: Guo renders obvious claims 1-4, 6-9, and 11-14. 47
1. Independent Claim 1 47
2. Dependent Claim 2 54
3. Dependent Claim 3 55

4. Dependent Claim 4 55
5. Dependent Claim 6 56
6. Dependent Claim 7 56
7. Dependent Claim 8 57
8. Dependent Claim 9 57
9. Dependent Claim 11 58
10. Dependent Claim 12 58
11. Dependent Claim 13 59
12. Dependent Claim 14 60

F. Ground 6: The combination of Guo and Ashby renders obvious claims 5, 10, and 17.....60

1. A POSA would have been motivated to combine Guo and Ashby. 60
2. Dependent Claim 5 64
3. Dependent Claim 10 65
4. Dependent Claim 17 66

IX. DISCRETIONARY CONSIDERATIONS UNDER 314(A) AND 325(D) STRONGLY FAVOR INSTITUTION 66

A. The *Advanced Bionics* Factors Favor Institution 67

B. The *General Plastics* Factors Favor Institution 67

C. The *Fintiv* Factors Favor Institution 68

X. CONCLUSION.....71

CLAIM APPENDIX 72

EXHIBIT LIST

Exhibit No.	Description
1001	U.S. Patent No. 7,250,360 to Shealy et al. ("'360 patent")
1002	'360 Patent Prosecution History (U.S. Application No. 11/069,040
1003	Declaration of Dr. Stan Shanfield
1004	U.S. Patent Application Pub. No. 2002/0155712 to Urashima et al. ("Urashima")
1005	JP Patent Application Pub. No. JPH0563305 to Nagata et al. ("Nagata") with certified translation
1006	Keiper et al., Metal organic vapour-phase epitaxy (MOVPE) growth of InP and InGaAs using tertiarybutylarsine (TBA) and tertiarybutylphosphine (TBP) in N2 ambient, Journal of Crystal Growth (1999) ("Keiper")
1007	U.S. Patent No. 5,122,845 to Manabe et al. ("Manabe")
1008	U.S. Patent Application Pub. No. 2004/0119063 to Guo et al. ("Guo")
1009	U.S. Patent Application Pub. No. 2002/0090816 to Ashby et al. ("Ashby")
1010	Declarations of Sylvia Hall-Ellis, Ph.D.
1011	Herman et al., Epitaxy Physical Principles and Technical Implementation, Material Science (2004) ("Herman")
1012	Curriculum Vitae of Sylvia Hall-Ellis, Ph.D.
1013	Curriculum Vitae of Dr. Stan Shanfield
1014	Docket Sheet, *Akoustis Technologies, Inc. et al. v. Qorvo, Inc.*, Case No. 2:23-cv-00180 (E.D. Tex.)
1015	Zhang et al., Selective Growth of CdTe on Si and GaAs Substrates using Metalorganic Vapor Phase Epitaxy, Journal of Electronic Materials (2000) ("Zhang")
1016	Uen et al., Epitaxial growth of high-quality GaNon appropriately nitridated Si substrate by metal organic chemical vapor deposition, Journal of Crystal Growth (2005) ("Uen")

Exhibit No.	Description
1017	First Amended Docket Control Order, *Akoustis Technologies, Inc. et al. v. Qorvo, Inc.*, Case No. 2:23-cv-00180 (E.D. Tex.), August 10, 2023
1018	Lex Machina List of Open Cases for Judge James Rodney Gilstrap, February 27, 2024
1019	Trifan, Study of the Early Stage of Growth and Epitaxy of GaN Thin Films on Sapphire, College of Arts and Sciences of Ohio University (2003) ("Trifan")
1020	Connelly, Nomenclature of Inorganic Chemistry, International Union of Pure and Applied Chemistry (2005) ("Connelly")
1021	Zang et al., Structural analysis of metalorganic chemical vapor deposited AlN nucleation layers on Si (111), Journal of Crystal Growth (2004) ("Zang")
1022	Nikishin et al., Growth of AlGaN on Si(111) by gas source molecular beam epitaxy, Applied Physics Letters (2000) ("Nikishin")
1023	Nikishin et al., High quality GaN grown on Si(111) by gas source molecular beam epitaxy with ammonia Applied Physics Letters (1999) ("Nikishin II")
1024	Chen et al., Growth of high quality GaN layers with AlN buffer on Si(111) substrates, Journal of Crystal Growth (2001) ("Chen")
1025	Marchand et al., Metalorganic chemical vapor deposition of GaN on Si(111): Stress control and application to field-effect transistors, Journal of Applied Physics (2001) ("Marchand")
1026	Park et al., Growth of GaN Layer from the Single-Source Precursor (Et2GaNH2)3, Chemical Materials (1998) ("Park")
1027	Hull et al., Misfit Dislocations in Lattice-Mismatched Epitaxial Films, Critical Review in Solid State and Material Sciences (1992) ("Hull")
1028	Time to Milestone Information for E.D. Texas from Docket Navigator

Exhibit No.	Description
1029	Akoustis' Original Complaint (Docket No. 01) in *Akoustis Technologies, Inc. et al. v. Qorvo, Inc.*, Case No. 2:23-cv-00180 (E.D. Tex.)
1030	Qorvo's (Redacted) Motion to Dismiss (Docket No. 24) in *Akoustis Technologies, Inc. et al. v. Qorvo, Inc.*, Case No. 2:23-cv-00180 (E.D. Tex.)
1031	Qorvo and Akoustis' Preliminary Claim Constructions in *Akoustis Technologies, Inc. et al. v. Qorvo, Inc.*, Case No. 2:23-cv-00180 (E.D. Tex.)

I. INTRODUCTION

Qorvo, Inc. ("Petitioner") petitions for *inter partes* review of claims 1-24 of U.S. Patent No. 7,250,360 ("the '360 patent").

The '360 patent claims a "process for the nucleation and subsequent epitaxial growth on a lattice mismatched substrate." EX1001, 1:39-41. The '360 patent admits that multiple "commonly accepted practice[s] for nucleation of these substrates" were known and used well before the '360 patent. *Id*., 1:29-31. The '360 patent's only purported advancement over these practices was to allegedly implement the nucleation process as a "**single step** [using] a single flow, single pressure, high temperature process,"[1] instead of a **two-step** process that utilized "a two-temperature process" and "different growth pressures [during] certain steps in the nucleation process." *Id*., 1:29-33, 2:3-4.

However, there are two fundamental problems with the '360 patent's alleged point of novelty. First, the use of a "single pressure" is **not** recited in any claim of the '360 patent, and the use of a single high temperature throughout the growth process is only recited in a single **dependent** claim (claim 12). Second, even if the '360 patent's alleged point of novelty was fully recited in the independent claims,

[1] Emphasis added throughout unless otherwise noted

the references applied herein disclose and/or render obvious this alleged point of novelty, as well as each and every other feature recited in the claims.

This Petition demonstrates that each challenged claim is unpatentable based on a small subset of the patents and publications disclosing or rendering obvious the ’360 patent’s alleged single-step process, and is supported by the Declaration of Dr. Stan Shanfield (EX1003), who has over 35 years of experience working with nucleation and epitaxial growth processes.

U.S. Patent Application Pub. Nos. 2002/0155712 to Urashima et al. (“Urashima”) and 2004/0119063 to Guo et al. (“Guo”), alone or used in various combinations, teach each and every limitation of the challenged claims of the ’360 patent. Unfortunately however, neither Urashima and Guo—nor any of the other prior-art references relied on herein—were previously before the Office. If they had been, the ’360 patent would not have been allowed. Accordingly, the Board should institute this proceeding and find claims 1-24 of the ’360 patent unpatentable.

II. MANDATORY NOTICES (37 C.F.R. §42.8(A)(1))

REAL PARTY-IN-INTEREST: The real party-in-interest is Petitioner Qorvo, Inc. No other parties directed, controlled, or funded this IPR proceeding.

RELATED MATTERS: The ’360 patent is the subject of *Akoustis Technologies, Inc. et al. v. Qorvo, Inc*., Case No. 2:23-cv-00180 (E.D. Tex.), filed

April 20, 2023 (the "*Akoustis-Qorvo* litigation"). Petitioner is the Defendant in that matter. The '360 patent is also the subject of a challenge in *IQE PLC v. Cornell Research Foundation, Inc.*, IPR2024-00609, filed March 1, 2024.

LEAD AND BACKUP COUNSEL: Under 37 C.F.R. §§42.8(b)(3) and 42.10(a), Petitioner designates Robert M. Masters (Reg. No. 35,603) as lead counsel; and Timothy Cremen (Reg. No. 50,855), and Jonathan R. DeFosse (*pro hac vice* to be requested) as back-up counsel, each of Sheppard, Mullin, Richter & Hampton LLP.

SERVICE INFORMATION: Petitioner consents to electronic service by email at LegalTM-Qorvo-IPR@sheppardmullin.com. Petitioner's counsel may also be served by mail or hand delivery at Sheppard, Mullin, Richter & Hampton LLP, 2099 Pennsylvania Avenue, NW, Suite 100, Washington, DC 20006-6801. Petitioner's counsel may be reached by telephone at 202.747.1900 and by facsimile at 202.747.1901.

Fees: Petitioner paid the required fees. The Office is authorized to charge any fee deficiency, or credit any overpayment, to Deposit Account No. 50-4561.

III. GROUNDS FOR STANDING (37 C.F.R. §42.104(A))

The undersigned and Petitioner certify that the '360 patent is available for *inter partes* review. Petitioner is not barred or estopped from requesting *inter partes* review on the grounds herein.

IV. IDENTIFICATION OF CHALLENGE (37 C.F.R. §42.104(B))

A. Citation of Prior Art

The '360 patent's earliest possible priority date is March 2, 2005. EX1001, (22). All references relied upon herein are prior art as of March 2, 2005 under pre-AIA U.S.C. §102.

Urashima (EX1004) has a PCT filing date of August 17, 2001 and published October 24, 2002. Urashima is prior art at least under 35 U.S.C. §§102(a)/(b).

Nagata (JP Patent No. JPH0563305; EX1005) was filed on March 26, 1991, and published March 12, 1993. Nagata is prior art at least under 35 U.S.C. §§102(a)/(b).

Keiper (*Metal organic vapour-phase epitaxy (MOVPE) growth of InP and InGaAs using tertiarybutylarsine (TBA) and tertiarybutylphosphine (TBP) in N2 ambient*, Keiper et al. (Journal of Crystal Growth 1999); EX1006) published in July 1999 and is prior art under at least §§102(a)/(b). Keiper was published in Volume 204 of the Journal of Crystal Growth in July 1999 by an established publisher, Elsevier, with a 1999 copyright date. EX1006, Keiper, 256; *VidStream LLC v. Twitter, Inc*., 981 F.3d 1060, 1065 (Fed. Cir. 2020) ("established publisher"). Exhibit 1010 is a signed declaration from Sylvia Hall-Ellis, Ph.D., attesting to the public availability of Keiper. EX1010 evidences Keiper was

disseminated and publicly accessible to interested persons in the industry at least by July 1999, and as such, Keiper qualifies as prior art under §102. *In re Wyer*, 655 F.2d 221, 227 (C.C.P.A. 1981); *Bruckelmyer v. Ground Heaters, Inc.*, 445 F.3d 1374, 1378 (Fed. Cir. 2006).

Manabe (U.S. Patent No. 5,122,845; EX1007) was filed on February 26, 1990 and issued June 16, 1992. Manabe is prior art at least under 35 U.S.C. §§102(a)/(b).

Guo (EX1008) was filed on November 25, 2003 and published June 24, 2004. Guo is prior art at least under 35 U.S.C. §102(a).

Ashby (U.S. Patent Application Pub. No. 2002/0090816; EX1009) was filed on January 3, 2001 and published July 11, 2002. Therefore, Ashby is prior art at least under 35 U.S.C. §§102(a)/(b).

B. Statutory Grounds for the Challenge

Ground	Basis	Claims	References
1.	§103	1-4 and 6-14	Urashima
2.	§103	5 and 17	Urashima in view of Nagata
3.	§103	15 and 16	Urashima in view of Keiper
4.	§103	18-24	Urashima in view of Manabe
5.	§103	1-4, 6-9, and 11-14	Guo
6.	§103	5, 10, 17	Guo in view of Ashby

V. TECHNOLOGY OVERVIEW

The ’360 patent describes a “process for the nucleation and subsequent epitaxial growth on a lattice mismatched substrate.” EX1001, 1:39-41. The ’360

patent's claims recite this process in terms of four general concepts: (i) pre-treating the substrate with group III or group II reactants at an elevated temperature; (ii) introducing a group V or group VI reactant to grow a nucleation layer; (iii) growing a buffer layer; and (iv) growing an epitaxial layer on a lattice mismatched substrate. But as explained by Dr. Shanfield in his declaration, each of these concepts, and combinations thereof, was well-known before the '360 patent. EX1003, ¶¶42-54.

VI. THE '360 PATENT

A. Overview of the '360 Patent

In its truncated disclosure, the '360 patent generally discloses "a single step process for the nucleation and subsequent epitaxial growth on a lattice mismatched substrate." EX1001, 1:39-41. Figure 1 (here) illustrates an example of this process.

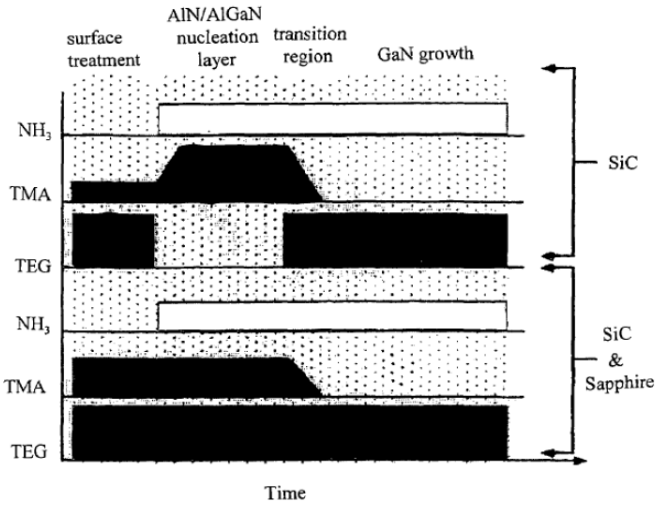

FIG. 1

The '360 patent explains that "a lattice mismatched substrate is pre-treated with a group III reactant or a group II reactant at an elevated growth temperature prior to the addition of a group V reactant or a group VI reactant and the growth of a

nucleation layer." EX1001, 1:53-62. The '360 patent discloses that "[i]n a preferred embodiment, the nucleation layer is AlxGa1-xN where x varies from 0 to 1." *Id*. Subsequently, a "buffer layer, preferably GaN, is formed on the nucleation layer to provide a surface upon which the epitaxial layer is grown," which is "preferably an epitaxial layer including AlN, AlGaN, or GaN." *Id*., 1:62-2:2.

B. Prosecution History Summary

The application that became the '360 patent issued after receiving only a single office action on November 5, 2006. EX1002, 0036-40. In the office action, the Examiner rejected claims 1-9 and 13-16 under §102 based on U.S. Patent No. 6,218,280 to Kryliouk et al., allowed claims 18-24, and indicated that claims 10-12 and 17 would be allowable if rewritten in independent form. *Id*., 0038-39. In response, Applicant argued that the recited "pre-treating step includes subjecting the surface of the substrate to at least one group III reactant or at least one group II reactant prior to introducing a group V reactant or a group VI reactant," whereas Kryliouk "specifically teaches simultaneously subjecting the substrate to a group III reactant (TMG reacted with HCl) and a group V reactant (NH3)."[2] *Id*., 0047. The Examiner then issued a notice of allowance on April 9, 2007. *Id*., 0057-62.

[2] Emphasis in original.

But, as detailed below, the claimed concepts were well-known before the ’360 patent. Indeed, had any of the references applied herein been before the Examiner during prosecution, the ’360 patent would not have been allowed.

C. Level of Ordinary Skill in the Art

A person of ordinary skill in the art (“POSA”) would have a bachelor’s degree in electrical engineering, computer engineering, chemical engineering, or an equivalent field, or an advanced degree in those fields, as well as least 3-5 years of academic or industry experience in nucleation and epitaxial growth processes, or comparable industry experience. EX1003, ¶56.

D. Claim Construction

In an *inter partes* review, claims are “construed using the same claim construction standard that would be used to construe the claim in a civil action under 35 U.S.C. 282(b).” 37 C.F.R. §42.100(b). All claim terms must be given their ordinary and customary meaning as understood by a POSA at the time of the invention, in light of the specification and the prosecution history of the patent. *Id*.

Solely for the purposes of this Petition, Petitioner submits that all claim terms should receive their plain and ordinary meaning in the context of the '360 patent specification.[3] EX1003, ¶57.

The claim construction process in the *Akoustis-Qorvo* litigation has just begun. EX1017, 5. The parties recently exchanged preliminary constructions. EX1031. Petitioner's preliminary constructions in the *Akoustis-Qorvo* litigation are generally advanced to ask the Court to define, or find indefinite, the ***outer*** bounds of various terms that are ambiguous. But whatever the ***outer*** bounds of the identified terms are, their meaning is understandable enough to compare the relevant elements to the prior art herein. EX1003, ¶249. Petitioner does not believe any of the claim construction disputes currently identified in the *Akoustis-Qorvo* litigation affect the unpatentability analysis herein (*i.e.*, the challenged claims are unpatentable under any proposed construction). Dr. Shanfield agrees. EX1003, ¶249.

[3] Petitioner does not waive any litigation argument as to scope, meaning, or invalidity.

VII. OVERVIEW OF THE APPLIED REFERENCES

A. Urashima

Like the '360 patent, Urashima describes "a method of fabricating a group-III nitride semiconductor crystal that enables high-quality group-III nitride semiconductor crystal to be epitaxially grown on a sapphire substrate by a simplified method." EX1004, ¶[0012]. Urashima's simplified fabrication method is illustrated in Figure 1 reproduced here.

Urashima explains that its method includes "a first step of depositing particles of a group III metal on a substrate surface," as shown in Figure 1(a). EX1004, ¶¶[0016], [0107]. Next, "a second step of nitriding the particles in an atmosphere containing a nitrogen source" is performed as shown in Figure 1(c). *Id*. Subsequently, "step D is performed … for further growth of gallium nitride-based compound on the growth nuclei Sb"[4] as shown in Figure 1(d).

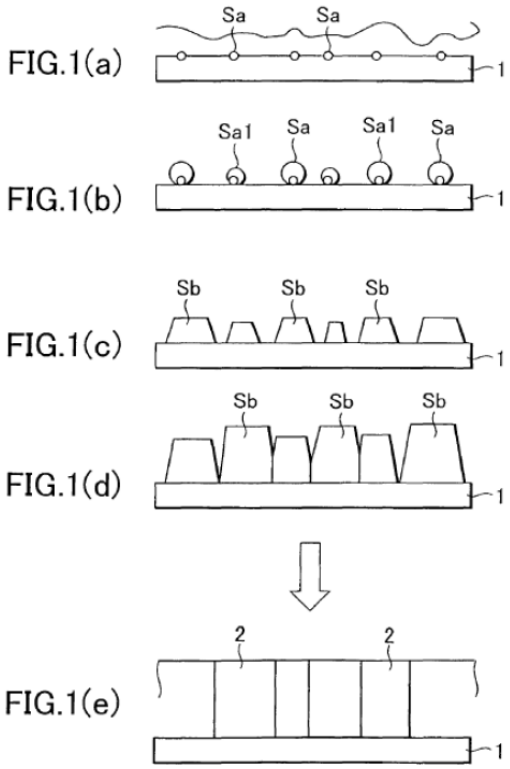

Id., ¶[0109]. Following step D, Urashima discloses that "it is therefore possible to

[4] "Sb" as used in Urashima does *not* refer to the symbol for antimony.

form a layer of gallium nitride-based compound semiconductor 2 of a desired thickness and crystallinity," as illustrated in Figure 1(e). *Id*., ¶[0114]. Urashima also discloses that its fabrication method is performed at an elevated temperature of "not lower than 900° C." *Id*., ¶[0028].

B. Nagata

Nagata discloses "a method for manufacturing a semiconductor quantum well box of a 2-6 group compound or a 3-5 group compound characterized in comprising a step of supplying a raw material on a substrate having poor wettability with group 2 or group 3 molten metals and forming fine droplets comprising group 2 or group 3 atoms, and a subsequent step of supplying a raw material containing group 6 or group 5 atoms to diffuse the group 6 or group 5 atoms into the group 2 or group 3 droplets, respectively …." EX1005, ¶[0008].

C. Keiper

Keiper is a paper that examines the use of "the metal organic vapour-phase epitaxy (MOVPE) process" in the manufacture of semiconductor crystal. EX1006, 256-57. Specifically, Keiper discloses a method to "provide an inherently 'safe process' for MOVPE of III-V materials and in addition has the potential for increased wafer uniformity." *Id*., 257. Keiper explains that its investigated process "eliminates both the explosive H_2 and the toxic hydrides as precursors," and also

that the "uniformity improves and the electrical characteristics are comparable or better than those of the standard MOVPE process." *Id*., Abstract.

D. Manabe

Manabe discloses a process that can be used to "grow a high-quality single crystalline gallium nitride compound-semiconductor having fewer lattice defects on a sapphire substrate." EX1007 1:39-42. Specifically, Manabe discloses a "system constitution [that] enables to mix a mixed gas comprising TMG, TMA, H2 and DEZ-H2, which is introduced through the first gas pipe 28, with a NH3 and H2 mixed gas, introduced through the second gas pipe 29." *Id*., 4:39-43. Manabe explains that by providing such a mixed atmosphere during the nitriding process, "the flow of the reaction gas on the sapphire substrate 50 gets constant and uniform[], so that high-quality crystal with less position-dependency may grow." *Id*., 4:48-51.

E. Guo

Like the '360 patent, Guo discloses "a method of making a semiconductor structure including the steps of depositing a small amount of aluminum directly on a silicon substrate to provide an aluminum protected substrate, and then depositing a nucleation layer of a nitride semiconductor on the aluminum protected substrate … [and] further includes the step of epitaxially growing a buffer structure … on the nucleation layer, and then epitaxially growing an operative structure including

one or more gallium nitride-based semiconductors on the buffer structure." EX1008, ¶[0011]. An example of Guo's method is illustrated in Figure 1 reproduced here.

FIG. 1

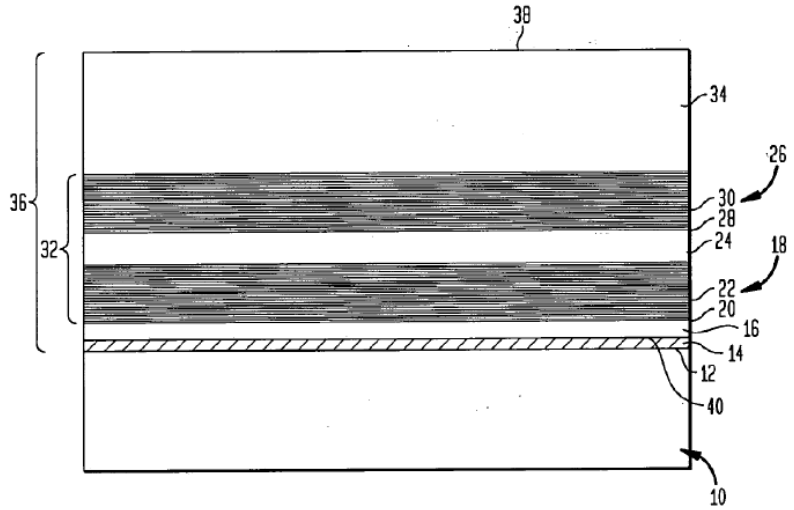

Guo explains that its method of manufacturing the above semiconductor structure is performed at an elevated temperature. EX1008, ¶¶[0004], [0031]-[0032], [0035].

F. Ashby

Ashby discloses a "process of growing a material on a substrate, particularly growing a Group II-VI or Group III-V material" (EX1009, Abstract) including "producing materials with relatively few defects" (*id*., ¶[0013]). Specifically, Ashby discloses an initial step where "[t]he substrate is cleaned in the growth chamber and the surface prepared for growth." *Id*., ¶[0028].

VIII. GROUNDS OF UNPATENTABILITY

Claims 1-24 are unpatentable for at least the following reasons. EX1003, ¶¶66-247.

A. Ground 1: Urashima renders obvious claims 1-4 and 6-14.

1. Independent Claim 1

a. [1.P]: A process for growing an epitaxial layer on a lattice mismatched substrate comprising the steps of:

To the extent limiting, Urashima discloses the preamble. EX1003, ¶¶67-71.

Urashima discloses "**a method of fabricating** a group-III nitride semiconductor crystal that enables **high-quality group-III nitride semiconductor crystal to be epitaxially grown on a sapphire substrate** by a simplified method." EX1004, ¶¶[0012], [0025], [0089]-[0090], [0109]. As Dr. Shanfield explains in his declaration, a POSA would have understood that Urashima's group-III nitride semiconductor crystal is "*an epitaxial layer*." EX1003, ¶¶68-69. Specifically, Dr. Shanfield explains that a POSA would have understood that the claimed "*epitaxial layer*" can include a group III-nitrogen reactant compound, and that Urashima's group-III nitride semiconductor crystal constitutes a layer consisting of such a compound. EX1004, ¶¶[0012]-[0013], [0035], [0047] ("a layer of gallium nitride-based compound semiconductor crystal"), [0106]-[0108]; EX1003, ¶¶68-69.

Urashima also discloses that its sapphire substrate is "*a lattice mismatched substrate*": "There is a large **lattice mismatch** between such a [sapphire] substrate and the group-III nitride compound semiconductor crystal that is epitaxially grown on the substrate." EX1004, ¶¶[0004], [0003], [0133], [0153].

b. [1.a] providing a substrate;

Urashima illustrates an example of its fabrication method in Figure 1, which includes steps "used to form the layer of gallium nitride-based compound semiconductor **on the substrate**." EX1004, ¶¶[0107], ¶[0067]; EX1003, ¶72. Figure 1 is reproduced and annotated below with the "*substrate*" shaded yellow.

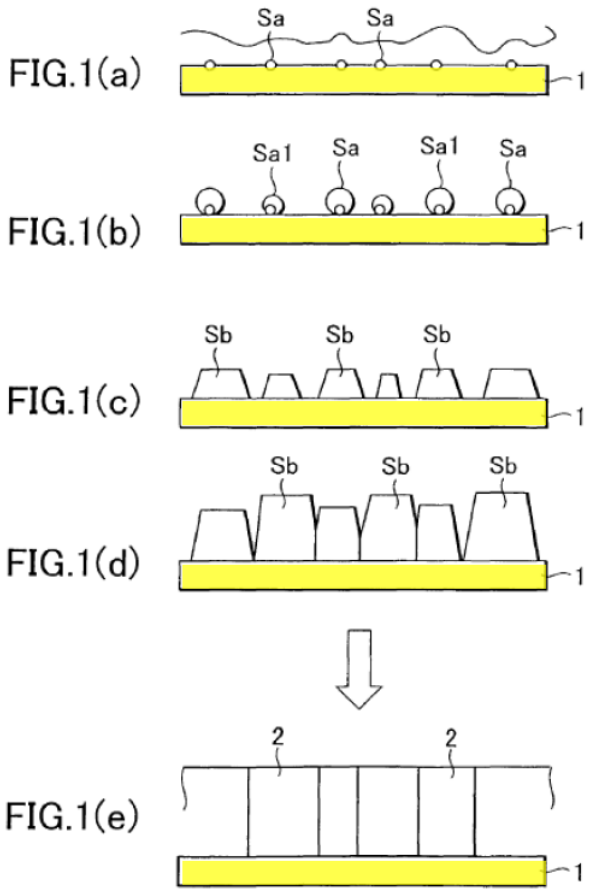

c. [1.b] pre-treating a surface of the substrate with at least one group III reactant or at least one group II

reactant at an elevated growth temperature prior to introducing a group V reactant or a group VI reactant;

First, Urashima discloses "*pre-treating a surface of the substrate with at least one group III reactant*": "a method of fabricating a group-III nitride semiconductor crystal according to a first aspect, comprising **a first step of depositing particles of a group III metal on a substrate surface**." EX1004, ¶¶[0016], [0089], Abstract. Urashima illustrates this "*pre-treating*" step in Figure 1(a), where "in step A (the first step), a metal element, preferably metal nuclei (droplets) Sa of a group III metal element are adhered to a substrate 1." *Id.*, ¶[0107]. Figure 1 is annotated below with the group III metal, Sa, shaded red.

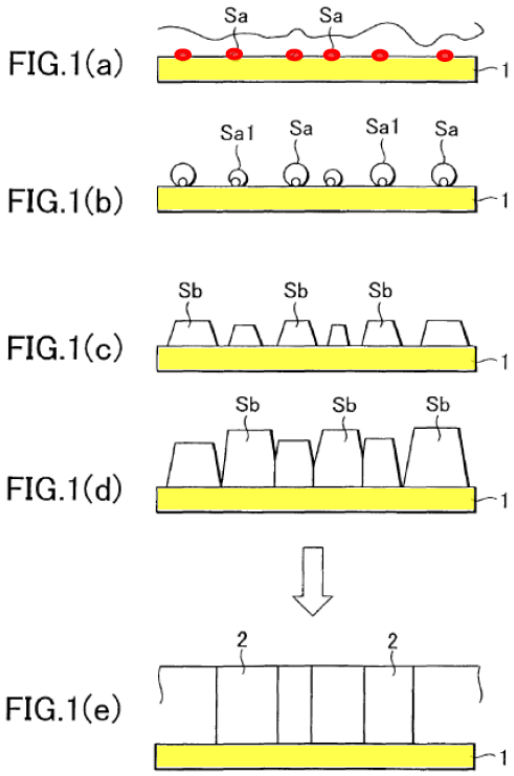

Urashima also discloses that the first step of adhering the group III metal, Sa, to substrate 1 is performed "*at an elevated growth temperature*." EX1003, ¶75. The '360 patent discloses that in some embodiments, "the elevated growth temperature is 900 to 1100° C." EX1001, 2:50-51. Urashima discloses performing the first step within this example elevated temperature range. *Id.* Specifically, Urashima discloses setting the

temperature of the epitaxial growth apparatus at "**1100° C.**," and that "[s]teps A [the first step], B and C are implemented at that temperature." EX1004, ¶¶[0109], [0025] (performing the first step "at a temperature T1"), [0028] ("temperature T1 is **not lower than 900° C**.").

Finally, Urashima discloses that the group III metal, Sa, is introduced "*prior to introducing a group V reactant or a group VI reactant*." EX1003, ¶76. As Dr. Shanfield explains, a POSA would have understood this claim limitation to include instances where the group III reactant is introduced before the introduction of a nitrogen reactant ("*a group V reactant*"). *Id*. Urashima discloses such an ordering of fabrication steps: "it is preferable to perform the first step [of depositing group III metal on the substrate] in an atmosphere that **does not contain a nitrogen source**." EX1004, ¶¶[0083], [0025], [0081], [0089], [0119], Abstract.

d. [1.c] introducing a group V reactant or a group VI reactant to grow a nucleation layer on the surface of the substrate; and

Urashima discloses "*introducing a group V reactant*": after performing a "first step of depositing particles of a group III metal on a substrate surface, [performing] **a second step of nitriding the particles in an atmosphere containing a nitrogen source.**" EX1004, ¶¶[0016], [0089], [0113], Abstract. As explained by Dr. Shanfield, a POSA would have understood that "nitriding the particles in an atmosphere containing a nitrogen source" is an example of

"*introducing a group V reactant*" at least because ammonia is disclosed as being a preferred reactant for both of these steps. EX1003, ¶78; EX1004, ¶¶[0085], [0123]; EX1001, 2:60-62, 3:22-25.

Urashima also discloses that nitriding the particles is carried out in order to "*grow a nucleation layer on the surface of the substrate*." EX1003, ¶¶79, 88. Specifically, Urashima discloses "in step C (the third step), the annealed **metal nuclei Sal are nitrided to form growth nuclei Sb** (FIG. 1(c))." EX1004, ¶¶[0107], [0108] ("…substrate 1 having the growth nuclei Sb…"), [0113]. Figure 1 is annotated below with the growth nuclei Sb shaded blue.

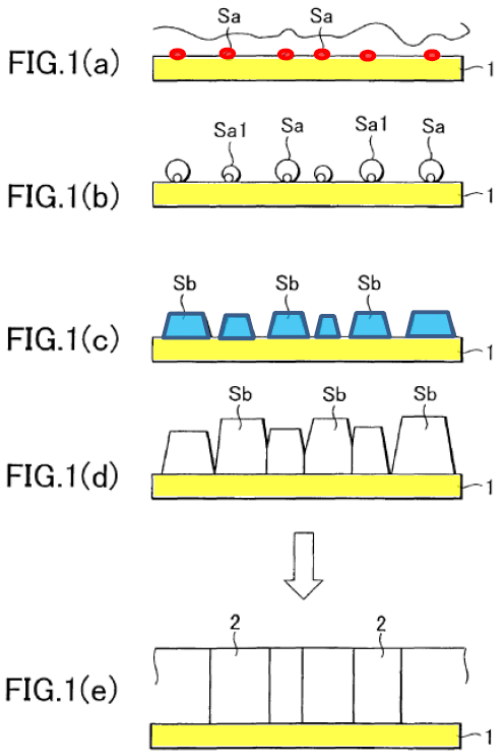

As explained by Dr. Shanfield, a POSA would have understood that Urashima's growth nuclei Sb collectively represent "*a nucleation layer*." EX1003, ¶80. The '360 patent explains that "*a nucleation layer*" is: (i) "formed by introducing the group V reactant or the group VI reactant into the growth chamber"; and (ii) composed of "AlxGa1-xN where x varies from 0 to 1." EX1001, 1:59-62. Urashima's growth nuclei Sb satisfy both of these criteria. EX1003, ¶¶80-87.

First, Urashima's growth nuclei Sb are formed by subjecting group III metal particles, Sa or Sa1, to a nitrogen source ("*introducing a group V reactant*"). EX1004, ¶¶[0016], [0089], [0107], [0113].

Second, in at least some instances, the resulting growth nuclei Sb are composed of a combination of Al (aluminum) and/or Ga (gallium), and N (nitrogen), because the group III metal particles, Sa or Sa1, include "at least one metal element selected from among In, Ga and Al." *Id*., ¶¶[0025], [0018], [0037], [0081], [0089], [0117]. Thus, when the nitrogen source is introduced to the group III metal particles, Sa or Sa1, the resulting growth nuclei Sb are composed of some combination of In, Ga, and/or Al, and N. EX1003, ¶82. Thus, like the '360 patent, Urashima also discloses a layer of growth nuclei Sb having a composition of AlxGa1-xN, where x varies from 0 to 1—e.g., AlN, AlGaN, or GaN. *Id*., ¶83; EX1001, 1:59-62.

To the extent that Urashima does not explicitly disclose the composition of the resulting growth nuclei Sb, Dr. Shanfield explains that a POSA would have nonetheless found it obvious that growth nuclei Sb would have a composition of AlxGa1-xN, where x varies from 0 to 1. EX1003, ¶84.

Therefore, because Urashima's layer of growth nuclei Sb are formed in the same manner, and can have the same resulting composition as the nucleation layer in the '360 patent, a POSA would have understood that Urashima's growth nuclei

Sb disclose and/or render obvious "*a nucleation layer*." *Id.*, ¶85. Additionally, as Dr. Shanfield explains, Urashima's discussion of growth nuclei Sb is also consistent with the other portions of the '360 patent discussing its "*nucleation layer*." *Id.*, ¶¶86-87.

Therefore, Urashima discloses and/or renders obvious this limitation.

e. [1.d] growing a buffer layer on said nucleation layer, said buffer layer providing a surface upon which said epitaxial layer is grown.

Urashima discloses "*growing a buffer layer on said nucleation layer*." EX1003, ¶90. The '360 patent explains that "*a buffer layer*" is preferably "a GaN buffer layer [that] provides a surface on which GaN-based materials can subsequently be deposited." EX1001, 3:39-42. Like the '360 patent, Urashima discloses that after growth nuclei Sb are formed ("*said nucleation layer*"), as shown in Figure 1(c), an additional "gallium nitride-based compound semiconductor layer is grown on the substrate 1 having the growth nuclei Sb (FIG. 1(d))" in step D (the fourth step). EX1004, ¶¶[0108], [0109], [0114] ("**More gallium nitride-based compound semiconductor is grown on the growth nuclei Sb** … **forming a flat layer**.").

Specifically, in step C (the third step), growth nuclei Sb are formed having an initial layer depth as shown in Figure 1(c) below—i.e., the layer below the red dashed line. *Id.*, ¶¶[0108], [0109]; EX1003, ¶91. Subsequently, "step D is

performed … **for further growth of gallium nitride-based compound on the growth nuclei Sb**" as shown in Figure 1(d), which is annotated below with the additional GaN-based compound semiconductor layer (above the red dashed line) shaded orange. EX1004, ¶[0109]; EX1003, ¶91.

A POSA would have therefore understood that the additional GaN-based compound semiconductor layer grown in step D represents "*growing a buffer layer on said nucleation layer*." EX1003, ¶92.

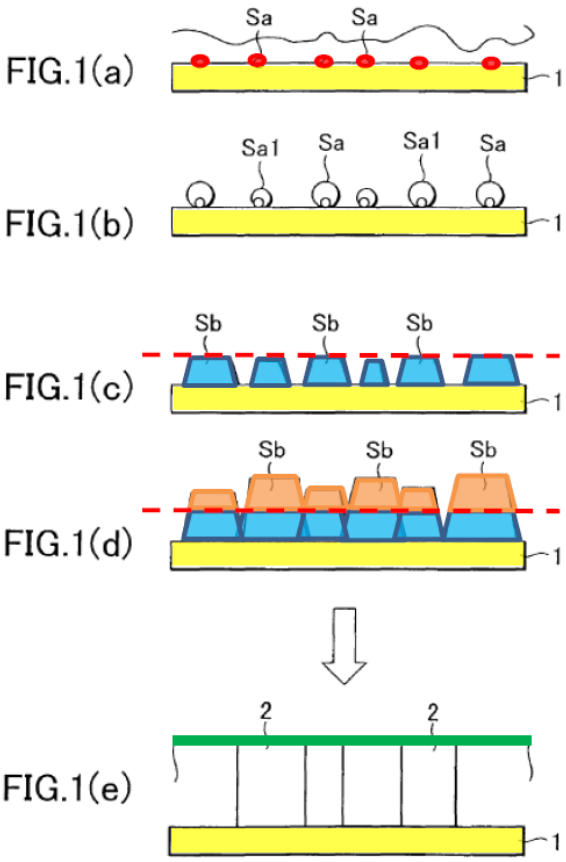

Urashima also discloses "*said buffer layer providing a surface upon which said epitaxial layer is grown*." *Id.*, ¶93. Specifically, Urashima discloses that after the additional GaN-based compound semiconductor layer is grown in step D ("*said buffer layer*"), "it is therefore possible to form a layer of gallium nitride-based compound semiconductor 2 of a desired thickness and crystallinity," as illustrated in Figure 1(e) above (shaded green). EX1004, ¶¶[0114], [0108], [0140]; EX1003, ¶93. Urashima explains that "[b]y means of the above method, group-III nitride semiconductor crystal having good crystallinity can be epitaxially grown on

a sapphire substrate." EX1004, ¶¶[0090], [0089], [0115]. As previously mentioned in §VIII.A.1.a, a POSA would have understood that Urashima's group-III nitride semiconductor crystal—e.g., gallium nitride-based compound semiconductor 2—is "*an epitaxial layer*." EX1003, ¶93.

Urashima also discloses that GaN-based compound semiconductor 2 ("*an epitaxial layer*") is grown on the additional GaN-based compound semiconductor layer grown in step D ("*said buffer layer*"). *Id.*, ¶94. But, to the extent that such disclosure is not explicit, Urashima additionally discloses stacking multiple layers of GaN-based compound semiconductor 2. EX1004, ¶¶[0046] ("The above method encompasses a case in which a separate layer of gallium nitride-based compound semiconductor crystal is grown on the gallium nitride-based compound semiconductor crystal layer formed in the fourth step"), [0055], claim 77. When such stacking is performed, a second layer of GaN-based compound semiconductor 2 would necessarily be grown on the GaN-based compound semiconductor layer grown in step D ("*said buffer layer*"). EX1003, ¶94.

2. Dependent Claim 2

Urashima discloses claim 2. EX1003, ¶¶96-97. Urashima discloses that "[t]he **substrate** used in the above fabrication method may be glass, **SiC**, **Si** [silicon], GaAs, **sapphire**, or other such substances." EX1004, ¶¶[0080], [0116].

3. Dependent Claim 3

Urashima discloses claim 3. EX1004, ¶¶[0018], [0025], [0037], [0081] ("The **group III metal** particles deposited on the substrate in the first step may be particles of **Al, Ga**, In and the like"), [0089], [0117]; EX1003, ¶98.

4. Dependent Claim 4

Urashima discloses claim 4. EX1003, ¶¶99-100. Urashima discloses that gases containing group III metals that can be used "include trimethyl gallium (TMG), triethyl gallium (TEG), trimethyl aluminum (TMA), trimethyl indium (TMI) …." EX1004, ¶¶[0118], [0082], [0096].

5. Dependent Claim 6

Urashima discloses claim 6 for the reasons discussed in §VIII.A.1.c and for claim 3. EX1004, ¶¶[0016], [0018], [0025], [0037], [0081] ("The **group III metal particles deposited on the substrate in the first step** may be particles of **Al, Ga**, In and the like … it is desirable to use particles of InuGavAlw (where u+v+w=1, 0≦u≦1, 0≦v≦1, 0≦w≦1)"), [0089], [0117]; EX1003, ¶101.

6. Dependent Claim 7

Urashima discloses claim 7 for the reasons discussed in §VIII.A.1.d and for claim 6. EX1004, ¶¶[0016], [0018], [0025], [0037], [0081], [0089], [0107], [0113], [0117]; EX1003, ¶102.

7. Dependent Claim 8

Urashima discloses claim 8 for the reasons discussed in §VIII.A.1.e. EX1004, ¶¶[0046], [0055], [0108], [0109] ("step D is performed … **for further growth of gallium nitride-based compound on the growth nuclei Sb**" as shown in Figure 1(d)), [0114], claim 77; EX1003, ¶103.

8. Dependent Claim 9

Urashima discloses claim 9 for the reasons discussed in §VII.A.1.e. EX1003, ¶¶104-105. Urashima discloses that after the additional GaN-based compound semiconductor layer is grown in step D ("*said buffer layer*"), "it is therefore possible to form a layer of **gallium nitride-based compound semiconductor 2** of a desired thickness and crystallinity," as illustrated in Figure 1(e). EX1004, ¶¶[0114], [0046], [0055], [0081], [0089], [0090], [0108], [0015], [0140]. As Dr. Shanfield explains, a POSA would have understood that GaN, AlGaN, and BGaN are all examples of gallium nitride-based compounds. EX1003, ¶105.

9. Dependent Claim 10

Urashima discloses claim 10. EX1003, ¶¶106-107. Urashima discloses that "[t]he method of fabrication can include **a known heat treatment step prior to the first step** [the "*pre-treating the surface*" step] known as thermal annealing. Thermal annealing, which is widely employed when sapphire substrates are used, is a type of cleaning treatment implemented in an epitaxial reactor. It usually

involves **heating the substrate** at 1000° C. to 1200° C. **in an atmosphere containing hydrogen** or nitrogen." EX1004, ¶¶[0101], [0140].

10. Dependent Claim 11

Urashima discloses claim 11 for the reasons discussed in §VIII.A.1.c. EX1003, ¶108. Urashima discloses setting the temperature of the epitaxial growth apparatus at "**1100° C.**" and that "[s]teps A, B and C are implemented at that temperature." EX1004, ¶¶[0109], [0025] (performing the first step "at a temperature T1"), [0028] ("temperature T1 is **not lower than 900° C**.).

11. Dependent Claim 12

Urashima discloses claim 12 for the reasons discussed in §VIII.A.1.c. EX1003, ¶¶109-111.

Urashima discloses that "[s]teps A, B and C ["*the step of introducing a group V reactant*"/"*growing a nucleation layer*"] are implemented at [1100° C]." EX1004, ¶[0109]. Urashima also discloses that "step D ["*the step of growing a buffer layer*"] can be effected **at a lower temperature than steps A to C, or at the same temperature**." *Id*., ¶[0110].

Urashima also discloses that its process can include nitriding the deposited metal ("*the step of introducing a group V reactant*"/"*growing a nucleation layer*") at a temperature T2 that is ≥900° C and growing an additional GaN-based

compound semiconductor layer ("*growing a buffer layer*") at a temperature T3 that is ≥1000° C. *Id*., ¶¶[0025], [0028].

12. Dependent Claim 13

Urashima discloses claim 13. EX1003, ¶112. As discussed in §VIII.A.1.d, Urashima discloses a step of "nitriding the particles in an atmosphere containing a nitrogen source" (introducing a "*group V reactant*"). *Id.*; EX1004, ¶[0016]. Urashima explains that this nitrogen source ("*group V reactant*") can be ammonia or hydrazine. EX1004, ¶¶[0085], [0123]. As Dr. Shanfield explains, a POSA would have understood that ammonia and hydrazine are both examples of "*a group V hydride*." EX1003, ¶112; EX1001 2:60-62 ("a group V hydride, most preferably ammonia, arsine or phosphine").

13. Dependent Claim 14

Urashima discloses claim 14 for the reasons discussed for claim 13. EX1004, ¶¶[0016], [0085], [0123]; EX1003, ¶113.

B. Ground 2: The combination of Urashima and Nagata renders obvious claims 5 and 17.

1. A POSA would have been motivated to combine Urashima and Nagata.

A POSA would have been motivated to modify Urashima's method of fabricating a film of group-III nitride semiconductor crystal to use one or more group II reactants in Urashima's first step of depositing metal particles on a

substrate surface, as taught by Nagata. EX1003, ¶115. A POSA would have been further motivated to modify Urashima's fabrication method to use one or more group VI reactants in Urashima's step of forming growth nuclei, as also taught by Nagata. *Id*.

Urashima discloses a "method of fabricating a film of group-III nitride semiconductor crystal [that] includes a step of using metal material to deposit particles of a group III metal on a substrate surface in an atmosphere containing no nitrogen source …." EX1004, Abstract. Urashima discloses that "elements other than group III metals" can also be used during this first step. *Id.*, ¶¶[0096], [0081], [0117]. Urashima provides a small number of non-limiting examples of some "other such non-group III metals" that can be used, but Urashima does not provide an exhaustive list. *Id.*, ¶¶[0081], [0096]; EX1003, ¶116. Urashima also does not disclose why other non-group III metals may be used. EX1003, ¶116.

Moreover, Urashima discloses that its fabrication method additionally includes "a step of nitriding the particles in an atmosphere containing a nitrogen source" (a group V reactant). EX1004, Abstract. Urashima explains that "[t]he shape of the growth nuclei Sb can be controlled by controlling the conditions used during the nitriding process. In particular, the gas used during the nitriding …." EX1004, ¶¶[0113], [0107], [0129]. Urashima discloses that "[t]hese conditions have to be appropriately selected according to the type of metal used for the metal

nuclei Sa that adhere to the substrate ….” *Id*. Although Urashima discloses that other non-group III metals may be used for the metal nuclei Sa that adhere to the substrate, Urashima does not disclose the reactants that should be used when growing semiconductors of these other non-group III metals. EX1003, ¶117.

As Dr. Shanfield explains, a POSA would have thus looked to the prior art for guidance on what other non-group III metals may be used in Urashima’s fabrication method, and on what reactants should be used when growing semiconductors of these other non-group III metals. *Id.*, ¶118. Nagata is such prior art.

Nagata discloses “a method for manufacturing a semiconductor quantum well box of a 2-6 group compound or a 3-5 group compound characterized in comprising a step of supplying a raw material on a substrate having poor wettability with group 2 or group 3 molten metals and forming fine droplets comprising group 2 or group 3 atoms, and a subsequent step of supplying a raw material containing group 6 or group 5 atoms to diffuse the group 6 or group 5 atoms into the group 2 or group 3 droplets, respectively ….” EX1005, ¶[0008], Abstract, claim 1. Thus, Nagata discloses that the metal particles adhered to the substrate can be non-group III metals—i.e., “group 2 … molten metals”—and when such group 2 metals are used, “raw material containing group 6 … atoms” are introduced later in the fabrication method. *Id*.

Based on the teachings of Nagata, Dr. Shanfield explains that a POSA would have been motivated to modify Urashima to use a group II reactant in Urashima's first step of depositing metal particles on a substrate surface, and to use a group VI reactant in Urashima's step of forming growth nuclei. EX1003, ¶120. Nagata discloses that its fabrication method can be used to form "a 2-6 group compound or a 3-5 group compound." EX1005, ¶[0008]. Nagata and Urashima also disclose using the same or similar crystal growth techniques. *Id.,* ¶[0004] ("MOVPE (metal organic vapor phase deposition) and MBE (molecular beam epitaxy)"); EX1004, ¶[0088] ("metallo-organic chemical vapor deposition (MOCVD)" and MBE).

Thus, as Dr. Shanfield explains, a POSA would have recognized that Nagata's techniques are applicable to Urashima, and that modifying Urashima to use group II and group VI reactants would have required minimal modifications. EX1003, ¶121. In the combined system, Urashima's crystal growth technique would use a group II reactant in the first step of depositing metal particles on a substrate surface, and would use a group VI reactant in the step of forming growth nuclei. *Id*. This would then result in the formation of a group II-VI compound semiconductor in the same way as Urashima's group III element growth technique to form a group III-V compound semiconductor. *Id*. Moreover, Dr. Shanfield explains that a POSA would have recognized that such a modification would have the added benefits of improved quality and cost efficiency. *Id.*, ¶¶122-123.

As Dr. Shanfield further explains, a POSA would have also been motivated to substitute Nagata's group II reactant for Urashima's group III reactant, since it is merely a simple substitution of one known element for another, where both are selected from a finite number of identified materials, to obtain predictable results. *Id.*, ¶¶124-125. Moreover, Dr. Shanfield explains that a POSA would have been further motivated to combine Urashima and Nagata because both are in the same general field of semiconductor crystal growth via an epitaxial process, and address the same problem—formation of a semiconductor crystal film having crystallinity that is good enough for semiconductor device applications. EX1004, ¶[0137], EX1005, ¶[0020]; EX1003, ¶126. Accordingly, a POSA would have had a reasonable expectation of success in implementing group II and group VI reactants in Urashima's crystal growth technique, as taught by Nagata. EX1003, ¶126.

As explained by Dr. Shanfield, a POSA would not have experienced any unreasonable technical hurdles in implementing these modifications. *Id.*, ¶127. Additionally, Dr. Shanfield explains that a POSA would have understood that modifying Urashima's method to use group II and group VI reactants would merely amount to combining prior art elements (Urashima's crystal growth techniques and Nagata's use of group II and group VI reactants) according to known methods (selecting a group II reactant for use in a first step of depositing metal particles on a substrate surface, and selecting a group VI reactant for use in a

step of forming growth nuclei) to yield predictable results (e.g., the formation of a group II-VI compound semiconductor). *Id.*, ¶127.

2. Dependent Claim 5

The combination of Urashima and Nagata discloses claim 5. EX1003, ¶¶128-130. Nagata discloses that using its techniques, "semiconductors comprising **group 2-6 compounds such as CdSe, CdSSe, ZnSe, ZnSSe, and CdTe** can also be produced." EX1005, ¶[0013]. As Dr. Shanfield explains, a POSA would have understood that CdSe, CdSSe, and CdTe are each formed using "*a cadmium reactant*," and that ZnSe and ZnSSe are each formed using "*a zinc reactant*." EX1003, ¶129. For the reasons discussed in §VIII.B.1, a POSA would have been motivated to use each of these reactants in Urashima's crystal growth techniques. *Id*.

3. Dependent Claim 17

The combination of Urashima and Nagata discloses claim 17. EX1003, ¶¶131-132. Nagata discloses that "semiconductors comprising **group 2-6 compounds such as CdSe, CdSSe, ZnSe, ZnSSe, and CdTe** can also be produced," EX1005, ¶[0013]. As Dr. Shanfield explains, a POSA would have understood that CdTe is formed using "*a tellurium reactant*," and that CdSSe and ZnSSe are each formed using "*a sulfur reactant*." EX1003, ¶132. For the reasons

discussed in §VIII.B.1, a POSA would have been motivated to use each of these reactants in Urashima's crystal growth techniques. *Id*.

C. Ground 3: The combination of Urashima and Keiper renders obvious claims 15 and 16.

1. A POSA would have been motivated to combine Urashima and Keiper.

A POSA would have been motivated to modify Urashima's method of fabricating semiconductor crystal to use a group V *organic* precursor in place of Urashima's group V *hydride* precursor during the semiconductor growth process, as taught by Keiper. EX1003, ¶134.

Urashima discloses the step of "nitriding the particles in an atmosphere containing a nitrogen source." EX1004, ¶[0016]. Urashima explains that this nitrogen source (group V reactant) can be ammonia or hydrazine, which as explained by Dr. Shanfield, a POSA would have understood are examples of a group V hydride precursor. *Id.*, ¶¶[0085], [0123]; EX1001 2:60-62; EX1003, ¶135. Urashima also discloses that its fabrication method "is not limited to these examples." EX1004, ¶[0138]. Specifically, Urashima discloses that "[t]he shape of the growth nuclei Sb can be controlled by controlling the conditions used during the nitriding process. In particular, the gas used during the nitriding …." *Id.*, ¶¶[0113], [0107], [0129]. Urashima explains that the nitriding conditions "have to be appropriately selected according to the type of metal used for the metal nuclei

Sa that adhere to the substrate, the nitrogen material used for the nitriding, the shape of the reactor, and so forth." *Id.*, ¶[0113].

Urashima, however, does not specifically identify what other gases could be used during the formation of growth nuclei, or reasons why these other materials may be used. EX1003, ¶136. But as Dr. Shanfield explains, a POSA would have recognized that there are reasons a skilled artisan would *not* have wanted to use Urashima's group V *hydride* precursor during the formation of growth nuclei, including potential safety reasons and a choice to use less toxic group V sources, for example. *Id*. Dr. Shanfield explains that a POSA would have thus looked to the prior art for guidance on what other group V reactants may be used in Urashima's semiconductor growth process. *Id*. Keiper is such a prior art reference.

Like Urashima, Keiper examines processes for the manufacture of semiconductor crystal. EX1006, 256-57. Specifically, Keiper discloses a method to "provide an inherently 'safe process' for MOVPE of III-V materials and in addition has the potential for increased wafer uniformity." *Id.*, 257. Keiper explains that its investigated process "eliminates both the explosive H2 and the toxic hydrides as precursors." *Id.*, Abstract, 256-57, 259-60. Specifically, "[f]or safety reasons [] many alternative, less toxic group V-sources have been investigated," including "the alternative group V-sources tertiarybutylarsine (TBA) and tertiarybutylphosphine (TBP)." *Id*., 256.

Dr. Shanfield explains that based on the teachings of Keiper, a POSA would have been motivated to modify Urashima to use a safer, alternative group V reactant—e.g., TBA or TBP—in Urashima's semiconductor growth process. EX1003, ¶138. Like Urashima, Keiper discloses that its proposed method can be used to form "III–V materials." EX1006, 257. Keiper and Urashima also disclose using the same or similar crystal growth techniques. *Id.*, 256-57 ("metal organic vapour-phase epitaxy (MOVPE) process"); EX1004, ¶[0088] (MOCVD). Thus, as Dr. Shanfield explains, a POSA would have recognized that Keiper's techniques are applicable to Urashima, and that modifying Urashima to use a safer, alternative group V reactant would have required minimal modifications. EX1003, ¶138.

In the combined system, Urashima's crystal growth technique would use a group V *organic* precursor (TBA or TBP) in place of Urashima's group V *hydride* precursor during the formation of growth nuclei. EX1003, ¶139. The end result would still be the formation of a group III-V compound semiconductor that could be used for the applications disclosed in Urashima. EX1004, ¶[0001]; EX1006, 256; EX1003, ¶139. As Dr. Shanfield also explains, a POSA would have recognized that such a modification would have the added benefit of "eliminate[ing] both the explosive H2 and the toxic hydrides as precursors," as well as providing improved wafer uniformity and electrical characteristics. EX1006, Abstract, 256-57, 259-60; EX1003, ¶139.

A POSA would have also been motivated to substitute Keiper's group V *organic* precursor for Urashima's group V *hydride* precursor, since it is merely a simple substitution of one known element for another to obtain predictable results. EX1003, ¶140. As Dr. Shanfield explains, a POSA would have been further motivated to combine Urashima and Keiper because both are in the same general field of semiconductor crystal growth via an epitaxial process, and address the same problem—formation of a semiconductor crystal film having good crystallinity and providing improved electrical characteristics. EX1004, ¶[0137]; EX1006, Abstract, 256-57, 259-60; EX1003, ¶140. Accordingly, Dr. Shanfield explains that a POSA would have had a reasonable expectation of success in implementing group V organic precursors in Urashima's crystal growth technique, as taught by Keiper. EX1003, ¶140.

As explained by Dr. Shanfield, a POSA would not have experienced any unreasonable technical hurdles in implementing these modifications. *Id.*, ¶141. Additionally, a POSA would have understood that modifying Urashima's method to use group V organic precursors would merely amount to combining prior art elements (Urashima's crystal growth techniques and Keiper's use of group V organic precursors) according to known methods (selecting a group V organic precursor for use in forming growth nuclei) to yield predictable results (e.g., the formation of a group III-V compound semiconductor). *Id*.

2. Dependent Claim 15

The combination of Urashima and Keiper discloses claim 15. EX1003, ¶¶142-143. Keiper discloses using "the alternative group V-sources tertiarybutylarsine (TBA) and tertiarybutylphosphine (TBP)." EX1006, 256-57, 259-60, Abstract. As Dr. Shanfield explains, a POSA would have understood that TBA and TBP are examples of "*a group V organic precursor*." EX1003, ¶143; EX1001, claim 16. For the reasons discussed in §VIII.C.1, a POSA would have been motivated to use TBA or TBP in Urashima's crystal growth techniques. EX1003, ¶143.

3. Dependent Claim 16

The combination of Urashima and Keiper discloses claim 16 for the reasons discussed for claim 15. EX1006, 256-57, 259-60, Abstract; EX1003, ¶144.

D. Ground 4: The combination of Urashima and Manabe renders obvious claims 18-24.

1. A POSA would have been motivated to combine Urashima and Manabe.

A POSA would have been motivated to modify Urashima's fabrication method to use the techniques disclosed in Manabe for introducing and stopping the flow of group III compounds during growing of Urashima's nucleation layer. EX1003, ¶146.

Urashima discloses a fabrication method "comprising a first step of depositing particles of a group III metal on a substrate surface, [and] a second step of nitriding the particles in an atmosphere containing a nitrogen source." EX1004, ¶[0016]. Urashima also discloses that "[t]he above method encompasses a case in which the first step comprises two steps," in which two different group III metals are introduced. *Id.*, ¶¶[0043], [0047], [0128]. Urashima further discloses stopping the flow of the group III metals in the first step before introducing the nitrogen source in the second step to form the nucleation layer. *Id.*, ¶¶[0081], [0083], [0089], [0119]. Urashima also discloses that its fabrication method "is not limited to these examples" (*id.*, ¶[0138]), and that the shape of nucleation layer "can be controlled by controlling the conditions used during the nitriding process" (*id.*, ¶¶[0113], [0107], [0129], [0138]).

Urashima does not specifically identify many of the other conditions that could be used during the nitriding process, or reasons why these other conditions may be used. EX1003, ¶148. But, as Dr. Shanfield explains, a POSA would have recognized that there are reasons that a skilled artisan would *not* have wanted to stop the flow of both the group III metals in the first step before introducing the nitrogen source in the second step, including the potential for improved uniformity and reduced lattice defects, for example. *Id*. Dr. Shanfield explains that a POSA would have thus looked to the prior art for guidance on what other conditions may

be used in Urashima's nitriding process, including continuing to introduce at least one group III metal during the introduction of the nitrogen source. *Id*. Manabe is such a prior art reference.

Like Urashima, Manabe discloses a process that can be used to "grow a high-quality single crystalline gallium nitride compound-semiconductor having fewer lattice defects on a sapphire substrate." EX1007, 1:39-42, Abstract, claim 1. Specifically, Manabe discloses a process where at least one group III metal continues to be introduced during the introduction of a nitrogen source: "Such system constitution enables to mix a mixed gas comprising TMG, TMA [group III compounds] …, which is introduced through the first gas pipe 28, with a NH3 and H2 mixed gas [nitrogen source], introduced through the second gas pipe 29." *Id*., 4:39-43. Manabe explains that by providing such a mixed atmosphere during the nitriding process, "the flow of the reaction gas on the sapphire substrate 50 gets constant and uniform[], so that high-quality crystal with less position-dependency may grow." *Id*., 4:48-51, 1:38-42.

As Dr. Shanfield explains, based on the teachings of Manabe, a POSA would have been motivated to modify Urashima to continue the flow of at least one of the group III metals from the first step during the introduction of the nitrogen source in the second step. EX1003, ¶150. Manabe and Urashima disclose using the same or similar crystal growth techniques. EX1007, claim 1

("metalorganic vapor phase epitaxy method (MOVPE)"), claim 6; EX1004, ¶[0088] (MOCVD). Thus, as Dr. Shanfield explains, a POSA would have recognized that Manabe's techniques are applicable to Urashima, and that modifying Urashima to use Manabe's mixed atmosphere during the nitriding process would have required minimal modifications. EX1003, ¶151.

Indeed, in the combined system, Urashima's crystal growth technique would stop the flow of only the first of the two group III metals after the first pre-treatment step, allow the second group III metal to continue to flow during the introduction of the nitrogen source in the second step, and then resume the flow of the first group III metal to form Urashima's additional GaN-based compound semiconductor layer ("*a buffer layer*"). *Id*. The end result would still be the formation of a group III-nitride compound semiconductor that could be used for the applications disclosed in Urashima. EX1004, ¶[0001]; EX1007, 1:7-10; EX1003, ¶¶151-152. Moreover, Dr. Shanfield explains that a POSA would have recognized that such a modification would have the added benefit of growing "high-quality crystal with less position-dependency" and improved uniformity, as well as producing "fewer lattice defects on a sapphire substrate." EX1007, 4:48-51, 1:38-42; EX1003, ¶¶151-152.

As Dr. Shanfield explains, a POSA would have also been motivated to combine Urashima and Manabe because both are in the same general field of

semiconductor crystal growth via an epitaxial process, and address the same problem—formation of a semiconductor crystal film having good crystallinity, fewer defects, and that is good enough for semiconductor device applications. EX1004, ¶[0137]; EX1007, 4:48-51, 1:38-42; EX1003, ¶153. Accordingly, a POSA would have had a reasonable expectation of success in implementing a mixed atmosphere during Urashima's nitriding process, as taught by Manabe. EX1003, ¶153.

As explained by Dr. Shanfield, a POSA would not have experienced any unreasonable technical hurdles in implementing these modifications. *Id*., ¶154. Additionally, a POSA would have understood that modifying Urashima's nitriding process to include Manabe's mixed atmosphere would merely amount to combining prior art elements (Urashima's crystal growth techniques and Manabe's mixed atmosphere consisting of group III compounds and a nitrogen source) according to known methods (allowing at least one group III metal to continue flowing during the introduction of the nitrogen source in Urashima's second step) to yield predictable results (e.g., the formation of a group III-nitride compound semiconductor). *Id*.

2. Independent Claim 18

a. [18.P]: A process for growing an epitaxial layer …

To the extent limiting, Urashima discloses the preamble for the reasons discussed in §VIII.A.1.a. EX1004, ¶¶[0003]-[0004], [0012]-[0013], [0025], [0035], [0047], [0089]-[0090], [0106]-[0109], [0133], [0153]; EX1003, ¶155.

b. [18.a] providing a substrate;

Urashima discloses this limitation for the reasons discussed in §VIII.A.1.b. EX1004, FIG. 1, ¶¶[0106], [0107]; EX1003, ¶156.

c. [18.b] pre-treating a surface of the substrate with at least a first group III reactant and a second group III reactant at a growth temperature of 900 to 1100° C. prior to introducing a nitrogen source;

Urashima discloses "*pre-treating a surface of the substrate with at least a first group III reactant … at a growth temperature of 900 to 1100° C. prior to introducing a nitrogen source*" for the reasons discussed in §VIII.A.1.c. EX1004, FIG. 1, Abstract, ¶¶[0016], [0025], [0028], [0081], [0083], [0089], [0109], [0119]; EX1003, ¶157.

As discussed in §VIII.A.1.d, Urashima discloses that the "*pre-treating a surface of the substrate*" step can include introducing **both** "*a first group III reactant and a second group III reactant*." EX1003, ¶158. Specifically, Urashima discloses that the group III metal particles introduced during the first step include "**at least one** metal element selected from among In, Ga and Al." EX1004,

¶¶[0025], [0018], [0037], [0081], [0089], [0117]. In (indium), Ga, (gallium), and Al (aluminum) are all examples of group III reactants. EX1003, ¶158; EX1001, 2:36-38. Thus, Urashima discloses that the "first step of depositing particles of a group III metal on a substrate surface" ("*pre-treating a surface of the substrate*"), EX1004, ¶[0016], includes depositing two or more of In, Ga, and Al ("*at least a first group III reactant and a second group III reactant*"). EX1003, ¶158.

Urashima further discloses that when depositing two or more of In, Ga, and Al in the first step, these different metals can either be deposited concurrently (as explained above) or in separate pre-treating steps, both of which still occur "*prior to introducing a nitrogen source*." *Id*., ¶159. Specifically, Urashima discloses "[t]he above method encompasses a case in which **the first step comprises two steps**, which are a first-stage step of flowing a gas containing vapor of at least one member selected from among metallo-organic material containing aluminum, metallo-organic material containing gallium and metallo-organic material containing indium, and a second-stage step of flowing a gas containing vapor of a different metallo-organic material from that of the first-stage step." EX1004, ¶¶[0043], [0047], [0128].

Thus, a POSA would have understood that Urashima's metallo-organic material containing gallium discloses the "*first group III reactant*," and Urashima's

metallo-organic material containing aluminum discloses the "*second group III reactant*." EX1003, ¶160.

d. [18.c] stopping a flow of the first group III reactant;

Urashima discloses this limitation for the reasons discussed in §VIII.A.1.c. EX1003, ¶162. Urashima discloses that the first step of pre-treating the substrate with group III reactants "**is followed by** a second step of nitriding the metal 1 deposited at a temperature T2 (where T2≧T1) **in an atmosphere that does not contain metallo-organic material** and does contain a nitrogen source." EX1004, ¶¶[0089], [0083], [0119], Abstract. Thus, as Dr. Shanfield explains, a POSA would have understood that flow of the group III reactants in Urashima's first step would be stopped before Urashima's second step such that these group III reactants were not present in the atmosphere during Urashima's nitriding process. EX1003, ¶162.

e. [18.d] introducing a nitrogen source …

Urashima discloses this limitation for the reasons discussed in §VIII.A.1.d. EX1004, FIG. 1, Abstract, ¶¶[0016], [0018], [0025], [0037], [0081], [0085], [0089], [0107]-[0108], [0113], [0117], [0123]; EX1003, ¶164.

f. [18.e] resuming the flow of the first group III reactant and reducing a flow of the second group III reactant;

The combination of Urashima and Manabe discloses this limitation. EX1003, ¶¶165-170. Urashima discloses stopping a flow of the group III reactants prior to introducing the nitrogen source. EX1004, ¶¶[0083], [0089], [0119].

However, Urashima does not expressly disclose stopping only the first group III reactant (Urashima's metallo-organic material containing gallium) while allowing the second group III reactant (Urashima's metallo-organic material containing aluminum) to continue flowing during the nitriding process. But Manabe discloses this limitation.

Manabe discloses an epitaxial process that is able to "mix a mixed gas comprising TMG [trimethylgallium], TMA [trimethylaluminium] …, which is introduced through the first gas pipe 28, with a NH3 and H2 mixed gas, introduced through the second gas pipe 29." EX1007, 4:39-43, FIG. 1. Thus, Manabe discloses the ability to continue flowing TMA during the introduction of the NH3 (ammonia) mixture—e.g., a nitrogen source. *Id*., 6:43-48 ("H2, NH3 and TMA at 15° C. were supplied on the single crystal sapphire substrate 60"), 5:5-8, 6:32-37; EX1003, ¶166. Manabe also discloses that after the TMA-nitrogen source mixture is introduced, for example "[o]ne minute later, **the supply of TMA was eased** to keep the sapphire substrate 60 at a temperature of 970° C." EX1007, 6:48-53. Manabe further discloses that after the supply of TMA began to be eased, a "**supply of** H2, NH3 and **TMG**" **was introduced** "for 60 min." *Id*.

As Dr. Shanfield explains, a POSA would have understood that TMA (trimethylaluminium) is an example of a "metallo-organic material containing aluminum" ("*the second group III reactant*") that Urashima discloses using in its

pre-treatment step. EX1003, ¶167. Similarly, a POSA would have also understood that TMG (trimethylgallium) is an example of a "metallo-organic material containing gallium" ("*the first group III reactant*") that Urashima also discloses using in its pre-treatment step. *Id*.

Therefore, when the teachings of Manabe are incorporated into Urashima's crystal growth technique, the resulting process would include allowing Urashima's metallo-organic material containing aluminum—e.g., TMA—("*the second group III reactant*") to continue to flow during the introduction of the nitrogen source, and subsequently ensuring that "the supply of TMA was eased" ("*reducing a flow of the second group III reactant*"). EX1007, 5:5-8, 6:32-53; EX1003, ¶168. Additionally, the resulting combined process would include re-introducing Urashima's metallo-organic material containing gallium—e.g., TMG—("*the first group III reactant*") after the gallium material was initially stopped prior to Urashima's introduction of the nitrogen source ("*resuming the flow of the first group III reactant*"), as taught by Manabe. EX1007, 6:48-53; EX1003, ¶168.

For the reasons discussed in §VIII.D.1, a POSA would have been motivated to use the techniques disclosed in Manabe for introducing and stopping the flow of group III compounds during growing of Urashima's nucleation layer and buffer layer. EX1003, ¶169.

g. [18.f] stopping the flow of the second group III reactant; and

The combination of Urashima and Manabe discloses this limitation. EX1003, ¶¶171-172. Manabe discloses that the "H2, NH3 and TMA" mixture is introduced "for one minute … to produce the AlN buffer layer [61]." EX1007, 6:43-53. Subsequently, "the supply of TMA was eased," and after which "an N layer 62 comprising N-type GaN of a thickness of about 7 μm was formed under the supply of H2, NH3 and TMG." *Id*. Dr. Shanfield explains that a POSA would have understood that the supply of TMA would have been completely stopped at some point ("*stopping the flow of the second group III reactant*") to allow for the formation of N layer 62 comprising N-type GaN and the application of subsequent layers 63-65—layers substantially devoid of aluminum. EX1003, ¶171; EX1007, FIG. 1.

h. [18.g] growing a buffer layer …

Urashima discloses this limitation for the reasons discussed in §VIII.A.1.e. EX1004, FIG. 1, ¶¶[0046], [0055], [0089]-[0090], [0108]-[0109], [0114]-[0115], [0140], claim 77; EX1003, ¶173.

3. Dependent Claim 19

The combination of Urashima and Manabe discloses claim 19 for the reasons discussed in §VIII.D.2.c. EX1004, ¶¶[0016], [0018], [0025], [0037], [0043], [0047], [0081], [0089], [0117], [0128]; EX1003, ¶174.

4. Dependent Claims 20-24

The combination of Urashima and Manabe discloses claims 20-24 for the reasons discussed for claims 4 and 7-10, respectfully. EX1003, ¶¶175-179.

E. Ground 5: Guo renders obvious claims 1-4, 6-9, and 11-14.

1. Independent Claim 1

Dr. Shanfield presents a chart in his declaration that he uses to illustrate the striking similarities and overall obviousness of claim 1. EX1003, ¶¶180-182.

a. [1.P]: A process for growing an epitaxial layer …

To the extent limiting, Guo discloses the preamble. EX1003, ¶¶183-187.

Guo discloses "**a method of making a semiconductor structure** including the steps of depositing a small amount of aluminum directly **on a silicon substrate** to provide an aluminum protected substrate, and then depositing a nucleation layer of a nitride semiconductor on the aluminum protected substrate … [and] further includes the step of epitaxially growing a buffer structure including one or more superlattices of nitride semiconductor on the nucleation layer, and then **epitaxially growing an operative structure including one or more gallium nitride-based semiconductors** on the buffer structure." EX1008, ¶¶[0011]-[0012], [0014], Abstract, claim 1, claim 34. As Dr. Shanfield explains, a POSA would have understood that the Guo's operative structure including gallium nitride-based semiconductors is "*an epitaxial layer*." EX1003, ¶184. Specifically, Dr. Shanfield

explains that a POSA would have understood that the claimed "*epitaxial layer*" can include a gallium nitride-based compound, such as Guo's gallium nitride-based semiconductors. EX1008, ¶[0011]; EX1003, ¶185.

Guo also discloses that its silicon substrate is "*a lattice mismatched substrate*": "**the lattice spacing of silicon is not well matched to that of gallium nitride**." EX1008, ¶¶[0007]-[0008].

b. [1.a] providing a substrate;

Figure 1 of Guo illustrates an example of a semiconductor structure formed using Guo's fabrication method. EX1008, ¶[0023]; EX1003, ¶188. As shown in Figure 1, Guo's "invention begins with a **doped silicon substrate 10**." EX1008, ¶¶[0031], [0011], [0014], Abstract, claim 1, claim 34. Figure 1 is annotated here with the substrate shaded yellow.

FIG. 1

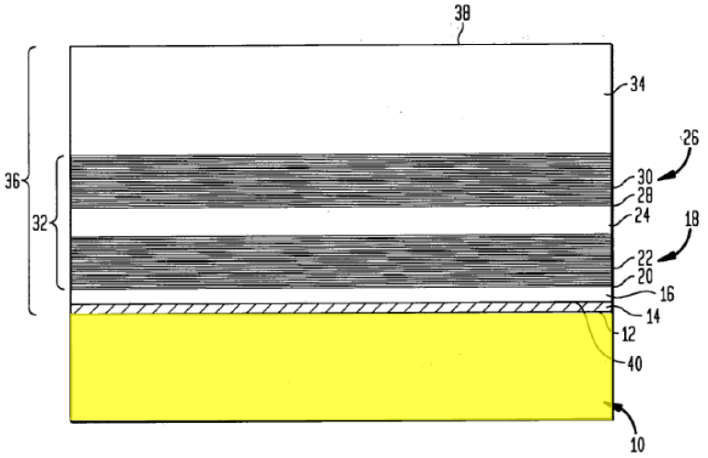

c. [1.b] pre-treating a surface of the substrate …;

First, Guo discloses "*pre-treating a surface of the substrate with at least one group III reactant*": "a method of making a semiconductor structure including the steps of **depositing a small amount of aluminum directly on a silicon substrate** to provide an aluminum protected substrate …." EX1008, ¶¶[0011], [0014],

Abstract, claim 1, claim 34. Guo explicitly refers to this depositing step as a "pretreatment of the substrate." *Id.*, ¶[0013]. Guo illustrates the results of this "*pre-treating*" step in Figure 1, where after substrate 10 is "exposed to an organo-aluminum compound, most preferably a lower alkyl aluminum compound such as trimethyl aluminum ('TMA') … [t]he aluminum compound decomposes to deposit a thin aluminum layer 14 on the top surface 12 of the wafer." *Id.*, ¶[0031]. Figure 1 is annotated here with the aluminum layer 14 shaded red.

As Dr. Shanfield explains, a POSA would have understood that Guo's aluminum layer 14 is a "*group III reactant*." EX1003, ¶191; EX1008, ¶[0048] ("the aluminum layer and aluminum-protected silicon substrate discussed above can be utilized in growth of … **III-V semiconductor structures**"); EX1001, 2:36-38 ("[t]he group III reactant is preferably selected from the group consisting of … **an aluminum reactant** …").

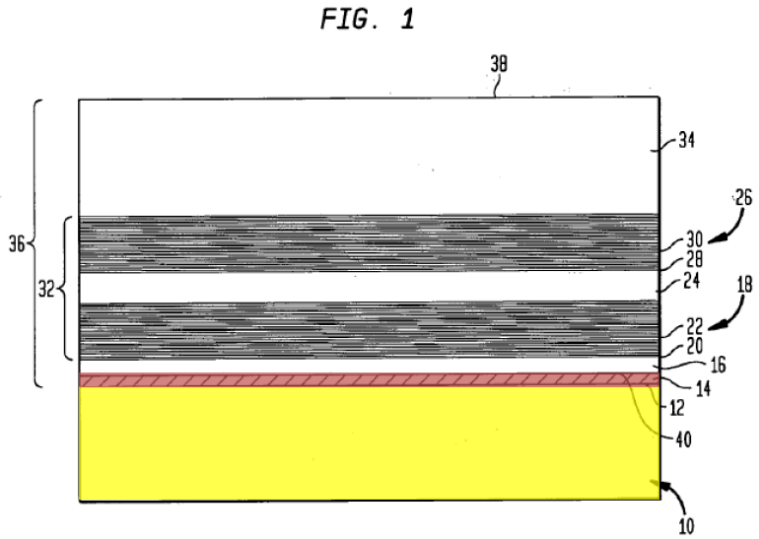

Guo also discloses that pretreatment of the substrate is performed "*at an elevated growth temperature*." EX1003, ¶192. Specifically, Guo discloses that "[i]n the first stage of the process, the wafer is brought to a temperature of about

600-900° C. in a conventional chemical vapor deposition apparatus and exposed to an organo-aluminum compound, most preferably a lower alkyl aluminum compound such as trimethyl aluminum ('TMA') in vapor form for a few seconds." EX1008, ¶[0031]. As Dr. Shanfield explains, a POSA would have understood that 600-900° C. represents "*an elevated growth temperature*," and that the step of depositing the aluminum compound on the substrate occurs at such a temperature, including 900° C. EX1003, ¶¶192-193.

To the extent that Guo does not explicitly disclose that the aluminum compound is actually deposited on the substrate at a temperature of 900° C, Dr. Shanfield explains that a POSA would have nonetheless found it obvious that the growth apparatus would have been 900° C—e.g., remained at 900° C, or higher, even after the wafer (substrate) is brought to a temperature of about 900° C—during the step of depositing the aluminum compound on the substrate. *Id.*, ¶194. Indeed, Guo discloses that certain steps after depositing the aluminum compound on the substrate are also performed at temperatures of 900° C—e.g., growing the nucleation layer at 900° C (EX1008, ¶[0032])—or above—e.g., growing a buffer structure at "about 950 to about 1100° C" (*id.*, ¶[0035]). Therefore, Dr. Shanfield explains that a POSA would have found it obvious that a temperature of 900° C or above would have been maintained throughout Guo's fabrication method following the initial heating of the substrate. EX1003, ¶194.

Guo also discloses that it was well-known to expose the substrate to metals, such as aluminum compounds, "**while the substrate is at an elevated temperature**, typically on the order of **700-1100° C**." EX1008, ¶[0004]. Therefore, a POSA would have also found it obvious to apply these well-known elevated temperatures to Guo's fabrication method such that Guo's pretreatment of the substrate is performed at temperatures above 900° C, including up to 1100° C. EX1003, ¶195. Dr. Shanfield explains that a POSA would have understood that such a modification to Guo's fabrication method amounts to subjecting known materials (III-V semiconductors) to known temperatures (900-1100° C) to yield predictable results (formation of high-quality gallium nitride-based semiconductors on silicon substrates). *Id.*, ¶195. As Dr. Shanfield explains, a POSA would have recognized that such a modification would have provided multiple benefits, including improved performance. *Id.*, ¶196. Dr. Shanfield explains that a POSA would have also had a reasonable expectation of success in implementing these well-known elevated temperatures in Guo's fabrication method, and would not have experienced any unreasonable technical hurdles in implementing this modification. *Id.*, ¶197.

Finally, Guo discloses that aluminum layer 14 (including "*group III reactant*") is introduced "*prior to introducing a group V reactant or a group VI reactant*." *Id.*, ¶198. As Dr. Shanfield explains, a POSA would have understood

this claim limitation to include instances where the group III reactant is introduced before the introduction of a nitrogen reactant, such as ammonia. *Id*. Guo discloses such an ordering of fabrication steps: "[first] depositing a small amount of aluminum directly on a silicon substrate to provide an aluminum protected substrate, **and then depositing a nucleation layer of a nitride semiconductor** on the aluminum protected substrate." EX1008, ¶¶[0011], [0013] ("pretreatment of the substrate with aluminum, **prior to deposition of the nucleation layer**, protects the substrate from etching **by ammonia**"), [0031], Abstract, claim 34.

Therefore, a POSA would have understood that Guo discloses, and/or renders obvious, this limitation. EX1003, ¶199.

d. [1.c] introducing a group V reactant …; and

Guo discloses "*introducing a group V reactant … to grow a nucleation layer*." EX1003, ¶200. Specifically, Guo discloses that after pretreatment of the substrate (depositing aluminum on the silicon substrate), "the aluminum-protected substrate is exposed to a mixture of **an organo-metallic compound**, most preferably an organo-aluminum compound, and **ammonia**, together with a carrier gas, so as to deposit **a thin layer 16 of a nitride semiconductor**, most preferably AlN." EX1008, ¶¶[0032] ("Nucleation layer 16"), [0011], [0012], Abstract, claim 34. As Dr. Shanfield explains, a POSA would have understood that Guo's ammonia is a "*group V reactant*." EX1003, ¶200; EX1008, ¶[0048] ("**III-V**

semiconductors [are] used in the preferred embodiments"); EX1001, 2:59-60 ("[p]referably, the group V reactant contains a nitrogen reactant"), 3:22-25 ("preferably ammonia").

Guo also discloses that introducing the organo-metallic compound and ammonia ("*introducing a group V reactant*") results in the nucleation layer being grown "*on the surface of the substrate*." EX1008, ¶¶[0011] ("**depositing a nucleation layer** of a nitride semiconductor **on the aluminum protected substrate**"); [0032], claim 34. Figure 1 is annotated here with the nucleation layer 16 shaded blue.

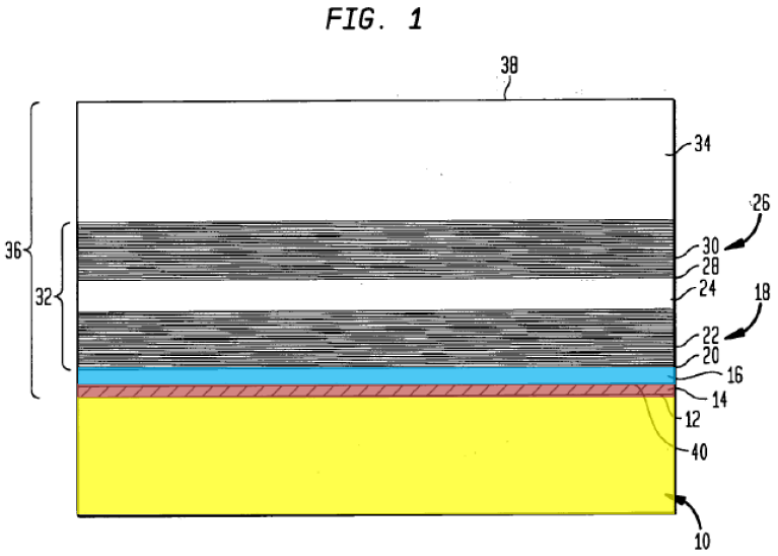

e. [1.d] growing a buffer layer …

Guo discloses "*growing a buffer layer on said nucleation layer*": "epitaxially **growing a buffer structure** including one or more superlattices of nitride semiconductor **on the nucleation layer**." EX1008, ¶¶[0011]-[0012], [0014], [0037], Abstract, claim 34.

Guo also discloses "*said buffer layer providing a surface upon which said epitaxial layer is grown*": "**epitaxially growing an operative structure** including one or more gallium nitride-based semiconductors **on the buffer structure**." EX1008, ¶¶[0011], [0014], [0037], claim 34. As discussed, in §VIII.E.1.a, a POSA would have understood that Guo's operative structure including one or more gallium nitride-based semiconductors is "*an epitaxial layer*." EX1003, ¶204.

FIG. 1

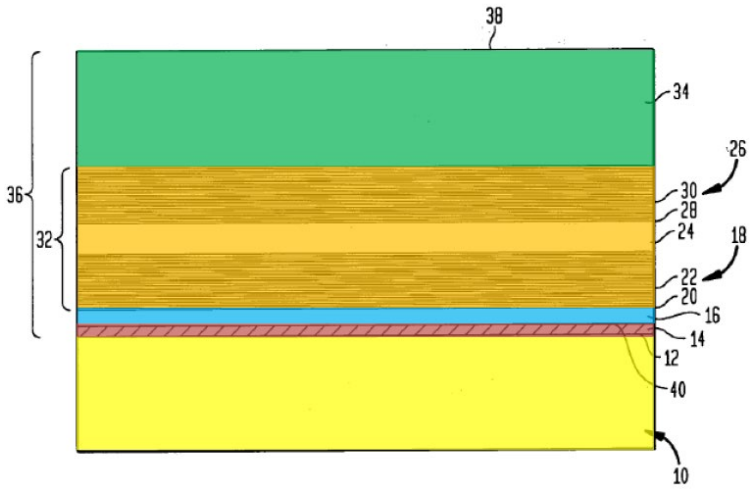

Figure 1 is annotated here with the buffer structure 32 shaded orange and the operative structure 34 shaded green.

2. Dependent Claim 2

Guo discloses claim 2 for the reasons discussed in §VIII.E.1.b. EX1008, Abstract ("A nitride semiconductor is grown on a **silicon substrate** …"), ¶¶[0006] ("**sapphire** wafers" and "**silicon carbide** wafers" are well-known), [0011], [0014], [0031]; EX1003, ¶207.

3. Dependent Claim 3

Guo discloses claim 3. EX1003, ¶¶208-209. Guo discloses that its method of making a semiconductor structure includes "depositing a small amount of **aluminum** directly on a silicon substrate to provide an aluminum protected substrate." EX1008, ¶¶[0011], [0013]-[0014], [0031], Abstract, claims 1, 34. Guo also discloses that "the aluminum layer and aluminum-protected silicon substrate discussed above can be utilized in growth of other nitride semiconductor structures and **other III-V semiconductor structures**." *Id.*, ¶[0048]. Further, Guo explains that it was well-known to deposit compounds such as "**aluminum indium gallium** nitride, **indium gallium** nitride or **aluminum gallium** nitride" on a silicon substrate. *Id.*, ¶[0008]. Thus, as Dr. Shanfield explains, a POSA would have found it obvious to additionally, or alternatively, use a gallium reactant and/or an indium reactant in the formation of these "other III-V semiconductor structures." *Id.*, ¶[0048]; EX1003, ¶209.

4. Dependent Claim 4

Guo discloses claim 4 for the reasons discussed for claim 3. EX1008, ¶¶[0008], [0011], [0013]-[0014], [0031] (substrate 10 is "exposed to an organo-aluminum compound, most preferably a lower alkyl aluminum compound such as **trimethyl aluminum ('TMA')**…"), [0048], Abstract, claims 1, 34; EX1003, ¶210.

5. Dependent Claim 6

Guo discloses claim 6 for the reasons discussed in §VIII.E.1.c and for claim 3. EX1008, ¶¶[0011], [0013] ("… **pretreatment of the substrate with aluminum** … protects the substrate from etching by ammonia"), [0014], [0031], [0048], Abstract, claims 1, 34; EX1003, ¶211. Guo also explains that it was well-known to deposit compounds such as "**aluminum gallium** nitride" on a silicon substrate. EX1008, ¶[0008]. Thus, as Dr. Shanfield explains, a POSA would have found it obvious to use both an aluminum reactant and a gallium reactant during Guo's pretreatment step. EX1003, ¶211. Moreover, a POSA would have understood that using both aluminum and gallium would have the additional benefit of incorporating compressive stress-inducing superlattices. *Id*.

6. Dependent Claim 7

Guo discloses claim 7. EX1003, ¶¶212-213. Guo discloses "deposit[ing] **a thin layer 16 of a nitride semiconductor**, **most preferably AlN.**" EX1008, ¶¶[0032], [0011], [0012], Abstract, claim 34. Guo also discloses that it was well-known to deposit compounds such as "**aluminum gallium nitride**" ("*AlGaN*") on a silicon substrate. *Id.*, ¶[0008]. Thus, as Dr. Shanfield explains, a POSA would have found it obvious to additionally, or alternatively, use AlGaN in the formation of these "other nitride semiconductor structures and other III-V semiconductor structures." *Id*., ¶[0048]; EX1003, ¶213.

7. Dependent Claim 8

Guo discloses claim 8. EX1003, ¶¶214-215. Guo discloses that in some instances, "the step of growing the buffer structure includes growing **an intermediate layer of a gallium nitride-based semiconductor** over the first superlattice of the buffer structure and growing a second superlattice of nitride semiconductors over the intermediate layer." EX1008, ¶[0012], [0011], [0014]-[0015], [0037], Abstract, claim 34. Additionally, "the superlattices desirably are formed from multiple layers of semiconductor compounds according to the formula **AlRGa(1−R)N, where R is from 0 to 1** inclusive"—e.g., GaN, when R is 0. *Id*., ¶[0015], [0034]-[0036]; EX1003, ¶215. Guo also discloses that, in some instances, "the intermediate layer and second superlattice can be omitted." EX1008, ¶[0048]. Thus, Dr. Shanfield explains that a POSA would have understood that Guo's buffer structure can include one or more layers of GaN. EX1003, ¶215.

8. Dependent Claim 9

Guo discloses claim 9 for the reasons discussed in §VIII.E.1.e. EX1003, ¶¶216-217. Guo discloses "epitaxially growing an operative structure ['*said epitaxial layer*'] including one or more **gallium nitride-based semiconductors** on the buffer structure." EX1008, ¶¶[0011]-[0012], [0014], [0037], claim 34. Guo also discloses that "the aluminum layer and aluminum-protected silicon substrate

discussed above can be utilized in growth of **other nitride semiconductor structures** and **other III-V semiconductor structures**." *Id.*, ¶[0048]. As one example, Guo discloses that the operative substrate can also include a layer of "**Al0.3Gao0.7N**." *Id.*

9. Dependent Claim 11

Guo discloses claim 11 for the reasons discussed in §VIII.E.1.c. EX1008, ¶¶[0004] ("the substrate is exposed to an atmosphere containing organic compounds of the metals and a reactive, nitrogen-containing gas, most commonly ammonia, **while the substrate is at an elevated temperature**, typically on the order of 700-**1100° C**"), [0031] ("In the first stage of the process, the wafer is brought to a temperature of about 600-**900° C**. in a conventional chemical vapor deposition apparatus and exposed to an organo-aluminum compound …"); EX1003, ¶218.

10. Dependent Claim 12

Guo discloses claim 12 for the reasons discussed in §VIII.E.1.c. EX1003, ¶¶21-221.

First, Guo discloses that nucleation layer 16 is "deposited at substrate temperature on the order of 600-**900° C**." EX1008, ¶[0032]. Second, Guo discloses that intermediate layer 24 "is deposited by exposing the substrate to a mixture of an organo-gallium compound, ammonia and a carrier gas, at a temperature of about

950 to about 1100° C." *Id.*, ¶[0035]. Guo explains that intermediate layer 24 is included in buffer structure 32. *Id.*, ¶[0037]; EX1003, ¶220.

Additionally, or alternatively, Guo also discloses that it was well known that a substrate can be "exposed to an atmosphere containing organic compounds of the metals and a reactive, nitrogen-containing gas, most commonly ammonia, **while the substrate is at an elevated temperature**, typically on the order of 700-**1100° C.**" EX1008, ¶[0004]. Thus, as Dr. Shanfield explains, a POSA would have found it obvious that an elevated temperature of 900° C-1100° C could have been maintained throughout Guo's fabrication method, including during "*growing a nucleation layer*" and "*growing a buffer layer*." EX1003, ¶221.

11. Dependent Claim 13

Guo discloses claim 13. EX1003, ¶¶222-223. Guo discloses "**depositing the nitride semiconductor** to form the nucleation layer." EX1008, ¶¶[0012], [0011], [0032], Abstract, claim 34. Guo explains that ammonia can be "used to deposit the nitride semiconductors." EX1008, ¶¶[0038], [0031]-[0032]. A POSA would have understood that Guo's nitride semiconductor (e.g., ammonia) is a "*group V reactant*," as explained in §VIII.E.1.d. *Id.*, ¶[0048]; EX1003, ¶223. As Dr. Shanfield explains, POSA would have understood that ammonia is an example of "*a group V hydride*." EX1003, ¶223; EX1001, 2:60-62 ("a group V hydride, most preferably ammonia, arsine or phosphine").

12. Dependent Claim 14

Guo discloses claim 14 for the reasons discussed for claim 13. EX1008, ¶¶[0031], [0032], [0038], claim 66; EX1003, ¶224.

F. Ground 6: The combination of Guo and Ashby renders obvious claims 5, 10, and 17.

1. A POSA would have been motivated to combine Guo and Ashby.

a. Modifying Guo's method of making a semiconductor structure to incorporate Ashby's cleaning step

Guo discloses "a method of making a semiconductor structure" that includes several fabrication steps. EX1008, ¶¶[0011]-[0012], Abstract, claim 34. Guo also discloses that "[o]ptionally, between deposition of layers having differing compositions as, for example, between deposition of the aluminum layer 14 and the buffer layer 16, and both before and after deposition of each superlattice, the chamber can be purged of metals from the preceding layer by flushing it with a mixture of the hydrogen or nitrogen carrier gas and ammonia for a prolonged period." *Id.*, ¶[0039]. But, Guo does not disclose that this purging step can be performed as part of a preheating step prior to Guo's "pretreatment of the substrate with aluminum." *Id.*, ¶[0013]; EX1003, ¶226.

Nonetheless, as Dr. Shanfield explains, a POSA would have recognized the benefits to also performing this purging step prior to pretreatment of the substrate with aluminum. EX1003, ¶227. For example, a POSA would have recognized that

an effective contaminant purging operation prior to the deposition of the protective aluminum layer would be important to producing high quality epitaxy. *Id*. Thus, Dr. Shanfield explains that a POSA would have looked to the prior art for guidance on how to implement such an initial purging step. *Id*. Ashby is such a prior art reference.

Like Guo, Ashby discloses a "process of growing a material on a substrate, particularly growing a Group II-VI or Group III-V material" (EX1009, Abstract) including "producing materials with relatively few defects" (*id.*, ¶[0013]). Specifically, Ashby discloses an initial step where "[t]he substrate is cleaned in the growth chamber and the surface prepared for growth." *Id.*, ¶¶[0028], [0039]. Ashby explains that "[o]ne typical pre-growth treatment involves heating in ambient H2 for less than approximately 10 minutes." *Id.*

As Dr. Shanfield explains, based on the teachings of Ashby, a POSA would have been motivated to modify Guo to use an initial cleaning step prior to Guo's pretreatment of the substrate with aluminum. EX1003, ¶229. Indeed, Ashby explains that its cleaning step is a first step in order to get "the surface prepared for growth." EX1009, ¶¶[0028], [0039].

Ashby and Guo also disclose using the same or similar crystal growth techniques. *Id.,* ¶[0018] ("metalorganic chemical vapor deposition (MOCVD)"); EX1008, ¶[0037] ("MOCVD techniques."). Additionally, Ashby and Guo both

disclose that their respective fabrication methods are used to form III-V semiconductors. EX1009, Abstract; EX1008, ¶[0048]. Further, both Ashby and Guo disclose an initial step of heating the substrate. EX1009, ¶[0039] ("[t]he substrate was cleaned and the surface prepared for growth in-situ by heating the wafer to 1080° C."); EX1008, ¶[0031] ("[i]n the first stage of the process, the wafer is brought to a temperature of about 600-900° C.").

Thus, Dr. Shanfield explains that a POSA would have recognized that Ashby's techniques are applicable to Guo, and that modifying Guo to implement an initial H2 (hydrogen) cleaning step would have required minimal modifications. EX1003, ¶231. In the combined system, Guo's initial step of heating the substrate would have also included cleaning the substrate with hydrogen at the elevated temperature. *Id.* This would result in improved quality of the epitaxial layers in Guo's fabrication method by cleaning the substrate with a pre-growth treatment in hydrogen prior to growing the group III element. *Id*.

As Dr. Shanfield explains, a POSA would have been further motivated to combine Guo and Ashby because both are in the same general field of semiconductor crystal growth via an epitaxial process, and address the same problem—formation of a semiconductor structure with relatively few defects. EX1008, ¶¶[0013], [0038]; EX1009 ¶[0013]; EX1003, ¶232. Accordingly, a POSA

would have had a reasonable expectation of success in incorporating Ashby's cleaning step into Guo's initial step of preheating the substrate. EX1003, ¶232.

As explained by Dr. Shanfield, a POSA would not have experienced any unreasonable technical hurdles in implementing these modifications. *Id.*, ¶233. Additionally, a POSA would have understood that modifying Guo's method to use Ashby's cleaning step would merely amount to combining prior art elements (Guo's fabrication method including an initial substrate heating step, and Ashby's initial substrate cleaning step) according to known methods (cleaning the substrate using hydrogen during an initial heating step) to yield predictable results (e.g., formation of a semiconductor structure with relatively few defects). *Id*.

b. Using group II and VI reactants in Guo's method of making a semiconductor structure

Guo discloses methods for forming group III-V semiconductors. EX1008, ¶¶[0011], [0030], [0048], Abstract. Guo additionally discloses that "[n]umerous variations and combinations of the features set forth above can be utilized without departing from the present invention." *Id*., ¶¶[0048], [0057]. But, Guo does not disclose an exhaustive list of what variations and combinations of materials could be used, or why such variations and combinations may be used. EX1003, ¶234.

As explained by Dr. Shanfield, a POSA would have thus looked to the prior art for guidance on what variations and combinations of materials may be used in Guo's fabrication method. *Id.*, ¶235. Ashby is such a prior art reference.

Like Guo, Ashby discloses a "process of growing a material on a substrate," which is applicable to "growing a … Group III-V material." EX1009, Abstract, ¶[0013]. But, Ashby also discloses that its method can be used for "growing a Group II-VI … material." *Id*. Based on the teachings of Ashby, a POSA would have been motivated to modify Guo's fabrication method to generate a Group II-VI material. EX1003, ¶236. As Dr. Shanfield explains in his declaration, the motivations for combining Guo and Ashby mirror those discussed in §VIII.B.1. *Id*., ¶¶237-241.

2. Dependent Claim 5

The combination of Guo and Ashby discloses claim 5. EX1003, ¶¶242-243. Ashby discloses growing Group II-VI materials, which "include at least one of the Group II elements **Zn**, **Cd**, and Hg." EX1009, ¶[0013]. As Dr. Shanfield explains, a POSA would have understood that Cd is formed using "*a cadmium reactant*," and that Zn is formed using "*a zinc reactant*." EX1003, ¶¶242-243. As Dr. Shanfield explains in his declaration, a POSA would have been motivated to use each of these reactants in Guo's fabrication method. *Id*.

3. Dependent Claim 10

The combination of Guo and Ashby discloses claim 10. EX1003, ¶¶244-246.

First, both Guo and Ashby disclose "*preheating said substrate*." EX1008, ¶[0031] ("[i]n the first stage of the process, the wafer is brought to a temperature of about 600-900° C"); EX1009, ¶[0039] ("[t]he substrate was cleaned and the surface prepared for growth in-situ by heating the wafer to 1080° C."). Ashby also discloses that its preheating step includes cleaning the substrate using "*hydrogen*": "**The substrate is cleaned** in the growth chamber and the surface prepared for growth. One typical pre-growth treatment involves **heating in ambient H2**." EX1009, ¶¶[0028], [0039] ("flowing 10 liters/minute **H2**").

As explained by Dr. Shanfield, a POSA would have understood that Ashby's cleaning step (including "*preheating said substrate*") is performed "*prior to pre-treating the surface of the substrate*," because Ashby discloses that its cleaning step is a "pre-growth treatment." EX1003, ¶246; EX1009, ¶[0028]. A POSA would have understood that the growth steps that take place after Ashby's cleaning step would include Guo's pretreatment of the substrate with aluminum ("*pre-treating the surface of the substrate*"), at least because Guo's pretreatment results in a layer of aluminum being deposited on the substrate. EX1003, ¶246; EX1008, ¶[0031]. For the reasons discussed in §VIII.F.1.a, a POSA would have been motivated to use Ashby's cleaning step in Guo's fabrication method. EX1003, ¶246.

4. Dependent Claim 17

The combination of Guo and Ashby discloses claim 17. EX1003, ¶247. Ashby discloses using "at least one of the Group VI elements O, **S**, Se, and **Te**."

EX1009, ¶[0013]. As Dr. Shanfield explains, a POSA would have understood that Te is formed using "*a tellurium reactant*," and that S is formed using "*a sulfur reactant*." EX1003, ¶247. As Dr. Shanfield explains in his declaration, a POSA would have been motivated to use each of these reactants in Guo's fabrication method. *Id*.

IX. DISCRETIONARY CONSIDERATIONS UNDER 314(A) AND 325(D) STRONGLY FAVOR INSTITUTION

If IQE's Petition in IPR2024-00609 is pending at the time the Board issues its decisions on institution of Qorvo's present petition and contemporaneously-filed Contingent Motion for Joinder, Qorvo does not believe there are any issues worthy of discretionary denial because Qorvo is adopting the grounds of, and seeking to join, IQE's IPR2024-00609. In the event IQE's Petition is terminated before the Board considers Qorvo's Petition and Contingent Motion for Joinder, the Board should <u>not</u> discretionarily deny institution of this Petition for the reasons discussed below. In either case, the *Advanced Bionics*, *General Plastic*, and *Fintiv* factors all favor institution.

A. The *Advanced Bionics* Factors Favor Institution

Applying the two-part framework from *Advanced Bionics, LLC v. MED-EL Elektromedizinische Geräte GmbH* demonstrates that denial under §325(d) is not appropriate. IPR2019-01469, Paper 6 at 8-9 (P.T.A.B. Feb. 13, 2020) (precedential). Under part one, the same or substantially the same art or arguments were *not* previously presented to the Office, ending the inquiry in favor of institution. The "new, noncumulative prior art asserted in the Petition" strongly favors IPR. *Oticon Medical AB v. Cochlear Ltd*., IPR2019-00975, Paper 15 at 20 (P.T.A.B. Oct. 16, 2019) (§§II.B and II.C precedential). Moreover, the Petition presents extensive additional evidence and facts not before the USPTO, including the Shanfield Declaration (EX1003) and supporting references, which demonstrate the Challenged Claims' unpatentability. Should Patent Owner attempt to analogize any previously considered art or arguments to those presented here, Petitioner reserves the right to respond.

B. The *General Plastics* Factors Favor Institution

If IQE's IPR2024-00609 has been instituted at the time this Petition is considered, the Board has indicated that the factors outlined by *General Plastics* are not particularly relevant "where a different petitioner files a 'me-too' or 'copycat' petition in conjunction with a timely motion to join." *See*, *e.g.*, *Celltrion, Inc. v. Genentech, Inc.*, IPR2018-01019, Paper 11 at 9-11; *Pfizer, Inc. v Genentech,*

Inc., IPR2017-02063, Paper 25 at 7-8. Through grant of joinder, the Board is simply offered the opportunity to ensure that IPR2024-00609 is not prematurely terminated.

If IQE's IPR2024-00609 has been terminated before an institution decision, the *General Plastics* factors do not support denying institution. ***Factors 1/2 support institution*** because Qorvo has never previously filed a petition challenging any claim of the '360 Patent. ***Factor 3 supports institution*** because Patent Owner has not filed a preliminary response in IPR2024-00609. ***Factors 4/5 support institution*** because the grounds herein track those of IQE's Petition in IPR2024-00609 and thus cannot be said to have been delayed. ***Factor 6 supports institution*** because the instant Petition will not consume any Board resources beyond those already attributable to the IQE IPR. ***Factor 7 supports institution*** because there is nothing to prevent the Board from issuing a final determination on this Petition within one year after institution.

C. The *Fintiv* Factors Favor Institution

If IQE's IPR2024-00609 has been instituted at the time this Petition is considered in view of the pendency of the *Akoustis-Qorvo* litigation, Petitioner submits the *Fintiv* analysis would be moot and should not serve to deny institution and joinder. And, in any event, the *Fintiv* factors do not support denying institution of this Petition at least because of Petitioner's *Sotera*-type stipulation below. *See*

Director Vidal's June 21, 2022 interim procedure for discretionary denials (the "June 21st Memo"), which confirms the PTAB will not discretionarily deny institution where Petitioner has made a *Sotera*–type stipulation. June 21st Memo, 7-8.

Moreover, a holistic analysis of the individual *Fintiv* factors confirms denial would be inappropriate.

Factor 1 is neutral or supports institution. While no motion to stay has been filed in the *Akoustis-Qorvo* litigation, Qorvo has filed a Motion to Dismiss under FRCP 12(b)(6) (EX1030, EX1014, 5 (docket # 15)) which it expects will be granted. When granted, the case will be practically stayed.

Factor 2 is neutral or favors institution as there will be no trial (at least near-term) if the case is dismissed/stayed. Even if not dismissed/stayed, the Final Written Decision related to this Petition (alone or if joined to IQE's IPR2024-00609 would issue in the fall of 2025. While trial in the *Akoustis-Qorvo* litigation is currently set to begin in January of 2025, that date is subject to change. Indeed, the median time-to-trial in the Eastern District of Texas is almost two years. EX1028. Applying this metric to the *Akoustis-Qorvo* litigation would result in a trial not earlier than April of 2025. Moreover, even this date is subject to revision as the judge assigned to the *Akoustis-Qorvo* litigation (Judge Gilstrap) currently has 676 active cases on his docket. EX1018. All of this means that it is as likely as

not that the Final Written Decision will issue before any trial in the *Akoustis-Qorvo* litigation.

Factor 3 is neutral or favors institution because, at institution, neither the parties nor the court will have invested significant resources in the *Akoustis-Qorvo* litigation. EX1017. Currently, the court has not made any substantive rulings (*e.g.*, a claim construction order) and the claim construction process has only just begun. While in the intervening months—if the matter is not dismissed—the claim construction process will proceed, it is likely that an institution decision will precede the final completion of fact and expert discovery and the completion of dispositive motion briefing.

Factor 4 strongly favors institution as more claims are challenged here (*compare* Grounds with EX0029, ¶34) and in view of Petitioner's *Sotera* stipulation. First, the Petition challenges all 24 claims of the '360 patent whereas only claims 1-4, 6-7, and 9-14 are asserted in the *Akoustis-Qorvo* litigation. Second, Petitioner stipulates that, if the Board institutes this Petition, Petitioner will not pursue invalidity of the Challenged Claims in the *Akoustis-Qorvo* litigation on the grounds raised, or that reasonably could have been raised, in this IPR Petition.

Factor 5 is neutral as Petitioner is the defendant in the *Akoustis-Qorvo* litigation.

Factor 6 strongly favors institution because the merits of the Petition are strong. *See supra*; June 2022 Memo, 3-5. The combination of the admittedly known features, the fact that the allegedly novel features are rarely if ever actually recited in the claims, and the strength of the applied references evidence the compelling merits of the Petition.

X. CONCLUSION

For the reasons above, *inter partes* review and cancellation of claims 1-24 of U.S. Patent No. 7,250,360 are requested.

Dated: April 17, 2024

Respectfully submitted,

/s/ Robert M. Masters
Robert M. Masters (Reg. No. 35,603)
Timothy Cremen (Reg. No. 50,855)
Jonathan R. DeFosse (*pro hac vice* to be requested)
SHEPPARD, MULLIN, RICHTER & HAMPTON LLP
2099 Pennsylvania Avenue, NW, Suite 100
Washington, DC 20006-6801
Tel.: 202.747.1900
Fax: 202.747.1901
LegalTM-Qorvo-IPR@sheppardmullin.com

Counsel for Petitioner Qorvo Inc.

CLAIM APPENDIX

1. **[1.p]** A process for growing an epitaxial layer on a lattice mismatched substrate comprising the steps of:

[1.a] a) providing a substrate;

[1.b] b) pre-treating a surface of the substrate with at least one group III reactant or at least one group II reactant at an elevated growth temperature prior to introducing a group V reactant or a group VI reactant;

[1.c] c) introducing a group V reactant or a group VI reactant to grow a nucleation layer on the surface of the substrate; and

[1.d] d) growing a buffer layer on said nucleation layer, said buffer layer providing a surface upon which said epitaxial layer is grown.

2. The process of claim 1, wherein said substrate is selected from the group consisting of silicon, sapphire and SiC.

3. The process of claim 1, wherein said group III reactant is selected from the group consisting of a gallium reactant, an aluminum reactant, a boron reactant, and an indium reactant.

4. The process of claim 3, wherein said group III reactant is selected from the group consisting of triethyl gallium, trimethyl gallium, triethylaluminum, trimethyl aluminum, triethylboron, trimethylboron, triethylindium and trimethylindium.

5. The process of claim 1, wherein said group II reactant is a cadmium reactant or a zinc reactant.

6. The process of claim 1, wherein said step of pre-treating includes pre-treating the surface of the substrate with an aluminum reactant and a gallium reactant.

7. The process of claim 6, wherein said nucleation layer is AlN or AlGaN.

8. The process of claim 1, wherein said buffer layer is GaN.

9. The process of claim 1, wherein said epitaxial layer includes a compound selected from the group comprising AlN, GaN, AlGaN, BGaN, BInN, BAlN, CdTe, and ZnS.

10. The process of claim 1, further comprising the step of preheating said substrate in hydrogen prior to pre-treating the surface of the substrate with at least one group III reactant or at least one group II reactant.

11. The process of claim 1, wherein said elevated growth temperature is 900 to 1100° C.

12. The process of claim 11, wherein the step of introducing a group V reactant or a group VI reactant includes growing a nucleation layer at a growth temperature of 900 to 1100° C. and the step of growing a buffer layer includes growing a buffer layer at a growth temperature of 900 to 1100° C.

13. The process of claim 1, wherein said group V reactant is a group V hydride.

14. The process of claim 13, wherein said group V hydride is selected from the group consisting of ammonia, arsine, and phosphine.

15. The process of claim 1, wherein said group V reactant is a group V organic precursor.

16. The process of claim 15, wherein said group V organic precursor is tertiarybutylarsine or tertiarybutylphosphine.

17. The process of claim 1, wherein said group VI reactant is a tellurium reactant or a sulfur reactant.

18. **[18.p]** A process for growing an epitaxial layer on a lattice mismatched substrate comprising the steps of:

[18.a] a) providing a substrate;

[18.b] b) pre-treating a surface of the substrate with at least a first group III reactant and a second group III reactant at a growth temperature of 900 to 1100° C. prior to introducing a nitrogen source;

[18.c] c) stopping a flow of the first group III reactant;

[18.d] d) introducing a nitrogen source to grow a nucleation layer on the surface of the substrate;

[18.e] e) resuming the flow of the first group III reactant and reducing a flow of the second group III reactant;

[18.f] f) stopping the flow of the second group III reactant; and

[18.g] g) growing a buffer layer on said nucleation layer, said buffer layer providing a surface upon which said epitaxial layer is grown.

19. The process of claim 18, wherein said first group III reactant is a gallium reactant and said second group III reactant is an aluminum reactant.

20. The process of claim 19, wherein said gallium reactant is triethylgallium and said aluminum reactant is trimethylaluminum.

21. The process of claim 18, wherein said nucleation layer is AlN or AlGaN.

22. The process of claim 18, wherein said buffer layer is GaN.

23. The process of claim 18, wherein said epitaxial layer includes a compound selected from the group comprising AlN, GaN, AlGaN, BGaN, BInN, and BAlN.

24. The process of claim 18, further comprising the step of preheating said substrate in hydrogen prior to pre-treating the surface of the substrate with the first group III reactant and the second group III reactant.

CERTIFICATE OF COMPLIANCE

Pursuant to 37 C.F.R. §42.24(d), Petitioner certify that this petition complies with the type-volume limitation of 14,000 words, includes 13,894 words, as measured by Microsoft Word, exclusive of the table of contents, table of authorities, mandatory notices under §42.8, certificates of service, word count, or appendix of exhibits.

Additionally, this petition complies with 37 C.F.R. § 42.6(a) and has been prepared using Microsoft® Word 2016 in 14-point Times New Roman.

Date: April 17, 2024

/s/ Robert M. Masters
Robert M. Masters (Reg. No. 35,603)
Counsel for Petitioner Qorvo Inc.

2099 Pennsylvania Avenue, NW
Suite 100
Washington, DC 20006-6801
Tel.: 202.747.1900
Fax: 202.747.1901
LegalTM-Qorvo-IPR@sheppardmullin.com

CERTIFICATE OF SERVICE

The undersigned hereby certifies that a true and correct copy of the foregoing was served in its entirety on April 17, 2024, on the Patent Owner at the following addresses of record as listed in the Patent Center, via Priority Mail Express® or Express Mail:

23294 - WILLIAM A BLAKE LLC 19814 Falling Spring CT Laytonsville, MD 20882 *Official Correspondence Address*	CORNELL RESEARCH FOUNDATION, INC. - CCTEC 395 PINE TREE ROAD, SUITE 310 ITHACA, NY 14850 *Patent Owner Correspondence Address*

The undersigned certifies that on April 17, 2024, a true and correct copy of the foregoing was also sent via electronic mail to the attorneys of record for Plaintiff in the concurrent litigation matter:

John B. Campbell	jcampbell@McKoolSmith.com
James E. Quigley	jquigley@McKoolSmith.com
George T. Fishback, Jr.	gfishback@McKoolSmith.com
Caroline Burks	cburks@McKoolSmith.com
Samuel F. Baxter	sbaxter@McKoolSmith.com
Jennifer L. Truelove	jtruelove@McKoolSmith.com

Date: April 17, 2024

/s/ Robert M. Masters

Robert M. Masters (Reg. No. 35,603)
SHEPPARD, MULLIN, RICHTER & HAMPTON LLP
2099 Pennsylvania Avenue, Suite 100
Washington, DC 20006
Tel.: (202) 747-1900
Fax: (202) 747-1901

LegalTm-Qorvo-IPR@sheppardmullin.com

Counsel for Petitioner Qorvo, Inc.