AO 120 (Rev. 08/10)

| TO: Mail Stop 8<br>Director of the U.S. Patent and Trademark Office<br>P.O. Box 1450<br>Alexandria, VA 22313-1450 | REPORT ON THE FILING OR DETERMINATION OF AN ACTION REGARDING A PATENT OR TRADEMARK |
|---|---|

In Compliance with 35 U.S.C. § 290 and/or 15 U.S.C. § 1116 you are hereby advised that a court action has been filed in the U.S. District Court Central District of California on the following

☐ Trademarks or ☑ Patents. ( ☐ the patent action involves 35 U.S.C. § 292.):

| DOCKET NO. | DATE FILED | U.S. DISTRICT COURT |
|---|---|---|
| 2:23-cv-02294 | 3/28/2023 | Central District of California |

| PLAINTIFF | DEFENDANT |
|---|---|
| Laser Spallation Technologies, LLC | The Boeing Company |

| PATENT OR TRADEMARK NO. | DATE OF PATENT OR TRADEMARK | HOLDER OF PATENT OR TRADEMARK |
|---|---|---|
| 1 7,487,684 | 2/10/2009 | The Regents of the University of California |
| 2 | | |
| 3 | | |
| 4 | | |
| 5 | | |

In the above—entitled case, the following patent(s)/ trademark(s) have been included:

| DATE INCLUDED | INCLUDED BY ☐ Amendment ☐ Answer ☐ Cross Bill ☐ Other Pleading | |
|---|---|---|
| PATENT OR TRADEMARK NO. | DATE OF PATENT OR TRADEMARK | HOLDER OF PATENT OR TRADEMARK |
| 1 | | |
| 2 | | |
| 3 | | |
| 4 | | |
| 5 | | |

In the above—entitled case, the following decision has been rendered or judgement issued:

| DECISION/JUDGEMENT |
|---|
| |

| CLERK | (BY) DEPUTY CLERK | DATE |
|---|---|---|
| | | |

**Copy 1—Upon initiation of action, mail this copy to Director Copy 3—Upon termination of action, mail this copy to Director**
**Copy 2—Upon filing document adding patent(s), mail this copy to Director Copy 4—Case file copy**

# PETITION TO ACCEPT UNINTENTIONALLY DELAYED PAYMENT OF MAINTENANCE FEE IN AN EXPIRED PATENT (37 CFR 1.378(b))

| Patent Number | Issue Date | Application Number | Filing Date | Docket Number (if applicable) |
|---|---|---|---|---|
| 7487684 | 10-Feb-2009 | 11504981 | 15-Aug-2006 | |

CAUTION: Maintenance fee (and surcharge, if any) payment must correctly identify: (1) the patent number and (2) the application number of the actual U.S. application leading to issuance of that patent to ensure the fee(s) is/are associated with the correct patent. 37 CFR 1.366(c) and (d).

Applicants claims the following fee status:

- (●) Small Entity
- ( ) Micro Entity
- ( ) Regular Undiscounted

Applicants selects the following :

| | | |
|---|---|---|
| ( ) 3 1/2 | ( ) 7 1/2 | (●) 11 1/2 |

PETITION FEE
The petition fee required by 37 CFR 1.17(m) (Fee Code 1558/2558) must be paid as a condition of accepting unintentionally delayed payment of the maintenance fee.

MAINTENANCE FEE (37 CFR 1.20(e)-(g))
The appropriate maintenance fee must be submitted with this petition.

**STATEMENT**

The delay in payment of the maintenance fee for this patent was unintentional.

Petitioner is reminded that a delay resulting from a deliberately chosen course of action or a change in circumstance is not an unintentional delay.

Petitioner is further reminded that a person seeking reinstatement of an expired patent should not make a statement that the delay in payment of the maintenance fee was unintentional unless the entire delay was unintentional, including the period from discovery that the maintenance fee was not timely paid until payment of the maintenance fee. For example, a statement that the delay in payment of the maintenance fee was unintentional would not be proper when the patentee becomes aware of an unintentional failure to timely pay the maintenance fee and then intentionally delays filing a petition for reinstatement of the patent under 37 CFR 1.378. See MPEP 2590.

**NOTE**: Where the petition under 37 CFR 1.378 is filed more than two years after the date the patent expired for nonpayment of the maintenance fee, the United States Patent and Trademark Office requires an additional explanation of the circumstances surrounding the delay that establishes the entire delay was unintentional. This requirement is in addition to the requirement to provide a statement that the entire delay was unintentional. See *Clarification of the Practice for Requiring Additional Information in Petitions Filed in Patent Applications and Patents Based on Unintentional Delay*, 85 FR 12222 (March 2, 2020). See MPEP 711.03(c)(II)(C)-(F) for additional guidance on the information required to establish that the entire delay was unintentional.

PETITIONER(S) REQUEST THAT THE DELAYED PAYMENT OF THE MAINTENANCE FEE BE ACCEPTED AND THE PATENT REINSTATED

THIS PORTION MUST BE COMPLETED BY THE SIGNATORY OR SIGNATORIES

37 CFR 1.378(c) states: "Any petition under this section must be signed in compliance with 37 CFR 1.33(b) ."

I certify, in accordance with 37 CFR 1.4(d)(4) that I am

- ○ An attorney or agent registered to practice before the Patent and Trademark Office who has been given power of attorney in this application.
- ○ An attorney or agent registered to practice before the Patent and Trademark Office
- ○ A sole patentee
- ○ A joint patentee; I certify that I am authorized to sign this submission on behalf of all the other patentees as evidenced by the power of attorney in the application
- ○ A joint patentee; all of whom are signing this e-petition
- ◉ The assignee of record of the entire interest that qualifies as an authorized party under 37 CFR 1.33(b)

The Assignee of record of the entire interest

Under 37 CFR 3.71 an assignee becomes of record by filing a statement in compliance with 37 CFR 3.73(b).
Signature requirements are set forth in 37 CFR 1.4(d), and the undersigned certifies that he / she is empowered to act on behalf of the assignee of the entire interest

| | |
|---|---|
| Signature | /Dina Lozofsky/ |
| Name | Dina Lozofsky |

Enter Reel and Frame Number [Remove]

| | | | |
|---|---|---|---|
| Reel Number | 018494 | Frame Number | 0141 |

Click ADD for additional Reel Number and Frame Number [Add]

# Electronic Patent Application Fee Transmittal

| | |
|---|---|
| **Application Number:** | 11504981 |
| **Filing Date:** | 15-Aug-2006 |
| **Title of Invention:** | GLASS-MODIFIED STRESS WAVES FOR SEPARATION OF ULTRA THIN FILMS AND NANOELECTRONICS DEVICE FABRICATION |
| **First Named Inventor/Applicant Name:** | Vijay Gupta |
| **Filer:** | Dina Lozofsky |
| **Attorney Docket Number:** | UC03-126-2US |

Filed as Small Entity

**Filing Fees for Utility under 35 USC 111(a)**

| Description | Fee Code | Quantity | Amount | Sub-Total in USD($) |
|---|---|---|---|---|
| **Basic Filing:** | | | | |
| MAINTENANCE FEE DUE AT 11.5 YEARS | 2553 | 1 | 3850 | 3850 |
| PET. DELAY PYMT MAINTAIN PATENT IN FORCE | 2558 | 1 | 1050 | 1050 |
| **Pages:** | | | | |
| **Claims:** | | | | |
| **Miscellaneous-Filing:** | | | | |
| **Petition:** | | | | |
| **Patent-Appeals-and-Interference:** | | | | |

| Description | Fee Code | Quantity | Amount | Sub-Total in USD($) |
|---|---|---|---|---|
| Post-Allowance-and-Post-Issuance: | | | | |
| Extension-of-Time: | | | | |
| Miscellaneous: | | | | |
| | | | Total in USD ($) | 4900 |

# UNITED STATES PATENT AND TRADEMARK OFFICE

Commissioner for Patents
United States Patent and Trademark Office
P.O. Box 1450
Alexandria, VA 22313-1450
www.uspto.gov

In re Patent No. 7487684
Issue Date: February 10,2009
Application No. 11504981
Filed: August 15,2006
Attorney Docket No. UC03-126-2US

:DECISION GRANTING PETITION
:UNDER 37 CFR 1.378(b)

This is a decision on the electronic petition, filed April 20,2021 ,under 37 CFR 1.378(b) to accept the unintentionally delayed payment of the 11.5 year maintenance fee for the above-identified patent.

The petition is **GRANTED**.

The maintenance fee is accepted, and the above-identified patent reinstated as of April 20,2021 . This decision also constitutes notice that the fee has been accepted. An electronic copy of the petition and this decision has been created as an entry in the Image File Wrapper. Nevertheless, petitioner should print and retain an independent copy.

Telephone inquiries related to this electronic decision should be directed to the Electronic Business Center at 1-866-217-9197.

# Electronic Acknowledgement Receipt

| | |
|---|---|
| **EFS ID:** | 42503913 |
| **Application Number:** | 11504981 |
| **Patent Number:** | 7487684 |
| **Confirmation Number:** | 4584 |
| **Petition Issued Date:** | April 20,2021 |
| **Title of Invention:** | GLASS-MODIFIED STRESS WAVES FOR SEPARATION OF ULTRA THIN FILMS AND NANOELECTRONICS DEVICE FABRICATION |
| **First Named Inventor/Applicant Name:** | Vijay Gupta |
| **Customer Number:** | 8156 |
| **Filer:** | Dina Lozofsky |
| **Filer Authorized By:** | |
| **Attorney Docket Number:** | UC03-126-2US |
| **Receipt Date:** | 20-APR-2021 |
| **Filing Date:** | 15-AUG-2006 |
| **Time Stamp:** | 17:33:55 |
| **Application Type:** | Utility under 35 USC 111(a) |

## Payment information:

| | |
|---|---|
| Submitted with Payment | yes |
| Payment Type | CARD |
| Payment was successfully received in RAM | $4900 |
| RAM confirmation Number | E20214JH36164513 |
| Deposit Account | |
| Authorized User | |
| The Director of the USPTO is hereby authorized to charge indicated fees and credit any overpayment as follows: | |

## File Listing:

| Document Number | Document Description | File Name | File Size(Bytes)/ Message Digest | Multi Part /.zip | Pages (if appl.) |
|---|---|---|---|---|---|
| 1 | Petition automatically granted by EFS | petition-request.pdf | 39921<br>0ea0b897a5ebd389907258e557cb8ec47b0 77c46 | no | 2 |
| **Warnings:** | | | | | |
| **Information:** | | | | | |
| 2 | Fee Worksheet (SB06) | fee-info.pdf | 32359<br>d7d27e23bacc60ba7987338faped1ae290ad fba08 | no | 2 |
| **Warnings:** | | | | | |
| **Information:** | | | | | |
| | | **Total Files Size (in bytes):** | 72280 | | |

**This Acknowledgement Receipt evidences receipt on the noted date by the USPTO of the indicated documents, characterized by the applicant, and including page counts, where applicable. It serves as evidence of receipt similar to a Post Card, as described in MPEP 503.**

**New Applications Under 35 U.S.C. 111**
**If a new application is being filed and the application includes the necessary components for a filing date (see 37 CFR 1.53(b)-(d) and MPEP 506), a Filing Receipt (37 CFR 1.54) will be issued in due course and the date shown on this Acknowledgement Receipt will establish the filing date of the application.**
**National Stage of an International Application under 35 U.S.C. 371**
**If a timely submission to enter the national stage of an international application is compliant with the conditions of 35 U.S.C. 371 and other applicable requirements a Form PCT/DO/EO/903 indicating acceptance of the application as a national stage submission under 35 U.S.C. 371 will be issued in addition to the Filing Receipt, in due course.**
**New International Application Filed with the USPTO as a Receiving Office**
**If a new international application is being filed and the international application includes the necessary components for an international filing date (see PCT Article 11 and MPEP 1810), a Notification of the International Application Number and of the International Filing Date (Form PCT/RO/105) will be issued in due course, subject to prescriptions concerning national security, and the date shown on this Acknowledgement Receipt will establish the international filing date of the application.**

UNITED STATES PATENT AND TRADEMARK OFFICE

UNITED STATES DEPARTMENT OF COMMERCE
United States Patent and Trademark Office
Address: COMMISSIONER FOR PATENTS
P.O. Box 1450
Alexandria, Virginia 22313-1450
www.uspto.gov

| APPLICATION NUMBER | FILING OR 371(C) DATE | FIRST NAMED APPLICANT | ATTY.DOCKET NO./TITLE | REQUEST ID |
|---|---|---|---|---|
| 11/504,981 | 08/15/2006 | Vijay Gupta | UC03-126-2US | 137111 |

## Acknowledgement of Change to Small Entity Status

The entity status change request below filed through Private PAIR on 04/20/2021 has been accepted.

## CERTIFICATIONS:

**Change of Entity Status:**

X Applicant asserting small entity status. See 37 CFR 1.27.
NOTE: If the application was previously under micro entity status, checking this box will be taken to be a notification of loss of entitlement to micro entity status.

**This portion must be completed by the signatory or signatories making the entity status change in accordance with 37 CFR 1.4(d)(4).**

| | |
|---|---|
| **Signature:** | /John P. O'Banion/ |
| **Name:** | John P. O'Banion |
| **Registration Number:** | 33201 |

UNITED STATES PATENT AND TRADEMARK OFFICE

UNITED STATES DEPARTMENT OF COMMERCE
United States Patent and Trademark Office
Address: COMMISSIONER FOR PATENTS
P.O. Box 1450
Alexandria, Virginia 22313-1450
www.uspto.gov

| APPLICATION NO. | ISSUE DATE | PATENT NO. | ATTORNEY DOCKET NO. | CONFIRMATION NO. |
|---|---|---|---|---|
| 11/504,981 | 02/10/2009 | 7487684 | UC03-126-2US | 4584 |

8156 7590 01/21/2009
JOHN P. O'BANION
O'BANION & RITCHEY LLP
400 CAPITOL MALL SUITE 1550
SACRAMENTO, CA 95814

# ISSUE NOTIFICATION

The projected patent number and issue date are specified above.

**Determination of Patent Term Adjustment under 35 U.S.C. 154 (b)**
(application filed on or after May 29, 2000)

The Patent Term Adjustment is 40 day(s). Any patent to issue from the above-identified application will include an indication of the adjustment on the front page.

If a Continued Prosecution Application (CPA) was filed in the above-identified application, the filing date that determines Patent Term Adjustment is the filing date of the most recent CPA.

Applicant will be able to obtain more detailed information by accessing the Patent Application Information Retrieval (PAIR) WEB site (http://pair.uspto.gov).

Any questions regarding the Patent Term Extension or Adjustment determination should be directed to the Office of Patent Legal Administration at (571)-272-7702. Questions relating to issue and publication fee payments should be directed to the Customer Service Center of the Office of Patent Publication at (571)-272-4200.

APPLICANT(s) (Please see PAIR WEB site http://pair.uspto.gov for additional applicants):

Vijay Gupta, Sherman Oaks, CA;
Vassili A. Kireev, Sunnnyvale, CA;

UNITED STATES PATENT AND TRADEMARK OFFICE

UNITED STATES DEPARTMENT OF COMMERCE
United States Patent and Trademark Office
Address: COMMISSIONER FOR PATENTS
P.O. Box 1450
Alexandria, Virginia 22313-1450
www.uspto.gov

Bib Data Sheet

**CONFIRMATION NO. 4584**

| SERIAL NUMBER | FILING OR 371(c) DATE | CLASS | GROUP ART UNIT | ATTORNEY DOCKET NO. |
|---|---|---|---|---|
| 11/504,981 | 08/15/2006<br>RULE | 073 | 2855 | UC03-126-2US |

**APPLICANTS**

Vijay Gupta, Sherman Oaks, CA;
Vassili A. Kireev, Sunnyvale, CA;

**** CONTINUING DATA ****************************

This application is a CON of PCT/US05/07304 03/07/2005 which claims benefit of 60/550,803 03/05/2004

**** FOREIGN APPLICATIONS **********************

**IF REQUIRED, FOREIGN FILING LICENSE GRANTED**
** 08/30/2006

| | | STATE OR COUNTRY | SHEETS DRAWING | TOTAL CLAIMS | INDEPENDENT CLAIMS |
|---|---|---|---|---|---|
| Foreign Priority claimed<br>35 USC 119 (a-d) conditions met<br>Verified and Acknowledged | ☐ yes ☐ no<br>☐ yes ☐ no ☐ Met after Allowance<br>Examiner's Signature Initials | CA | 12 | 37 | 4 |

**ADDRESS**
8156

**TITLE**
GLASS-MODIFIED STRESS WAVES FOR SEPARATION OF ULTRA THIN FILMS AND NANOELECTRONICS DEVICE FABRICATION

| FILING FEE RECEIVED | | |
|---|---|---|
| 1390 | FEES: Authority has been given in Paper No. _____ to charge/credit DEPOSIT ACCOUNT No. _____ for following: | ☐ All Fees<br>☐ 1.16 Fees ( Filing )<br>☐ 1.17 Fees ( Processing Ext. of time )<br>☐ 1.18 Fees ( Issue )<br>☐ Other _____<br>☐ Credit |

# PART B - FEE(S) TRANSMITTAL

**Complete and send this form, together with applicable fee(s), to: Mail** **Mail Stop ISSUE FEE**
**Commissioner for Patents**
**P.O. Box 1450**
**Alexandria, Virginia 22313-1450**
**or Fax (571)-273-2885**

INSTRUCTIONS: This form should be used for transmitting the ISSUE FEE and PUBLICATION FEE (if required). Blocks 1 through 5 should be completed where appropriate. All further correspondence including the Patent, advance orders and notification of maintenance fees will be mailed to the current correspondence address as indicated unless corrected below or directed otherwise in Block 1, by (a) specifying a new correspondence address; and/or (b) indicating a separate "FEE ADDRESS" for maintenance fee notifications.

CURRENT CORRESPONDENCE ADDRESS (Note: Use Block 1 for any change of address)

8156 7590 09/29/2008

JOHN P. O'BANION
O'BANION & RITCHEY LLP
400 CAPITOL MALL SUITE 1550
SACRAMENTO, CA 95814

OIPE JAN 02 2009 PATENT & TRADEMARK OFFICE

Note: A certificate of mailing can only be used for domestic mailings of the Fee(s) Transmittal. This certificate cannot be used for any other accompanying papers. Each additional paper, such as an assignment or formal drawing, must have its own certificate of mailing or transmission.

**Certificate of Mailing or Transmission**
I hereby certify that this Fee(s) Transmittal is being deposited with the United States Postal Service with sufficient postage for first class mail in an envelope addressed to the Mail Stop ISSUE FEE address above, or being facsimile transmitted to the USPTO (571) 273-2885, on the date indicated below.

John P. O'Banion (Depositor's name)
(Signature)
12/29/08 (Date)

| APPLICATION NO. | FILING DATE | FIRST NAMED INVENTOR | ATTORNEY DOCKET NO. | CONFIRMATION NO. |
|---|---|---|---|---|
| 11/504,981 | 08/15/2006 | Vijay Gupta | UC03-126-2US | 4584 |

TITLE OF INVENTION: GLASS-MODIFIED STRESS WAVES FOR SEPARATION OF ULTRA THIN FILMS AND NANOELECTRONICS DEVICE FABRICATION

| APPLN. TYPE | SMALL ENTITY | ISSUE FEE DUE | PUBLICATION FEE DUE | PREV. PAID ISSUE FEE | TOTAL FEE(S) DUE | DATE DUE |
|---|---|---|---|---|---|---|
| nonprovisional | ~~YES~~ NO | ~~$720~~ 1510 | $300 | $0 | ~~$1020~~ 1810 | 12/29/2008 |

| EXAMINER | ART UNIT | CLASS-SUBCLASS |
|---|---|---|
| DAVIS, OCTAVIA L | 2855 | 073-800000 |

01/02/2009 SDENBOB4 00000048 11504981
01 FC:1501 1510.00 OP
02 FC:1504 300.00 OP

1. Change of correspondence address or indication of "Fee Address" (37 CFR 1.363).
☐ Change of correspondence address (or Change of Correspondence Address form PTO/SB/122) attached.
☐ "Fee Address" indication (or "Fee Address" Indication form PTO/SB/47; Rev 03-02 or more recent) attached. **Use of a Customer Number is required.**

2. For printing on the patent front page, list
(1) the names of up to 3 registered patent attorneys or agents OR, alternatively,
(2) the name of a single firm (having as a member a registered attorney or agent) and the names of up to 2 registered patent attorneys or agents. If no name is listed, no name will be printed.
1 John P. O'Banion
2
3

3. ASSIGNEE NAME AND RESIDENCE DATA TO BE PRINTED ON THE PATENT (print or type)
PLEASE NOTE: Unless an assignee is identified below, no assignee data will appear on the patent. If an assignee is identified below, the document has been filed for recordation as set forth in 37 CFR 3.11. Completion of this form is NOT a substitute for filing an assignment.

(A) NAME OF ASSIGNEE (B) RESIDENCE: (CITY and STATE OR COUNTRY)

THE REGENTS OF THE UNIVERSITY OF CALIFORNIA OAKLAND, CALIFORNIA

Please check the appropriate assignee category or categories (will not be printed on the patent): ☐ Individual ☒ Corporation or other private group entity ☐ Government

4a. The following fee(s) are submitted:
☒ Issue Fee
☒ Publication Fee (No small entity discount permitted)
☐ Advance Order - # of Copies _____

4b. Payment of Fee(s): **(Please first reapply any previously paid issue fee shown above)**
☒ A check is enclosed.
☐ Payment by credit card. Form PTO-2038 is attached.
☐ The Director is hereby authorized to charge the required fee(s), any deficiency, or credit any overpayment, to Deposit Account Number _____ (enclose an extra copy of this form).

5. **Change in Entity Status** (from status indicated above)
☐ a. Applicant claims SMALL ENTITY status. See 37 CFR 1.27. ☒ b. Applicant is no longer claiming SMALL ENTITY status. See 37 CFR 1.27(g)(2).

NOTE: The Issue Fee and Publication Fee (if required) will not be accepted from anyone other than the applicant; a registered attorney or agent; or the assignee or other party in interest as shown by the records of the United States Patent and Trademark Office.

Authorized Signature _____ Date 12/29/08
Typed or printed name John P. O'Banion Registration No. 38201

This collection of information is required by 37 CFR 1.311. The information is required to obtain or retain a benefit by the public which is to file (and by the USPTO to process) an application. Confidentiality is governed by 35 U.S.C. 122 and 37 CFR 1.14. This collection is estimated to take 12 minutes to complete, including gathering, preparing, and submitting the completed application form to the USPTO. Time will vary depending upon the individual case. Any comments on the amount of time you require to complete this form and/or suggestions for reducing this burden, should be sent to the Chief Information Officer, U.S. Patent and Trademark Office, U.S. Department of Commerce, P.O. Box 1450, Alexandria, Virginia 22313-1450. DO NOT SEND FEES OR COMPLETED FORMS TO THIS ADDRESS. SEND TO: Commissioner for Patents, P.O. Box 1450, Alexandria, Virginia 22313-1450.
Under the Paperwork Reduction Act of 1995, no persons are required to respond to a collection of information unless it displays a valid OMB control number.

OIPE
JAN 02 2009
IAP18
PATENT & TRADEMARK OFFICE

# IN THE UNITED STATES PATENT AND TRADEMARK OFFICE

| | | | | |
|---|---|---|---|---|
| Appl. No. | : | 11/504,981 | Confirmation No.: | 4584 |
| Applicant | : | VIJAY GUPTA | | |
| Title | : | GLASS-MODIFIED STRESS WAVES FOR SEPARATION OF ULTRA THIN FILMS AND NANOELECTRONICS DEVICE FABRICATION | | |
| Filed | : | 08/15/2006 | | |
| TC/A.U. | : | 2855 | | |
| Examiner | : | DAVIS, OCTAVIA L. | | |
| Docket No. | : | CKS5042.24A | | |
| Cust. No. | : | 8156 | | |

**Mail Stop ISSUE FEE**
**Commissioner for Patents**
**P.O. Box 1450**
**Alexandria, VA 22313-1450**

Certificate of Mailing (37 CFR 1.8)

I hereby certify that this paper is being deposited with the United States Postal Service with sufficient postage for first class mail in an envelope addressed to "Commissioner for Patents, P.O. Box 1450, Alexandria, VA 22313-1450" on the dated indicated below.

John P. O'Banion
(name)

(signature)

12/29/08
(date)

## ISSUE FEE TRANSMITTAL LETTER
**(Large Entity)**

Dear Sir:

The following items are enclosed:

1. Part B - Fee(s) Transmittal (PTOL-85);
2. Check in the amount of $ 1810
   - X $1510 issue fee
   - X $ 300 publication fee

Please charge any fee deficiency to Deposit Account No. 07-1137.

Date: 12/29/08

Respectfully submitted,

John P. O'Banion, Reg. No. 33,201
O'BANION & RITCHEY LLP
400 Capitol Mall, Suite 1550
Sacramento, CA 95814
(916) 498-1010

UNITED STATES PATENT AND TRADEMARK OFFICE

UNITED STATES DEPARTMENT OF COMMERCE
United States Patent and Trademark Office
Address: COMMISSIONER FOR PATENTS
P.O. Box 1450
Alexandria, Virginia 22313-1450
www.uspto.gov

# NOTICE OF ALLOWANCE AND FEE(S) DUE

8156 7590 09/29/2008

JOHN P. O'BANION
O'BANION & RITCHEY LLP
400 CAPITOL MALL SUITE 1550
SACRAMENTO, CA 95814

| EXAMINER |
|---|
| DAVIS, OCTAVIA L |

| ART UNIT | PAPER NUMBER |
|---|---|
| 2855 | |

DATE MAILED: 09/29/2008

| APPLICATION NO. | FILING DATE | FIRST NAMED INVENTOR | ATTORNEY DOCKET NO. | CONFIRMATION NO. |
|---|---|---|---|---|
| 11/504,981 | 08/15/2006 | Vijay Gupta | UC03-126-2US | 4584 |

TITLE OF INVENTION: GLASS-MODIFIED STRESS WAVES FOR SEPARATION OF ULTRA THIN FILMS AND NANOELECTRONICS DEVICE FABRICATION

| APPLN. TYPE | SMALL ENTITY | ISSUE FEE DUE | PUBLICATION FEE DUE | PREV. PAID ISSUE FEE | TOTAL FEE(S) DUE | DATE DUE |
|---|---|---|---|---|---|---|
| nonprovisional | YES | $720 | $300 | $0 | $1020 | 12/29/2008 |

**THE APPLICATION IDENTIFIED ABOVE HAS BEEN EXAMINED AND IS ALLOWED FOR ISSUANCE AS A PATENT. PROSECUTION ON THE MERITS IS CLOSED. THIS NOTICE OF ALLOWANCE IS NOT A GRANT OF PATENT RIGHTS. THIS APPLICATION IS SUBJECT TO WITHDRAWAL FROM ISSUE AT THE INITIATIVE OF THE OFFICE OR UPON PETITION BY THE APPLICANT. SEE 37 CFR 1.313 AND MPEP 1308.**

**THE ISSUE FEE AND PUBLICATION FEE (IF REQUIRED) MUST BE PAID WITHIN THREE MONTHS FROM THE MAILING DATE OF THIS NOTICE OR THIS APPLICATION SHALL BE REGARDED AS ABANDONED. THIS STATUTORY PERIOD CANNOT BE EXTENDED. SEE 35 U.S.C. 151. THE ISSUE FEE DUE INDICATED ABOVE DOES NOT REFLECT A CREDIT FOR ANY PREVIOUSLY PAID ISSUE FEE IN THIS APPLICATION. IF AN ISSUE FEE HAS PREVIOUSLY BEEN PAID IN THIS APPLICATION (AS SHOWN ABOVE), THE RETURN OF PART B OF THIS FORM WILL BE CONSIDERED A REQUEST TO REAPPLY THE PREVIOUSLY PAID ISSUE FEE TOWARD THE ISSUE FEE NOW DUE.**

**HOW TO REPLY TO THIS NOTICE:**

I. Review the SMALL ENTITY status shown above.

If the SMALL ENTITY is shown as YES, verify your current SMALL ENTITY status:

A. If the status is the same, pay the TOTAL FEE(S) DUE shown above.

B. If the status above is to be removed, check box 5b on Part B - Fee(s) Transmittal and pay the PUBLICATION FEE (if required) and twice the amount of the ISSUE FEE shown above, or

If the SMALL ENTITY is shown as NO:

A. Pay TOTAL FEE(S) DUE shown above, or

B. If applicant claimed SMALL ENTITY status before, or is now claiming SMALL ENTITY status, check box 5a on Part B - Fee(s) Transmittal and pay the PUBLICATION FEE (if required) and 1/2 the ISSUE FEE shown above.

II. PART B - FEE(S) TRANSMITTAL, or its equivalent, must be completed and returned to the United States Patent and Trademark Office (USPTO) with your ISSUE FEE and PUBLICATION FEE (if required). If you are charging the fee(s) to your deposit account, section "4b" of Part B - Fee(s) Transmittal should be completed and an extra copy of the form should be submitted. If an equivalent of Part B is filed, a request to reapply a previously paid issue fee must be clearly made, and delays in processing may occur due to the difficulty in recognizing the paper as an equivalent of Part B.

III. All communications regarding this application must give the application number. Please direct all communications prior to issuance to Mail Stop ISSUE FEE unless advised to the contrary.

**IMPORTANT REMINDER: Utility patents issuing on applications filed on or after Dec. 12, 1980 may require payment of maintenance fees. It is patentee's responsibility to ensure timely payment of maintenance fees when due.**



PTOL-85 (Rev. 08/07) Approved for use through 08/31/2010.

Boeing Ex. 1002, p. 14 of 177
Boeing v. Regents Univ. Cal.

# PART B - FEE(S) TRANSMITTAL

**Complete and send this form, together with applicable fee(s), to: Mail** **Mail Stop ISSUE FEE**
**Commissioner for Patents**
**P.O. Box 1450**
**Alexandria, Virginia 22313-1450**
**or Fax (571)-273-2885**

INSTRUCTIONS: This form should be used for transmitting the ISSUE FEE and PUBLICATION FEE (if required). Blocks 1 through 5 should be completed where appropriate. All further correspondence including the Patent, advance orders and notification of maintenance fees will be mailed to the current correspondence address as indicated unless corrected below or directed otherwise in Block 1, by (a) specifying a new correspondence address; and/or (b) indicating a separate "FEE ADDRESS" for maintenance fee notifications.

CURRENT CORRESPONDENCE ADDRESS (Note: Use Block 1 for any change of address)

8156 7590 09/29/2008

JOHN P. O'BANION
O'BANION & RITCHEY LLP
400 CAPITOL MALL SUITE 1550
SACRAMENTO, CA 95814

Note: A certificate of mailing can only be used for domestic mailings of the Fee(s) Transmittal. This certificate cannot be used for any other accompanying papers. Each additional paper, such as an assignment or formal drawing, must have its own certificate of mailing or transmission.

**Certificate of Mailing or Transmission**

I hereby certify that this Fee(s) Transmittal is being deposited with the United States Postal Service with sufficient postage for first class mail in an envelope addressed to the Mail Stop ISSUE FEE address above, or being facsimile transmitted to the USPTO (571) 273-2885, on the date indicated below.

(Depositor's name)
(Signature)
(Date)

| APPLICATION NO. | FILING DATE | FIRST NAMED INVENTOR | ATTORNEY DOCKET NO. | CONFIRMATION NO. |
|---|---|---|---|---|
| 11/504,981 | 08/15/2006 | Vijay Gupta | UC03-126-2US | 4584 |

TITLE OF INVENTION: GLASS-MODIFIED STRESS WAVES FOR SEPARATION OF ULTRA THIN FILMS AND NANOELECTRONICS DEVICE FABRICATION

| APPLN. TYPE | SMALL ENTITY | ISSUE FEE DUE | PUBLICATION FEE DUE | PREV. PAID ISSUE FEE | TOTAL FEE(S) DUE | DATE DUE |
|---|---|---|---|---|---|---|
| nonprovisional | YES | $720 | $300 | $0 | $1020 | 12/29/2008 |

| EXAMINER | ART UNIT | CLASS-SUBCLASS |
|---|---|---|
| DAVIS, OCTAVIA L | 2855 | 073-800000 |

1. Change of correspondence address or indication of "Fee Address" (37 CFR 1.363).

☐ Change of correspondence address (or Change of Correspondence Address form PTO/SB/122) attached.

☐ "Fee Address" indication (or "Fee Address" Indication form PTO/SB/47; Rev 03-02 or more recent) attached. **Use of a Customer Number is required.**

2. For printing on the patent front page, list

(1) the names of up to 3 registered patent attorneys or agents OR, alternatively,

(2) the name of a single firm (having as a member a registered attorney or agent) and the names of up to 2 registered patent attorneys or agents. If no name is listed, no name will be printed.

1 _____
2 _____
3 _____

3. ASSIGNEE NAME AND RESIDENCE DATA TO BE PRINTED ON THE PATENT (print or type)

PLEASE NOTE: Unless an assignee is identified below, no assignee data will appear on the patent. If an assignee is identified below, the document has been filed for recordation as set forth in 37 CFR 3.11. Completion of this form is NOT a substitute for filing an assignment.

(A) NAME OF ASSIGNEE (B) RESIDENCE: (CITY and STATE OR COUNTRY)

Please check the appropriate assignee category or categories (will not be printed on the patent) : ☐ Individual ☐ Corporation or other private group entity ☐ Government

4a. The following fee(s) are submitted:

☐ Issue Fee
☐ Publication Fee (No small entity discount permitted)
☐ Advance Order - # of Copies _____

4b. Payment of Fee(s): **(Please first reapply any previously paid issue fee shown above)**

☐ A check is enclosed.
☐ Payment by credit card. Form PTO-2038 is attached.
☐ The Director is hereby authorized to charge the required fee(s), any deficiency, or credit any overpayment, to Deposit Account Number _____ (enclose an extra copy of this form).

5. **Change in Entity Status** (from status indicated above)

☐ a. Applicant claims SMALL ENTITY status. See 37 CFR 1.27. ☐ b. Applicant is no longer claiming SMALL ENTITY status. See 37 CFR 1.27(g)(2).

NOTE: The Issue Fee and Publication Fee (if required) will not be accepted from anyone other than the applicant; a registered attorney or agent; or the assignee or other party in interest as shown by the records of the United States Patent and Trademark Office.

Authorized Signature _____ Date _____

Typed or printed name _____ Registration No. _____

This collection of information is required by 37 CFR 1.311. The information is required to obtain or retain a benefit by the public which is to file (and by the USPTO to process) an application. Confidentiality is governed by 35 U.S.C. 122 and 37 CFR 1.14. This collection is estimated to take 12 minutes to complete, including gathering, preparing, and submitting the completed application form to the USPTO. Time will vary depending upon the individual case. Any comments on the amount of time you require to complete this form and/or suggestions for reducing this burden, should be sent to the Chief Information Officer, U.S. Patent and Trademark Office, U.S. Department of Commerce, P.O. Box 1450, Alexandria, Virginia 22313-1450. DO NOT SEND FEES OR COMPLETED FORMS TO THIS ADDRESS. SEND TO: Commissioner for Patents, P.O. Box 1450, Alexandria, Virginia 22313-1450.

Under the Paperwork Reduction Act of 1995, no persons are required to respond to a collection of information unless it displays a valid OMB control number.



Boeing Ex. 1002, p. 15 of 177
Boeing v. Regents Univ. Cal.

UNITED STATES PATENT AND TRADEMARK OFFICE

UNITED STATES DEPARTMENT OF COMMERCE
United States Patent and Trademark Office
Address: COMMISSIONER FOR PATENTS
P.O. Box 1450
Alexandria, Virginia 22313-1450
www.uspto.gov

| APPLICATION NO. | FILING DATE | FIRST NAMED INVENTOR | ATTORNEY DOCKET NO. | CONFIRMATION NO. |
|---|---|---|---|---|
| 11/504,981 | 08/15/2006 | Vijay Gupta | UC03-126-2US | 4584 |

8156 7590 09/29/2008

JOHN P. O'BANION
O'BANION & RITCHEY LLP
400 CAPITOL MALL SUITE 1550
SACRAMENTO, CA 95814

| EXAMINER |
|---|
| DAVIS, OCTAVIA L |

| ART UNIT | PAPER NUMBER |
|---|---|
| 2855 | |

DATE MAILED: 09/29/2008

**Determination of Patent Term Adjustment under 35 U.S.C. 154 (b)**
(application filed on or after May 29, 2000)

The Patent Term Adjustment to date is 44 day(s). If the issue fee is paid on the date that is three months after the mailing date of this notice and the patent issues on the Tuesday before the date that is 28 weeks (six and a half months) after the mailing date of this notice, the Patent Term Adjustment will be 44 day(s).

If a Continued Prosecution Application (CPA) was filed in the above-identified application, the filing date that determines Patent Term Adjustment is the filing date of the most recent CPA.

Applicant will be able to obtain more detailed information by accessing the Patent Application Information Retrieval (PAIR) WEB site (http://pair.uspto.gov).

Any questions regarding the Patent Term Extension or Adjustment determination should be directed to the Office of Patent Legal Administration at (571)-272-7702. Questions relating to issue and publication fee payments should be directed to the Customer Service Center of the Office of Patent Publication at 1-(888)-786-0101 or (571)-272-4200.



PTOL-85 (Rev. 08/07) Approved for use through 08/31/2010.

Boeing Ex. 1002, p. 16 of 177
Boeing v. Regents Univ. Cal.

| Notice of Allowability | Application No. | Applicant(s) |
|---|---|---|
| | 11/504,981 | GUPTA ET AL. |
| | Examiner | Art Unit |
| | OCTAVIA DAVIS | 2855 |

***-- The MAILING DATE of this communication appears on the cover sheet with the correspondence address--***

All claims being allowable, PROSECUTION ON THE MERITS IS (OR REMAINS) CLOSED in this application. If not included herewith (or previously mailed), a Notice of Allowance (PTOL-85) or other appropriate communication will be mailed in due course. **THIS NOTICE OF ALLOWABILITY IS NOT A GRANT OF PATENT RIGHTS.** This application is subject to withdrawal from issue at the initiative of the Office or upon petition by the applicant. See 37 CFR 1.313 and MPEP 1308.

1. ☒ This communication is responsive to *applicant's amendment filed 8/22/08*.

2. ☒ The allowed claim(s) is/are *1-32 and 34-37*.

3. ☐ Acknowledgment is made of a claim for foreign priority under 35 U.S.C. § 119(a)-(d) or (f).
   a) ☐ All b) ☐ Some* c) ☐ None of the:
      1. ☐ Certified copies of the priority documents have been received.
      2. ☐ Certified copies of the priority documents have been received in Application No. _____ .
      3. ☐ Copies of the certified copies of the priority documents have been received in this national stage application from the International Bureau (PCT Rule 17.2(a)).

   * Certified copies not received: _____.

Applicant has THREE MONTHS FROM THE "MAILING DATE" of this communication to file a reply complying with the requirements noted below. Failure to timely comply will result in ABANDONMENT of this application.
**THIS THREE-MONTH PERIOD IS NOT EXTENDABLE.**

4. ☐ A SUBSTITUTE OATH OR DECLARATION must be submitted. Note the attached EXAMINER'S AMENDMENT or NOTICE OF INFORMAL PATENT APPLICATION (PTO-152) which gives reason(s) why the oath or declaration is deficient.

5. ☐ CORRECTED DRAWINGS ( as "replacement sheets") must be submitted.
   (a) ☐ including changes required by the Notice of Draftsperson's Patent Drawing Review ( PTO-948) attached
      1) ☐ hereto or 2) ☐ to Paper No./Mail Date _____.
   (b) ☐ including changes required by the attached Examiner's Amendment / Comment or in the Office action of Paper No./Mail Date _____.

   **Identifying indicia such as the application number (see 37 CFR 1.84(c)) should be written on the drawings in the front (not the back) of each sheet. Replacement sheet(s) should be labeled as such in the header according to 37 CFR 1.121(d).**

6. ☐ DEPOSIT OF and/or INFORMATION about the deposit of BIOLOGICAL MATERIAL must be submitted. Note the attached Examiner's comment regarding REQUIREMENT FOR THE DEPOSIT OF BIOLOGICAL MATERIAL.

**Attachment(s)**

1. ☒ Notice of References Cited (PTO-892)
2. ☐ Notice of Draftperson's Patent Drawing Review (PTO-948)
3. ☐ Information Disclosure Statements (PTO/SB/08), Paper No./Mail Date _____
4. ☐ Examiner's Comment Regarding Requirement for Deposit of Biological Material
5. ☐ Notice of Informal Patent Application
6. ☐ Interview Summary (PTO-413), Paper No./Mail Date _____ .
7. ☐ Examiner's Amendment/Comment
8. ☒ Examiner's Statement of Reasons for Allowance
9. ☐ Other _____.



Boeing Ex. 1002, p. 17 of 177
Boeing v. Regents Univ. Cal.

## DETAILED ACTION

### *Allowable Subject Matter*

1. Claims 1 – 32 and 34 - 37 are allowed.

2. The following is an examiner's statement of reasons for allowance: The primary reasons for allowance is that there cannot be ascertained prior art that anticipates or makes obvious the provisions of *the glass element is configured to propagate and modify the stress wave* in combination with the other limitations presented in claims 1, 13, 25 and 32.

Any comments considered necessary by applicant must be submitted no later than the payment of the issue fee and, to avoid processing delays, should preferably accompany the issue fee. Such submissions should be clearly labeled "Comments on Statement of Reasons for Allowance."

### *Conclusion*

3. The prior art made of record and not relied upon is considered pertinent to applicant's disclosure.

Chiang (4,722,600) disclose an apparatus and method for measuring strain.

Jaing et al (6,466,308) disclose a method for measuring a thermal expansion coefficient of a thin film by using phase shifting interferometry.

9. Any inquiry concerning this communication or earlier communications from the examiner should be directed to Octavia Davis whose telephone number is 571-272-2176. The examiner can normally be reached on Mon through Thurs from 9 to 6. The examiner can also be reached on

alternate Fridays.

If attempts to reach the examiner by telephone are unsuccessful, the examiner's supervisor, Edward Lefkowitz, can be reached on 571-272-2180. The fax phone number for the organization where this application or proceeding is assigned is 571-273-8300.

Information regarding the status of an application may be obtained from the Patent Application Information Retrieval (PAIR) system. Status information for published applications may be obtained from either Private PAIR or Public PAIR. Status information for unpublished applications is available through Private PAIR only. For more information about the PAIR system, see http://pair-direct.uspto.gov. Should you have questions on access to the Private PAIR system, contact the Electronic Business Center (EBC) at 866-217-9197 (toll-free).

/Edward Lefkowitz/

Supervisory Patent Examiner, Art Unit 2855

OD/2855

9/22/08

| Notice of References Cited | Application/Control No. 11/504,981 | Applicant(s)/Patent Under Reexamination GUPTA ET AL. | |
|---|---|---|---|
| | Examiner OCTAVIA DAVIS | Art Unit 2855 | Page 1 of 1 |

**U.S. PATENT DOCUMENTS**

| * | | Document Number Country Code-Number-Kind Code | Date MM-YYYY | Name | Classification |
|---|---|---|---|---|---|
| * | A | US-6,466,308 | 10-2002 | Jaing et al. | 356/35.5 |
| * | B | US-4,722,600 | 02-1988 | Chiang, Fu-Pen | 356/32 |
| | C | US- | | | |
| | D | US- | | | |
| | E | US- | | | |
| | F | US- | | | |
| | G | US- | | | |
| | H | US- | | | |
| | I | US- | | | |
| | J | US- | | | |
| | K | US- | | | |
| | L | US- | | | |
| | M | US- | | | |

**FOREIGN PATENT DOCUMENTS**

| * | | Document Number Country Code-Number-Kind Code | Date MM-YYYY | Country | Name | Classification |
|---|---|---|---|---|---|---|
| | N | | | | | |
| | O | | | | | |
| | P | | | | | |
| | Q | | | | | |
| | R | | | | | |
| | S | | | | | |
| | T | | | | | |

**NON-PATENT DOCUMENTS**

| * | | Include as applicable: Author, Title Date, Publisher, Edition or Volume, Pertinent Pages) |
|---|---|---|
| | U | |
| | V | |
| | W | |
| | X | |

*A copy of this reference is not being furnished with this Office action. (See MPEP § 707.05(a).)
Dates in MM-YYYY format are publication dates. Classifications may be US or foreign.

| Index of Claims | Application/Control No. | Applicant(s)/Patent Under Reexamination |
|---|---|---|
| | 11504981 | GUPTA ET AL. |
| | **Examiner** | **Art Unit** |
| | Davis, Octavia | 2855 |

| | | | | | | | |
|---|---|---|---|---|---|---|---|
| ✓ | Rejected | - | Cancelled | N | Non-Elected | A | Appeal |
| = | Allowed | ÷ | Restricted | I | Interference | O | Objected |

☐ Claims renumbered in the same order as presented by applicant ☐ CPA ☐ T.D. ☐ R.1.47

| CLAIM | | DATE | | | | | | | | |
|---|---|---|---|---|---|---|---|---|---|---|
| Final | Original | 11/24/2007 | | | | | | | | |
| 1 | 1 | = | | | | | | | | |
| 2 | 2 | = | | | | | | | | |
| 3 | 3 | = | | | | | | | | |
| 4 | 4 | = | | | | | | | | |
| 5 | 5 | = | | | | | | | | |
| 6 | 6 | = | | | | | | | | |
| 7 | 7 | = | | | | | | | | |
| 8 | 8 | = | | | | | | | | |
| 9 | 9 | = | | | | | | | | |
| 10 | 10 | = | | | | | | | | |
| 11 | 11 | = | | | | | | | | |
| 12 | 12 | = | | | | | | | | |
| 13 | 13 | = | | | | | | | | |
| 14 | 14 | = | | | | | | | | |
| 15 | 15 | = | | | | | | | | |
| 16 | 16 | = | | | | | | | | |
| 17 | 17 | = | | | | | | | | |
| 18 | 18 | = | | | | | | | | |
| 19 | 19 | = | | | | | | | | |
| 20 | 20 | = | | | | | | | | |
| 21 | 21 | = | | | | | | | | |
| 22 | 22 | = | | | | | | | | |
| 23 | 23 | = | | | | | | | | |
| 24 | 24 | = | | | | | | | | |
| 25 | 25 | = | | | | | | | | |
| 26 | 26 | = | | | | | | | | |
| 27 | 27 | = | | | | | | | | |
| 28 | 28 | = | | | | | | | | |
| 29 | 29 | = | | | | | | | | |
| 30 | 30 | = | | | | | | | | |
| 31 | 31 | = | | | | | | | | |
| 32 | 32 | = | | | | | | | | |
| | 33 | - | | | | | | | | |
| 33 | 34 | = | | | | | | | | |
| 34 | 35 | = | | | | | | | | |
| 35 | 36 | = | | | | | | | | |

| Index of Claims | Application/Control No. | Applicant(s)/Patent Under Reexamination |
|---|---|---|
| | 11504981 | GUPTA ET AL. |
| | **Examiner** | **Art Unit** |
| | Davis, Octavia | 2855 |

| | | | | | | | |
|---|---|---|---|---|---|---|---|
| ✓ | Rejected | - | Cancelled | N | Non-Elected | A | Appeal |
| = | Allowed | ÷ | Restricted | I | Interference | O | Objected |

☐ Claims renumbered in the same order as presented by applicant ☐ CPA ☐ T.D. ☐ R.1.47

| CLAIM | | DATE | | | | | | | | |
|---|---|---|---|---|---|---|---|---|---|---|
| Final | Original | 11/24/2007 | | | | | | | | |
| 36 | 37 | = | | | | | | | | |

EAST Search History

| Ref # | Hits | Search Query | DBs | Default Operator | Plurals | Time Stamp |
|---|---|---|---|---|---|---|
| L1 | 610 | (tensile tension) near3 (substrate wafer ) near3 (coat $4 nanostructure platform ) | US-PGPUB; USPAT; USOCR; FPRS; EPO; JPO; DERWENT; IBM_TDB | OR | ON | 2008/09/18 20:21 |
| L2 | 371 | 1 and (glass ) | US-PGPUB; USPAT; USOCR; FPRS; EPO; JPO; DERWENT; IBM_TDB | OR | ON | 2008/09/18 20:21 |
| L3 | 388 | 1 and (glass pyrex "soda lime" quartz borosilicate ) | US-PGPUB; USPAT; USOCR; FPRS; EPO; JPO; DERWENT; IBM_TDB | OR | ON | 2008/09/18 20:21 |
| L4 | 3 | 3 and (stress strain ) near3 (wave $4 pulse ) | US-PGPUB; USPAT; USOCR; FPRS; EPO; JPO; DERWENT; IBM_TDB | OR | ON | 2008/09/18 20:22 |
| L5 | 153 | 3 and (stress strain ) | US-PGPUB; USPAT; USOCR; FPRS; EPO; JPO; DERWENT; IBM_TDB | OR | ON | 2008/09/18 20:22 |
| L6 | 41 | 5 and (wave$4 pulse ) | US-PGPUB; USPAT; USOCR; FPRS; EPO; JPO; DERWENT; IBM_TDB | OR | ON | 2008/09/18 20:22 |
| L7 | 12 | 6 and (laser ) near3 (beam pulse source ) | US-PGPUB; USPAT; USOCR; FPRS; EPO; JPO; DERWENT; IBM_TDB | OR | ON | 2008/09/18 20:22 |

| | | | | | | |
|---|---|---|---|---|---|---|
| L8 | 18 | 6 and (laser ) | US-PGPUB; USPAT; USOCR; FPRS; EPO; JPO; DERWENT; IBM_TDB | OR | ON | 2008/09/18 20:23 |
| L9 | 6 | (glass pyrex "soda lime" quartz borosilicate ) near3 (modif$4 chang$4 varying vary varies updat$4 decreas$4 increas$4 ) near3 (stress strain ) near3 (wave$4 puls $4) | US-PGPUB; USPAT; USOCR; FPRS; EPO; JPO; DERWENT; IBM_TDB | OR | ON | 2008/09/18 20:25 |
| L10 | 46 | (glass pyrex "soda lime" quartz borosilicate ) near3 (stress strain ) near3 (wave$4 puls $4) | US-PGPUB; USPAT; USOCR; FPRS; EPO; JPO; DERWENT; IBM_TDB | OR | ON | 2008/09/18 20:26 |
| L11 | 7 | 10 and (tensile tension) | US-PGPUB; USPAT; USOCR; FPRS; EPO; JPO; DERWENT; IBM_TDB | OR | ON | 2008/09/18 20:27 |

9/ 18/ 08 8:28:10 PM

UNITED STATES PATENT AND TRADEMARK OFFICE

UNITED STATES DEPARTMENT OF COMMERCE
United States Patent and Trademark Office
Address: COMMISSIONER FOR PATENTS
P.O. Box 1450
Alexandria, Virginia 22313-1450
www.uspto.gov

# BIB DATA SHEET

**CONFIRMATION NO. 4584**

| SERIAL NUMBER | FILING or 371(c) DATE | CLASS | GROUP ART UNIT | ATTORNEY DOCKET NO. |
|---|---|---|---|---|
| 11/504,981 | 08/15/2006<br>**RULE** | 073 | 2855 | UC03-126-2US |

**APPLICANTS**

Vijay Gupta, Sherman Oaks, CA;
Vassili A. Kireev, Sunnnyvale, CA;

**** CONTINUING DATA ****************************

This application is a CON of PCT/US05/07304 03/07/2005
which claims benefit of 60/550,803 03/05/2004

**** FOREIGN APPLICATIONS ****************************

**** IF REQUIRED, FOREIGN FILING LICENSE GRANTED **** ** SMALL ENTITY **
08/30/2006

| Foreign Priority claimed | 35 USC 119(a-d) conditions met | Verified and Acknowledged | STATE OR COUNTRY | SHEETS DRAWINGS | TOTAL CLAIMS | INDEPENDENT CLAIMS |
|---|---|---|---|---|---|---|
| ☐ Yes ☑ No | ☐ Yes ☑ No | /OCTAVIA L DAVIS/ Examiner's Signature<br>☐ Met after Allowance<br>Initials | CA | 12 | 37 | 4 |

**ADDRESS**

JOHN P. O'BANION
O'BANION & RITCHEY LLP
400 CAPITOL MALL SUITE 1550
SACRAMENTO, CA 95814
UNITED STATES

**TITLE**

Glass-modified stress waves for separation of ultra thin films and nanoelectronics device fabrication

| FILING FEE RECEIVED | | |
|---|---|---|
| 1090 | FEES: Authority has been given in Paper No._____ to charge/credit DEPOSIT ACCOUNT No._____ for following: | ☐ All Fees<br>☐ 1.16 Fees (Filing)<br>☐ 1.17 Fees (Processing Ext. of time)<br>☐ 1.18 Fees (Issue)<br>☐ Other _____<br>☐ Credit |

EAST Search History

| Ref # | Hits | Search Query | DBs | Default Operator | Plurals | Time Stamp |
|---|---|---|---|---|---|---|
| L1 | 19 | "5438402" | US-PGPUB; USPAT; USOCR; FPRS; EPO; JPO; DERWENT; IBM_TDB | OR | ON | 2008/09/18 19:42 |
| L2 | 3 | 1 and (glass) near3 (modif$4 chang$4 ) | US-PGPUB; USPAT; USOCR; FPRS; EPO; JPO; DERWENT; IBM_TDB | OR | ON | 2008/09/18 19:47 |
| L3 | 3 | 1 and (modif$4 chang $4 ) near3 (wave$5) | US-PGPUB; USPAT; USOCR; FPRS; EPO; JPO; DERWENT; IBM_TDB | OR | ON | 2008/09/18 19:49 |
| L4 | 21 | ("4180324" \| "4280764" \| "4515867" \| "4571077" \| "4722600" \| "4939368" \| "5020904" \| "5026154").PN. OR ("5438402").URPN. | US-PGPUB; USPAT; USOCR | OR | ON | 2008/09/18 19:50 |
| L5 | 970 | 356/35.5;73/800.ccls. | US-PGPUB; USPAT; USOCR; FPRS; EPO; JPO; DERWENT; IBM_TDB | OR | ON | 2008/09/18 19:53 |
| L6 | 2 | 5 and (glass) near3 (modif$4 chang$4 ) near3 (wave$4 pulse ) | US-PGPUB; USPAT; USOCR; FPRS; EPO; JPO; DERWENT; IBM_TDB | OR | ON | 2008/09/18 19:53 |
| L7 | 64 | 5 and (constrain$4) | US-PGPUB; USPAT; USOCR; FPRS; EPO; JPO; DERWENT; IBM_TDB | OR | ON | 2008/09/18 19:57 |

| | | | | | | |
|---|---|---|---|---|---|---|
| L8 | 32 | 7 and (tensile tension ) | US-PGPUB; USPAT; USOCR; FPRS; EPO; JPO; DERWENT; IBM_TDB | OR | ON | 2008/09/18 19:57 |
| L9 | 19 | 8 and (glass) | US-PGPUB; USPAT; USOCR; FPRS; EPO; JPO; DERWENT; IBM_TDB | OR | ON | 2008/09/18 19:57 |
| L10 | 13 | 9 and (wave$4 pulse) | US-PGPUB; USPAT; USOCR; FPRS; EPO; JPO; DERWENT; IBM_TDB | OR | ON | 2008/09/18 19:58 |
| L11 | 284 | (tensile ) near3 (stress strain ) near3 (substrate) near3 (coat $4 silicon silicone nanostructure ) | US-PGPUB; USPAT; USOCR; FPRS; EPO; JPO; DERWENT; IBM_TDB | OR | ON | 2008/09/18 20:02 |
| L12 | 96 | 11 and (glass) | US-PGPUB; USPAT; USOCR; FPRS; EPO; JPO; DERWENT; IBM_TDB | OR | ON | 2008/09/18 20:02 |
| L13 | 32 | 12 and (laser ) | US-PGPUB; USPAT; USOCR; FPRS; EPO; JPO; DERWENT; IBM_TDB | OR | ON | 2008/09/18 20:03 |
| L14 | 85461 | (substrate) near3 (coat $4 silicon silicone nanostructure platform ).clm. | US-PGPUB; USPAT; USOCR; FPRS; EPO; JPO; DERWENT; IBM_TDB | OR | ON | 2008/09/18 20:08 |
| L15 | 489 | 14 and (tensile ) near3 (stress strain ).clm. | US-PGPUB; USPAT; USOCR; FPRS; EPO; JPO; DERWENT; IBM_TDB | OR | ON | 2008/09/18 20:09 |

| | | | | | | |
|---|---|---|---|---|---|---|
| L16 | 182 | 15 and (glass) | US-PGPUB; USPAT; USOCR; FPRS; EPO; JPO; DERWENT; IBM_TDB | OR | ON | 2008/09/18 20:09 |
| L17 | 46 | 16 and (laser ) | US-PGPUB; USPAT; USOCR; FPRS; EPO; JPO; DERWENT; IBM_TDB | OR | ON | 2008/09/18 20:09 |
| L18 | 258421 | glass near3 (substrate wafer ) | US-PGPUB; USPAT; USOCR; FPRS; EPO; JPO; DERWENT; IBM_TDB | OR | ON | 2008/09/18 20:13 |
| L19 | 31879 | 18 and (laser ) near3 (beam pulse) | US-PGPUB; USPAT; USOCR; FPRS; EPO; JPO; DERWENT; IBM_TDB | OR | ON | 2008/09/18 20:13 |
| L20 | 13 | 10 and (stress strain ) | US-PGPUB; USPAT; USOCR; FPRS; EPO; JPO; DERWENT; IBM_TDB | OR | ON | 2008/09/18 20:13 |
| L21 | 16155 | 18 and (laser ) near3 (source) | US-PGPUB; USPAT; USOCR; FPRS; EPO; JPO; DERWENT; IBM_TDB | OR | ON | 2008/09/18 20:15 |
| L22 | 3838 | 21 and (stress strain ) | US-PGPUB; USPAT; USOCR; FPRS; EPO; JPO; DERWENT; IBM_TDB | OR | ON | 2008/09/18 20:15 |
| L23 | 244 | 21 and (tensile) near3 (stress strain ) | US-PGPUB; USPAT; USOCR; FPRS; EPO; JPO; DERWENT; IBM_TDB | OR | ON | 2008/09/18 20:15 |

| | | | | | | |
|---|---|---|---|---|---|---|
| L24 | 237 | 23 and (coat$4 film ) | US-PGPUB; USPAT; USOCR; FPRS; EPO; JPO; DERWENT; IBM_TDB | OR | ON | 2008/09/18 20:15 |
| L25 | 189 | 24 and (wave$4 puls e) | US-PGPUB; USPAT; USOCR; FPRS; EPO; JPO; DERWENT; IBM_TDB | OR | ON | 2008/09/18 20:16 |
| L26 | 202 | 24 and (wave$4 pulse) | US-PGPUB; USPAT; USOCR; FPRS; EPO; JPO; DERWENT; IBM_TDB | OR | ON | 2008/09/18 20:16 |
| L27 | 8 | 26 and (stress strain) near3 (wave$4 pulse) | US-PGPUB; USPAT; USOCR; FPRS; EPO; JPO; DERWENT; IBM_TDB | OR | ON | 2008/09/18 20:17 |

9/18/08 8:20:04 PM

| Issue Classification | Application/Control No. | Applicant(s)/Patent Under Reexamination |
|---|---|---|
| | 11504981 | GUPTA ET AL. |
| | **Examiner** | **Art Unit** |
| | OCTAVIA DAVIS | 2855 |

| ORIGINAL | | INTERNATIONAL CLASSIFICATION | | | | | | | | | | |
|---|---|---|---|---|---|---|---|---|---|---|---|---|
| CLASS | SUBCLASS | CLAIMED | | | | | NON-CLAIMED | | | | | |
| 73 | 800 | G | 0 | 1 | L | 1 / 24 (2006.01.01) | | | | | | |

**CROSS REFERENCE(S)**

| CLASS | SUBCLASS (ONE SUBCLASS PER BLOCK) | | | | |
|---|---|---|---|---|---|
| | | | | | |

☐ Claims renumbered in the same order as presented by applicant ☐ CPA ☐ T.D. ☐ R.1.47

| Final | Original | Final | Original | Final | Original | Final | Original | Final | Original | Final | Original | Final | Original | Final | Original |
|---|---|---|---|---|---|---|---|---|---|---|---|---|---|---|---|
| 1 | 1 | 17 | 17 | | 33 | | | | | | | | | | |
| 2 | 2 | 18 | 18 | 33 | 34 | | | | | | | | | | |
| 3 | 3 | 19 | 19 | 34 | 35 | | | | | | | | | | |
| 4 | 4 | 20 | 20 | 35 | 36 | | | | | | | | | | |
| 5 | 5 | 21 | 21 | 36 | 37 | | | | | | | | | | |
| 6 | 6 | 22 | 22 | | | | | | | | | | | | |
| 7 | 7 | 23 | 23 | | | | | | | | | | | | |
| 8 | 8 | 24 | 24 | | | | | | | | | | | | |
| 9 | 9 | 25 | 25 | | | | | | | | | | | | |
| 10 | 10 | 26 | 26 | | | | | | | | | | | | |
| 11 | 11 | 27 | 27 | | | | | | | | | | | | |
| 12 | 12 | 28 | 28 | | | | | | | | | | | | |
| 13 | 13 | 29 | 29 | | | | | | | | | | | | |
| 14 | 14 | 30 | 30 | | | | | | | | | | | | |
| 15 | 15 | 31 | 31 | | | | | | | | | | | | |
| 16 | 16 | 32 | 32 | | | | | | | | | | | | |

| | | | |
|---|---|---|---|
| /OCTAVIA DAVIS/<br>Examiner.Art Unit 2855<br>(Assistant Examiner) | 9/22/08<br>(Date) | **Total Claims Allowed:**<br>36 | |
| /EDWARD LEFKOWITZ/<br>Supervisory Patent Examiner.Art Unit 2855<br>(Primary Examiner) | 09/23/2008<br>(Date) | O.G. Print Claim(s)<br>1 | O.G. Print Figure<br>1 |

| Search Notes | Application/Control No. | Applicant(s)/Patent Under Reexamination |
|---|---|---|
| | 11504981 | GUPTA ET AL. |
| | **Examiner** | **Art Unit** |
| | Davis, Octavia | 2855 |

## SEARCHED

| Class | Subclass | Date | Examiner |
|---|---|---|---|
| 73 | 777,862.49 | 9/16/08 | OD |
| 356 | 35.5 | 9/16/08 | OD |

## SEARCH NOTES

| Search Notes | Date | Examiner |
|---|---|---|
| East Text Search | 9/16/08 | OD |
| Assistance from M. Noori | 5/28/08 | OD |

## INTERFERENCE SEARCH

| Class | Subclass | Date | Examiner |
|---|---|---|---|
| | Interference Search and PG Pub | 9/16/08 | OD |

PTO/SB/30EFS (08/08)
Approved for use through 08/31/2008. OMB 0651-0031
U.S. Patent and Trademark Office; U.S. DEPARTMENT OF COMMERCE
Under the Paperwork Reduction Act of 1995, no persons are required to respond to a collection of information unless it contains a valid OMB control number.

# REQUEST FOR CONTINUED EXAMINATION(RCE)TRANSMITTAL
## (Submitted Only via EFS-Web)

| | | | | | | | |
|---|---|---|---|---|---|---|---|
| Application Number | 11504981 | Filing Date | 2006-08-15 | Docket Number (if applicable) | UC03-126-2US | Art Unit | 2855 |
| First Named Inventor | GUPTA, Vijay | | | Examiner Name | DAVIS, Octavia L. | | |

**This is a Request for Continued Examination (RCE) under 37 CFR 1.114 of the above-identified application.**
Request for Continued Examination (RCE) practice under 37 CFR 1.114 does not apply to any utility or plant application filed prior to June 8, 1995, or to any design application. The Instruction Sheet for this form is located at WWW.USPTO.GOV

## SUBMISSION REQUIRED UNDER 37 CFR 1.114

Note: If the RCE is proper, any previously filed unentered amendments and amendments enclosed with the RCE will be entered in the order in which they were filed unless applicant instructs otherwise. If applicant does not wish to have any previously filed unentered amendment(s) entered, applicant must request non-entry of such amendment(s).

☐ Previously submitted. If a final Office action is outstanding, any amendments filed after the final Office action may be considered as a submission even if this box is not checked.

- ☐ Consider the arguments in the Appeal Brief or Reply Brief previously filed on _____
- ☐ Other _____

☒ Enclosed

- ☒ Amendment/Reply
- ☐ Information Disclosure Statement (IDS)
- ☐ Affidavit(s)/ Declaration(s)
- ☐ Other _____

## MISCELLANEOUS

☐ Suspension of action on the above-identified application is requested under 37 CFR 1.103(c) for a period of months _____
(Period of suspension shall not exceed 3 months; Fee under 37 CFR 1.17(i) required)

☐ Other _____

## FEES

**The RCE fee under 37 CFR 1.17(e) is required by 37 CFR 1.114 when the RCE is filed.**
☒ The Director is hereby authorized to charge any underpayment of fees, or credit any overpayments, to Deposit Account No 071137

## SIGNATURE OF APPLICANT, ATTORNEY, OR AGENT REQUIRED

☒ Patent Practitioner Signature
☐ Applicant Signature

PTO/SB/30EFS (08/08)
Approved for use through 08/31/2008. OMB 0651-0031
U.S. Patent and Trademark Office; U.S. DEPARTMENT OF COMMERCE
Under the Paperwork Reduction Act of 1995, no persons are required to respond to a collection of information unless it contains a valid OMB control number.

| Signature of Registered U.S. Patent Practitioner | | | |
|---|---|---|---|
| Signature | /M. Robyn Carrillo/ | Date (YYYY-MM-DD) | 2008-08-22 |
| Name | M. Robyn Carrillo | Registration Number | 47474 |

This collection of information is required by 37 CFR 1.114. The information is required to obtain or retain a benefit by the public which is to file (and by the USPTO to process) an application. Confidentiality is governed by 35 U.S.C. 122 and 37 CFR 1.11 and 1.14. This collection is estimated to take 12 minutes to complete, including gathering, preparing, and submitting the completed application form to the USPTO. Time will vary depending upon the individual case. Any comments on the amount of time you require to complete this form and/or suggestions for reducing this burden, should be sent to the Chief Information Officer, U.S. Patent and Trademark Office, U.S. Department of Commerce, P.O. Box 1450, Alexandria, VA 22313-1450.

*If you need assistance in completing the form, call 1-800-PTO-9199 and select option 2.*

# Privacy Act Statement

The Privacy Act of 1974 (P.L. 93-579) requires that you be given certain information in connection with your submission of the attached form related to a patent application or patent. Accordingly, pursuant to the requirements of the Act, please be advised that: (1) the general authority for the collection of this information is 35 U.S.C. 2(b)(2); (2) furnishing of the information solicited is voluntary; and (3) the principal purpose for which the information is used by the U.S. Patent and Trademark Office is to process and/or examine your submission related to a patent application or patent. If you do not furnish the requested information, the U.S. Patent and Trademark Office may not be able to process and/or examine your submission, which may result in termination of proceedings or abandonment of the application or expiration of the patent.

The information provided by you in this form will be subject to the following routine uses:

1. The information on this form will be treated confidentially to the extent allowed under the Freedom of Information Act (5 U.S.C. 552) and the Privacy Act (5 U.S.C. 552a). Records from this system of records may be disclosed to the Department of Justice to determine whether the Freedom of Information Act requires disclosure of these record s.

2. A record from this system of records may be disclosed, as a routine use, in the course of presenting evidence to a court, magistrate, or administrative tribunal, including disclosures to opposing counsel in the course of settlement negotiations.

3. A record in this system of records may be disclosed, as a routine use, to a Member of Congress submitting a request involving an individual, to whom the record pertains, when the individual has requested assistance from the Member with respect to the subject matter of the record.

4. A record in this system of records may be disclosed, as a routine use, to a contractor of the Agency having need for the information in order to perform a contract. Recipients of information shall be required to comply with the requirements of the Privacy Act of 1974, as amended, pursuant to 5 U.S.C. 552a(m).

5. A record related to an International Application filed under the Patent Cooperation Treaty in this system of records may be disclosed, as a routine use, to the International Bureau of the World Intellectual Property Organization, pursuant to the Patent Cooperation Treaty.

6. A record in this system of records may be disclosed, as a routine use, to another federal agency for purposes of National Security review (35 U.S.C. 181) and for review pursuant to the Atomic Energy Act (42 U.S.C. 218(c)).

7. A record from this system of records may be disclosed, as a routine use, to the Administrator, General Services, or his/her designee, during an inspection of records conducted by GSA as part of that agency's responsibility to recommend improvements in records management practices and programs, under authority of 44 U.S.C. 2904 and 2906. Such disclosure shall be made in accordance with the GSA regulations governing inspection of records for this purpose, and any other relevant (i.e., GSA or Commerce) directive. Such disclosure shall not be used to make determinations about individuals.

8. A record from this system of records may be disclosed, as a routine use, to the public after either publication of the application pursuant to 35 U.S.C. 122(b) or issuance of a patent pursuant to 35 U.S.C. 151. Further, a record may be disclosed, subject to the limitations of 37 CFR 1.14, as a routine use, to the public if the record was filed in an application which became abandoned or in which the proceedings were terminated and which application is referenced by either a published application, an application open to public inspections or an issued patent.

9. A record from this system of records may be disclosed, as a routine use, to a Federal, State, or local law enforcement agency, if the USPTO becomes aware of a violation or potential violation of law or regulation.

## IN THE UNITED STATES PATENT AND TRADEMARK OFFICE

| | | | |
|---|---|---|---|
| Appl. No. | : | 11/504,981 | Confirmation No.: 4584 |
| Applicant | : | VIJAY GUPTA | |
| Title | : | GLASS-MODIFIED STRESS WAVES FOR SEPARATION OF ULTRA THIN FILMS AND NANOELECTRONICS DEVICE FABRICATION | |
| Filed | : | 08/15/2006 | |
| TC/A.U. | : | 2855 | |
| Examiner | : | DAVIS, OCTAVIA L. | |
| Docket No. | : | UC03-126-2US | |
| Cust. No. | : | 8156 | |

**Mail Stop Amendment**
**Commissioner for Patents**
**P.O. Box 1450**
**Alexandria, VA 22313-1450**

## RESPONSE TO FINAL OFFICE ACTION

Dear Sir:

In response to the Final Office Action mailed on May 28, 2008, and in consideration of the Request for Continued Examination filed concurrently with this response, please amend the above-identified U.S. patent application as follows:

**Amendments to the Specification** begin on page 2 of this paper.

**Amendments to the Claims** are reflected in the listing of claims, which begins on page 3 of this paper.

**Remarks** begin on page 10 of this paper.


Boeing Ex. 1002, p. 35 of 177
Boeing v. Regents Univ. Cal.

**Amendments to the Specification:**

Please replace paragraph [0014] with the following amended paragraph:

**[0014]** In one embodiment, the glass is configured to propagate the stress wave as a result of impingement by a Nd-Yag laser beam directed in the first axis. Typically, the glass element is bonded to the second side of the substrate. The glass element may comprise Pyrex, soda lime ~~sodalime~~, quartz, borosilicate or similar material. The glass element may have any thickness, but preferably has a thickness ranging from approximately 0.1 mm to approximately 5 mm.

Please replace paragraph [0070] with the following amended paragraph:

**[0070]** The stress waves were measured with glass substrate elements 108 comprising Pyrex, soda lime ~~sodalime~~, quartz, and borosilicate glasses using the experimental procedure that is embodied in FIG. 1 and US Patent No. 5,438,402, incorporated herein by reference in its entirety. To define the entering stress wave profile in the glass specimen accurately, these tests were performed by bonding the glass slides of nominal 1.0mm thickness to 0.7mm thick Si wafers using a 0.5 μm -thick optical grade EPOTECH 301 FL epoxy. The stress wave was generated inside the Si by exfoliating a waterglass-constrained Al film 104 in a manner discussed above. For interferometeric measurements, a 400Å layer of Al was deposited on the free surface of the glass.

**Amendments to the Claims:**

Claims 1, 13, 25, and 32 have been amended. Claims 8, 19, and 27 have been amended to correct the misspelled the term "sodalime" to its correct spelling of "soda lime". Claim 33 has been cancelled. Claims 1-32 and 34-37 are pending. This listing of claims will replace all prior versions, and listings, of claims in the application:

**Listing of Claims:**

1. (currently amended): An apparatus for generating a tensile stress between a substrate and a coating, comprising:

a substrate having a thickness, said thickness defined by a first side and a second side in a first axis;

a coating applied to the first side of the substrate such that the coating and substrate are axially spaced along the first axis in intimate facing contact with each other such to form a coating/substrate interface; and

a glass element disposed on the second side of the substrate and axially spaced along the first axis;

wherein the glass element is configured to propagate <u>and modify</u> a stress wave to the coating/substrate interface to generate a tensile stress between the substrate and the coating.

2. (original): An apparatus as recited in claim 1, wherein the tensile stress is configured to separate the coating from the substrate at the coating/substrate interface.

3. (original): An apparatus as recited in claim 1, wherein the glass is configured to propagate the stress wave as a result of impingement by a Nd-Yag laser beam directed in the first axis.

4. (original): An apparatus as recited in claim 1, wherein the stress wave has a length ranging from approximately 5 nanoseconds to approximately 1 microsecond.

5. (original): An apparatus as recited in claim 4, wherein the stress wave comprises a rarefaction shock formation.

6. (original): An apparatus as recited in claim 1, wherein the coating has a thickness less than approximately 0.5 μm.

7. (original): An apparatus as recited in claim 1, wherein the glass element is bonded to the second side of the substrate.

8. (currently amended): An apparatus as recited in claim 1, wherein the glass element comprises one of the following: Pyrex, soda lime ~~sodalime~~, quartz, or borosilicate.

9. (original): An apparatus as recited in claim 1, wherein the glass element has a thickness ranging from approximately 0.1 mm to approximately 5 mm.

10. (original): An apparatus as recited in claim 1, wherein the substrate comprises silicon.

11. (original): An apparatus as recited in claim 1, further comprising a constraining element disposed adjacent to the glass element.

12. (original): An apparatus as recited in claim 11, further comprising an energy absorbing layer disposed between the constraining layer and the glass element.

13. (currently amended): A method for separating a coating from a substrate, the substrate having a first side and a second side transversely disposed in a first axis, the coating applied to the first side of the substrate such that the coating and substrate are axially spaced along the first axis in intimate facing contact to form a coating/substrate interface, the method comprising:

positioning a glass element along the first axis on the second side of the substrate;

directing a laser pulse in the first axis at the glass element;

propagating <u>and modifying</u> a stress wave through the glass element to the coating/substrate interface to generate a tensile force between the substrate and the coating; and

separating the coating from the substrate as a result of the stress wave-generated tensile force.

14. (original): A method as recited in claim 13, wherein directing a laser pulse in the first axis comprises directing a Nd-Yag laser beam in the first axis.

15. (original): A method as recited in claim 13, wherein propagating a stress wave comprises propagating a stress wave having a length ranging from approximately 5 nanoseconds to approximately 1 microsecond.

16. (original): A method as recited in claim 15, wherein the stress wave comprises a rarefaction shock formation.

17. (original): A method as recited in claim 15, wherein the stress wave is configured to separate a coating having a thickness less than approximately 0.5 μm.

18. (original): A method as recited in claim 15, wherein positioning a glass element along the first axis comprises bonding the glass element to the second side of the substrate.

19. (currently amended): A method as recited in claim 13, wherein the glass element comprises one of the following: Pyrex, soda lime ~~sodalime~~, quartz, or borosilicate.

20. (original): A method as recited in claim 19, wherein the glass element has a thickness ranging from approximately 0.1 mm to approximately 5 mm.

21. (original): A method as recited in claim 13, further comprising positioning a constraining element adjacent to a free side of the glass element.

22. (original): A method as recited in claim 21, further comprising:

coating an energy absorbing layer on the free side of the glass element between the constraining layer and the glass element;

wherein directing a laser pulse in the first axis comprises directing the laser pulse the energy absorbing layer coated on the glass element.

23. (original): A method as recited in claim 13, wherein the stress generated by the stress wave at the coating/substrate interface exceeds approximately 1.0 GPa.

24. (original): A method as recited in claim 23, wherein the stress generated by the stress wave at the coating/substrate interface exceeds approximately 2.0 GPa.

25. (currently amended): An apparatus for separating a nanostructure from a first substrate, the nanostructure attached to a front side of the first substrate,

comprising:

a glass element disposed on a back side of the first substrate opposite the nanostructure; and

a laser source configured to direct a laser beam at the glass element;

wherein the glass element is configured to propagate and modify a stress wave to the nanostructure as a result of impingement by the laser beam to generate a tensile stress between the nanostructure and the first substrate to separate the nanostructure from the first substrate.

26. (original): An apparatus as recited in claim 25, wherein the laser source comprises a Nd-Yag laser.

27. (currently amended): An apparatus as recited in claim 25, wherein the glass element comprises one of the following: Pyrex, soda lime ~~sodalime~~, quartz, or borosilicate.

28. (original): An apparatus as recited in claim 25, further comprising an energy absorbing layer disposed between the constraining layer and the glass element.

29. (original): An apparatus as recited in claim 25, further comprising:

a second substrate located opposite the front side of the first substrate;

wherein the second substrate is configured to receive the nanostructure once separated from the first substrate.

30. (original): An apparatus as recited in claim 29, further comprising:

an adhesive layer disposed on the second substrate;

wherein the adhesive layer is configured to form a bond between the nanostructure and the second substrate.

31. (original): An apparatus as recited in claim 29, further comprising one or more spacers separating the first substrate from the second substrate.

32. (currently amended): An apparatus for transferring a silicon platform to a receiving substrate, comprising:

a glass substrate disposed on a back side of the silicon platform;

a laser source configured to direct a laser beam at the glass element;

wherein the glass element is configured to generate a tensile stress between the silicon platform and the glass substrate as a result of impingement by the laser beam; and

wherein said tensile stress is configured to launch the silicon platform to the receiving substrate; and

. an energy absorbing layer adjacent the glass substrate opposite from the silicon platform;

wherein the energy absorbing layer and the glass substrate are configured to propagate <u>and modify</u> a stress wave across the glass substrate to generate the tensile stress between the silicon platform and the glass substrate.

33. (cancelled)

34. (original): An apparatus as recited in claim 32, wherein the laser beam passes through the glass substrate to generate the tensile stress between the silicon platform and the glass substrate.

35. (previously presented): An apparatus as recited in claim 32, wherein the silicon platform comprises one or more circuits.

36. (previously presented): An apparatus as recited in claim 32, wherein the receiving substrate comprises a polymer.

37. (previously presented): An apparatus as recited in claim 36, wherein the receiving substrate is spun coated with a polymer film.

## REMARKS

In the specification, paragraphs [0014] and [0070] were amended to correct the misspelled term "sodalime" with the correct spelling "soda lime".

This Response is submitted responsive to a Final Office Action mailed on May 28, 2008 in which claims 1-32 and 34-37 were pending, all of which were rejected. In light of amendments to all independent claims, all rejections are respectfully traversed, and reconsideration is hereby requested.

Applicant, in the instant application, has made changes to all independent claims relating to the fact that the glass element **modifies** the stress wave as it transits through. While it is still believed that the un-amended claims were patentably distinct over Applicant's cited prior art in US patent number 5,438,402 (the '402 patent), in an effort to more timely prosecute the application, the function of the glass element has been elucidated as modifying the input stress wave.

Applicant's arguments in the first two responses to the Examiner's rejections are hereby incorporated by reference, but are not rehashed here. Only those arguments relating specifically to the modification of the input stress wave will be more specifically addressed below.

Glass-Modified Stress Waves

The glass stress wave modification element is particularly important to this invention, as it has been found that with sufficiently high pulse pressures, glass materials tend to modify an input stress wave to where it has a virtually instantaneous post-peak drop time, resulting in a "rarefaction shock".

It is believed that this behavior results from certain glass-like materials being "anomalous materials", which, with sufficiently high pressure stress waves with a short enough duration, enters a regime of stress wave propagation where the velocity of the stress wave decreases with increasing pressure. This property has the effect of

compressing the tail end of a propagated shock, **thereby modifying the input stress wave**, resulting in a "rarefied shock" pulse tail.

In the application paragraph [0073], the properties of glass are explained:

> "[0073] FIGS. 5A and 5B shows a series of stress pulse profiles with increasing laser fluence, measured with a glass substrate element 108 comprising soda lime glass. As illustrated in FIG. 5A, at low stress amplitudes, the profiles are similar to that in Si and other materials, having a finite rise-time and gradual post-peak decay. However, as the stress pulse amplitude exceeds a certain threshold, the rise-time of the stress wave 120 gets longer but the post-peak stress profile starts 122 to decay rather quickly. Ultimately, a profile is attained with the post-peak stress dropping virtually instantaneously (the drop time is within the resolution limit of our instrumentation), much like a 'rarefaction shock.' The **modification in the stress wave profile** as a result of the glass substrate element sample assembly 100 compared with a sample assembly having only a Si substrate is shown in FIG. 5B." (Underline and bold added)

The **"modification in the stress wave profile"** is important because it allows for the generation of controlled tension stresses in films of arbitrarily small thicknesses, useful for removing the films from the substrate through spallation due to an application of a rarefaction shock:

> "[0067] ... if the post-peak decay time is reduced to zero, i.e. the wave profile has a "rarefaction shock," then the interface tensile stress for a film of arbitrarily small thickness theoretically will equal the amplitude of the incoming compression pulse. In accordance with the present

invention, this theoretical possibility has been realized experimentally with sample assemblies using glass layers.." (Underline added)

Since arbitrarily small thicknesses may now be used, arbitrarily thin films on substrate surfaces may be detached by exceeding the interface tensile stress limit between the film and the substrate to which it is attached. Of course, if the interface tensile stress limit exceeds the bulk substrate tensile stress limit, the substrate itself will likely fracture first.

Now that the importance of the glass element being configured to propagate and **modify an input stress wave** to the coating/substrate interface to generate a tensile stress between the substrate and the coating, we may better review the specific claim rejections.

1. Claim Rejections under 35 U.S.C. 102(b)

The Examiner alleges a rejection of claims 1-37 under 35 U.S.C. 102(b) as being anticipated by Gupta in US patent application 5,438,402 (the '402 patent). Applicant respectfully traverses these rejections, and kindly requests reconsideration of all claims pursuant to the arguments presented below.

Claim 1

The Examiner rejects claim 1 as being anticipated by Gupta, citing "Col. 5, lines 40-58, Col. 6, lines 28-43 and Col. 12, lines 34-43."

Claim 1 has been amended to incorporate the limitation: " wherein the glass element is configured to propagate and modify a stress wave to the coating/substrate interface to generate a tensile stress between the substrate and the coating". The '402 patent teaches no such modification of a stress wave.

Because the '402 patent fails to teach the claim limitation of a "glass element ... configured to propagate and modify a stress wave to the coating/substrate interface to generate a tensile stress between the substrate and the coating", then the Gupta '402 reference fails to be a suitable 30 U.S.C. 102(b) reference, failing to teach each and every element and limitation of claim 1, and is thereby patentably distinct.

Claims 2-12

As dependent claim inherit all of the dependencies in their chain of dependencies, dependent claims 2-12 are also patentably distinct from the Gupta '402 reference based on the same reasoning above.

Claims 13 and 14-24

Claim 13, as currently amended, contains the limitation: "...propagating and modifying a stress wave through the glass element to the coating/substrate interface to generate a tensile force between the substrate and the coating; and separating the coating from the substrate as a result of the stress wave-generated tensile force."

The arguments presented above for claim 1 are hereby incorporated, and are equally applicable. Thus, it is respectfully submitted that claim 13, and its dependent claims 14-24 are all patentably distinct from the Gupta '402 patent.

Claims 25 and 26-31

Claim 25, as currently amended, now contains the limitation: "...the glass element is configured to propagate and modify a stress wave to the nanostructure as a result of impingement by the laser beam to generate a tensile stress between the nanostructure and the first substrate to separate the nanostructure from the first substrate."

The arguments presented above for claim 1 are hereby incorporated, and are equally applicable. Thus, it is respectfully submitted that claim 25, and its dependent

claims 26-31 are all patentably distinct from the Gupta '402 patent.

Claims 32 and 34-37

Claim 32, as currently amended, now contains the limitation: "...an energy absorbing layer adjacent the glass substrate opposite from the silicon platform; wherein the energy absorbing layer and the glass substrate are configured to propagate and modify a stress wave across the glass substrate to generate the tensile stress between the silicon platform and the glass substrate."

The arguments presented above for claim 1 are hereby incorporated, and are equally applicable.

Claim 33 was previously cancelled

Claims 8, 19, and 27 Spelling Correction

Incidentally, Applicant has amended Claims 8, 19, and 27 to correct the misspelled term "sodalime" to its correct spelling of "soda lime".

2. Examiner's Interview

On July 22, 2008, Dr. Vijay Gupta telephonically spoke at length with Examiner Octavia Davis regarding the differences between Applicant's instant case, and Dr. Gupta's prior '402 patent. Dr. Gupta was telephonically represented by patent attorney Joseph R. Milner, USPTO registration number 42896, and not by Mr. Knoller, as incorrectly stated in the Examiner's Interview statement dated 7/29/2008.

The components of the independent Claims 1, 13, 25, and 32 were compared and contrasted with those in the '402 patent. No agreement was reached, although Examiner Davis suggested amending the claims to more clearly define that the glass element modifies the stress wave as it propagates through the glass element. These suggested amendments have been incorporated in this response. It is expected that with these amendments, issuance of the patent would likely be secured.

3. Conclusion

Based on the foregoing, Applicants respectfully request that the various grounds for rejection in the Office Action be reconsidered and withdrawn with respect to the presently amended form of the claims, and that a Notice of Allowance be issued for the present application to pass to issuance.

In the event any further matters remain at issue with respect to the present application, Applicants respectfully request that the Examiner please contact the undersigned below at the telephone number indicated in order to discuss such matter prior to the next action on the merits of this application.

Date: August 22, 2008

Respectfully submitted,

John P. O'Banion, Reg. No. 33,201
M. Robyn Carrillo, Reg. No. 47,474
Joseph R. Milner, Reg. No. 42, 896
O'BANION & RITCHEY LLP
400 Capitol Mall, Suite 1550
Sacramento, CA 95814
(916) 498-1010

# Electronic Patent Application Fee Transmittal

| | |
|---|---|
| **Application Number:** | 11504981 |
| **Filing Date:** | 15-Aug-2006 |
| **Title of Invention:** | Glass-modified stress waves for separation of ultra thin films and nanoelectronics device fabrication |
| **First Named Inventor/Applicant Name:** | Vijay Gupta |
| **Filer:** | M. Robyn Carrillo |
| **Attorney Docket Number:** | UC03-126-2US |

Filed as Small Entity

## Utility under 35 USC 111(a) Filing Fees

| Description | Fee Code | Quantity | Amount | Sub-Total in USD($) |
|---|---|---|---|---|
| **Basic Filing:** | | | | |
| **Pages:** | | | | |
| **Claims:** | | | | |
| **Miscellaneous-Filing:** | | | | |
| **Petition:** | | | | |
| **Patent-Appeals-and-Interference:** | | | | |
| **Post-Allowance-and-Post-Issuance:** | | | | |
| **Extension-of-Time:** | | | | |

| Description | Fee Code | Quantity | Amount | Sub-Total in USD($) |
|---|---|---|---|---|
| **Miscellaneous:** | | | | |
| Request for continued examination | 2801 | 1 | 405 | 405 |
| | | **Total in USD ($)** | | **405** |

# Electronic Acknowledgement Receipt

| | |
|---|---|
| **EFS ID:** | 3824338 |
| **Application Number:** | 11504981 |
| **International Application Number:** | |
| **Confirmation Number:** | 4584 |
| **Title of Invention:** | Glass-modified stress waves for separation of ultra thin films and nanoelectronics device fabrication |
| **First Named Inventor/Applicant Name:** | Vijay Gupta |
| **Customer Number:** | 08156 |
| **Filer:** | M. Robyn Carrillo |
| **Filer Authorized By:** | |
| **Attorney Docket Number:** | UC03-126-2US |
| **Receipt Date:** | 22-AUG-2008 |
| **Filing Date:** | 15-AUG-2006 |
| **Time Stamp:** | 13:41:59 |
| **Application Type:** | Utility under 35 USC 111(a) |

## Payment information:

| | |
|---|---|
| Submitted with Payment | yes |
| Payment Type | Deposit Account |
| Payment was successfully received in RAM | $405 |
| RAM confirmation Number | 6943 |
| Deposit Account | 071137 |
| Authorized User | |

The Director of the USPTO is hereby authorized to charge indicated fees and credit any overpayment as follows:

Charge any Additional Fees required under 37 C.F.R. Section 1.16 (National application filing, search, and examination fees)

Charge any Additional Fees required under 37 C.F.R. Section 1.17 (Patent application and reexamination processing fees)

Charge any Additional Fees required under 37 C.F.R. Section 1.19 (Document supply fees)

Charge any Additional Fees required under 37 C.F.R. Section 1.20 (Post Issuance fees)

Charge any Additional Fees required under 37 C.F.R. Section 1.21 (Miscellaneous fees and charges)

## File Listing:

| Document Number | Document Description | File Name | File Size(Bytes)/ Message Digest | Multi Part /.zip | Pages (if appl.) |
|---|---|---|---|---|---|
| 1 | Request for Continued Examination (RCE) | UC03_126_2US_RCE.pdf | 709525<br>70170f22828a13a7322ead9dfda5df3ab8b b972c | no | 3 |
| **Warnings:** | | | | | |
| **Information:** | | | | | |
| 2 | | UC03_126_2US_response_to_0 52808_OA.pdf | 104708<br>a39b5795fa48985d403f736382e64108f165 1f/f | yes | 15 |

**Multipart Description/PDF files in .zip description**

| Document Description | Start | End |
|---|---|---|
| Amendment Submitted/Entered with Filing of CPA/RCE | 1 | 1 |
| Specification | 2 | 2 |
| Claims | 3 | 9 |
| Applicant Arguments/Remarks Made in an Amendment | 10 | 15 |

| | | | | | |
|---|---|---|---|---|---|
| **Warnings:** | | | | | |
| **Information:** | | | | | |
| 3 | Fee Worksheet (PTO-06) | fee-info.pdf | 30279<br>ed6205877e2fde59772895d874e609e0060 1dd9d | no | 2 |
| **Warnings:** | | | | | |
| **Information:** | | | | | |
| | | **Total Files Size (in bytes):** | 844512 | | |

**This Acknowledgement Receipt evidences receipt on the noted date by the USPTO of the indicated documents, characterized by the applicant, and including page counts, where applicable. It serves as evidence of receipt similar to a Post Card, as described in MPEP 503.**

**New Applications Under 35 U.S.C. 111**
**If a new application is being filed and the application includes the necessary components for a filing date (see 37 CFR 1.53(b)-(d) and MPEP 506), a Filing Receipt (37 CFR 1.54) will be issued in due course and the date shown on this Acknowledgement Receipt will establish the filing date of the application.**

**National Stage of an International Application under 35 U.S.C. 371**
**If a timely submission to enter the national stage of an international application is compliant with the conditions of 35 U.S.C. 371 and other applicable requirements a Form PCT/DO/EO/903 indicating acceptance of the application as a national stage submission under 35 U.S.C. 371 will be issued in addition to the Filing Receipt, in due course.**

**New International Application Filed with the USPTO as a Receiving Office**
**If a new international application is being filed and the international application includes the necessary components for an international filing date (see PCT Article 11 and MPEP 1810), a Notification of the International Application Number and of the International Filing Date (Form PCT/RO/105) will be issued in due course, subject to prescriptions concerning national security, and the date shown on this Acknowledgement Receipt will establish the international filing date of the application.**

PTO/SB/06 (07-06)
Approved for use through 1/31/2007. OMB 0651-0032
U.S. Patent and Trademark Office; U.S. DEPARTMENT OF COMMERCE
Under the Paperwork Reduction Act of 1995, no persons are required to respond to a collection of information unless it displays a valid OMB control number.

# PATENT APPLICATION FEE DETERMINATION RECORD

Substitute for Form PTO-875

| Application or Docket Number | Filing Date | ☐ To be Mailed |
|---|---|---|
| 11/504,981 | 08/15/2006 | |

## APPLICATION AS FILED – PART I

| FOR | (Column 1) NUMBER FILED | (Column 2) NUMBER EXTRA | SMALL ENTITY ☒ RATE ($) | FEE ($) | OR | OTHER THAN SMALL ENTITY RATE ($) | FEE ($) |
|---|---|---|---|---|---|---|---|
| ☐ BASIC FEE (37 CFR 1.16(a), (b), or (c)) | N/A | N/A | N/A | | | N/A | |
| ☐ SEARCH FEE (37 CFR 1.16(k), (i), or (m)) | N/A | N/A | N/A | | | N/A | |
| ☐ EXAMINATION FEE (37 CFR 1.16(o), (p), or (q)) | N/A | N/A | N/A | | | N/A | |
| TOTAL CLAIMS (37 CFR 1.16(i)) | minus 20 = | * | X $ = | | OR | X $ = | |
| INDEPENDENT CLAIMS (37 CFR 1.16(h)) | minus 3 = | * | X $ = | | | X $ = | |
| ☐ APPLICATION SIZE FEE (37 CFR 1.16(s)) | If the specification and drawings exceed 100 sheets of paper, the application size fee due is $250 ($125 for small entity) for each additional 50 sheets or fraction thereof. See 35 U.S.C. 41(a)(1)(G) and 37 CFR 1.16(s). | | | | | | |
| ☐ MULTIPLE DEPENDENT CLAIM PRESENT (37 CFR 1.16(j)) | | | | | | | |
| | | | TOTAL | | | TOTAL | |

* If the difference in column 1 is less than zero, enter "0" in column 2.

## APPLICATION AS AMENDED – PART II

| AMENDMENT 08/22/2008 | (Column 1) CLAIMS REMAINING AFTER AMENDMENT | | (Column 2) HIGHEST NUMBER PREVIOUSLY PAID FOR | (Column 3) PRESENT EXTRA | SMALL ENTITY RATE ($) | ADDITIONAL FEE ($) | OR | OTHER THAN SMALL ENTITY RATE ($) | ADDITIONAL FEE ($) |
|---|---|---|---|---|---|---|---|---|---|
| Total (37 CFR 1.16(i)) | * 36 | Minus | ** 37 | = 0 | X $25 = | 0 | OR | X $ = | |
| Independent (37 CFR 1.16(h)) | * 4 | Minus | ***4 | = 0 | X $105 = | 0 | OR | X $ = | |
| ☐ Application Size Fee (37 CFR 1.16(s)) | | | | | | | | | |
| ☐ FIRST PRESENTATION OF MULTIPLE DEPENDENT CLAIM (37 CFR 1.16(j)) | | | | | | | OR | | |
| | | | | | TOTAL ADD'L FEE | 0 | OR | TOTAL ADD'L FEE | |

| AMENDMENT | (Column 1) CLAIMS REMAINING AFTER AMENDMENT | | (Column 2) HIGHEST NUMBER PREVIOUSLY PAID FOR | (Column 3) PRESENT EXTRA | RATE ($) | ADDITIONAL FEE ($) | | RATE ($) | ADDITIONAL FEE ($) |
|---|---|---|---|---|---|---|---|---|---|
| Total (37 CFR 1.16(i)) | * | Minus | ** | = | X $ = | | OR | X $ = | |
| Independent (37 CFR 1.16(h)) | * | Minus | *** | = | X $ = | | OR | X $ = | |
| ☐ Application Size Fee (37 CFR 1.16(s)) | | | | | | | | | |
| ☐ FIRST PRESENTATION OF MULTIPLE DEPENDENT CLAIM (37 CFR 1.16(j)) | | | | | | | OR | | |
| | | | | | TOTAL ADD'L FEE | | OR | TOTAL ADD'L FEE | |

* If the entry in column 1 is less than the entry in column 2, write "0" in column 3.

** If the "Highest Number Previously Paid For" IN THIS SPACE is less than 20, enter "20".

*** If the "Highest Number Previously Paid For" IN THIS SPACE is less than 3, enter "3".

The "Highest Number Previously Paid For" (Total or Independent) is the highest number found in the appropriate box in column 1.

Legal Instrument Examiner:
/THERESA I. OKON/

This collection of information is required by 37 CFR 1.16. The information is required to obtain or retain a benefit by the public which is to file (and by the USPTO to process) an application. Confidentiality is governed by 35 U.S.C. 122 and 37 CFR 1.14. This collection is estimated to take 12 minutes to complete, including gathering, preparing, and submitting the completed application form to the USPTO. Time will vary depending upon the individual case. Any comments on the amount of time you require to complete this form and/or suggestions for reducing this burden, should be sent to the Chief Information Officer, U.S. Patent and Trademark Office, U.S. Department of Commerce, P.O. Box 1450, Alexandria, VA 22313-1450. DO NOT SEND FEES OR COMPLETED FORMS TO THIS ADDRESS. **SEND TO: Commissioner for Patents, P.O. Box 1450, Alexandria, VA 22313-1450.**

*If you need assistance in completing the form, call 1-800-PTO-9199 and select option 2.*

UNITED STATES PATENT AND TRADEMARK OFFICE

UNITED STATES DEPARTMENT OF COMMERCE
United States Patent and Trademark Office
Address: COMMISSIONER FOR PATENTS
P.O. Box 1450
Alexandria, Virginia 22313-1450
www.uspto.gov

| APPLICATION NO. | FILING DATE | FIRST NAMED INVENTOR | ATTORNEY DOCKET NO. | CONFIRMATION NO. |
|---|---|---|---|---|
| 11/504,981 | 08/15/2006 | Vijay Gupta | UC03-126-2US | 4584 |

8156 7590 07/29/2008
JOHN P. O'BANION
O'BANION & RITCHEY LLP
400 CAPITOL MALL SUITE 1550
SACRAMENTO, CA 95814

| EXAMINER |
|---|
| DAVIS, OCTAVIA L |

| ART UNIT | PAPER NUMBER |
|---|---|
| 2855 | |

| MAIL DATE | DELIVERY MODE |
|---|---|
| 07/29/2008 | PAPER |

**Please find below and/or attached an Office communication concerning this application or proceeding.**

The time period for reply, if any, is set in the attached communication.

| Interview Summary | Application No. | Applicant(s) | |
|---|---|---|---|
| | 11/504,981 | GUPTA ET AL. | |
| | Examiner | Art Unit | |
| | OCTAVIA DAVIS | 2855 | |

All participants (applicant, applicant's representative, PTO personnel):

(1) *Octavia Davis (Ex)*.

(2) *Mr. Knoller (Att)*.

(3)*Mr. Gupta (Inv)*.

(4)_____.

Date of Interview: *22 July 2008*.

Type: a)☒ Telephonic b)☐ Video Conference
c)☐ Personal [copy given to: 1)☐ applicant 2)☐ applicant's representative]

Exhibit shown or demonstration conducted: d)☐ Yes e)☒ No.
If Yes, brief description: _____.

Claim(s) discussed: *1,13,25 and 32*.

Identification of prior art discussed: *P/A of record*.

Agreement with respect to the claims f)☐ was reached. g)☒ was not reached. h)☐ N/A.

Substance of Interview including description of the general nature of what was agreed to if an agreement was reached, or any other comments: *Applicant discussed the differences between the claims and the main reference to Gupta. Namely, the difference between the wave modifier 106 in Fig. 4 and the constraining medium 26 in Fig. 1. Applicant proposed to amend the claims to further differentiate the claims from the art applied. The examiner will review applicant's response upon receipt*.

(A fuller description, if necessary, and a copy of the amendments which the examiner agreed would render the claims allowable, if available, must be attached. Also, where no copy of the amendments that would render the claims allowable is available, a summary thereof must be attached.)

THE FORMAL WRITTEN REPLY TO THE LAST OFFICE ACTION MUST INCLUDE THE SUBSTANCE OF THE INTERVIEW. (See MPEP Section 713.04). If a reply to the last Office action has already been filed, APPLICANT IS GIVEN A NON-EXTENDABLE PERIOD OF THE LONGER OF ONE MONTH OR THIRTY DAYS FROM THIS INTERVIEW DATE, OR THE MAILING DATE OF THIS INTERVIEW SUMMARY FORM, WHICHEVER IS LATER, TO FILE A STATEMENT OF THE SUBSTANCE OF THE INTERVIEW. See Summary of Record of Interview requirements on reverse side or on attached sheet.

/Octavia Davis/
Examiner, Art Unit 2855
Examiner's signature, if required

Examiner Note: You must sign this form unless it is an Attachment to a signed Office action.



Boeing Ex. 1002, p. 57 of 177
Boeing v. Regents Univ. Cal.

UNITED STATES PATENT AND TRADEMARK OFFICE

UNITED STATES DEPARTMENT OF COMMERCE
United States Patent and Trademark Office
Address: COMMISSIONER FOR PATENTS
P.O. Box 1450
Alexandria, Virginia 22313-1450
www.uspto.gov

| APPLICATION NO. | FILING DATE | FIRST NAMED INVENTOR | ATTORNEY DOCKET NO. | CONFIRMATION NO. |
|---|---|---|---|---|
| 11/504,981 | 08/15/2006 | Vijay Gupta | UC03-126-2US | 4584 |

8156 7590 05/28/2008
JOHN P. O'BANION
O'BANION & RITCHEY LLP
400 CAPITOL MALL SUITE 1550
SACRAMENTO, CA 95814

| EXAMINER |
|---|
| DAVIS, OCTAVIA L |

| ART UNIT | PAPER NUMBER |
|---|---|
| 2855 | |

| MAIL DATE | DELIVERY MODE |
|---|---|
| 05/28/2008 | PAPER |

**Please find below and/or attached an Office communication concerning this application or proceeding.**

The time period for reply, if any, is set in the attached communication.

| Office Action Summary | Application No. | Applicant(s) | |
|---|---|---|---|
| | 11/504,981 | GUPTA ET AL. | |
| | Examiner | Art Unit | |
| | OCTAVIA DAVIS | 2855 | |

*-- The MAILING DATE of this communication appears on the cover sheet with the correspondence address --*

**Period for Reply**

A SHORTENED STATUTORY PERIOD FOR REPLY IS SET TO EXPIRE 3 MONTH(S) OR THIRTY (30) DAYS, WHICHEVER IS LONGER, FROM THE MAILING DATE OF THIS COMMUNICATION.

- Extensions of time may be available under the provisions of 37 CFR 1.136(a). In no event, however, may a reply be timely filed after SIX (6) MONTHS from the mailing date of this communication.
- If NO period for reply is specified above, the maximum statutory period will apply and will expire SIX (6) MONTHS from the mailing date of this communication.
- Failure to reply within the set or extended period for reply will, by statute, cause the application to become ABANDONED (35 U.S.C. § 133). Any reply received by the Office later than three months after the mailing date of this communication, even if timely filed, may reduce any earned patent term adjustment. See 37 CFR 1.704(b).

**Status**

1)☒ Responsive to communication(s) filed on *20 February 2008*.

2a)☒ This action is **FINAL**. 2b)☐ This action is non-final.

3)☐ Since this application is in condition for allowance except for formal matters, prosecution as to the merits is closed in accordance with the practice under *Ex parte Quayle*, 1935 C.D. 11, 453 O.G. 213.

**Disposition of Claims**

4)☒ Claim(s) *1-32 and 34-37* is/are pending in the application.

4a) Of the above claim(s) _____ is/are withdrawn from consideration.

5)☐ Claim(s) _____ is/are allowed.

6)☒ Claim(s) *1-32 and 34-37* is/are rejected.

7)☐ Claim(s) _____ is/are objected to.

8)☐ Claim(s) _____ are subject to restriction and/or election requirement.

**Application Papers**

9)☐ The specification is objected to by the Examiner.

10)☐ The drawing(s) filed on _____ is/are: a)☐ accepted or b)☐ objected to by the Examiner.

Applicant may not request that any objection to the drawing(s) be held in abeyance. See 37 CFR 1.85(a).

Replacement drawing sheet(s) including the correction is required if the drawing(s) is objected to. See 37 CFR 1.121(d).

11)☐ The oath or declaration is objected to by the Examiner. Note the attached Office Action or form PTO-152.

**Priority under 35 U.S.C. § 119**

12)☐ Acknowledgment is made of a claim for foreign priority under 35 U.S.C. § 119(a)-(d) or (f).

a)☐ All b)☐ Some * c)☐ None of:

1.☐ Certified copies of the priority documents have been received.

2.☐ Certified copies of the priority documents have been received in Application No. _____.

3.☐ Copies of the certified copies of the priority documents have been received in this National Stage application from the International Bureau (PCT Rule 17.2(a)).

* See the attached detailed Office action for a list of the certified copies not received.

**Attachment(s)**

1) ☐ Notice of References Cited (PTO-892)
2) ☐ Notice of Draftsperson's Patent Drawing Review (PTO-948)
3) ☐ Information Disclosure Statement(s) (PTO/SB/08) Paper No(s)/Mail Date _____.
4) ☐ Interview Summary (PTO-413) Paper No(s)/Mail Date. _____.
5) ☐ Notice of Informal Patent Application
6) ☐ Other: _____.

## DETAILED ACTION

### *Claim Rejections - 35 USC § 102*

1. The following is a quotation of the appropriate paragraphs of 35 U.S.C. 102 that form the basis for the rejections under this section made in this Office action:

> A person shall be entitled to a patent unless - (b) the invention was patented or described in a printed publication in this or a foreign country or in public use or on sale in this country, more than one year prior to the date of application for patent in the United States.

2. Claims 1 - 37 are rejected under 35 U.S.C. 102(b) as being anticipated by Gupta (5,438,402).

Regarding claim 1, Gupta discloses a system and method for measuring the interface tensile strength of planar interfaces comprising a substrate 30 having a thickness, said thickness defined by a first side and a second side in a first axis, a coating 32 applied to the first side such that the coating and substrate are axially spaced along the first axis in intimate facing contact with each other and a glass element 26 disposed on the second side of the substrate and axially spaced along the first axis, the glass element propagating a stress wave to the coating and substrate (See Col. 5, lines 40 - 58, Col. 6, lines 28 – 43, Col. 12, lines 34 – 43, Col. 22, lines 60 – 65, Col. 23, lines 1 – 3, Col. 25, lines 38 – 47 and Col. 27, lines 29 – 35).

Regarding claim 2, the tensile stress separates the coating 32 from the substrate 30 at the interface (See Col. 6, lines 43 - 54).

Regarding claims 3, 13, 14, 25, 26, 32 and 34, the glass element 26 is configured to propagate the stress wave as a result of impingement by a Nd-Yag laser beam directed in the first axis (See Col. 6, lines 19 - 23).

Regarding claims 4 and 15, the .stress wave has a length ranging from 5 nanoseconds to 1 microsecond (See Col. 6, lines 19 - 23 and Col. 8, lines 38 - 50).

Regarding claims 5 and 16, the stress wave comprises a rarefaction shock formation (See Col. 6, lines 31 - 53).

Regarding claims 6 and 17, the coating 32 has a thickness less than 0.5 um (See Col. 6, lines 54- 59).

Regarding claims 7 and 18, the glass element 26 is bonded to the second side of the substrate 30 (See Fig. 1).

Regarding claims 8, 19 and 27, the glass element 26 comprises quartz (See Col. 22, lines 30 - 48).

Regarding claims 9 and 20, the glass element 26 has a thickness ranging from 0.1mm to 5mm (See Col. 6, lines 40 - 43 and Col. 16, lines 56 - 64).

Regarding claim 10, the substrate 30 comprises silicon (See Col. 6, lines 54 - 59).

Regarding claims 11 and 21, the glass element 26 comprises a positioning constraining element (See Col. 6, lines 23 - 37 and lines 40- 43).

Regarding claims 12, 22, 28 and 33, an energy absorbing layer 28 is on the free side of the glass element 26 and the laser pulse is directed to the energy absorbing layer (See Col. 5, lines 49 - 53).

Regarding claims 23 and 24, the stress exceeds 1.0 and 2.0 Gpa (See Col. 17, lines 23 – 31, Col. 18, lines 66 - 68 and Col. 19, lines 33 - 54).

Regarding claim 29, a second substrate 2712 is located opposite the front side of the first substrate 2710 and receives the nanostructure are once separated from the first substrate (See Col. 25, lines 22 - 29).

Regarding claims 30 and 31, a second substrate 2712 is located opposite the first substrate 2710, the second substrate receives the nanostructure separated from the first substrate

and an adhesive is disposed on the second substrate (See Col. 25, lines 20 - 46).

Regarding claim 35, the silicon substrate 30 comprises a circuit 15, 46, 48 (See Col. 6, lines 60- 68 and Col. 7, lines 1 - 10 and lines 31 - 40).

Regarding claims 36 and 37, the substrate 30 comprises a polymer (See Col. 6, lines 54 – 59).

### *Response to Arguments*

3. Applicant's arguments filed 2/20/08 have been fully considered but they are not persuasive. In response to applicant's argument that the reference does not disclose a stress wave that propagates through a glass substrate, it is the examiner's position that in Gupta, the type and thickness of the constraining medium can be changed to optimize the stress generation conditions, wherein a solid water glass having a thickness is used in association with the energy absorbing film to generate a strong and sharp stress wave pulse and to increase the interface tensile stress in the constraining medium of the coating and substrate (See Col. 22, lines 60 – 65, Col. 23, lines 1 – 3, Col. 25, lines 38 – 51 and Col. 27, lines 29 – 35), thus the reference still stands.

**THIS ACTION IS MADE FINAL.** Applicant is reminded of the extension of time policy as set forth in 37 CFR 1.136(a).

A shortened statutory period for reply to this final action is set to expire THREE MONTHS from the mailing date of this action. In the event a first reply is filed within TWO MONTHS of the mailing date of this final action and the advisory action is not mailed until after the end of the THREE-MONTH shortened statutory period, then the shortened statutory period will expire on the date the advisory action is mailed, and any extension fee pursuant to 37 CFR 1.136(a) will be

calculated from the mailing date of the advisory action. In no event, however, will the statutory period for reply expire later than SIX MONTHS from the mailing date of this final action.

### *Conclusion*

4. Any inquiry concerning this communication or earlier communications from the examiner should be directed to Octavia Davis whose telephone number is 571-272-2176. The examiner can normally be reached on Mon through Thurs from 9 to 5. The examiner can also be reached on alternate Fridays.

If attempts to reach the examiner by telephone are unsuccessful, the examiner's supervisor, Edward Lefkowitz, can be reached on 571-272-2180. The fax phone number for the organization where this application or proceeding is assigned is 571-273-8300.

Information regarding the status of an application may be obtained from the Patent Application Information Retrieval (PAIR) system. Status information for published applications may be obtained from either Private PAIR or Public PAIR. Status information for unpublished applications is available through Private PAIR only. For more information about the PAIR system, see http://pair-direct.uspto.gov. Should you have questions on access to the Private PAIR system, contact the Electronic Business Center (EBC) at 866-217-9197 (toll-free).

/Edward Lefkowitz/

Supervisory Patent Examiner, Art Unit 2855

OD/2855

5/22/08

| Index of Claims | Application/Control No. | Applicant(s)/Patent Under Reexamination |
|---|---|---|
| | 11504981 | GUPTA ET AL. |
| | **Examiner** | **Art Unit** |
| | Davis, Octavia | 2855 |

| | | | | | | | |
|---|---|---|---|---|---|---|---|
| ✓ | Rejected | - | Cancelled | N | Non-Elected | A | Appeal |
| = | Allowed | ÷ | Restricted | I | Interference | O | Objected |

☐ Claims renumbered in the same order as presented by applicant ☐ CPA ☐ T.D. ☐ R.1.47

| CLAIM | | DATE | | | | | | | | |
|---|---|---|---|---|---|---|---|---|---|---|
| Final | Original | 11/24/2007 | | | | | | | | |
| | 1 | ✓ | | | | | | | | |
| | 2 | ✓ | | | | | | | | |
| | 3 | ✓ | | | | | | | | |
| | 4 | ✓ | | | | | | | | |
| | 5 | ✓ | | | | | | | | |
| | 6 | ✓ | | | | | | | | |
| | 7 | ✓ | | | | | | | | |
| | 8 | ✓ | | | | | | | | |
| | 9 | ✓ | | | | | | | | |
| | 10 | ✓ | | | | | | | | |
| | 11 | ✓ | | | | | | | | |
| | 12 | ✓ | | | | | | | | |
| | 13 | ✓ | | | | | | | | |
| | 14 | ✓ | | | | | | | | |
| | 15 | ✓ | | | | | | | | |
| | 16 | ✓ | | | | | | | | |
| | 17 | ✓ | | | | | | | | |
| | 18 | ✓ | | | | | | | | |
| | 19 | ✓ | | | | | | | | |
| | 20 | ✓ | | | | | | | | |
| | 21 | ✓ | | | | | | | | |
| | 22 | ✓ | | | | | | | | |
| | 23 | ✓ | | | | | | | | |
| | 24 | ✓ | | | | | | | | |
| | 25 | ✓ | | | | | | | | |
| | 26 | ✓ | | | | | | | | |
| | 27 | ✓ | | | | | | | | |
| | 28 | ✓ | | | | | | | | |
| | 29 | ✓ | | | | | | | | |
| | 30 | ✓ | | | | | | | | |
| | 31 | ✓ | | | | | | | | |
| | 32 | ✓ | | | | | | | | |
| | 33 | - | | | | | | | | |
| | 34 | ✓ | | | | | | | | |
| | 35 | ✓ | | | | | | | | |
| | 36 | ✓ | | | | | | | | |

| Index of Claims | Application/Control No. | Applicant(s)/Patent Under Reexamination |
|---|---|---|
| | 11504981 | GUPTA ET AL. |
| | **Examiner** | **Art Unit** |
| | Davis, Octavia | 2855 |

| | | | | | | | |
|---|---|---|---|---|---|---|---|
| ✓ | Rejected | - | Cancelled | N | Non-Elected | A | Appeal |
| = | Allowed | ÷ | Restricted | I | Interference | O | Objected |

☐ Claims renumbered in the same order as presented by applicant ☐ CPA ☐ T.D. ☐ R.1.47

| CLAIM | | DATE | | | | | | | | |
|---|---|---|---|---|---|---|---|---|---|---|
| Final | Original | 11/24/2007 | | | | | | | | |
| | 37 | ✓ | | | | | | | | |

| Search Notes | Application/Control No. | Applicant(s)/Patent Under Reexamination |
|---|---|---|
| | 11504981 | GUPTA ET AL. |
| | **Examiner** | **Art Unit** |
| | Davis, Octavia | 2855 |

## SEARCHED

| Class | Subclass | Date | Examiner |
|---|---|---|---|
| 73 | 777,862.49 | 5/21/08 | OD |

## SEARCH NOTES

| Search Notes | Date | Examiner |
|---|---|---|
| East Text Search | 5/21/08 | OD |

## INTERFERENCE SEARCH

| Class | Subclass | Date | Examiner |
|---|---|---|---|
| | | | |

EAST Search History

| Ref # | Hits | Search Query | DBs | Default Operator | Plurals | Time Stamp |
|---|---|---|---|---|---|---|
| L1 | 716 | 73/800.ccls. | US-PGPUB; USPAT; USOCR; FPRS; EPO; JPO; DERWENT; IBM_TDB | OR | ON | 2008/05/22 18:51 |
| L2 | 83 | 1 and (tensile) near3 (stress strain ) | US-PGPUB; USPAT; USOCR; FPRS; EPO; JPO; DERWENT; IBM_TDB | OR | ON | 2008/05/22 18:54 |
| L3 | 33 | 2 and (glass ) | US-PGPUB; USPAT; USOCR; FPRS; EPO; JPO; DERWENT; IBM_TDB | OR | ON | 2008/05/22 18:54 |
| L4 | 5317 | (tensile) near3 (stress strain ).clm. | US-PGPUB; USPAT; USOCR; FPRS; EPO; JPO; DERWENT; IBM_TDB | OR | ON | 2008/05/22 18:54 |
| L5 | 532 | 4 and (glass ).clm. | US-PGPUB; USPAT; USOCR; FPRS; EPO; JPO; DERWENT; IBM_TDB | OR | ON | 2008/05/22 18:54 |
| L6 | 111 | 5 and (laser ) | US-PGPUB; USPAT; USOCR; FPRS; EPO; JPO; DERWENT; IBM_TDB | OR | ON | 2008/05/22 18:55 |

| | | | | | | |
|---|---|---|---|---|---|---|
| L7 | 33 | 6 and (wave pulse ) | US-PGPUB; USPAT; USOCR; FPRS; EPO; JPO; DERWENT; IBM_TDB | OR | ON | 2008/05/22 18:56 |
| L8 | 19 | 7 and (energy ) | US-PGPUB; USPAT; USOCR; FPRS; EPO; JPO; DERWENT; IBM_TDB | OR | ON | 2008/05/22 18:57 |

5/ 22/ 08 6:57:51 PM

## IN THE UNITED STATES PATENT AND TRADEMARK OFFICE

| | | | |
|---|---|---|---|
| Appl. No. | : | 11/504,981 | Confirmation No.: 4584 |
| Applicant | : | VIJAY GUPTA | |
| Title | : | GLASS-MODIFIED STRESS WAVES FOR SEPARATION OF ULTRA THIN FILMS AND NANOELECTRONICS DEVICE FABRICATION | |
| Filed | : | 08/15/2006 | |
| TC/A.U. | : | 2855 | |
| Examiner | : | DAVIS, OCTAVIA L. | |
| Docket No. | : | UC03-126-2US | |
| Cust. No. | : | 8156 | |

**Mail Stop Amendment**
**Commissioner for Patents**
**P.O. Box 1450**
**Alexandria, VA 22313-1450**

## RESPONSE TO NON-FINAL OFFICE ACTION

Dear Sir:

In response to the Non-Final Office Action mailed on November 28, 2007, please amend the above-identified U.S. patent application as follows:

**Amendments to the Claims** are reflected in the listing of claims, which begins on page 2 of this paper.

**Remarks** begin on page 9 of this paper.


Boeing Ex. 1002, p. 69 of 177
Boeing v. Regents Univ. Cal.

**Amendments to the Claims:**

This listing of claims will replace all prior versions, and listings, of claims in the application:

**Listing of Claims:**

1. (original): An apparatus for generating a tensile stress between a substrate and a coating, comprising:

a substrate having a thickness, said thickness defined by a first side and a second side in a first axis;

a coating applied to the first side of the substrate such that the coating and substrate are axially spaced along the first axis in intimate facing contact with each other such to form a coating/substrate interface; and

a glass element disposed on the second side of the substrate and axially spaced along the first axis;

wherein the glass element is configured to propagate a stress wave to the coating/substrate interface to generate a tensile stress between the substrate and the coating.

2. (original): An apparatus as recited in claim 1, wherein the tensile stress is configured to separate the coating from the substrate at the coating/substrate interface.

3. (original): An apparatus as recited in claim 1, wherein the glass is configured to propagate the stress wave as a result of impingement by a Nd-Yag laser beam directed in the first axis.

4. (original): An apparatus as recited in claim 1, wherein the stress wave has a length ranging from approximately 5 nanoseconds to approximately 1 microsecond.

5. (original): An apparatus as recited in claim 4, wherein the stress wave comprises a rarefaction shock formation.

6. (original): An apparatus as recited in claim 1, wherein the coating has a thickness less than approximately 0.5 μm.

7. (original): An apparatus as recited in claim 1, wherein the glass element is bonded to the second side of the substrate.

8. (original): An apparatus as recited in claim 1, wherein the glass element comprises one of the following: Pyrex, sodalime, quartz, or borosilicate.

9. (original): An apparatus as recited in claim 1, wherein the glass element has a thickness ranging from approximately 0.1 mm to approximately 5 mm.

10. (original): An apparatus as recited in claim 1, wherein the substrate comprises silicon.

11. (original): An apparatus as recited in claim 1, further comprising a constraining element disposed adjacent to the glass element.

12. (original): An apparatus as recited in claim 11, further comprising an energy absorbing layer disposed between the constraining layer and the glass element.

13. (original): A method for separating a coating from a substrate, the substrate having a first side and a second side transversely disposed in a first axis, the coating applied to the first side of the substrate such that the coating and substrate are axially spaced along the first axis in intimate facing contact to form a coating/substrate interface, the method comprising:

positioning a glass element along the first axis on the second side of the substrate;

directing a laser pulse in the first axis at the glass element;

propagating a stress wave through the glass element to the coating/substrate interface to generate a tensile force between the substrate and the coating; and

separating the coating from the substrate as a result of the stress wave-generated tensile force.

14. (original): A method as recited in claim 13, wherein directing a laser pulse in the first axis comprises directing a Nd-Yag laser beam in the first axis.

15. (original): A method as recited in claim 13, wherein propagating a stress wave comprises propagating a stress wave having a length ranging from approximately 5 nanoseconds to approximately 1 microsecond.

16. (original): A method as recited in claim 15, wherein the stress wave comprises a rarefaction shock formation.

17. (original): A method as recited in claim 15, wherein the stress wave is configured to separate a coating having a thickness less than approximately 0.5 μm.

18. (original): A method as recited in claim 15, wherein positioning a glass element along the first axis comprises bonding the glass element to the second side of

the substrate.

19. (original): A method as recited in claim 13, wherein the glass element comprises one of the following: Pyrex, sodalime, quartz, or borosilicate.

20. (original): A method as recited in claim 19, wherein the glass element has a thickness ranging from approximately 0.1 mm to approximately 5 mm.

21. (original): A method as recited in claim 13, further comprising positioning a constraining element adjacent to a free side of the glass element.

22. (original): A method as recited in claim 21, further comprising:

coating an energy absorbing layer on the free side of the glass element between the constraining layer and the glass element;

wherein directing a laser pulse in the first axis comprises directing the laser pulse the energy absorbing layer coated on the glass element.

23. (original): A method as recited in claim 13, wherein the stress generated by the stress wave at the coating/substrate interface exceeds approximately 1.0 GPa.

24. (original): A method as recited in claim 23, wherein the stress generated by the stress wave at the coating/substrate interface exceeds approximately 2.0 GPa.

25. (original): An apparatus for separating a nanostructure from a first substrate, the nanostructure attached to a front side of the first substrate, comprising:

a glass element disposed on a back side of the first substrate opposite the nanostructure; and

a laser source configured to direct a laser beam at the glass element;

wherein the glass element is configured to propagate a stress wave to the nanostructure as a result of impingement by the laser beam to generate a tensile stress between the nanostructure and the first substrate to separate the nanostructure from the first substrate.

26. (original): An apparatus as recited in claim 25, wherein the laser source comprises a Nd-Yag laser.

27. (original): An apparatus as recited in claim 25, wherein the glass element comprises one of the following: Pyrex, sodalime, quartz, or borosilicate.

28. (original): An apparatus as recited in claim 25, further comprising an energy absorbing layer disposed between the constraining layer and the glass element.

29. (original): An apparatus as recited in claim 25, further comprising:

a second substrate located opposite the front side of the first substrate;

wherein the second substrate is configured to receive the nanostructure once separated from the first substrate.

30. (original): An apparatus as recited in claim 29, further comprising:

an adhesive layer disposed on the second substrate;

wherein the adhesive layer is configured to form a bond between the nanostructure and the second substrate.

31. (original): An apparatus as recited in claim 29, further comprising one or more spacers separating the first substrate from the second substrate.

32. (currently amended): An apparatus for transferring a silicon platform to a receiving substrate, comprising:

a glass substrate disposed on a back side of the silicon platform; [[and]]

a laser source configured to direct a laser beam at the glass element;

wherein the glass element is configured to generate a tensile stress between the silicon platform and the glass substrate as a result of impingement by the laser beam; and

wherein said tensile stress is configured to launch the silicon platform to the receiving substrate; and

an energy absorbing layer adjacent the glass substrate opposite from the silicon platform;

wherein the energy absorbing layer and the glass substrate are configured to propagate a stress wave across the glass substrate to generate the tensile stress between the silicon platform and the glass substrate.

33. (cancelled)

34. (original): An apparatus as recited in claim 32, wherein the laser beam passes through the glass substrate to generate the tensile stress between the silicon platform and the glass substrate.

35. (previously presented): An apparatus as recited in claim 32, wherein the silicon platform comprises one or more circuits.

36. (previously presented): An apparatus as recited in claim 32, wherein the receiving substrate comprises a polymer.

37. (previously presented): An apparatus as recited in claim 36, wherein the receiving substrate is spun coated with a polymer film.

## REMARKS/ARGUMENTS

This Response is submitted in response to a Non-Final Office Action mailed on November 28, 2007, in which Claims 1-37 were pending, all of which were rejected. All rejections are respectfully traversed, and reconsideration is hereby requested.

Applicant, in the instant application, has made subtle changes over Applicant's cited prior art in US Patent number 5,438,402 (the '402 patent) that may not at first be readily appreciable, but nonetheless are substantial with great utility.

In order to set the stage for Applicant's arguments, it is first important to understand a key concept of high amplitude stress waves propagated through glass-like materials.

Glass-Modified Stress Waves

The glass stress wave modification element is particularly important to this invention, as it has been found that with sufficiently high pulse pressures, glass materials tend to modify an input stress wave to where it has a virtually instantaneous post-peak drop time, resulting in a "rarefaction shock".

It is believed that this behavior results from certain glass-like materials being "anomalous materials", which, with sufficiently high pressure stress waves with a short enough duration, enters a regime of stress wave propagation where the velocity of the stress wave decreases with increasing pressure. This property has the effect of compressing the tail end of a propagated shock, resulting in a "rarefied shock" pulse tail.

In the application paragraph [0073], the properties of glass are explained:

> "[0073] FIGS. 5A and 5B shows a series of stress pulse profiles with increasing laser fluence, measured with a glass substrate element 108 comprising soda lime glass. As illustrated in FIG. 5A, at low stress amplitudes, the profiles are similar to that in Si and other materials, having a finite rise-time and gradual post-peak decay. However, as the stress

pulse amplitude exceeds a certain threshold, the rise-time of the stress wave 120 gets longer but the post-peak stress profile starts 122 to decay rather quickly. Ultimately, a profile is attained with the post-peak stress dropping virtually instantaneously (the drop time is within the resolution limit of our instrumentation), much like a 'rarefaction shock.' The modification in the stress wave profile as a result of the glass substrate element sample assembly 100 compared with a sample assembly having only a Si substrate is shown in FIG. 5B." (Underline added)

The "rarefaction shock" is important because it allows for the generation of controlled tension stresses in films of arbitrarily small thicknesses, useful for removing the films from the substrate through spallation:

"[0067] ... if the post-peak decay time is reduced to zero, i.e. the wave profile has a "rarefaction shock," then the interface tensile stress for a film of arbitrarily small thickness theoretically will equal the amplitude of the incoming compression pulse. In accordance with the present invention, this theoretical possibility has been realized experimentally with sample assemblies using glass layers.." (Underline added)

Since arbitrarily small thicknesses may now be used, arbitrarily thin films on substrate surfaces may be detached by exceeding the interface tensile stress limit between the film and the substrate to which it is attached. Of course, if the interface tensile stress limit exceeds the bulk substrate tensile stress limit, the substrate itself will likely fracture first.

Now that the importance of the glass element being configured to propagate a stress wave to the coating/substrate interface to generate a tensile stress between the

substrate and the coating, we may better review the specific claim rejections.

1. Claim Rejections under 35 U.S.C. 102(b)

The Examiner alleges a rejection of Claims 1-37 under 35 U.S.C. 102(b) as being anticipated by Gupta in US Patent number 5,438,402 (the '402 patent). Applicant respectfully traverses these rejections, and kindly requests reconsideration of all claims pursuant to the arguments presented below.

Claim 1

The Examiner rejects claim 1 as being anticipated by Gupta, citing "Col. 5, lines 40-58, Col. 6, lines 28-43 and Col. 12, lines 34-43." This citation of support is vague in that there is no specific citation of what element in the '402 patent provides for "the glass element 26 propagating a stress wave to the coating and substrate".

To clarify Applicant's arguments traversing this independent claim, please refer to the two drawings on page 16 of this paper.

In AMENDMENT FIG. 1, which is an annotated FIG. 4 from the present application, one sees an important principle of operation in this invention, which is that the stress wave propagates through a glass substrate, rather than merely using a glass substrate as a confinement for generating a wave launched directly into a substrate. Claim 1 of the instant application reads as follows, with parentheses surrounded added comments for clarity:

Claim 1. An apparatus for generating a tensile stress between a substrate and a coating, comprising:

a substrate (108) having a thickness, said thickness defined by a first side (First Side) and a second side (Second Side) in a first axis (Parallel to the Nd-YAG Laser Pulse, 114);

a coating (Coating 110) applied to the first side (First Side) of the substrate (108) such that the coating (110) and substrate (108) are axially spaced along the first axis (parallel to 114) in intimate facing contact with each other such to form a coating/substrate interface (at the first side surface); and

a glass element (Glass Substrate 106) disposed on the second side (Second Side) of the substrate (108) and axially spaced along the first axis (parallel to 114);

wherein the glass element (106) is configured to propagate a stress wave to the coating/substrate (at the First Side) interface to generate a tensile stress between the substrate (108) and the coating (110).

In short, the stress wave is generated at the "energy-absorbing aluminum layer 104", and traverses through glass substrate 106, where it transmits through the substrate 108 until it a rarefaction shock is "transmitted into the coating 110 to from a tension pulse" (from paragraph [0069]). Here, the stress wave has already been generated by the laser pulse at the aluminum layer 104, so the glass medium 106 is used to modify the stress wave as it propagates through the glass layer 106. After the wave has been modified by the glass substrate (into a rarefaction shock) it is transmitted through the substrate 108 to coating 110. This mechanism is in contrast to that shown in Gupta's '402 patent where there is no stress wave modifying glass, therefore no rarefaction shock, and the stress wave generated at the aluminum film 28 is directly transmitted through the substrate to the substrate coating 32.

AMENDMENT FIG. 2, which is an annotated portion of Gupta's FIG. 2 from the '402 patent, exhibits the following geometry, best described by:

"The constraining material is generally transparent to the input laser pulse

thereby transferring the pulse to the energy absorbing layer 28. Absorption of the laser pulse by the energy absorbing layer leads to a sudden expansion of the layer 28 which, due to the axial constraints of the assembly, e.g., the constraining material 26 and the substrate 30, generates a compressive shock wave or pulse directed towards the substrate 30 and the coating 32." (US 5,438,402 patent, col. 6, lines 28-31, bold added)

In AMENDMENT FIG.2, the constraining material (26) is "generally transparent" to the input laser pulse. Thus, no energy is transferred to the constraining material, which is transparency to the Nd-YAG frequencies. Since no energy is transferred, there can be no stress wave generation, therefore, there can be no propagation of the stress wave through the constraining material at this point.

The Nd-YAG pulse laser energy is ultimately absorbed by the "energy absorbing film 28", which is constrained by the "constraining material 26", thereby generating a compressive pulse. This "compressive shock wave or pulse (is) directed towards the substrate 30 and the coating 32". (Comment added for clarity) There is no stress wave glass-modifying element in the taught construction of the '402 patent, even though there may be glass present.

Therefore, there is no teaching in the '402 patent of glass-modification of a stress wave to produce a rarefaction shock. Further, since the energy absorption surface is reached only after the laser pulse has traversed the "constraining material 26", there can never be stress wave modification by propagation through the glass element.

Since the '402 reference fails to teach the claim limitation of a "glass element ... configured to propagate a stress wave to the coating/substrate interface to generate a tensile stress between the substrate and the coating", then the Gupta '402 reference fails to be a suitable 30 U.S.C. 102(b) reference, failing to teach each and every element and limitation of Claim 1, and is thereby patentably distinct.

Claims 2-12

As dependent claim inherit all of the dependencies in their chain of dependencies, dependent Claims 2-12 are also patentably distinct from the Gupta '402 reference based on the same reasoning above.

Claims 13 and 14-24

Claim 13 contains the limitation: "...propagating a stress wave through the glass element to the coating/substrate interface to generate a tensile force between the substrate and the coating; and separating the coating from the substrate as a result of the stress wave-generated tensile force." (Underline added)

The arguments presented above for Claim 1 are hereby incorporated, and are equally applicable. Thus, it is respectfully submitted that Claim 13, and dependent Claims 14-24, are all patentably distinct from the Gupta '402 reference.

Claims 25 and 26-31

Claim 25 contains the limitation: "...the glass element is configured to propagate a stress wave to the nanostructure as a result of impingement by the laser beam to generate a tensile stress between the nanostructure and the first substrate to separate the nanostructure from the first substrate." (Underline added)

The arguments presented above for Claim 1 are hereby incorporated, and are equally applicable. Thus, it is respectfully submitted that Claim 25, and dependent Claims 26-31, are all patentably distinct from the Gupta '402 reference.

Claims 32 and 34-37

Claim 32, as amended, now contains the limitation: "...an energy absorbing layer adjacent the glass substrate opposite from the silicon platform; wherein the energy absorbing layer and the glass substrate are configured to propagate a stress wave across the glass substrate to generate the tensile stress between the silicon platform

and the glass substrate." (Underline added)

The arguments presented above for Claim 1 are hereby incorporated, and are equally applicable.

The Claim 33 limitations have been incorporated into Claim 32, therefore Claim 33 is now cancelled. It is respectfully submitted that Claim 32, and dependent Claims 34-37, are all patentably distinct from the Gupta '402 reference.

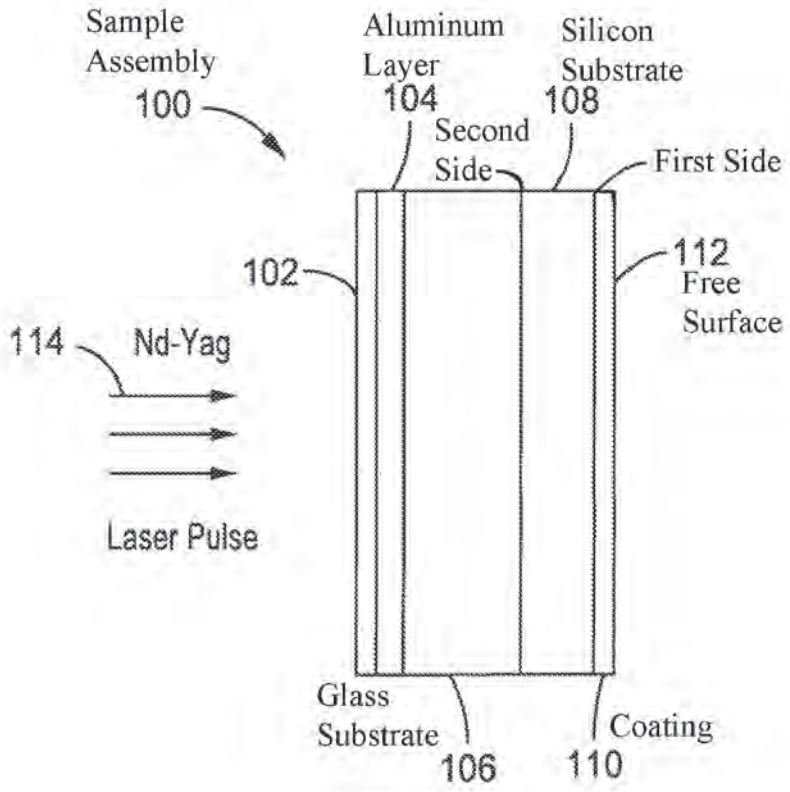


AMENDMENT FIG. 1
(From US 2007/0039395 FIG. 4)

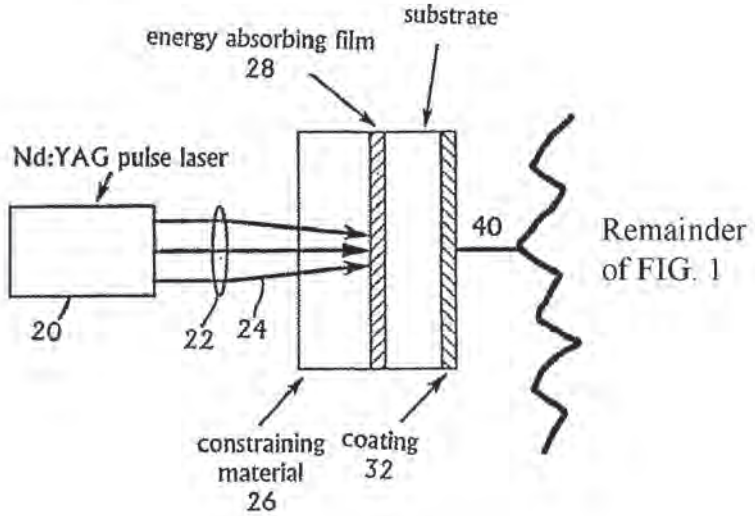


AMENDMENT FIG. 2
(From US 5,438,402 FIG.1)

2. Conclusion

Based on the foregoing, Applicants respectfully request that the various grounds for rejection in the Office Action be reconsidered and withdrawn with respect to the presently amended form of the claims, and that a Notice of Allowance be issued for the present application to pass to issuance.

In the event any further matters remain at issue with respect to the present application, Applicants respectfully request that the Examiner please contact the undersigned below at the telephone number indicated in order to discuss such matter prior to the next action on the merits of this application.

Date: February 20, 2008

Respectfully submitted,

John P. O'Banion, Reg. No. 33,201
Joseph R. Milner, Reg. No. 42,896
M. Robyn Carrillo, Reg. No. 47,474
O'BANION & RITCHEY LLP
400 Capitol Mall, Suite 1550
Sacramento, CA 95814
(916) 498-1010

# Electronic Acknowledgement Receipt

| | |
|---|---|
| **EFS ID:** | 2884785 |
| **Application Number:** | 11504981 |
| **International Application Number:** | |
| **Confirmation Number:** | 4584 |
| **Title of Invention:** | Glass-modified stress waves for separation of ultra thin films and nanoelectronics device fabrication |
| **First Named Inventor/Applicant Name:** | Vijay Gupta |
| **Customer Number:** | 8156 |
| **Filer:** | M. Robyn Carrillo |
| **Filer Authorized By:** | |
| **Attorney Docket Number:** | UC03-126-2US |
| **Receipt Date:** | 20-FEB-2008 |
| **Filing Date:** | 15-AUG-2006 |
| **Time Stamp:** | 13:57:16 |
| **Application Type:** | Utility under 35 USC 111(a) |

## Payment information:

| | |
|---|---|
| Submitted with Payment | no |

## File Listing:

| Document Number | Document Description | File Name | File Size(Bytes) /Message Digest | Multi Part /.zip | Pages (if appl.) |
|---|---|---|---|---|---|
| 1 | | UC03_126_2US_response_to_112807_OA.pdf | 329801<br>29f6719599fdb4c62763f77b1b3e609c6c4d2a0f | yes | 17 |

| | Multipart Description/PDF files in .zip description | | |
|---|---|---|---|
| | **Document Description** | **Start** | **End** |
| | Amendment - After Non-Final Rejection | 1 | 1 |
| | Claims | 2 | 8 |
| | Applicant Arguments/Remarks Made in an Amendment | 9 | 17 |

| | |
|---|---|
| **Warnings:** | |
| **Information:** | |
| **Total Files Size (in bytes):** | 329801 |

**This Acknowledgement Receipt evidences receipt on the noted date by the USPTO of the indicated documents, characterized by the applicant, and including page counts, where applicable. It serves as evidence of receipt similar to a Post Card, as described in MPEP 503.**

**New Applications Under 35 U.S.C. 111**
**If a new application is being filed and the application includes the necessary components for a filing date (see 37 CFR 1.53(b)-(d) and MPEP 506), a Filing Receipt (37 CFR 1.54) will be issued in due course and the date shown on this Acknowledgement Receipt will establish the filing date of the application.**

**National Stage of an International Application under 35 U.S.C. 371**
**If a timely submission to enter the national stage of an international application is compliant with the conditions of 35 U.S.C. 371 and other applicable requirements a Form PCT/DO/EO/903 indicating acceptance of the application as a national stage submission under 35 U.S.C. 371 will be issued in addition to the Filing Receipt, in due course.**

**New International Application Filed with the USPTO as a Receiving Office**
**If a new international application is being filed and the international application includes the necessary components for an international filing date (see PCT Article 11 and MPEP 1810), a Notification of the International Application Number and of the International Filing Date (Form PCT/RO/105) will be issued in due course, subject to prescriptions concerning national security, and the date shown on this Acknowledgement Receipt will establish the international filing date of the application.**

PTO/SB/06 (07-06)
Approved for use through 1/31/2007. OMB 0651-0032
U.S. Patent and Trademark Office; U.S. DEPARTMENT OF COMMERCE
Under the Paperwork Reduction Act of 1995, no persons are required to respond to a collection of information unless it displays a valid OMB control number.

# PATENT APPLICATION FEE DETERMINATION RECORD

Substitute for Form PTO-875

| Application or Docket Number | Filing Date | |
|---|---|---|
| 11/504,981 | 08/15/2006 | ☐ To be Mailed |

## APPLICATION AS FILED – PART I

| FOR | (Column 1) NUMBER FILED | (Column 2) NUMBER EXTRA | SMALL ENTITY ☒ RATE ($) | SMALL ENTITY ☒ FEE ($) | OR | OTHER THAN SMALL ENTITY RATE ($) | OTHER THAN SMALL ENTITY FEE ($) |
|---|---|---|---|---|---|---|---|
| ☐ BASIC FEE (37 CFR 1.16(a), (b), or (c)) | N/A | N/A | N/A | | | N/A | |
| ☐ SEARCH FEE (37 CFR 1.16(k), (i), or (m)) | N/A | N/A | N/A | | | N/A | |
| ☐ EXAMINATION FEE (37 CFR 1.16(o), (p), or (q)) | N/A | N/A | N/A | | | N/A | |
| TOTAL CLAIMS (37 CFR 1.16(i)) | minus 20 = | * | X $ = | | OR | X $ = | |
| INDEPENDENT CLAIMS (37 CFR 1.16(h)) | minus 3 = | * | X $ = | | | X $ = | |
| ☐ APPLICATION SIZE FEE (37 CFR 1.16(s)) | If the specification and drawings exceed 100 sheets of paper, the application size fee due is $250 ($125 for small entity) for each additional 50 sheets or fraction thereof. See 35 U.S.C. 41(a)(1)(G) and 37 CFR 1.16(s). | | | | | | |
| ☐ MULTIPLE DEPENDENT CLAIM PRESENT (37 CFR 1.16(j)) | | | | | | | |
| | | | TOTAL | | | TOTAL | |

* If the difference in column 1 is less than zero, enter "0" in column 2.

## APPLICATION AS AMENDED – PART II

| AMENDMENT 02/20/2008 | (Column 1) CLAIMS REMAINING AFTER AMENDMENT | | (Column 2) HIGHEST NUMBER PREVIOUSLY PAID FOR | (Column 3) PRESENT EXTRA | SMALL ENTITY RATE ($) | SMALL ENTITY ADDITIONAL FEE ($) | OR | OTHER THAN SMALL ENTITY RATE ($) | OTHER THAN SMALL ENTITY ADDITIONAL FEE ($) |
|---|---|---|---|---|---|---|---|---|---|
| Total (37 CFR 1.16(i)) | * 36 | Minus | ** 37 | = 0 | X $25 = | 0 | OR | X $ = | |
| Independent (37 CFR 1.16(h)) | * 4 | Minus | ***4 | = 0 | X $105 = | 0 | OR | X $ = | |
| ☐ Application Size Fee (37 CFR 1.16(s)) | | | | | | | | | |
| ☐ FIRST PRESENTATION OF MULTIPLE DEPENDENT CLAIM (37 CFR 1.16(j)) | | | | | | | OR | | |
| | | | | | TOTAL ADD'L FEE | 0 | OR | TOTAL ADD'L FEE | |

| AMENDMENT | (Column 1) CLAIMS REMAINING AFTER AMENDMENT | | (Column 2) HIGHEST NUMBER PREVIOUSLY PAID FOR | (Column 3) PRESENT EXTRA | RATE ($) | ADDITIONAL FEE ($) | | RATE ($) | ADDITIONAL FEE ($) |
|---|---|---|---|---|---|---|---|---|---|
| Total (37 CFR 1.16(i)) | * | Minus | ** | = | X $ = | | OR | X $ = | |
| Independent (37 CFR 1.16(h)) | * | Minus | *** | = | X $ = | | OR | X $ = | |
| ☐ Application Size Fee (37 CFR 1.16(s)) | | | | | | | | | |
| ☐ FIRST PRESENTATION OF MULTIPLE DEPENDENT CLAIM (37 CFR 1.16(j)) | | | | | | | OR | | |
| | | | | | TOTAL ADD'L FEE | | OR | TOTAL ADD'L FEE | |

* If the entry in column 1 is less than the entry in column 2, write "0" in column 3.

** If the "Highest Number Previously Paid For" IN THIS SPACE is less than 20, enter "20".

*** If the "Highest Number Previously Paid For" IN THIS SPACE is less than 3, enter "3".

The "Highest Number Previously Paid For" (Total or Independent) is the highest number found in the appropriate box in column 1.

Legal Instrument Examiner:
/CRYSTAL QUEEN/

This collection of information is required by 37 CFR 1.16. The information is required to obtain or retain a benefit by the public which is to file (and by the USPTO to process) an application. Confidentiality is governed by 35 U.S.C. 122 and 37 CFR 1.14. This collection is estimated to take 12 minutes to complete, including gathering, preparing, and submitting the completed application form to the USPTO. Time will vary depending upon the individual case. Any comments on the amount of time you require to complete this form and/or suggestions for reducing this burden, should be sent to the Chief Information Officer, U.S. Patent and Trademark Office, U.S. Department of Commerce, P.O. Box 1450, Alexandria, VA 22313-1450. DO NOT SEND FEES OR COMPLETED FORMS TO THIS ADDRESS. **SEND TO: Commissioner for Patents, P.O. Box 1450, Alexandria, VA 22313-1450.**

*If you need assistance in completing the form, call 1-800-PTO-9199 and select option 2.*

UNITED STATES PATENT AND TRADEMARK OFFICE

H.D

UNITED STATES DEPARTMENT OF COMMERCE
United States Patent and Trademark Office
Address: COMMISSIONER FOR PATENTS
P.O. Box 1450
Alexandria, Virginia 22313-1450
www.uspto.gov

| APPLICATION NO. | FILING DATE | FIRST NAMED INVENTOR | ATTORNEY DOCKET NO. | CONFIRMATION NO. |
|---|---|---|---|---|
| 11/504,981 | 08/15/2006 | Vijay Gupta | UC03-126-2US | 4584 |

8156 7590 11/28/2007
JOHN P. O'BANION
O'BANION & RITCHEY LLP
400 CAPITOL MALL SUITE 1550
SACRAMENTO, CA 95814

| EXAMINER |
|---|
| DAVIS, OCTAVIA L |

| ART UNIT | PAPER NUMBER |
|---|---|
| 2855 | |

| MAIL DATE | DELIVERY MODE |
|---|---|
| 11/28/2007 | PAPER |

**Please find below and/or attached an Office communication concerning this application or proceeding.**

The time period for reply, if any, is set in the attached communication.

| Office Action Summary | Application No. | Applicant(s) | |
|---|---|---|---|
| | 11/504,981 | GUPTA ET AL. | |
| | Examiner | Art Unit | |
| | Octavia Davis | 2855 | |

*-- The MAILING DATE of this communication appears on the cover sheet with the correspondence address --*

**Period for Reply**

A SHORTENED STATUTORY PERIOD FOR REPLY IS SET TO EXPIRE 3 MONTH(S) OR THIRTY (30) DAYS, WHICHEVER IS LONGER, FROM THE MAILING DATE OF THIS COMMUNICATION.

- Extensions of time may be available under the provisions of 37 CFR 1.136(a). In no event, however, may a reply be timely filed after SIX (6) MONTHS from the mailing date of this communication.
- If NO period for reply is specified above, the maximum statutory period will apply and will expire SIX (6) MONTHS from the mailing date of this communication.
- Failure to reply within the set or extended period for reply will, by statute, cause the application to become ABANDONED (35 U.S.C. § 133). Any reply received by the Office later than three months after the mailing date of this communication, even if timely filed, may reduce any earned patent term adjustment. See 37 CFR 1.704(b).

**Status**

1)☐ Responsive to communication(s) filed on _____.

2a)☐ This action is **FINAL**. 2b)☒ This action is non-final.

3)☐ Since this application is in condition for allowance except for formal matters, prosecution as to the merits is closed in accordance with the practice under *Ex parte Quayle*, 1935 C.D. 11, 453 O.G. 213.

**Disposition of Claims**

4)☒ Claim(s) 1-37 is/are pending in the application.

4a) Of the above claim(s) _____ is/are withdrawn from consideration.

5)☐ Claim(s) _____ is/are allowed.

6)☒ Claim(s) 1-37 is/are rejected.

7)☐ Claim(s) _____ is/are objected to.

8)☐ Claim(s) _____ are subject to restriction and/or election requirement.

**Application Papers**

9)☐ The specification is objected to by the Examiner.

10)☒ The drawing(s) filed on 8/15/06 is/are: a)☒ accepted or b)☐ objected to by the Examiner.

Applicant may not request that any objection to the drawing(s) be held in abeyance. See 37 CFR 1.85(a).

Replacement drawing sheet(s) including the correction is required if the drawing(s) is objected to. See 37 CFR 1.121(d).

11)☐ The oath or declaration is objected to by the Examiner. Note the attached Office Action or form PTO-152.

**Priority under 35 U.S.C. § 119**

12)☐ Acknowledgment is made of a claim for foreign priority under 35 U.S.C. § 119(a)-(d) or (f).

a)☐ All b)☐ Some * c)☐ None of:

1.☐ Certified copies of the priority documents have been received.

2.☐ Certified copies of the priority documents have been received in Application No. _____.

3.☐ Copies of the certified copies of the priority documents have been received in this National Stage application from the International Bureau (PCT Rule 17.2(a)).

* See the attached detailed Office action for a list of the certified copies not received.

**Attachment(s)**

1) ☒ Notice of References Cited (PTO-892)

2) ☐ Notice of Draftsperson's Patent Drawing Review (PTO-948)

3) ☒ Information Disclosure Statement(s) (PTO/SB/08) Paper No(s)/Mail Date 8/15/06.

4) ☐ Interview Summary (PTO-413) Paper No(s)/Mail Date. _____.

5) ☐ Notice of Informal Patent Application

6) ☐ Other: _____.



Boeing Ex. 1002, p. 90 of 177
Boeing v. Regents Univ. Cal.

## DETAILED ACTION

### *Claim Rejections - 35 USC § 102*

1. The following is a quotation of the appropriate paragraphs of 35 U.S.C. 102 that form the basis for the rejections under this section made in this Office action:

> A person shall be entitled to a patent unless –
>
> (b) the invention was patented or described in a printed publication in this or a foreign country or in public use or on sale in this country, more than one year prior to the date of application for patent in the United States.

2. Claims 1 - 37 are rejected under 35 U.S.C. 102(b) as being anticipated by Gupta (5,438,402).

Regarding claim 1, Gupta discloses a system and method for measuring the interface tensile strength of planar interfaces comprising a substrate 30 having a thickness, said thickness defined by a first side and a second side in a first axis, a coating 32 applied to the first side such that the coating and substrate are axially spaced along the first axis in intimate facing contact with each other and a glass element 26 disposed on the second side of the substrate and axially spaced along the first axis, the glass element propagating a stress wave to the coating and substrate (See Col. 5, lines 40 – 58, Col. 6, lines 28 – 43 and Col. 12, lines 34 – 43).

Regarding claim 2, the tensile stress separates the coating 32 from the substrate 30 at the interface (See Col. 6, lines 43 - 54).

Regarding claims 3, 13, 14, 25, 26, 32 and 34, the glass element 26 is configured to propagate the stress wave as a result of impingement by a Nd-Yag laser beam directed in the first axis (See Col. 6, lines 19 - 23).

Regarding claims 4 and 15, the stress wave has a length ranging from 5 nanoseconds to 1 microsecond (See Col. 6, lines 19 – 23 and Col. 8, lines 38 - 50).

Regarding claims 5 and 16, the stress wave comprises a rarefaction shock formation (See Col. 6, lines 31 - 53).

Regarding claims 6 and 17, the coating 32 has a thickness less than 0.5 um (See Col. 6, lines 54 - 59).

Regarding claims 7 and 18, the glass element 26 is bonded to the second side of the substrate 30 (See Fig. 1).

Regarding claims 8, 19 and 27, the glass element 26 comprises quartz (See Col. 22, lines 30 - 48).

Regarding claims 9 and 20, the glass element 26 has a thickness ranging from 0.1mm to 5mm (See Col. 6, lines 40 – 43 and Col. 16, lines 56 - 64).

Regarding claim 10, the substrate 30 comprises silicon (See Col. 6, lines 54 - 59).

Regarding claims 11 and 21, the glass element 26 comprises a positioning constraining element (See Col. 6, lines 23 – 37 and lines 40- 43).

Regarding claims 12, 22, 28 and 33, an energy absorbing layer 28 is on the free side of the glass element 26 and the laser pulse is directed to the energy absorbing layer (See Col. 5, lines 49 – 53).

Regarding claims 23 and 24, the stress exceeds 1.0 and 2.0 Gpa (See Col. 17, lines 23 - 31, Col. 18, lines 66 - 68 and Col. 19, lines 33 - 54).

Regarding claim 29, a second substrate 2712 is located opposite the front side of the first substrate 2710 and receives the nanostructure once separated from the first substrate (See Col. 25, lines 22 – 29).

Regarding claims 30 and 31, a second substrate 2712 is located opposite the first substrate

2710, the second substrate receives the nanostructure separated from the first substrate and an adhesive is disposed on the second substrate (See Col. 25, lines 20 - 46).

Regarding claim 35, the silicon substrate 30 comprises a circuit 15, 46, 48 (See Col. 6, lines 60- 68 and Col. 7, lines 1 - 10 and lines 31 - 40).

Regarding claims 36 and 37, the substrate 30 comprises a polymer (See Col. 6, lines 54 - 59).

## *Conclusion*

3. The prior art made of record and not relied upon is considered pertinent to applicant's disclosure.

Kishii (4,353,649) discloses an apparatus for surface stress measurement of a glass coating and a transparent plastic product.

Pechersky (5,920,017) discloses a thermal input control and enhancement for laser based residual stress measurements using liquid temperature indicating coatings.

Ifju et al (6,327,030) disclose a system, method and coating for strain analysis.

Ferguson (5,199,304) discloses an apparatus for optically measuring specimen deformation during material testing.

Lesniak (6,219,139) discloses a full field photoelastic stress analysis.

4. Any inquiry concerning this communication or earlier communications from the examiner should be directed to Octavia Davis whose telephone number is 571-272-2176. The examiner can normally be reached on Mon through Thurs from 9 to 5. The examiner can also be reached on alternate Fridays.

If attempts to reach the examiner by telephone are unsuccessful, the examiner's supervisor, Edward Lefkowitz, can be reached on 571-272-2180. The fax phone number for the organization where this application or proceeding is assigned is 571-273-8300.

Information regarding the status of an application may be obtained from the Patent Application Information Retrieval (PAIR) system. Status information for published applications may be obtained from either Private PAIR or Public PAIR. Status information for unpublished applications is available through Private PAIR only. For more information about the PAIR system, see http://pair-direct.uspto.gov. Should you have questions on access to the Private PAIR system, contact the Electronic Business Center (EBC) at 866-217-9197 (toll-free).

Octavia Davis

OD/2855

11/21/07

EDWARD LEFKOWITZ
SUPERVISORY PATENT EXAMINER
TECHNOLOGY CENTER 2800

PTO/SB/08A (08-03)
Approved for use through 07/31/2006. OMB 0651-0031
U.S. Patent and Trademark Office; U.S. DEPARTMENT OF COMMERCE
Under the Paperwork Reduction Act of 1995, no persons are required to respond to a collection of information unless it contains a valid OMB control number.

Substitute for form 1449/PTO

# INFORMATION DISCLOSURE STATEMENT BY APPLICANT

*(Use as many sheets as necessary)*

Sheet 1 of 1

| Complete if Known | |
|---|---|
| Application Number | 11/504,981 |
| Filing Date | |
| First Named Inventor | VIJAY GUPTA |
| Art Unit | |
| Examiner Name | O. Davis |
| Attorney Docket Number | UC03-126-2US |

**U. S. PATENT DOCUMENTS**

| Examiner Initials* | Cite No.[1] | Document Number Number-Kind Code[2] (if known) | Publication Date MM-DD-YYYY | Name of Patentee or Applicant of Cited Document | Pages, Columns, Lines, Where Relevant Passages or Relevant Figures Appear |
|---|---|---|---|---|---|
| /OD/ | | US- 5,438,402 A | 08-07-1995 | Gupta | |
| | | US- | | | |
| | | US- | | | |
| | | US- | | | |
| | | US- | | | |
| | | US- | | | |
| | | US- | | | |
| | | US- | | | |
| | | US- | | | |
| | | US- | | | |
| | | US- | | | |
| | | US- | | | |
| | | US- | | | |
| | | US- | | | |
| | | US- | | | |
| | | US- | | | |
| | | US- | | | |
| | | US- | | | |
| | | US- | | | |

**FOREIGN PATENT DOCUMENTS**

| Examiner Initials* | Cite No.[1] | Foreign Patent Document Country Code[3] Number[4] Kind Code[5] (if known) | Publication Date MM-DD-YYYY | Name of Patentee or Applicant of Cited Document | Pages, Columns, Lines, Where Relevant Passages Or Relevant Figures Appear | T[6] |
|---|---|---|---|---|---|---|
| | | | | | | |
| | | | | | | |
| | | | | | | |
| | | | | | | |
| | | | | | | |
| | | | | | | |

| Examiner Signature | /Octavia Davis/ | Date Considered | 11/24/2007 |
|---|---|---|---|

*EXAMINER: Initial if reference considered, whether or not citation is in conformance with MPEP 609. Draw line through citation if not in conformance and not considered. Include copy of this form with next communication to applicant. [1] Applicant's unique citation designation number (optional). [2] See Kinds Codes of USPTO Patent Documents at www.uspto.gov or MPEP 901.04. [3] Enter Office that issued the document, by the two-letter code (WIPO Standard ST.3). [4] For Japanese patent documents, the indication of the year of the reign of the Emperor must precede the serial number of the patent document. [5] Kind of document by the appropriate symbols as indicated on the document under WIPO Standard ST.16 if possible. [6] Applicant is to place a check mark here if English language Translation is attached.

This collection of information is required by 37 CFR 1.97 and 1.98. The information is required to obtain or retain a benefit by the public which is to file (and by the USPTO to process) an application. Confidentiality is governed by 35 U.S.C. 122 and 37 CFR 1.14. This collection is estimated to take 2 hours to complete, including gathering, preparing, and submitting the completed application form to the USPTO. Time will vary depending upon the individual case. Any comments on the amount of time you require to complete this form and/or suggestions for reducing this burden, should be sent to the Chief Information Officer, U.S. Patent and Trademark Office, P.O. Box 1450, Alexandria, VA 22313-1450. DO NOT SEND FEES OR COMPLETED FORMS TO THIS ADDRESS. SEND TO: Commissioner for Patents, P.O. Box 1450, Alexandria, VA 22313-1450.

*If you need assistance in completing the form, call 1-800-PTO-9199 (1-800-786-9199) and select option 2.*

| Notice of References Cited | Application/Control No. 11/504,981 | Applicant(s)/Patent Under Reexamination GUPTA ET AL. | |
|---|---|---|---|
| | Examiner Octavia Davis | Art Unit 2855 | Page 1 of 1 |

**U.S. PATENT DOCUMENTS**

| * | | Document Number Country Code-Number-Kind Code | Date MM-YYYY | Name | Classification |
|---|---|---|---|---|---|
| * | A | US-6,327,030 | 12-2001 | Ifju et al. | 356/32 |
| * | B | US-5,920,017 | 07-1999 | Pechersky, Martin J. | 73/762 |
| * | C | US-4,353,649 | 10-1982 | Kishii, Toru | 356/33 |
| * | D | US-5,199,304 | 04-1993 | Ferguson, Hugo S. | 73/800 |
| * | E | US-6,219,139 | 04-2001 | Lesniak, Jon R. | 356/366 |
| | F | US- | | | |
| | G | US- | | | |
| | H | US- | | | |
| | I | US- | | | |
| | J | US- | | | |
| | K | US- | | | |
| | L | US- | | | |
| | M | US- | | | |

**FOREIGN PATENT DOCUMENTS**

| * | | Document Number Country Code-Number-Kind Code | Date MM-YYYY | Country | Name | Classification |
|---|---|---|---|---|---|---|
| | N | | | | | |
| | O | | | | | |
| | P | | | | | |
| | Q | | | | | |
| | R | | | | | |
| | S | | | | | |
| | T | | | | | |

**NON-PATENT DOCUMENTS**

| * | | Include as applicable: Author, Title Date, Publisher, Edition or Volume, Pertinent Pages) |
|---|---|---|
| | U | |
| | V | |
| | W | |
| | X | |

*A copy of this reference is not being furnished with this Office action. (See MPEP § 707.05(a).)
Dates in MM-YYYY format are publication dates. Classifications may be US or foreign.

| Index of Claims | Application/Control No. | Applicant(s)/Patent Under Reexamination |
|---|---|---|
| | 11504981 | GUPTA ET AL. |
| | **Examiner** | **Art Unit** |
| | Davis, Octavia | 2855 |

| | | | | | | | |
|---|---|---|---|---|---|---|---|
| ✓ | Rejected | - | Cancelled | N | Non-Elected | A | Appeal |
| = | Allowed | ÷ | Restricted | I | Interference | O | Objected |

☐ Claims renumbered in the same order as presented by applicant ☐ CPA ☐ T.D. ☐ R.1.47

| CLAIM | | DATE | | | | | | | | |
|---|---|---|---|---|---|---|---|---|---|---|
| Final | Original | 11/24/2007 | | | | | | | | |
| | 1 | ✓ | | | | | | | | |
| | 2 | ✓ | | | | | | | | |
| | 3 | ✓ | | | | | | | | |
| | 4 | ✓ | | | | | | | | |
| | 5 | ✓ | | | | | | | | |
| | 6 | ✓ | | | | | | | | |
| | 7 | ✓ | | | | | | | | |
| | 8 | ✓ | | | | | | | | |
| | 9 | ✓ | | | | | | | | |
| | 10 | ✓ | | | | | | | | |
| | 11 | ✓ | | | | | | | | |
| | 12 | ✓ | | | | | | | | |
| | 13 | ✓ | | | | | | | | |
| | 14 | ✓ | | | | | | | | |
| | 15 | ✓ | | | | | | | | |
| | 16 | ✓ | | | | | | | | |
| | 17 | ✓ | | | | | | | | |
| | 18 | ✓ | | | | | | | | |
| | 19 | ✓ | | | | | | | | |
| | 20 | ✓ | | | | | | | | |
| | 21 | ✓ | | | | | | | | |
| | 22 | ✓ | | | | | | | | |
| | 23 | ✓ | | | | | | | | |
| | 24 | ✓ | | | | | | | | |
| | 25 | ✓ | | | | | | | | |
| | 26 | ✓ | | | | | | | | |
| | 27 | ✓ | | | | | | | | |
| | 28 | ✓ | | | | | | | | |
| | 29 | ✓ | | | | | | | | |
| | 30 | ✓ | | | | | | | | |
| | 31 | ✓ | | | | | | | | |
| | 32 | ✓ | | | | | | | | |
| | 33 | ✓ | | | | | | | | |
| | 34 | ✓ | | | | | | | | |
| | 35 | ✓ | | | | | | | | |
| | 36 | ✓ | | | | | | | | |

| Index of Claims | Application/Control No. | Applicant(s)/Patent Under Reexamination |
|---|---|---|
| | 11504981 | GUPTA ET AL. |
| | **Examiner** | **Art Unit** |
| | Davis, Octavia | 2855 |

| | | | | | | | |
|---|---|---|---|---|---|---|---|
| ✓ | Rejected | - | Cancelled | N | Non-Elected | A | Appeal |
| = | Allowed | ÷ | Restricted | I | Interference | O | Objected |

☐ Claims renumbered in the same order as presented by applicant ☐ CPA ☐ T.D. ☐ R.1.47

| CLAIM | | DATE | | | | | | | | |
|---|---|---|---|---|---|---|---|---|---|---|
| Final | Original | 11/24/2007 | | | | | | | | |
| | 37 | ✓ | | | | | | | | |

| Search Notes | Application/Control No. | Applicant(s)/Patent Under Reexamination |
|---|---|---|
| | 11504981 | GUPTA ET AL. |
| | **Examiner** | **Art Unit** |
| | Davis, Octavia | 2855 |

## SEARCHED

| Class | Subclass | Date | Examiner |
|---|---|---|---|
| 73 | 777,862.49 | 11/20/07 | OD |

## SEARCH NOTES

| Search Notes | Date | Examiner |
|---|---|---|
| East Text Search | 11/20/07 | OD |

## INTERFERENCE SEARCH

| Class | Subclass | Date | Examiner |
|---|---|---|---|
| | | | |

# EAST Search History

| Ref # | Hits | Search Query | DBs | Default Operator | Plurals | Time Stamp |
|---|---|---|---|---|---|---|
| L1 | 20 | "5838446" "6072568" "5920017" | US-PGPUB; USPAT; USOCR; FPRS; EPO; JPO; DERWENT; IBM_TDB | OR | ON | 2007/11/20 19:29 |
| L2 | 3 | 1 and (tensile ) near3 (load stress strain ) | US-PGPUB; USPAT; USOCR; FPRS; EPO; JPO; DERWENT; IBM_TDB | OR | ON | 2007/11/20 19:43 |
| L3 | 9374 | Gupta.in. | US-PGPUB; USPAT; USOCR; FPRS; EPO; JPO; DERWENT; IBM_TDB | OR | ON | 2007/11/20 19:29 |
| L4 | 2 | 3 and (interface ) near3 (tensile ).clm. | US-PGPUB; USPAT; USOCR; FPRS; EPO; JPO; DERWENT; IBM_TDB | OR | ON | 2007/11/20 19:30 |
| L5 | 2 | 2 and (glass ) | US-PGPUB; USPAT; USOCR; FPRS; EPO; JPO; DERWENT; IBM_TDB | OR | ON | 2007/11/20 19:35 |
| L6 | 1 | 5 and (laser ) | US-PGPUB; USPAT; USOCR; FPRS; EPO; JPO; DERWENT; IBM_TDB | OR | ON | 2007/11/20 19:35 |
| L7 | 705 | 73/800.ccls. | US-PGPUB; USPAT; USOCR; FPRS; EPO; JPO; DERWENT; IBM_TDB | OR | ON | 2007/11/20 19:35 |

# EAST Search History

| | | | | | | |
|---|---|---|---|---|---|---|
| L8 | 101 | 7 and (tensile ) near3 (load stress strain ) | US-PGPUB; USPAT; USOCR; FPRS; EPO; JPO; DERWENT; IBM_TDB | OR | ON | 2007/11/20 19:36 |
| L9 | 34 | 8 and (glass ) | US-PGPUB; USPAT; USOCR; FPRS; EPO; JPO; DERWENT; IBM_TDB | OR | ON | 2007/11/20 19:43 |
| L10 | 17 | 9 and (coat$4) | US-PGPUB; USPAT; USOCR; FPRS; EPO; JPO; DERWENT; IBM_TDB | OR | ON | 2007/11/20 19:37 |
| L11 | 5 | 10 and (axial$4) | US-PGPUB; USPAT; USOCR; FPRS; EPO; JPO; DERWENT; IBM_TDB | OR | ON | 2007/11/20 19:37 |
| L12 | 4 | 11 and (wave$4) | US-PGPUB; USPAT; USOCR; FPRS; EPO; JPO; DERWENT; IBM_TDB | OR | ON | 2007/11/20 19:43 |
| L13 | 3 | 12 and (laser ) | US-PGPUB; USPAT; USOCR; FPRS; EPO; JPO; DERWENT; IBM_TDB | OR | ON | 2007/11/20 19:40 |
| L14 | 0 | 1 and (tensile ) near3 (force pressure ) | US-PGPUB; USPAT; USOCR; FPRS; EPO; JPO; DERWENT; IBM_TDB | OR | ON | 2007/11/20 19:43 |



Boeing Ex. 1002, p. 101 of 177
Boeing v. Regents Univ. Cal.

# EAST Search History

| | | | | | | |
|---|---|---|---|---|---|---|
| L15 | 56 | 7 and (tensile ) near3 (force pressure ) | US-PGPUB; USPAT; USOCR; FPRS; EPO; JPO; DERWENT; IBM_TDB | OR | ON | 2007/11/20 19:43 |
| L16 | 24 | 15 and (glass ) | US-PGPUB; USPAT; USOCR; FPRS; EPO; JPO; DERWENT; IBM_TDB | OR | ON | 2007/11/20 19:43 |
| L17 | 11 | 16 and (wave$4) | US-PGPUB; USPAT; USOCR; FPRS; EPO; JPO; DERWENT; IBM_TDB | OR | ON | 2007/11/20 19:44 |
| L18 | 7 | 17 and (coat$4) | US-PGPUB; USPAT; USOCR; FPRS; EPO; JPO; DERWENT; IBM_TDB | OR | ON | 2007/11/20 19:44 |
| L19 | 6 | 18 and (laser) | US-PGPUB; USPAT; USOCR; FPRS; EPO; JPO; DERWENT; IBM_TDB | OR | ON | 2007/11/20 19:44 |


Boeing Ex. 1002, p. 102 of 177
Boeing v. Regents Univ. Cal.

UNITED STATES PATENT AND TRADEMARK OFFICE

UNITED STATES DEPARTMENT OF COMMERCE
United States Patent and Trademark Office
Address: COMMISSIONER FOR PATENTS
P.O. Box 1450
Alexandria, Virginia 22313-1450
www.uspto.gov

| APPLICATION NUMBER | FILING OR 371(c) DATE | FIRST NAMED APPLICANT | ATTY. DOCKET NO./TITLE |
|---|---|---|---|
| 11/504,981 | 08/15/2006 | Vijay Gupta | UC03-126-2US |

**CONFIRMATION NO. 4584**

8156
JOHN P. O'BANION
O'BANION & RITCHEY LLP
400 CAPITOL MALL SUITE 1550
SACRAMENTO, CA95814

**Title:** Glass-modified stress waves for separation of ultra thin films and nanoelectronics device fabrication

**Publication No.** US-2007-0039395-A1
**Publication Date:** 02/22/2007

## NOTICE OF PUBLICATION OF APPLICATION

The above-identified application will be electronically published as a patent application publication pursuant to 37 CFR 1.211, et seq. The patent application publication number and publication date are set forth above.

The publication may be accessed through the USPTO's publically available Searchable Databases via the Internet at www.uspto.gov. The direct link to access the publication is currently http://www.uspto.gov/patft/.

The publication process established by the Office does not provide for mailing a copy of the publication to applicant. A copy of the publication may be obtained from the Office upon payment of the appropriate fee set forth in 37 CFR 1.19(a)(1). Orders for copies of patent application publications are handled by the USPTO's Office of Public Records. The Office of Public Records can be reached by telephone at (703) 308-9726 or (800) 972-6382, by facsimile at (703) 305-8759, by mail addressed to the United States Patent and Trademark Office, Office of Public Records, Alexandria, VA 22313-1450 or via the Internet.

In addition, information on the status of the application, including the mailing date of Office actions and the dates of receipt of correspondence filed in the Office, may also be accessed via the Internet through the Patent Electronic Business Center at www.uspto.gov using the public side of the Patent Application Information and Retrieval (PAIR) system. The direct link to access this status information is currently http://pair.uspto.gov/. Prior to publication, such status information is confidential and may only be obtained by applicant using the private side of PAIR.

Further assistance in electronically accessing the publication, or about PAIR, is available by calling the Patent Electronic Business Center at 703-305-3028.

Pre-Grant Publication Division, 703-605-4283

UNITED STATES PATENT AND TRADEMARK OFFICE

UNITED STATES DEPARTMENT OF COMMERCE
United States Patent and Trademark Office
Address: COMMISSIONER FOR PATENTS
P.O. Box 1450
Alexandria, Virginia 22313-1450
www.uspto.gov

| APPLICATION NUMBER | FILING or 371(c) DATE | GRP ART UNIT | FIL FEE REC'D | ATTY.DOCKET.NO | DRAWINGS | TOT CLAIMS | IND CLAIMS |
|---|---|---|---|---|---|---|---|
| 11/504,981 | 08/15/2006 | 2855 | 1090 | UC03-126-2US | 12 | 37 | 4 |

**CONFIRMATION NO. 4584**

**UPDATED FILING RECEIPT**

8156
JOHN P. O'BANION
O'BANION & RITCHEY LLP
400 CAPITOL MALL SUITE 1550
SACRAMENTO, CA95814

Date Mailed: 11/13/2006

Receipt is acknowledged of this regular Patent Application. It will be considered in its order and you will be notified as to the results of the examination. Be sure to provide the U.S. APPLICATION NUMBER, FILING DATE, NAME OF APPLICANT, and TITLE OF INVENTION when inquiring about this application. Fees transmitted by check or draft are subject to collection. Please verify the accuracy of the data presented on this receipt. **If an error is noted on this Filing Receipt, please mail to the Commissioner for Patents P.O. Box 1450 Alexandria Va 22313-1450. Please provide a copy of this Filing Receipt with the changes noted thereon. If you received a "Notice to File Missing Parts" for this application, please submit any corrections to this Filing Receipt with your reply to the Notice. When the USPTO processes the reply to the Notice, the USPTO will generate another Filing Receipt incorporating the requested corrections (if appropriate).**

**Applicant(s)**

Vijay Gupta, Sherman Oaks, CA;
Vassili A. Kireev, Sunnnyvale, CA;

**Power of Attorney:**

James Ritchey--32594
John O'Banion--33201
James Peacock III--40124
Steven Smith--44343
Rodger Rast--45853
M. Carrillo--47474
Richard Wiesner--48748
Robert Kramer--51242

**Domestic Priority data as claimed by applicant**

This application is a CON of PCT/US05/07304 03/07/2005
which claims benefit of 60/550,803 03/05/2004

**Foreign Applications**

**If Required, Foreign Filing License Granted:** 08/30/2006

The country code and number of your priority application, to be used for filing abroad under the Paris Convention, is **US11/504,981**

**Projected Publication Date:** 02/22/2007

**Non-Publication Request:** No

**Early Publication Request:** No

** SMALL ENTITY **

**Title**

Glass-modified stress waves for separation of ultra thin films and nanoelectronics device fabrication

**Preliminary Class**

073

## PROTECTING YOUR INVENTION OUTSIDE THE UNITED STATES

Since the rights granted by a U.S. patent extend only throughout the territory of the United States and have no effect in a foreign country, an inventor who wishes patent protection in another country must apply for a patent in a specific country or in regional patent offices. Applicants may wish to consider the filing of an international application under the Patent Cooperation Treaty (PCT). An international (PCT) application generally has the same effect as a regular national patent application in each PCT-member country. The PCT process **simplifies** the filing of patent applications on the same invention in member countries, but **does not result** in a grant of "an international patent" and does not eliminate the need of applicants to file additional documents and fees in countries where patent protection is desired.

Almost every country has its own patent law, and a person desiring a patent in a particular country must make an application for patent in that country in accordance with its particular laws. Since the laws of many countries differ in various respects from the patent law of the United States, applicants are advised to seek guidance from specific foreign countries to ensure that patent rights are not lost prematurely.

Applicants also are advised that in the case of inventions made in the United States, the Director of the USPTO must issue a license before applicants can apply for a patent in a foreign country. The filing of a U.S. patent application serves as a request for a foreign filing license. The application's filing receipt contains further information and guidance as to the status of applicant's license for foreign filing.

Applicants may wish to consult the USPTO booklet, "General Information Concerning Patents" (specifically, the section entitled "Treaties and Foreign Patents") for more information on timeframes and deadlines for filing foreign patent applications. The guide is available either by contacting the USPTO Contact Center at 800-786-9199, or it can be viewed on the USPTO website at http://www.uspto.gov/web/offices/pac/doc/general/index.html.

For information on preventing theft of your intellectual property (patents, trademarks and copyrights), you may wish to consult the U.S. Government website, http://www.stopfakes.gov. Part of a Department of Commerce initiative, this website includes self-help "toolkits" giving innovators guidance on how to protect intellectual property in specific countries such as China, Korea and Mexico. For questions regarding patent enforcement issues, applicants may call the U.S. Government hotline at 1-866-999-HALT (1-866-999-4158).

---

## LICENSE FOR FOREIGN FILING UNDER

## Title 35, United States Code, Section 184

## Title 37, Code of Federal Regulations, 5.11 & 5.15

**GRANTED**

The applicant has been granted a license under 35 U.S.C. 184, if the phrase "IF REQUIRED, FOREIGN FILING LICENSE GRANTED" followed by a date appears on this form. Such licenses are issued in all applications where the conditions for issuance of a license have been met, regardless of whether or not a license may be required as set forth in 37 CFR 5.15. The scope and limitations of this license are set forth in 37 CFR 5.15(a) unless an earlier license has been issued under 37 CFR 5.15(b). The license is subject to revocation upon written notification. The date indicated is the effective date of the license, unless an earlier license of similar scope has been granted under 37 CFR 5.13 or 5.14.

This license is to be retained by the licensee and may be used at any time on or after the effective date thereof unless it is revoked. This license is automatically transferred to any related applications(s) filed under 37 CFR 1.53(d). This license is not retroactive.

The grant of a license does not in any way lessen the responsibility of a licensee for the security of the subject matter as imposed by any Government contract or the provisions of existing laws relating to espionage and the national security or the export of technical data. Licensees should apprise themselves of current regulations especially with respect to certain countries, of other agencies, particularly the Office of Defense Trade Controls, Department of State (with respect to Arms, Munitions and Implements of War (22 CFR 121-128)); the Bureau of Industry and Security, Department of Commerce (15 CFR parts 730-774); the Office of Foreign AssetsControl, Department of Treasury (31 CFR Parts 500+) and the Department of Energy.

**NOT GRANTED**

No license under 35 U.S.C. 184 has been granted at this time, if the phrase "IF REQUIRED, FOREIGN FILING LICENSE GRANTED" DOES NOT appear on this form. Applicant may still petition for a license under 37 CFR 5.12, if a license is desired before the expiration of 6 months from the filing date of the application. If 6 months has lapsed from the filing date of this application and the licensee has not received any indication of a secrecy order under 35 U.S.C. 181, the licensee may foreign file the application pursuant to 37 CFR 5.15(b).

UNITED STATES PATENT AND TRADEMARK OFFICE

UNITED STATES DEPARTMENT OF COMMERCE
United States Patent and Trademark Office
Address: COMMISSIONER FOR PATENTS
P.O. Box 1450
Alexandria, Virginia 22313-1450
www.uspto.gov

NOV 0 2 2006
PATENT & TRADEMARK OFFICE

| APPLICATION NUMBER | FILING OR 371 (c) DATE | FIRST NAMED APPLICANT | ATTORNEY DOCKET NUMBER |
|---|---|---|---|
| 11/504,981 | 08/15/2006 | Vijay Gupta | UC03-126-2US |

**CONFIRMATION NO. 4584**

**FORMALITIES LETTER**

8156
JOHN P. O'BANION
O'BANION & RITCHEY LLP
400 CAPITOL MALL SUITE 1550
SACRAMENTO, CA 95814

Date Mailed: 08/30/2006

## NOTICE TO FILE MISSING PARTS OF NONPROVISIONAL APPLICATION

### FILED UNDER 37 CFR 1.53(b)

***Filing Date Granted***

**Items Required To Avoid Abandonment:**

An application number and filing date have been accorded to this application. The item(s) indicated below, however, are missing. Applicant is given **TWO MONTHS** from the date of this Notice within which to file all required items and pay any fees required below to avoid abandonment. Extensions of time may be obtained by filing a petition accompanied by the extension fee under the provisions of 37 CFR 1.136(a).

- The statutory basic filing fee is missing.
  *Applicant must submit $* **150** *to complete the basic filing fee for a small entity.*
- The oath or declaration is missing. *A properly signed oath or declaration in compliance with 37 CFR 1.63, identifying the application by the above Application Number and Filing Date, is required.*
  *Note: If a petition under 37 CFR 1.47 is being filed, an oath or declaration in compliance with 37 CFR 1.63 signed by all available joint inventors, or if no inventor is available by a party with sufficient proprietary interest, is required.*

The applicant needs to satisfy supplemental fees problems indicated below.

The required item(s) identified below must be timely submitted to avoid abandonment:

- Additional claim fees of **$525** as a small entity, including any required multiple dependent claim fee, are required. Applicant must submit the additional claim fees or cancel the additional claims for which fees are due.
- To avoid abandonment, a surcharge (for late submission of filing fee, search fee, examination fee or oath or declaration) as set forth in 37 CFR 1.16(f) of $65 for a small entity in compliance with 37 CFR 1.27, must be submitted with the missing items identified in this letter.

11/02/2006 CNGUYEN2 00000090 11504981

01 FC:2011 150.00 OP
02 FC:2111 250.00 OP
03 FC:2311 100.00 OP
04 FC:2051 65.00 OP
05 FC:2201 100.00 OP
06 FC:2202 425.00 OP

**SUMMARY OF FEES DUE:**

Total additional fee(s) required for this application is **$1090** for a small entity

- **$150** Statutory basic filing fee.

- **$65** Surcharge.

- The application search fee has not been paid. Applicant must submit **$250** to complete the search fee.
- The application examination fee has not been paid. Applicant must submit **$100** to complete the examination fee for a small entity in compliance with 37 CFR 1.27.

- Total additional claim fee(s) for this application is **$525**

  - **$100** for **1** independent claims over 3.
  - **$425** for **17** total claims over 20.

Replies should be mailed to: Mail Stop Missing Parts
Commissioner for Patents
P.O. Box 1450
Alexandria VA 22313-1450

---

***A copy of this notice MUST be returned with the reply.***

TQUACH

Office of Initial Patent Examination (571) 272-4000, or 1-800-PTO-9199, or 1-800-972-6382
PART I - ATTORNEY/APPLICANT COPY

OIPE IAP75
NOV 0 2 2006
PATENT & TRADEMARK OFFICE

**IN THE UNITED STATES PATENT AND TRADEMARK OFFICE**

Applicant: VIJAY GUPTA et al.
Serial No.: 11/504,981
Filed: AUGUST 15, 2006
For: GLASS-MODIFIED STRESS WAVES FOR SEPARATION OF ULTRA THIN FILMS AND NANOELECTRONICS DEVICE FABRICATION
Group:
Examiner:
Docket No.: UC03-126-2US
Cust. No.: 8156
Conf. No.: 4584

**MAIL STOP MISSING PARTS**
**Commissioner for Patents**
**P.O. Box 1450**
**Alexandria, VA 22313-1450**

**SUBMISSION OF MISSING PARTS OF APPLICATION**
**UNDER 37 C.F.R. § 1.53**
**(SMALL ENTITY)**

Dear Sir:

In response to the Notice to File Missing Parts of Application (PTO-1533) mailed August 30, 2006, a copy of which is enclosed, please find the following documents which are incorporated by reference herein:

1. Combined Declaration and Power of Attorney;
2. Power of Attorney by Assignee and Exclusion of Inventor(s) Under 37 C.F.R. 3.71;
3. Assignee Certification Under 37 C.F.R. 3.73(b);
4. Check in the amount of $ 1090 for filing fees;
5. Assignment Cover Letter with attached assignment;
6. Check in the amount of $40 (assignment recording fee).

The amount due for the filing fees and surcharge has been computed as follows:


Boeing Ex. 1002, p. 109 of 177
Boeing v. Regents Univ. Cal.

| | | |
|---|---|---|
| **Basic Fee** | **$150** | $ 150 |
| **Search Fee** | **$250** | $ 250 |
| **Examination Fee** | **$100** | $ 100 |
| **Application Size Fee** | **$125** for each 50 page block above 100 pages) | $ |

| | Number filed | | Number Extra | | | Rate | | |
|---|---|---|---|---|---|---|---|---|
| Total Claims | 37 | - 20 | = | 17 | X | $ 25 | = | 425 |
| Independent Claims | 4 | - 3 | = | 1 | X | $100 | = | 100 |
| Multiple Dependent Claim Present | | | | | + | $180 | = | |

| | | |
|---|---|---|
| | Filing Fee Calculation | $ 1025 |
| | **Surcharge** | $ 65 |
| | **TOTAL FILING FEE** | **$ 1090** |
| **Amount already paid** | | **LESS ( $ )** |
| **TOTAL FEES DUE** | | **$ 1090** |

Please charge any additional fees due to deposit account no. 07-1137.

Having now complied with all of the requirements of 37 C.F.R. 1.53, the Applicants respectfully request that this application be placed upon the files for examination.

Dated: 10/30/06

Respectfully submitted,

John P. O'Banion, Reg. No. 33,201
O'BANION & RITCHEY LLP
400 Capitol Mall, Suite 1550
Sacramento, CA 95814
(916) 498-1010

## CERTIFICATION UNDER 37 CFR 1.8

I hereby certify that the foregoing:

OIPE IAP75
NOV 0 2 2006
PATENT & TRADEMARK OFFICE

SUBMISSION OF MISSING PARTS OF APPLICATION

is being deposited with the United States Postal Service on October 30, 2006 with sufficient postage as first class mail in an envelope addressed to the: Commissioner for Patents, P.O. Box 1450, Alexandria, VA 22313-1450.

JOHN P. O'BANION

**(Type or print name of person mailing paper)**

(Signature of person mailing paper)

OIPE IAP75 NOV 02 2006 PATENT & TRADEMARK OFFICE

**PATENT**

Applicant: VIJAY GUPTA et al.
Serial No.: 11/504,981
Filing Date: AUGUST 15, 2006
Title: GLASS-MODIFIED STRESS WAVES FOR SEPARATION OF ULTRA THIN FILMS AND NANOELECTRONICS DEVICE FABRICATION

Group:
Examiner:
Docket No.: UC03-126-2US
Cust. No.: 8156

**Commissioner for Patents**
**P.O. Box 1450**
**Alexandria, VA 22313-1450**

## COMBINED DECLARATION AND POWER OF ATTORNEY

*(ORIGINAL, DESIGN, SUPPLEMENTAL, NATIONAL STAGE OF PCT, DIVISIONAL, CONTINUATION OR CONTINUATION-IN-PART)*

As a below named inventor, I hereby declare that:

### TYPE OF DECLARATION

This declaration is of the following type:

- _ original (regular)
- _ design
- X supplemental-continuation of PCT Application in the U.S.
- _ national stage of PCT
- _ divisional
- _ continuation
- _ continuation-in-part

### INVENTORSHIP IDENTIFICATION

WARNING: If the inventors are each not the inventors of all of the claims, an explanation of the facts, including the ownership of all the claims at the time the last claimed invention was made, should be submitted.

My residence, post office address, and citizenship are as stated below next to my name. I believe I am the original, first and sole inventor (if only one name is listed below) or an original, first and joint inventor (if plural names are listed below) of the subject matter which is claimed and for which a patent is sought on the invention described in

## SPECIFICATION IDENTIFICATION

[ ] the specification filed herewith by the above-named inventors, with the title listed above.

[ ] the specification filed herewith by the above-named inventors, with the title listed above, and which was amended by the Preliminary Amendment filed herewith.

[X] the specification identified above.

[ ] the specification identified above, as amended by the Preliminary Amendment filed herewith.

[ ] the specification identified above, and which was amended on _____.

[ ] PCT International Application No. _____ filed on _____, and amended under PCT Article 19 on _____ (if applicable).

## ACKNOWLEDGMENT OF REVIEW OF PAPERS AND DUTY OF CANDOR

I hereby state that I have reviewed and understand the contents of the above-identified specification, including the claims, as amended by any amendment referred to above.

I acknowledge the duty to disclose information which is material to patentability as defined in 37 C.F.R. § 1.56.

## PRIORITY CLAIM (35 U.S.C. § 119(a)-(d))

I hereby claim foreign priority benefits under 35 U.S.C. §§ 119(a)-(d) of any foreign application(s) for patent or inventor's certificate or under 35 U.S.C. § 365(b) of any PCT international application(s) designating at least one country other than the United States of America listed below, and have also identified below any foreign application(s) or inventor's certificate or any PCT international application(s) designating at least one country other than the United States of America filed by me on the same subject matter having a filing date before that of the application(s) of which priority is claimed.

X no such applications have been filed.

_ such application have been filed as follows.

**PRIOR FOREIGN/PCT APPLICATION(S) FILED WITHIN 12 MONTHS (6 MONTHS FOR DESIGN) PRIOR TO THIS APPLICATION AND ANY PRIORITY CLAIMS UNDER 35 U.S.C. § 119(a)-(d)**

| COUNTRY (OR INDICATE IF PCT) | APPLICATION NUMBER | FILING DATE (day, month, year) | PRIORITY CLAIMED UNDER 37 U.S.C. § 119 |
|---|---|---|---|
| | | | _ YES _ NO |
| | | | _ YES _ NO |
| | | | _ YES _ NO |
| | | | _ YES _ NO |

## CLAIM FOR BENEFIT OF PRIOR U.S. PROVISIONAL APPLICATION(S) (35 U.S.C. § 119(e))

I hereby claim the benefit under Title 35, United States Code, § 119(e) of any United States provisional applications (s) listed below:

| PROVISIONAL APPLICATION SERIAL NUMBER | FILING DATE OF PROVISIONAL APPLICATION |
|---|---|
| 60/550,803 | MARCH 5, 2004 |
| | |
| | |

## CLAIM FOR BENEFIT OF EARLIER U.S./PCT APPLICATIONS UNDER 35 U.S.C. 120

(complete this part only if this is a divisional, continuation, CIP or national stage of PCT)

I/We hereby claim the benefit under Title 35, United States Code, § 120 of any United States application(s) or PCT international application(s) designating the United States of America that is/are listed below and, insofar as the subject matter of each of the claims of this application is not disclosed in that/those prior application(s) in the manner provided by the first paragraph of Title 35, United States Code, § 112, I acknowledge the duty to disclose information which is material to patentability under 37 C.F.R.§ 1.56, which occurred between the filing date of the prior application(s) and the national or PCT international filing date of this application.

PRIOR U.S. APPLICATIONS OR PCT INTERNATIONAL APPLICATIONS DESIGNATING THE U.S. FOR BENEFIT UNDER 35 U.S.C. 120:

**1. U.S. Applications:**

| SERIAL NUMBER | FILING DATE |
|---|---|
| | |
| | |
| | |

**2. PCT Applications Designating The U.S.**

| PCT APPLICATION NUMBER | PCT FILING DATE | U.S. SERIAL NUMBER |
|---|---|---|
| PCT/US2005/007304 | MARCH 7, 2005 | |
| | | |
| | | |

## POWER OF ATTORNEY

As a named inventor, I hereby appoint the following attorney(s) and/or agent(s) to prosecute this application and transact all business in the United States Patent and Trademark Office connected therewith.

| | |
|---|---|
| John P. O'Banion | Reg. No. 33,201 |
| James M. Ritchey | Reg. No. 32,594 |
| James C. Peacock III | Reg. No. 40,124 |
| Steven L. Smith | Reg. No. 44,343 |
| Rodger H. Rast | Reg. No. 45,853 |
| Richard M. Wiesner | Reg. No. 48,748 |
| Robert F. Kramer | Reg. No. 51,242 |
| M. Robyn Carrillo | Reg. No. 47,474 |

_ Attached as part of this declaration and power of attorney is the authorization of the above-named attorney to accept and follow instructions from my representative(s).

**SEND CORRESPONDENCE TO:**

**CUSTOMER NUMBER 8156**

John P. O'Banion
O'BANION & RITCHEY LLP
400 Capitol Mall, Suite 1550
Sacramento, CA 95814

**DIRECT TELEPHONE CALLS TO:**

John P. O'Banion
(916) 498-1010

## DECLARATION

I hereby declare that all statements made herein of my own knowledge are true and that all statements made on information and belief are believed to be true; and further that these statements were made with the knowledge that willful false statements and the like so made are punishable by fine or imprisonment, or both, under Section 1001 of Title 18 of the United States Code, and that such willful false statements may jeopardize the validity of the application or any patent issued thereon.

## SIGNATURE(S)

Full name of inventor: VIJAY GUPTA

Inventor's Signature: Vijay Gupta

Date: 10/26/06 Country of Citizenship: UNITED STATES

Residence: SHERMAN OAKS, CALIFORNIA

P.O. Address: 15133 GREENLEAF STREET, SHERMAN OAKS, CA 91403

Full name of inventor: VASSILI A KIREEV

Inventor's Signature: _____

Date: _____ Country of Citizenship: RUSSIA

Residence: SUNNYVALE, CALIFORNIA

P.O. Address: 247 ARRIBA DRIVE, APT. 1, SUNNYVALE, CA 94086

## POWER OF ATTORNEY

As a named inventor, I hereby appoint the following attorney(s) and/or agent(s) to prosecute this application and transact all business in the United States Patent and Trademark Office connected therewith.

| | |
|---|---|
| John P. O'Banion | Reg. No. 33,201 |
| James M. Ritchey | Reg. No. 32,594 |
| James C. Peacock III | Reg. No. 40,124 |
| Steven L. Smith | Reg. No. 44,343 |
| Rodger H. Rast | Reg. No. 45,853 |
| Richard M. Wiesner | Reg. No. 48,748 |
| Robert F. Kramer | Reg. No. 51,242 |
| M. Robyn Carrillo | Reg. No. 47,474 |

— Attached as part of this declaration and power of attorney is the authorization of the above-named attorney to accept and follow instructions from my representative(s).

**SEND CORRESPONDENCE TO:**

**CUSTOMER NUMBER 8156**

John P. O'Banion
O'BANION & RITCHEY LLP
400 Capitol Mall, Suite 1550
Sacramento, CA 95814

**DIRECT TELEPHONE CALLS TO:**

John P. O'Banion
(916) 498-1010

## DECLARATION

I hereby declare that all statements made herein of my own knowledge are true and that all statements made on information and belief are believed to be true; and further that these statements were made with the knowledge that willful false statements and the like so made are punishable by fine or imprisonment, or both, under Section 1001 of Title 18 of the United States Code, and that such willful false statements may jeopardize the validity of the application or any patent issued thereon.

### SIGNATURE(S)

Full name of inventor: VIJAY GUPTA

Inventor's Signature: _____

Date: _____ Country of Citizenship: UNITED STATES

Residence: SHERMAN OAKS, CALIFORNIA

P.O. Address: 15133 GREENLEAF STREET, SHERMAN OAKS, CA 91403

Full name of inventor: VASSILI A KIREEV

Inventor's Signature: _____

Date: 10/27/06 Country of Citizenship: RUSSIA

Residence: SUNNYVALE, CALIFORNIA

P.O. Address: 247 ARRIBA DRIVE, APT. 1, SUNNYVALE, CA 94086

CHECK PROPER BOX(ES) FOR ANY OF THE FOLLOWING ADDED PAGE(S) WHICH FORM A PART OF THIS DECLARATION

_____ Signature by administrator(trix), executor(trix) or legal representative for deceased or incapacitated inventor.
Number of pages added _____.

_____ Signature for inventor who refuses to sign or cannot be reached by person authorized under 37 CFR 1.47.
Number of pages added _____.

_____ Signature by one joint inventor on behalf of deceased inventor(s) where legal representative cannot be appointed in time under 37 CFR 1.47.
Number of pages added _____.

_____ Authorization of attorney(s) to accept and follow instructions from representative.

X **This Declaration ends with this page.**

## CERTIFICATION UNDER 37 CFR 1.8

I hereby certify that the foregoing:

OIPE IAP75
NOV 0 2 2006
PATENT & TRADEMARK OFFICE

COMBINED DECLARATION AND POWER OF ATTORNEY

is being deposited with the United States Postal Service on October 30, 2006 with sufficient postage as first class mail in an envelope addressed to the: Commissioner for Patents, P.O. Box 1450, Alexandria, VA 22313-1450.

JOHN P. O'BANION

**(Type or print name of person mailing paper)**

(Signature of person mailing paper)

RIPE IAP75 NOV 02 2006 PATENT & TRADEMARK OFFICE

**IN THE UNITED STATES PATENT AND TRADEMARK OFFICE**

Inventor: VIJAY GUPTA; VASSILI A. KIREEV
Serial No.: 11/504,981
Filing Date: AUGUST 15, 2006
Title: GLASS-MODIFIED STRESS WAVES FOR SEPARATION OF ULTRA THIN FILMS AND NANOELECTRONICS DEVICE FABRICATION

Group No.:
Examiner:
Docket No.: UC03-126-2US
Cust. No.: 8156

**Commissioner for Patents**
**P.O. Box 1450**
**Alexandria, VA 22313-1450**

**POWER OF ATTORNEY BY ASSIGNEE**
**AND EXCLUSION OF INVENTOR(S) UNDER 37 C.F.R. 3.71**

Dear Sir:

The undersigned assignee of the entire interest in the above-identified subject application hereby appoints

| | |
|---|---|
| John P. O'Banion | Reg. No. 33,201 |
| James M. Ritchey | Reg. No. 32,594 |
| James C. Peacock III | Reg. No. 40,124 |
| Steven L. Smith | Reg. No. 44,343 |
| Rodger H. Rast | Reg. No. 45,853 |
| Richard M. Wiesner | Reg. No. 48,748 |
| Robert F. Kramer | Reg. No. 51,242 |
| M. Robyn Carrillo | Reg. No. 47,474 |

as its attorneys to prosecute this application and to transact all business in the United States Patent and Trademark Office connected therewith, said appointment to be to the exclusion of the inventors and their attorney(s) in accordance with the provisions of 37 C.F.R. 3.71.

An assignment of the entire interest in the above-identified subject application:

[ ] was recorded on _____ at reel/frame _____.

[X] is submitted herewith for recording.

**SEND CORRESPONDENCE TO:**

**CUSTOMER NUMBER 8156**

John P. O'Banion
O'BANION & RITCHEY LLP
400 Capitol Mall, Suite 1550
Sacramento, CA 95814

**DIRECT TELEPHONE CALLS TO:**

John P. O'Banion
(916) 498-1010

Dated: October 30, 2006

ASSIGNEE: THE REGENTS OF THE UNIVERSITY OF CALIFORNIA

Signature: Cheryl Silver

Typed Name: Cheryl Silverman
Title: Patent Prosecution Manager
Office of Intellectual Property
University of California, Los Angeles
10920 Wilshire Boulevard, Suite 1200
MC 140648
Los Angeles, CA 90024

OIPE IAP75
NOV 02 2006
PATENT & TRADEMARK OFFICE

**IN THE UNITED STATES PATENT AND TRADEMARK OFFICE**

Inventor: VIJAY GUPTA; VASSILI A. KIREEV
Serial No.: 11/504,981
Filing Date: AUGUST 15, 2006
Title: GLASS-MODIFIED STRESS WAVES FOR SEPARATION OF ULTRA THIN FILMS AND NANOELECTRONICS DEVICE FABRICATION

Group No.:
Examiner:
Docket No.: UC03-126-2US
Cust. No.: 8156

**Commissioner for Patents**
**P.O. Box 1450**
**Alexandria, VA 22313-1450**

**ASSIGNEE CERTIFICATION UNDER 37 C.F.R. 3.73(b)**

Dear Sir:

In accordance with 37 C.F.R. 3.73(b), the assignee hereby certifies that the evidentiary documents with respect to its ownership have been reviewed and that, to the best of the assignee's knowledge and belief, title is in the assignee seeking to take this action.

Dated: October 30, 2006

ASSIGNEE: THE REGENTS OF THE UNIVERSITY OF CALIFORNIA

Signature: Cheryl Silverman

Typed Name: Cheryl Silverman
Title: Patent Prosecution Manager
Office of Intellectual Property
University of California, Los Angeles
10920 Wilshire Boulevard, Suite 1200
MC 140648
Los Angeles, CA 90024

## CERTIFICATION UNDER 37 CFR 1.8

OIPE
NOV 0 2 2006
PATENT & TRADEMARK OFFICE

I hereby certify that the foregoing:

ASSIGNEE CERTIFICATION

is being deposited with the United States Postal Service on October 30, 2006 with sufficient postage as first class mail in an envelope addressed to the: Commissioner for Patents, P.O. Box 1450, Alexandria, VA 22313-1450.

JOHN P. O'BANION

**(Type or print name of person mailing paper)**

(Signature of person mailing paper)

UNITED STATES PATENT AND TRADEMARK OFFICE

UNITED STATES DEPARTMENT OF COMMERCE
United States Patent and Trademark Office
Address: COMMISSIONER FOR PATENTS
P.O. Box 1450
Alexandria, Virginia 22313-1450
www.uspto.gov

| APPLICATION NUMBER | FILING OR 371 (c) DATE | FIRST NAMED APPLICANT | ATTORNEY DOCKET NUMBER |
|---|---|---|---|
| 11/504,981 | 08/15/2006 | Vijay Gupta | UC03-126-2US |

**CONFIRMATION NO. 4584**

**FORMALITIES LETTER**

8156
JOHN P. O'BANION
O'BANION & RITCHEY LLP
400 CAPITOL MALL SUITE 1550
SACRAMENTO, CA 95814

Date Mailed: 08/30/2006

## NOTICE TO FILE MISSING PARTS OF NONPROVISIONAL APPLICATION

**FILED UNDER 37 CFR 1.53(b)**

***Filing Date Granted***

**Items Required To Avoid Abandonment:**

An application number and filing date have been accorded to this application. The item(s) indicated below, however, are missing. Applicant is given **TWO MONTHS** from the date of this Notice within which to file all required items and pay any fees required below to avoid abandonment. Extensions of time may be obtained by filing a petition accompanied by the extension fee under the provisions of 37 CFR 1.136(a).

- The statutory basic filing fee is missing.
  *Applicant must submit $* **150** *to complete the basic filing fee for a small entity.*
- The oath or declaration is missing. *A properly signed oath or declaration in compliance with 37 CFR 1.63, identifying the application by the above Application Number and Filing Date, is required.*
  *Note: If a petition under 37 CFR 1.47 is being filed, an oath or declaration in compliance with 37 CFR 1.63 signed by all available joint inventors, or if no inventor is available by a party with sufficient proprietary interest, is required.*

The applicant needs to satisfy supplemental fees problems indicated below.

The required item(s) identified below must be timely submitted to avoid abandonment:

- Additional claim fees of **$525** as a small entity, including any required multiple dependent claim fee, are required. Applicant must submit the additional claim fees or cancel the additional claims for which fees are due.
- To avoid abandonment, a surcharge (for late submission of filing fee, search fee, examination fee or oath or declaration) as set forth in 37 CFR 1.16(f) of $65 for a small entity in compliance with 37 CFR 1.27, must be submitted with the missing items identified in this letter.

**SUMMARY OF FEES DUE:**

Total additional fee(s) required for this application is **$1090** for a small entity

- **$150** Statutory basic filing fee.

- **$65** Surcharge.

- The application search fee has not been paid. Applicant must submit **$250** to complete the search fee.
- The application examination fee has not been paid. Applicant must submit **$100** to complete the examination fee for a small entity in compliance with 37 CFR 1.27.

- Total additional claim fee(s) for this application is **$525**

  - **$100** for **1** independent claims over 3.
  - **$425** for **17** total claims over 20.

Replies should be mailed to: Mail Stop Missing Parts
Commissioner for Patents
P.O. Box 1450
Alexandria VA 22313-1450

---

***A copy of this notice MUST be returned with the reply.***

TQUACH

Office of Initial Patent Examination (571) 272-4000, or 1-800-PTO-9199, or 1-800-972-6382
PART 3 - OFFICE COPY

Attorney's Docket No.: UC03-126-2US

14230 U.S. PTO
081506

113241 U.S. PTO
11/504981
081506

**IN THE UNITED STATES PATENT AND TRADEMARK OFFICE**

**Commissioner for Patents**
**P.O. Box 1450**
**Alexandria, VA 22313-1450**

# PATENT APPLICATION TRANSMITTAL

Transmitted herewith for filing is the patent application of Inventor(s):

VIJAY GUPTA; VASSILI A. KIREEV

For (title):

GLASS-MODIFIED STRESS WAVES FOR SEPARATION OF ULTRA THIN FILMS AND NANOELECTRONICS DEVICE FABRICATION

**1. Type of Application**

(check all applicable)

X Utility
_ Design
_ Plant
_ Divisional
_ Continuation
X Continuation of PCT designating US
_ Continuation-in-part (CIP)

---

**CERTIFICATION UNDER 37 CFR 1.10**

I hereby certify that this New Application Transmittal and the documents referred to as enclosed therein are being deposited with the United States Postal Service on this date 8/15/06 in an envelope as "Express Mail Post Office to Addressee" Mailing Label Number EV857125075 addressed to the: Commissioner for Patents, P.O. Box 1450, Alexandria, VA 22313-1450.

John P. O'Banion
**(Type or print name of person mailing paper)**

**(Signature of person mailing paper)**

NOTE: Each paper or fee referred to as enclosed herein has the number of the "Express Mail" label placed thereon prior to mailing. 37 CFR 1.10(b).

---



Boeing Ex. 1002, p. 125 of 177
Boeing v. Regents Univ. Cal.

2. **Papers Enclosed Which Are Required For Filing Date Under 37 CFR 1.53(b) (Regular) or 37 CFR 1.153 (Design) Application**

23 Pages of specification

6 Pages of claims

1 Pages of Abstract

12 Sheets of drawing

X formal

_ informal

_ The enclosed drawing(s) include photograph(s), and there is also attached a "PETITION TO ACCEPT PHOTOGRAPH(S) AS DRAWING(S)." 37 C.F.R. 1.84(b).

**42 TOTAL PAGES (IF OVER 100 PAGES, EXCESS FEES ARE DUE)**

3. **Additional papers enclosed**

_ Preliminary Amendment

_ Information Disclosure Statement

X Form PTO – 1449 or equivalent

_ Citations

_ Authorization of Attorney(s) to Accept and Follow Instructions from Representative

_ Special Comments

_ Other (SPECIFY)

4. **Declaration Or Oath**

_ Enclosed

executed by:

_ inventor(s)

_ legal representative of inventor(s). 37 CFR 1.42 or 1.43.

_ joint inventor or person showing a proprietary interest on behalf of inventor who refused to sign or cannot be reached.

_ this is the petition required by 37 CFR 1.47 and the statement required by 37 CFR 1.47 is also attached. (See item 15 below for fee.)



Boeing Ex. 1002, p. 126 of 177
Boeing v. Regents Univ. Cal.

__ Copy from a prior application (37 CFR 1.63(d)) (divisional or continuation only)

X Not Enclosed. Application is made by a person authorized under 37 CFR 1.41(c) on Behalf of all of the above named inventor(s).

(The declaration or oath, along with the surcharge required by 37 CFR 1.16(e) can be filed subsequently).

**5. Inventorship Statement**

The inventorship for all the claims in this application are:

X The same

**or**

__ Are not the same. An explanation, including the ownership of the various claims at the time the last claimed invention was made,

__ is submitted.

__ will be submitted.

**6. Language**

X English

__ non-English

__ the attached translation is a verified translation. 37 CFR 1.52(d).

**7. Further Inventorship Statement Where Benefit of Prior Application(s) Claimed**

NOTE: "If the continuation, continuation-in-part, or divisional application is filed by less than all the inventors named in the prior application, a statement must accompany the application when filed requesting deletion of the names of the person or persons who are not inventors of the invention being claimed in the continuation, continuation-in-part, or divisional application." 37 CFR 1.62(a) [emphasis added] (dealing with the file wrapper continuation situation).

NOTE: "In the case of a continuation-in-part application which adds and claims additional disclosure by amendment, an oath or declaration as required by § 1.63 must be filed. In those situations where a new oath or declaration is required due to additional subject matter being claimed, additional inventors may be named in the continuing application. In a continuation or divisional application which discloses and claims only subject matter disclosed in a prior application, no additional oath or declaration is required and the application must name as inventors the same or less than all the inventors in the prior application." 37 CFR 1.60(c). (dealing with the continuation situation).

(complete applicable item (a) or (b) below)

(a) X This application discloses and claims only subject matter disclosed in the prior application and the inventor(s) in this application are

X the same

__ less than those named in the prior application and it is requested that the following inventor(s) identified above for the prior application be deleted:

Name:
Name:



Boeing Ex. 1002, p. 127 of 177
Boeing v. Regents Univ. Cal.

(b) ___ This application discloses and claims additional disclosure and a new declaration or oath is being filed. With respect to the prior application whose particulars are set out above, the inventors in this application are

___ the same

___ add the following inventors

Name:
Name:

**8. Maintenance of Copendency of Prior Application**

NOTE: The PTO finds it useful if a copy of the petition filed in the prior application extending the term for response is filed with the papers constituting the filing of the continuation application. Notice of November 5, 1985 (1060 O.G. 27).

___ Extension of time in prior application

(This item must be completed and the necessary papers filed in the prior application if the period set in the prior application has run)

___ A petition, fee and response has been filed to extend the term in the prior application until _____.

___ A copy of the petition for extension of time in the prior application is attached.

(complete this item and file conditional petition in prior application if previous item not applicable)

___ Conditional Petition For Extension Of Time In Prior Application

___ A conditional petition for extension of time is being filed in the pending prior application.

**9. Fee Calculation (37 CFR 1.16)**

X **Utility Application**

| | | |
|---|---|---|
| **Basic Fee** | **$300** | $ 300 |
| **Search Fee** | **$500** | $ 500 |
| **Examination Fee** | **$200** | $ 200 |
| **Application Size Fee** | **$250** for each 50 page block above 100 pages) | $ _____ |

| | Number filed | | | Number Extra | | Rate | | |
|---|---|---|---|---|---|---|---|---|
| Total Claims | 37 | - 20 | = | 17 | X | $ 50 | = | 850 |
| Independent Claims | 4 | - 3 | = | 1 | X | $200 | = | 200 |
| Multiple Dependent Claim Present | | | | | + | $360 | = | |

___ Preliminary Amendment canceling extra claims enclosed
___ Amendment deleting multiple-dependencies enclosed

**Total Fees** $ 2250



Boeing Ex. 1002, p. 128 of 177
Boeing v. Regents Univ. Cal.

__ **Design Application**

| | | |
|---|---|---|
| **Basic Fee** | **$200** | $ _____ |
| **Search Fee** | **$100** | $ _____ |
| **Examination Fee** | **$130** | $ _____ |
| **Application Size Fee** | **$250** for each 50 page block above 100 pages) | $ _____ |
| | **Total Fees** | $ _____ |

**10. Small Entity Statement**

X Applicant qualifies as a small entity under 37 CFR 1.9 and 1.27

Filing Fee Calculation (50% of above) $ 1125

**11. Fee Payment Being Made At This Time**

X Not Enclosed

X No filing fee is to be paid at this time. (This and the surcharge required by 37 CFR 1.16(e) can/will be paid subsequently.)

__ Enclosed

__ filing fees $ _____

__ petition fee for filing by other than all the inventors or person on behalf of the inventor where inventor refused to sign or cannot be reached. ($130.00) $ _____

__ for processing an application with a specification in a non-English language. ($130.00) $ _____

__ processing and retention fee ($130.00) $ _____

Total Fees Enclosed $ _____

**12. Method of Payment of Fees**

__ Check in the amount of $ _____

__ Charge Account No. _____ in the amount of $ _____.
A duplicate of this transmittal is attached.

**13. Authorization to Charge Additional Fees**

__ The Commissioner is hereby authorized to charge the following additional fees by this paper and during the entire pendency of this application to Account No. _____;

__ 37 CFR 1.16(a), (f) or (g) (filing fees)

__ 37 CFR 1.16(b), (c) and (d) (presentation of extra claims)



Boeing Ex. 1002, p. 129 of 177
Boeing v. Regents Univ. Cal.

_ 37 CFR 1.16(e) (surcharge for filing the basic filing fee and/or declaration on a date later than the filing date of the application)

_ 37 CFR 1.18 (application processing fees)

_ 37 CFR 1.18 (issue fee at or before mailing of Notice of Allowance, pursuant to 37 CFR 1.311(b))

**14. Instructions As To Overpayment**

X credit Deposit Account No. 07-1137

_ refund

**15. Incorporation By Reference of Papers Identified Herein**

Applicant(s) hereby incorporate(s) by reference all papers which are identified in this New Application Transmittal.

**16. Correspondence Address**

**Please use the following correspondence address for all communications:**

**CUSTOMER NUMBER 8156**

**John P. O'Banion, Reg. No. 33,201**
**O'BANION & RITCHEY LLP**
**400 Capitol Mall, Suite 1550**
**Sacramento, CA 95814**
**(916) 498-1010**

**17. Signature of Attorney**

Dated: 8/15/06

SIGNATURE OF ATTORNEY
John P. O'Banion, Reg. No. 33,201
CUSTOMER NUMBER 8156



Boeing Ex. 1002, p. 130 of 177
Boeing v. Regents Univ. Cal.

## CERTIFICATION UNDER 37 CFR 1.10

I hereby certify that the foregoing:

U.S. Patent Application

1. Specification (pages 1-23)
2. Claims (pages 24-29)
3. Abstract (page 30)
4. Drawings (sheets 1-12)

is being deposited with the United States Postal Service on 8/15/06 in an envelope as "Express Mail Post Office to Addressee" Mailing Label Number EV857125075US addressed to the: Commissioner for Patents, P.O. Box 1450, Alexandria, VA 22313-1450.

JOHN P. O'BANION

**(Type or print name of person mailing paper)**

(Signature of person mailing paper)

# GLASS-MODIFIED STRESS WAVES FOR SEPARATION OF ULTRA THIN FILMS AND NANOELECTRONICS DEVICE FABRICATION

## CROSS-REFERENCE TO RELATED APPLICATIONS

**[0001]** This application claims priority from, and is a 35 U.S.C. § 111(a) continuation of, co-pending PCT international application serial number PCT/US2005/007304, filed on March 7, 2005, incorporated herein by reference in its entirety, which designates the U.S., which claims priority from U.S. provisional application serial number 60/550,803 filed on March 5, 2004, incorporated herein by reference in its entirety.

## STATEMENT REGARDING FEDERALLY SPONSORED RESEARCH OR DEVELOPMENT

**[0002]** This invention was made with Government support under Grant No. DAAD19-00-1-0491 awarded by the Army Research Office. The Government has certain rights in this invention.

## INCORPORATION-BY-REFERENCE OF MATERIAL SUBMITTED ON A COMPACT DISC

**[0003]** Not Applicable

## NOTICE OF MATERIAL SUBJECT TO COPYRIGHT PROTECTION

**[0004]** A portion of the material in this patent document is subject to copyright protection under the copyright laws of the United States and of other countries. The owner of the copyright rights has no objection to the facsimile reproduction by anyone of the patent document or the patent disclosure, as it appears in the United States Patent and Trademark Office publicly available file or records, but otherwise reserves all copyright rights whatsoever. The copyright owner does not hereby waive any of its rights to have this patent document maintained in secrecy, including without limitation its rights pursuant to 37 C.F.R. § 1.14.



Boeing Ex. 1002, p. 132 of 177
Boeing v. Regents Univ. Cal.

## BACKGROUND OF THE INVENTION

1. Field of the Invention

[0005] This invention pertains generally to the application of a coating onto fibers or flat substrates, and more particularly to an improved method and system for generating spallation of ultra thin films and measuring the interface tensile strength between a substrate and the thin film.

2. Description of Related Art

[0006] Films and coatings have widespread use in different industries. Examples include thermal barrier coatings for engines; tribological coatings in cutting tools, seals, and joints; polymeric layers in paint assemblies; fiber coatings in composites; electrical, magnetic and optical multilayers in electronic devices; metal and ceramic films in MEMS-based mechanical and clinical devices, among others. In the field of composite materials, the interface between a thin coating and a fiber is considered for deflecting impinging matrix cracks. In the field of tribology, interfaces between various types of functional coatings, e.g., magnetic, conducting, optical, or electrical, protective coatings, e.g., thermal barrier, corrosion, or wear resistant, or decorative coatings and their underlying substrates are of interest.

[0007] In the foregoing various applications, the tensile strength of the interface is an important property that directly controls the interface decohesion process, and often controls the usefulness and reliability of the coating component. Adhesion of films is a prerequisite to carryout their intended functions. Thus, the central goal in all these applications is to avoid film delamination and coating failures by maximizing adhesion, and to predict long-term reliability of the coated components. Additionally, the measurement of the interface tensile strength is of importance for reliable performance of the coating in the above applications. These issues are usually addressed by seeking a fundamental understanding of the adhesion between different layers as a function of process (film deposition and surface variables) and service (moisture and temperature) variables.



Boeing Ex. 1002, p. 133 of 177
Boeing v. Regents Univ. Cal.

[0008] These objectives are currently accomplished using adhesion metrology tools, such as the laser spallation technique commonly applied in the art. Typically, a high energy laser pulse is made to impinge upon a planar arrangement of a confining plate, a metallic layer, a substrate plate, and a coating combination. The laser pulse impinges on a thick metal film that is sandwiched between the back surface of a substrate of interest and a fused quartz confining plate that is transparent to the wavelength of the laser. Normally, gold or aluminum is used as the laser absorbing film. Absorption of the laser energy in the confined gold leads to a sudden expansion of the film which, due to the axial constraints of the assembly, leads to the generation of a compressive shock wave directed towards the test coating interface. A part of the compressive pulse is transmitted into the coating as the compression pulse strikes the interface. It is the reflection from the free surface of the coating of this compressive pulse into a tension pulse that leads to the removal of the coating, given a sufficiently high amplitude.

[0009] United States Patent No. 5,438,402 provides significant improvement in the art to determine the tensile strength of planar interfaces down to 1 micrometer in thickness. However, ultra-thin layers with thickness below 0.5 micrometers are now the focus of research in the microelectronics industry for developing ultrahigh density devices using nanotechnology. In addition, adhesion at similar length scales will become important in the material optimization of MEMS-based mechanical and clinical devices when they are mass-produced. Therefore, there is a need to extend measurement capabilities to films below 0.5 μm in thickness.

[0010] Accordingly, an object of the present invention is to measure the tensile strength of interfaces between such very thin films.

[0011] Another object is to separate and lift thin film lines or their complete structures from semiconductor and engineering substrates using glass-modified stress waves, and catch them on desired substrates for reconstructing structures. This can lead to a faster way of fabricating MEMS and nano-scale devices by bypassing the currently used wet-etching



Boeing Ex. 1002, p. 134 of 177
Boeing v. Regents Univ. Cal.

techniques. At least some of these objectives will be met in the following invention.

## BRIEF SUMMARY OF THE INVENTION

**[0012]** An aspect of the invention is an apparatus for generating a tensile stress between a substrate and a coating, wherein the substrate has a thickness defined by a first side and a second side in a first axis, and the coating is applied to the first side of the substrate such that the coating and substrate are axially spaced along the first axis in intimate facing contact with each other to form a coating/substrate interface. The apparatus has a glass element disposed on the second side of the substrate and axially spaced along the first axis. The glass element is configured to propagate a stress wave to the coating/substrate interface to generate a tensile force or stress between the substrate and the coating.

**[0013]** In a preferred mode of the present aspect, the tensile stress is configured to separate the coating from the substrate at the coating/substrate interface. Generally, the stress waves have a length ranging from approximately 5 nanoseconds to approximately 100 nanoseconds. Ideally, the stress waves comprise a rarefaction shock formation. The glass substrate is configured to allow separation of a coating having a thickness less than approximately 0.5 μm. However, the present invention may also be used on a variety of coatings with thickness greater than approximately 0.5 μm.

**[0014]** In one embodiment, the glass is configured to propagate the stress wave as a result of impingement by a Nd-Yag laser beam directed in the first axis. Typically, the glass element is bonded to the second side of the substrate. The glass element may comprise Pyrex, sodalime, quartz, borosilicate or similar material. The glass element may have any thickness, but preferably has a thickness ranging from approximately 0.1 mm to approximately 5 mm.

**[0015]** In some embodiments, the apparatus may further include a constraining element disposed adjacent to the glass element. In addition, an energy absorbing layer may be disposed between the constraining layer and



Boeing Ex. 1002, p. 135 of 177
Boeing v. Regents Univ. Cal.

the glass element.

[0016] Another aspect of the invention comprises a method for separating a coating from a substrate, the substrate having a first side and a second side transversely disposed in a first axis, where the coating is applied to the first side of the substrate such that the coating and substrate are axially spaced along the first axis in intimate facing contact to form a coating/substrate interface. The method comprises the steps of positioning a glass element along the first axis on the second side of the substrate, directing a laser pulse in the first axis at the glass element, propagating a stress wave through the glass element to the coating/substrate interface to generate a tensile stress between the substrate and the coating, and separating the coating from the substrate as a result of the stress wave-generated tensile stress.

[0017] In a preferred embodiment, the propagated stress wave has a length configured to separate a coating having a thickness less than approximately 0.5 μm.

[0018] In another embodiment, the method further includes positioning a glass element along the first axis comprises bonding the glass element to the second side of the substrate. In addition, a constraining element may be placed adjacent to a free side of the glass element. The method may further include coating an energy absorbing layer on the free side of the glass element between the constraining layer and the glass element such that directing a laser pulse in the first axis comprises directing the laser pulse the energy absorbing layer coated on the glass element.

[0019] In one mode of the present aspect, the stress generated by the stress wave at the coating/substrate interface exceeds approximately 1.0 GPa. In particular, the stress generated by the stress wave at the coating/substrate interface exceeds approximately 2.0 GPa.

[0020] In yet another aspect of the invention, an apparatus is disclosed for separating a nanostructure from a first substrate, the nanostructure attached to a front side of the first substrate. The apparatus comprises a glass element disposed on a back side of the first substrate opposite the nanostructure a



Boeing Ex. 1002, p. 136 of 177
Boeing v. Regents Univ. Cal.

laser source, a Nd-Yag laser, configured to direct a laser beam at the glass element. The glass element is configured to propagate a stress wave to the nanostructure as a result of impingement by the laser beam to generate a tensile stress between the nanostructure and the first substrate to separate the nanostructure from the first substrate.

**[0021]** In one mode of the current aspect, the apparatus further comprises a second substrate located opposite the front side of the first substrate where the second substrate is configured to receive the nanostructure once separated from the first substrate.

**[0022]** In a preferred embodiment, the apparatus further includes an adhesive layer disposed on the second substrate. The adhesive layer is generally configured to form a bond between the nanostructure and the second substrate. One or more spacers may further be included to separate the first substrate from the second substrate.

**[0023]** In a further aspect, an apparatus for transferring a silicon platform to a receiving substrate comprises a glass substrate disposed on a back side of the silicon platform, and a laser source configured to direct a laser beam at the glass element. The glass element is configured to generate a tensile stress between the silicon platform and the glass substrate as a result of impingement by the laser beam such that the tensile stress launches the silicon platform to the receiving substrate.

**[0024]** In one mode of the current aspect, an energy absorbing layer may be positioned adjacent the glass substrate opposite from the silicon platform, such that the energy absorbing layer and the glass substrate are configured to propagate a stress wave across the glass substrate to generate the tensile stress between the silicon platform and the glass substrate.

**[0025]** In another mode without an energy absorbing layer, the laser beam passes through the glass substrate to generate the tensile stress between the silicon platform and the glass substrate.

**[0026]** In many embodiments, the silicon platform comprises one or more circuits. The silicon platform may also comprise a thin Si film.



Boeing Ex. 1002, p. 137 of 177
Boeing v. Regents Univ. Cal.

[0027] In another mode, the receiving substrate comprises a polymer. The receiving substrate may also be spun coated with a polymer film.

[0028] Further aspects of the invention will be brought out in the following portions of the specification, wherein the detailed description is for the purpose of fully disclosing preferred embodiments of the invention without placing limitations thereon.

## BRIEF DESCRIPTION OF THE SEVERAL VIEWS OF THE DRAWINGS

[0029] The invention will be more fully understood by reference to the following drawings which are for illustrative purposes only:

[0030] FIG. 1 is a schematic diagram of a laser spallation tensile strength measuring system using a laser Doppler displacement interferometer.

[0031] FIG. 2A shows a test setup for testing adhesion characteristics of prior art thin film samples.

[0032] FIG. 2B illustrates an expanded view of a cross-section of a prior art thin film sample assembly.

[0033] FIG. 3 illustrates measured stress pulse profiles in silicon at increasing laser fluence.

[0034] FIG. 4 is a cross-section view of an exemplary thin-film sample assembly in accordance with the present invention.

[0035] FIG 5A shows a graph of stress wave profiles in soda lime glass under increasing laser fluence.

[0036] FIG. 5B shows a graph comparing the stress wave profile of soda lime glass with that of Si.

[0037] FIG. 6 shows a graph of stress wave profiles in different types of glass.

[0038] FIG. 7A is a photo depicting the failure locus in a Cu/TiN/Si system without glass.

[0039] FIG. 7B is a photo depicting the failure locus in a Cu/TiN/Si system with glass.



Boeing Ex. 1002, p. 138 of 177
Boeing v. Regents Univ. Cal.

[0040] FIG. 8A shows a graph comparing the surface velocity profiles of the systems of FIG. 7A and 7B.

[0041] FIG. 8b shows a graph comparing the stress history at the Cu/TiN interface of the systems of FIG. 7A and 7B.

[0042] FIGS. 9A and 9B illustrate a schematic of a nanowire separation and retrieval assembly 200 in accordance with the present invention

[0043] FIG. 10A is a cross sectional view of a multi-layer plastic substrate having lead bumps in accordance with the present invention.

[0044] FIG. 10B is a photo illustrating the stress wave separated lead bumps caught on a flexible plastic tape in accordance with the present invention.

[0045] FIG. 11 shows a focused view of the separated lead bumps in their entirety.

[0046] FIG. 12 illustrates an alternative embodiment of the present invention with a polysilicon surface spun coated with a polymer film.

[0047] FIG. 13 illustrates another embodiment of the invention using a polymer foil.

## DETAILED DESCRIPTION OF THE INVENTION

[0048] Referring more specifically to the drawings, for illustrative purposes the present invention is embodied in the apparatus generally shown in FIG. 4 through FIG. 6 and FIG. 7B through FIG. 13. It will be appreciated that the apparatus may vary as to configuration and as to details of the parts, and that the method may vary as to the specific steps and sequence, without departing from the basic concepts as disclosed herein.

[0049] The apparatus and methods of the current invention measure the tensile strength (adhesion) of very thin film interfaces (thickness less than 0.5 micrometers), and their multilayers deposited on engineering substrates. The present invention achieves separation and lift of thin film lines or their complete structures from semiconductor and engineering substrates using glass-modified stress waves. Apparatus and methods are further disclosed to catch these thin films or structures on desired substrates for reconstructing structures. This can lead to a faster way of fabricating MEMS and nano-scale



Boeing Ex. 1002, p. 139 of 177
Boeing v. Regents Univ. Cal.

devices by bypassing the currently used wet-etching techniques. This method can also provide an attractive alternative to create nanocircuitry or microcircuitry.

**[0050]** FIG. 1 illustrates an interface tensile strength measuring system using a laser Doppler displacement interferometer 12 and a laser spallation setup. An input laser 20 generates a pulse beam of light along a first axis. A first optical element 22 is positioned along the first axis to receive the input beam of light. The element 22 collimates the input beam and passes the collimated beam 24 along a second axis substantially parallel to the first axis and in line with sample assembly 16. Sample assembly 16 generally comprises a constraining element, an energy absorbing layer, a substrate element, and a sample coating, which are sequentially spaced along the second axis and disposed transverse thereto.

**[0051]** The laser Doppler displacement interferometer system 12 is a measuring means including a second input laser 34, a first collimating lens L1 positioned so as to receive the laser 34 input beam, and a first stationary mirror M2. The mirror M2 is angularly offset from the first collimating lens L1 to pass the laser beam along a first reflecting axis 38. The first reflecting axis 38 is substantially transverse to the input beam generated by the laser 34. A beamsplitter 28 is disposed along the reflecting axis 38 so as to receive a selected portion of the input beam 38. A portion of the beam incident upon the beamsplitter 28 passes therethrough along a second reflected axis 40. Additionally, a selected portion of the beam that passes along the reflecting axis 38 is directed along a first output axis 41 to a second stationary mirror M1 by the beamsplitter 28. The laser beam that passes along the second reflecting axis 40 is incident upon the free surface of sample assembly 16, and is reflected back along the axis 40 to the beamsplitter 28. The beamsplitter 28 passes a selected portion of the beam reflected from the sample assembly 16 along the second output axis 42. The first and second output axes 41, 42 are disposed transverse to the reflecting axes 38, 40. A second collimating lens L2 is positioned along the second output axis 42 so



Boeing Ex. 1002, p. 140 of 177
Boeing v. Regents Univ. Cal.

as to receive the reflected portion of the beam from the beamsplitter 28. The second collimating lens L2 passes the beam along the second output axis 42 to a photodiode 44. The photodiode 44 is also positioned along the second output axis 42 to receive the reflected beam. The photodiode 44 generates a signal 45 in response to the reflected portion of the beam incident thereon. The photodiode signal 45 is in electrical communication with a digitizer 46. The digitizer 46 also generates an output signal 47 which is in electrical communication with a computer 48.

**[0052]** To measure the vibrations caused in the free surface of the sample assembly 16, the laser Doppler displacement system 12 of FIG. 1 is employed. The laser 34 is actuated to produce a laser beam along the axis 36. The first collimating lens L1 collimates the beam and passes the beam along to the stationary mirror M2. The mirror M2 is angularly offset with respect to the axis 36. The mirror M2 reflects the laser 34 beam along the reflecting axis 38. The beamsplitter 28 is positioned along the reflecting axis 38 so as to receive the reflected laser beam. The beamsplitter 28 passes a selected portion of the reflected beam along the reflecting axis 40, while simultaneously passing a selected portion of the incident beam along the first output axis 41. In the preferred embodiment, the beamsplitter can be disposed at any angle with respect to the reflecting axis 38, but is preferably at a 45 degree angle thereto. Moreover, the beamsplitter preferably divides the laser beam into two equal beams.

**[0053]** The beam which is reflected from the stationary mirror M1 is the reference beam and the beam reflected from the free surface of the coating 32 along the second axis 40 is the signal beam. The reference beam and the signal beam are intermixed at the beamsplitter 28, and are passed along the second output axis 42. The lens 22, preferably a convex lens, collimates the mixed beam and passes the beam along the axis 42 to the photodiode 42. The photodiode 44 produces a signal 45 that is proportional to the movement, e.g., transient velocity, of the coating free surface. The photodiode 44 output voltage signal is in electrical communication with the digitizer 46. The digitizer



Boeing Ex. 1002, p. 141 of 177
Boeing v. Regents Univ. Cal.

is then actuated to produce an output signal 47 that communicates with the computer 48.

[0054] The digitizer 46 produces a signal 47 corresponding to the fringe record of the photodiode 44. The fringe record is related to the velocity of the sample assembly free surface 16 by the computer 48. The transient velocity of the coating free surface is then related to the interface stress via a series of wave mechanics equations. More specifically, the peak interface tensile stress generated at each level of the laser fluence is related to the maximum free surface velocity via computer 48. Computer 48 takes the stress pulse measured at the substrate's free surface (measured separately) and impinges it upon the interface at the substrate side, and determines the resulting peak tensile amplitudes of the stress (which is normalized via a normalizing factor) at the interface and the coating free surface. The ratio of the foregoing amplitudes comprise the transfer coefficients which are then used to convert the measured peak stress at the coating or the substrate free surface to the interface peak stress.

[0055] FIG. 2A illustrates an experiment using laser spallation techniques commonly used in the art. A 3-nanoseconds (ns) long Nd:YAG laser pulse was directed at sample assembly 50 and made to impinge over a 3 mm-dia area on a 0.5 μm thick aluminum film 52 that is sandwiched between the back surface of a substrate disc (having a 12-25 mm diameter and 1-mm thickness) and a 10 to 20 μm thick layer of $SiO_2$.

[0056] When actuated, the first input laser 20 generates a laser pulse that passes along the first axis to the lens 22. The lens 22 collimates the laser pulse into a collimated beam 24 that is incident upon a constraining layer 50.

[0057] The constraining material 50 is generally transparent to the input laser pulse, thereby transferring the pulse to the energy absorbing aluminum layer 52. Absorption of the laser pulse by the energy absorbing layer 52 leads to a sudden melting-induced expansion of the aluminum layer 52 which, due to the axial constraints of the assembly, e.g., the constraining material 54 and the substrate 56, generates a compressive shock wave or pulse directed towards



Boeing Ex. 1002, p. 142 of 177
Boeing v. Regents Univ. Cal.

the substrate 56 and the test coating 58, which is deposited on the substrate 56 front surface.

**[0058]** As illustrated in FIG. 2B, the compressive stress pulse propagating through the substrate 56 is incident upon the interface between the substrate 56 and the test coating or sample 58. A part of the compressive pulse is transmitted into the coating as the compression pulse strikes the interface. The compressive pulse reaches the coating free surface 60 where it is reflected, thereby forming a tension pulse T. The interface tensile stress is obtained by measuring the transient displacement history of the coating's free surface 60 (induced during pulse reflection) by using an optical interferometer 70 a schematic of which is shown FIG. 2A. It is this formation of the tension pulse T that leads to the removal of the coating 58 from the substrate/coating interface, given a sufficiently high amplitude.

**[0059]** When the stress pulse is reflected from the free surface 60 of the coating 58 or the substrate 56, the particles at the free surface experience a transient velocity, which is proportional to the transient profile of the striking stress pulse. This transient velocity is measured directly by the laser Doppler interferometer system 70 of FIG. 2A. Doppler interferometer system 70 comprises a second input (Ar Ion) laser 72, a series of collimating lenses, mirrors M1-M3, and a photodiode 74 and digitizer 76.

**[0060]** For a coating of density ρ and thickness *h,* the interface stress δ is calculated from the measured transient velocity *v(t)* as:

$$\delta\,(h,t) = 1/2\,\rho c[v(t+h/c) - v(t-h/c)]$$

where *c* is the longitudinal stress wave velocity in the film.

**[0061]** Laser-generated stress wave profiles that are used to decohere films in the basic technology discussed above are reproduced in Fig. 3. These measurements were made with a Si wafer substrate. The rise and post-peak decay time do not change significantly with increasing stress pulse amplitudes obtained at increasing laser fluences. A typical stress pulse profile has a rise-time of 1-2 ns, and a gradual post-peak decay of about 16-20 ns. However, stress waves up to several hundred nanoseconds can be generated in



Boeing Ex. 1002, p. 143 of 177
Boeing v. Regents Univ. Cal.

composite substrates. If the film is very thin compared to the length of the stress wave, then the tail end of the initial compression pulse is still at the interface while its front end has returned as a tensile wave after reflecting from the film's free surface. Because of destructive interference, the peak interfacial tensile stress is always less than the amplitude of the initial compression wave.

**[0062]** The amplitude of the peak interface tensile stress decreases non-linearly with the film thickness, the rise-time and post-peak decay time of the stress pulse, and becomes zero in the limiting case of zero film thickness. Thus, for thin layers, the peak interfacial tensile stress can be much lower than the peak tensile stress inside the substrate. For intrinsically strong interfaces, such a condition usually leads to failure within the substrate before the desired interface can be separated.

**[0063]** Table I summarizes interface tensile strength measurements using the basic laser spallation technique for a Cu/TaN bilayer system with the coating 58 sputter-deposited on the Si wafer substrate 56. Failure was observed inside the Si substrate 56 for the first three samples because of insufficient film thickness of coating 58. A consistency in the peak tensile stress inside the Si substrate for these samples was noted, indicating a tensile strength of Si of 5 GPa. For these samples the Si/TaN interface tensile stress is rather low, and below its interfacial strength. As the film thickness was increased, the failure locus changed from the substrate to the interface. Consistently, the peak tensile stress inside Si was lower than its strength measured in previous samples. The interface strength was found to be the same for the last two samples, indicating that if the interface chemistry is the same for films of varying thicknesses then the experiment measures the same fundamental strength. Thus, the interface strength can be measured in ultra thin film samples by simply increasing the film thickness or adding another layer on top to provide enough "room" for the reflecting compression pulse.

**[0064]** However, because of issues related to possible film structure and chemistry changes due to increased film thickness in several systems, the



Boeing Ex. 1002, p. 144 of 177
Boeing v. Regents Univ. Cal.

preferred way is always to test films in their initial low thickness state or in the same form as to be used in actual service devices and applications. Accordingly, successful spallation of ultra thin films (thickness less than 0.5 μm) and consequential and measurement their adhesion has become increasingly important.

**[0065]** Using a finite element-based simulation, Yuan and Gupta (1993) showed that for a given coating thickness the post-peak decay time is the most critical in maximizing the interfacial tensile stress. Indeed, if the post-peak decay time is reduced to zero, i.e. the wave profile has a "rarefaction shock," then the interface tensile stress for a film of arbitrarily small thickness theoretically will equal the amplitude of the incoming compression pulse. In accordance with the present invention, this theoretical possibility has been realized experimentally with sample assemblies using glass layers.

**[0066]** FIG. 4 illustrates an exemplary sample assembly 100 in accordance with the present invention. The sample assembly 100 comprises a constraining element 102, an energy absorbing layer 104, a glass substrate element 106, a silicon substrate element 108, and a coating 110 having a free surface 112, all sequentially spaced along an axis and disposed transverse thereto and in intimate facing contact.

**[0067]** As shown in FIG. 4, Nd-Yag laser pulse 114 is directed at the sample assembly 100 generally transverse to the constraining layer 102. The laser pulse passes through the water-glass constraining layer 102 to impinge and heat up energy-absorbing aluminum layer 104. Subsequent expansion of the aluminum layer 104 generates a compressive shock wave or pulse that propagates through the glass substrate 106 and silicon substrate 108. The pulse wave is transmitted into the coating 110 to form a tension pulse.

**[0068]** The energy absorbing layer 104 may be composed of a variety of metallic or non-metallic materials such as gold or germanium or even ordinary black scotch tape, but is preferably composed of a thin aluminum film. The constraining element 102 is preferably composed of solid water glass and is between 5 micrometers and 100 micrometers thick; and preferably 5



Boeing Ex. 1002, p. 145 of 177
Boeing v. Regents Univ. Cal.

micrometers. The constraining element may also comprise a number of other compositions with similar qualities known in the art, such as 2-propanol, water, silicon dioxide. In alternative embodiments, the constraining element may even comprise transparent scotch tape.

**[0069]** The silicon substrate 30 is preferably circular in nature and is composed of a single crystal silicon (Si) wafer that is between 10 millimeters and 30 millimeters in diameter, and preferably, 1 millimeter thick. The sample coating 32 may be less than 0.5 micrometers thick.

**[0070]** The stress waves were measured with glass substrate elements 108 comprising Pyrex, sodalime, quartz, and borosilicate glasses using the experimental procedure that is embodied in FIG. 1 and US Patent No. 5,438,402, incorporated herein by reference in its entirety. To define the entering stress wave profile in the glass specimen accurately, these tests were performed by bonding the glass slides of nominal 1.0mm thickness to 0.7mm thick Si wafers using a 0.5 μm -thick optical grade EPOTECH 301 FL epoxy. The stress wave was generated inside the Si by exfoliating a waterglass-constrained Al film 104 in a manner discussed above. For interferometeric measurements, a 400Å layer of Al was deposited on the free surface of the glass.

**[0071]** FIGS. 5A and 5B shows a series of stress pulse profiles with increasing laser fluence, measured with a glass substrate element 108 comprising soda lime glass. As illustrated in FIG. 5A, at low stress amplitudes, the profiles are similar to that in Si and other materials, having a finite rise-time and gradual post-peak decay. However, as the stress pulse amplitude exceeds a certain threshold, the rise-time of the stress wave 120 gets longer but the post-peak stress profile starts 122 to decay rather quickly. Ultimately, a profile is attained with the post-peak stress dropping virtually instantaneously (the drop time is within the resolution limit of our instrumentation), much like a "rarefaction shock." The modification in the stress wave profile as a result of the glass substrate element sample assembly 100 compared with a sample assembly having only a Si substrate is shown in FIG. 5B.



Boeing Ex. 1002, p. 146 of 177
Boeing v. Regents Univ. Cal.

[0072] FIG. 6 shows the pulse profiles measured with Pyrex, soda lime, quartz, and borosilicate glasses as glass substrate elements 108. The magnitude of the above effect was found to vary from glass to glass, but all showed the formation of the rarefaction shock.

[0073] Previous investigators using plate impact setups were unable to uncover the formation of rarefaction shocks in glasses, since the pulse lengths in their work were larger than the specimen thickness. As suggested above, the rarefaction shock effect develops due to the finite propagation distance of the pulse into the material. This became possible in the setup of the present invention is able to achieve these results because of the short length (~0.1 mm) of the stress waves compared with the specimen thickness (~1 mm).

[0074] To demonstrate the use of glass-modified stress waves, the sample sets summarized in Table II were prepared. All films (coating 110) were sputter deposited onto the substrate, with thickness indicated in the table. The stress waves were directly generated inside the glass. Consistent with the laser spallation procedure, the free surface of the glass was coated with a 0.5μm - thick Al film and constrained from top using a 40-50 μm -thick layer of water glass. The TiN/glass, and the Ni/glass systems, which have interest in display technology, were chosen to demonstrate the applicability of the glass-modified waves in decohering very thin film interfaces.

[0075] In addition to the glass substrates, a Cu(1400nm)/TiN(70nm) bilayer system was deposited as the coating 112 on the free surface of the Si substrate wafer 108. Previously, when the stress pulse was directly generated inside the Si wafer, failure within Si was observed, as shown in sample 1 in Table II. This, as discussed above, resulted because of the very high strength of the interface.

[0076] In testing the present invention, the coating-free surface of the Si substrate 108 was bonded using an UV-cured epoxy to a Pyrex, quartz or borosilicate glass layer 106 to allow loading due to glass-modified waves. Consistent with the spallation procedure, laser-absorbing Al layer 104 was



Boeing Ex. 1002, p. 147 of 177
Boeing v. Regents Univ. Cal.

deposited on the backside of the glass substrate 106 and constrained by a 40-50 mm-thick layer of waterglass 102 from the top. Table II illustrates the failures observed at the interfaces of interest for the various configurations, with specific tensile strength values for each configuration. Table II demonstrates the potential of using glass substrates in accordance with the present invention in measuring the tensile strength of very thin film interfaces. FIGS. 7A and 7B illustrate the contrasting failure locus realized between sample #1 and sample #2 of Table II. As shown in FIG. 7A, the failure locus occurred inside the Si substrate 108 in the Cu(1400nm)/TiN(70nm)/Si system when no glass substrate was used. In contrast, FIG. 7B shows a high magnification view of failure when the glass-modified waves of the present invention were used. The arrow shows the failure to be at the Cu/TiN interface (i.e. within the coating layer 110) with no fracture inside the Si substrate 108. An interface tensile strength value of 2.62 GPa was calculated. This is a rather high value, which was not possible to attain using the basic spallation setup.

**[0077]** The results shown in FIGS. 7A and 7B are quantitatively shown in FIGS 8A and 8B. FIG. 8A shows the measured free surface velocity profiles 130 and 132 achieved from the borosilicate glass modified waves and Si substrate generated waves corresponding to the failures shown in FIGS. 7A and 7B. Accordingly, rarefaction shock behavior was observed in the borosilicate glass modified wave generated profile 132. The interface tensile stress history 134 and 136 corresponding to the borosilicate glass modified wave profile and is substrate profile is shown in FIG. 8B. As can be seen in FIG. 8B, a dramatic increase in the interface tensile stress profile 136 was observed in the glass-modified wave.

**[0078]** A related application that could become significant in the nanotechnology area is the use of these special waves in MEMS and nanoelectronics device fabrication such as manufacturing nanoscale circuits and devices having structures composed of nanowires on electronic substrates (Si, Ge, etc.). Nanocircuitry-based devices are expected to lead to



Boeing Ex. 1002, p. 148 of 177
Boeing v. Regents Univ. Cal.

significantly faster processing speeds than those possible with the current micron-scale-technology. The photolithography technology used today has essentially reached its limit in terms of the smallest feature size that can be manufactured. New ideas for nanowire fabrication include, E-beam etching (which is extremely slow), and anisotropic-lattice-mismatch-based film deposition ideas. In the latter approach, the materials for the film and the substrate are chosen such that there is a substantial lattice mismatch in one direction, and almost none in another. The large mismatch constrains film growth, while encouraging film growth in the zero-lattice-mismatch-direction. This procedure is thus constrained to few selected film/substrate combinations.

**[0079]** FIGS. 9A and 9B illustrate a schematic of a nanowire separation and retrieval assembly 200 in accordance with the present invention. Nanowire 202, which is deposed on specialized substrate 204 for synthesizing nanowire growth, may be separated using the principles of the present invention. As discussed above in FIG. 4, a laser pulse may be directed at the thin Al layer 208 on the free side of the glass substrate 206, causing compression shock waves to propagate through the glass substrate 206 and adjacent silicon substrate 204. The shock waves reflect off of nanowire 202 to generate a tensile force that separates the nanowire 202 from the silicon substrate 204. As discussed above, separation of such thin wires is only possible using the glass-modified waves of the present invention.

**[0080]** As illustrated in FIG. 9B, the separated wires may then be then "caught" or retrieved on a desired electronic substrate 212 located opposite the free surface of the nanowire 202 and separated thereby via spacers 210. The electronic substrate 212 may have either a very thin layer of adhesive 214 or a self-assembled molecular layer. Circuits can then be constructed by repeated use of this procedure. Under this configuration, there are no restrictions on the type of substrate used.

**[0081]** Physical illustration of the system of FIG. 9A is demonstrated on a multilayer plastic substrate 220 having a cross-section as shown in the FIG



Boeing Ex. 1002, p. 149 of 177
Boeing v. Regents Univ. Cal.

10A. The view of FIG. 10B of the top layer shows lead bumps 222 that are used for electrical contacts allowing the Si device to communicate with the substrate circuitry. A laser was impinged onto the undersurface of the plastic substrate 220 in accordance with the present invention to launch the stress wave towards the top layer of the substrate. The stress wave separated the lead bumps 222 and these separated bumps were caught on a flexible plastic tape 226 as shown in FIG. 10B.

**[0082]** The success of this procedure is demonstrated in FIG. 10B and FIG.11, which shows low and high magnification micrographs of the separated lead bumps 222 on the tape 226. It was additionally noted that as the laser energy was increased, separation below the lead bump areas was also accomplished.

**[0083]** Thus, in such cases, the lead bumps 222 along with their underlying film were pulled free from the substrate 220 and caught on the plastic tape 226. The dark region 224 in FIG. 10A is the layer that was below the bumps, which now appears on the very top of the flexible tape substrate 226. FIG. 11 shows a focused view of the separated lead bumps in their entirety.
Yet another application of the glass-modified waves is to make high performance circuits on flexible substrates such as plastics, e.g. for applications in manufacturing of low cost RFID tags, TFT-based high performance computers, and sensor systems.

**[0084]** As shown in FIG. 12, a very high quality polysilicon or a single crystal Si layer 302 may be positioned (over a finite area) on a glass or a quartz substrate 304 using already well-established process variables as described above. The glass substrate 304 may have a silica layer 310 optionally disposed between the silicon layer 302 and the glass substrate 304 on one side, with the aluminum film 306 and waterglass constraining element 308 on the free side of the glass substrate 304.

**[0085]** Already fabricated high performance circuits can be generated first on the Si or a glass platform 304. Next, the entire polysilicon surface 302 may be spun coated with the polymer film, i.e., the "recipient substrate" 312. This



Boeing Ex. 1002, p. 150 of 177
Boeing v. Regents Univ. Cal.

results in a glass/Si/polymer sandwich.

[0086] Instead of spin coating the polymer substrate, an already formed polymer foil 322 could also be placed in closed vicinity of the Si platform 324 (which may comprise one or more circuits), as shown in Fig. 13. A high amplitude compressive stress wave will be generated on the backside of the glass substrate 320 by focusing a Nd:YAG laser pulse 326 onto a 0.5 mm-4 mm-dia area that has a water-glass (328)-constrained Al film 330. The stress wave will directly detach the Si/glass interface to completely transfer the entire Si film, Si platforms, or circuits 324 onto the plastic substrate.

[0087] In yet another embodiment, the Al layer 330 or the constraining waterglass layer 328 on the backside of the substrate 320 may be removed. In this configuration, the laser pulse 326 will go through the glass and directly interact with the Si surface to launch a stress wave. This wave will then pry off the Si/glass interface to transfer the Si platform 324 to the polymer substrate 322 on top. Thus, the mechanism of pattern transfer remains the same in both approaches.

[0088] Although the description above contains many details, these should not be construed as limiting the scope of the invention but as merely providing illustrations of some of the presently preferred embodiments of this invention. Therefore, it will be appreciated that the scope of the present invention fully encompasses other embodiments which may become obvious to those skilled in the art, and that the scope of the present invention is accordingly to be limited by nothing other than the appended claims, in which reference to an element in the singular is not intended to mean "one and only one" unless explicitly so stated, but rather "one or more." All structural, chemical, and functional equivalents to the elements of the above-described preferred embodiment that are known to those of ordinary skill in the art are expressly incorporated herein by reference and are intended to be encompassed by the present claims. Moreover, it is not necessary for a device or method to address each and every problem sought to be solved by the present invention, for it to be encompassed by the present claims. Furthermore, no



Boeing Ex. 1002, p. 151 of 177
Boeing v. Regents Univ. Cal.

element, component, or method step in the present disclosure is intended to be dedicated to the public regardless of whether the element, component, or method step is explicitly recited in the claims. No claim element herein is to be construed under the provisions of 35 U.S.C. 112, sixth paragraph, unless the element is expressly recited using the phrase "means for."



Boeing Ex. 1002, p. 152 of 177
Boeing v. Regents Univ. Cal.

Table I. Effect of Film Thickness on the Failure Mode

| Configuration | Peak Interface Tensile Stress (MPa) | Peak Tensile Stress in the Substrate (MPa) | Failure Locus |
|---|---|---|---|
| Cu[100nm]/TaN[20nm]/Si | 38 ±4 | 5100 | Si Failure |
| Cu[500nm]/TaN[20nm]/Si | 260 ±18 | 4900 | Si Failure |
| Cu[1μm]/TaN[20nm]/Si | 280 ±29 | 5200 | Si Failure |
| Cu[5μm]/TaN[20nm]/Si | 1380 ±110 | 4700 | Interface Failure |
| Cu[10μm]/TaN[20nm]/Si | 1370 ±140 | 4200 | Interface Failure |



Boeing Ex. 1002, p. 153 of 177
Boeing v. Regents Univ. Cal.

Table II. Interface Tensile Strengths Measured Using Glass-Modified Stress Waves.

| Sample No. | Multilayer Configuration | Peak Interface Tensile Stress (MPa) | Peak Tensile Stress in Substrate (MPa) | Failure Locus |
|---|---|---|---|---|
| 1. | Cu(1400nm)/TiN(70nm)/Si | 451 | 5340 | Silicon failure |
| 2. | Cu (1400nm/TiN(70nm/Si Borosilicate glass | 2620±2120 | | Cu/TiN interface |
| 3. | Mo[400nm]/Borosilicate glass | 577±47 | 2624 | Mo/Borosilicate glass interface |
| 4. | Mo[1000nm]/Borosilicate glass | 245±26 | 1050 | Borosilicate glass Failure |
| 5. | Mo[400nm]/Borosilicate glass | 577±33 | 2624 | Mo/Borosilicate glass interface |
| 6. | Mo[400nm]/Pyrex | 135±11 | 1125 | Mo/Pyrex interface |
| 7. | Mo[400nm]/Quartz | 99±8 | 1110 | Mo/Quartz interface |
| 8. | Mo[1000nm]/Borosilicate glass | 233±24 | 980 | Borosilicate glass failure |
| 9. | Mo[1000nm]/Pyrex | 53±6 | 470 | Borosilicate glass failure |
| 10. | Mo[1000nm]/Quartz | 48 ±4 | 460 | Borosilicate glass failure |
| 11. | TiN[320nm]/Borosilicate Glass | 164 ±11 | | TiM/Borosilicate glass interface |
| 12. | Ni[350nm]/Borosilicate Glass | 120 ±13 | | Ni/Borosilicate glass interface |
| 13. | Cr[400nm]/Borosilicate glass | 197 ±16 | 2100 | Cr/Borosilicate glass interface |
| 14. | Mo[1000nm]/Cr[400nm]/ Borosilicate glass | 210 ±19 | 980 | Cr/Borosilicate glass interface |



Boeing Ex. 1002, p. 154 of 177
Boeing v. Regents Univ. Cal.

## CLAIMS

What is claimed is:

1. An apparatus for generating a tensile stress between a substrate and a coating, comprising:

a substrate having a thickness, said thickness defined by a first side and a second side in a first axis;

a coating applied to the first side of the substrate such that the coating and substrate are axially spaced along the first axis in intimate facing contact with each other such to form a coating/substrate interface; and

a glass element disposed on the second side of the substrate and axially spaced along the first axis;

wherein the glass element is configured to propagate a stress wave to the coating/substrate interface to generate a tensile stress between the substrate and the coating.

2. An apparatus as recited in claim 1, wherein the tensile stress is configured to separate the coating from the substrate at the coating/substrate interface.

3. An apparatus as recited in claim 1, wherein the glass is configured to propagate the stress wave as a result of impingement by a Nd-Yag laser beam directed in the first axis.

4. An apparatus as recited in claim 1, wherein the stress wave has a length ranging from approximately 5 nanoseconds to approximately 1 microsecond.

5. An apparatus as recited in claim 4, wherein the stress wave comprises a rarefaction shock formation.



Boeing Ex. 1002, p. 155 of 177
Boeing v. Regents Univ. Cal.

6. An apparatus as recited in claim 1, wherein the coating has a thickness less than approximately 0.5 μm.

7. An apparatus as recited in claim 1, wherein the glass element is bonded to the second side of the substrate.

8. An apparatus as recited in claim 1, wherein the glass element comprises one of the following: Pyrex, sodalime, quartz, or borosilicate.

9. An apparatus as recited in claim 1, wherein the glass element has a thickness ranging from approximately 0.1 mm to approximately 5 mm.

10. An apparatus as recited in claim 1, wherein the substrate comprises silicon.

11. An apparatus as recited in claim 1, further comprising a constraining element disposed adjacent to the glass element.

12. An apparatus as recited in claim 11, further comprising an energy absorbing layer disposed between the constraining layer and the glass element.

13. A method for separating a coating from a substrate, the substrate having a first side and a second side transversely disposed in a first axis, the coating applied to the first side of the substrate such that the coating and substrate are axially spaced along the first axis in intimate facing contact to form a coating/substrate interface, the method comprising:

positioning a glass element along the first axis on the second side of the substrate;

directing a laser pulse in the first axis at the glass element;

propagating a stress wave through the glass element to the coating/substrate interface to generate a tensile force between the substrate and the coating; and



Boeing Ex. 1002, p. 156 of 177
Boeing v. Regents Univ. Cal.

separating the coating from the substrate as a result of the stress wave-generated tensile force.

14. A method as recited in claim 13, wherein directing a laser pulse in the first axis comprises directing a Nd-Yag laser beam in the first axis.

15. A method as recited in claim 13, wherein propagating a stress wave comprises propagating a stress wave having a length ranging from approximately 5 nanoseconds to approximately 1 microsecond.

16. A method as recited in claim 15, wherein the stress wave comprises a rarefaction shock formation.

17. A method as recited in claim 15, wherein the stress wave is configured to separate a coating having a thickness less than approximately 0.5 μm.

18. A method as recited in claim 15, wherein positioning a glass element along the first axis comprises bonding the glass element to the second side of the substrate.

19. A method as recited in claim 13, wherein the glass element comprises one of the following: Pyrex, sodalime, quartz, or borosilicate.

20. A method as recited in claim 19, wherein the glass element has a thickness ranging from approximately 0.1 mm to approximately 5 mm.

21. A method as recited in claim 13, further comprising positioning a constraining element adjacent to a free side of the glass element.

22. A method as recited in claim 21, further comprising:

coating an energy absorbing layer on the free side of the glass element



Boeing Ex. 1002, p. 157 of 177
Boeing v. Regents Univ. Cal.

between the constraining layer and the glass element;

wherein directing a laser pulse in the first axis comprises directing the laser pulse the energy absorbing layer coated on the glass element.

23. A method as recited in claim 13, wherein the stress generated by the stress wave at the coating/substrate interface exceeds approximately 1.0 GPa.

24. A method as recited in claim 23, wherein the stress generated by the stress wave at the coating/substrate interface exceeds approximately 2.0 GPa.

25. An apparatus for separating a nanostructure from a first substrate, the nanostructure attached to a front side of the first substrate, comprising:

a glass element disposed on a back side of the first substrate opposite the nanostructure; and

a laser source configured to direct a laser beam at the glass element;

wherein the glass element is configured to propagate a stress wave to the nanostructure as a result of impingement by the laser beam to generate a tensile stress between the nanostructure and the first substrate to separate the nanostructure from the first substrate.

26. An apparatus as recited in claim 25, wherein the laser source comprises a Nd-Yag laser.

27. An apparatus as recited in claim 25, wherein the glass element comprises one of the following: Pyrex, sodalime, quartz, or borosilicate.

28. An apparatus as recited in claim 25, further comprising an energy absorbing layer disposed between the constraining layer and the glass element.

29. An apparatus as recited in claim 25, further comprising:

a second substrate located opposite the front side of the first substrate;



Boeing Ex. 1002, p. 158 of 177
Boeing v. Regents Univ. Cal.

wherein the second substrate is configured to receive the nanostructure once separated from the first substrate.

30. An apparatus as recited in claim 29, further comprising:

an adhesive layer disposed on the second substrate;

wherein the adhesive layer is configured to form a bond between the nanostructure and the second substrate.

31. An apparatus as recited in claim 29, further comprising one or more spacers separating the first substrate from the second substrate.

32. An apparatus for transferring a silicon platform to a receiving substrate, comprising:

a glass substrate disposed on a back side of the silicon platform; and

a laser source configured to direct a laser beam at the glass element;

wherein the glass element is configured to generate a tensile stress between the silicon platform and the glass substrate as a result of impingement by the laser beam; and

wherein said tensile stress is configured to launch the silicon platform to the receiving substrate.

33. An apparatus as recited in claim 32, further comprising:

an energy absorbing layer adjacent the glass substrate opposite from the silicon platform;

wherein the energy absorbing layer and the glass substrate are configured to propagate a stress wave across the glass substrate to generate the tensile stress between the silicon platform and the glass substrate.

34. An apparatus as recited in claim 32, wherein the laser beam passes through the glass substrate to generate the tensile stress between the silicon platform and the glass substrate.



Boeing Ex. 1002, p. 159 of 177
Boeing v. Regents Univ. Cal.

35. An apparatus as recited in claim 32, wherein the silicon platform comprises one or more circuits.

36. An apparatus as recited in claim 32, wherein the receiving substrate comprises a polymer.

37. An apparatus as recited in claim 36, wherein the receiving substrate is spun coated with a polymer film.



Boeing Ex. 1002, p. 160 of 177
Boeing v. Regents Univ. Cal.

## ABSTRACT OF THE DISCLOSURE

A device for generating a tensile force between a substrate and a coating, wherein the substrate has a thickness defined by a first side and a second side in a first axis, and the coating is applied to the first side of the substrate such that the coating and substrate are axially spaced along the first axis in intimate facing contact with each other to form a coating/substrate interface. The apparatus has a glass element disposed on the second side of the substrate and axially spaced along the first axis. The glass element is configured to propagate a stress wave to the coating/substrate interface to generate a tensile force between the substrate and the coating.



Boeing Ex. 1002, p. 161 of 177
Boeing v. Regents Univ. Cal.

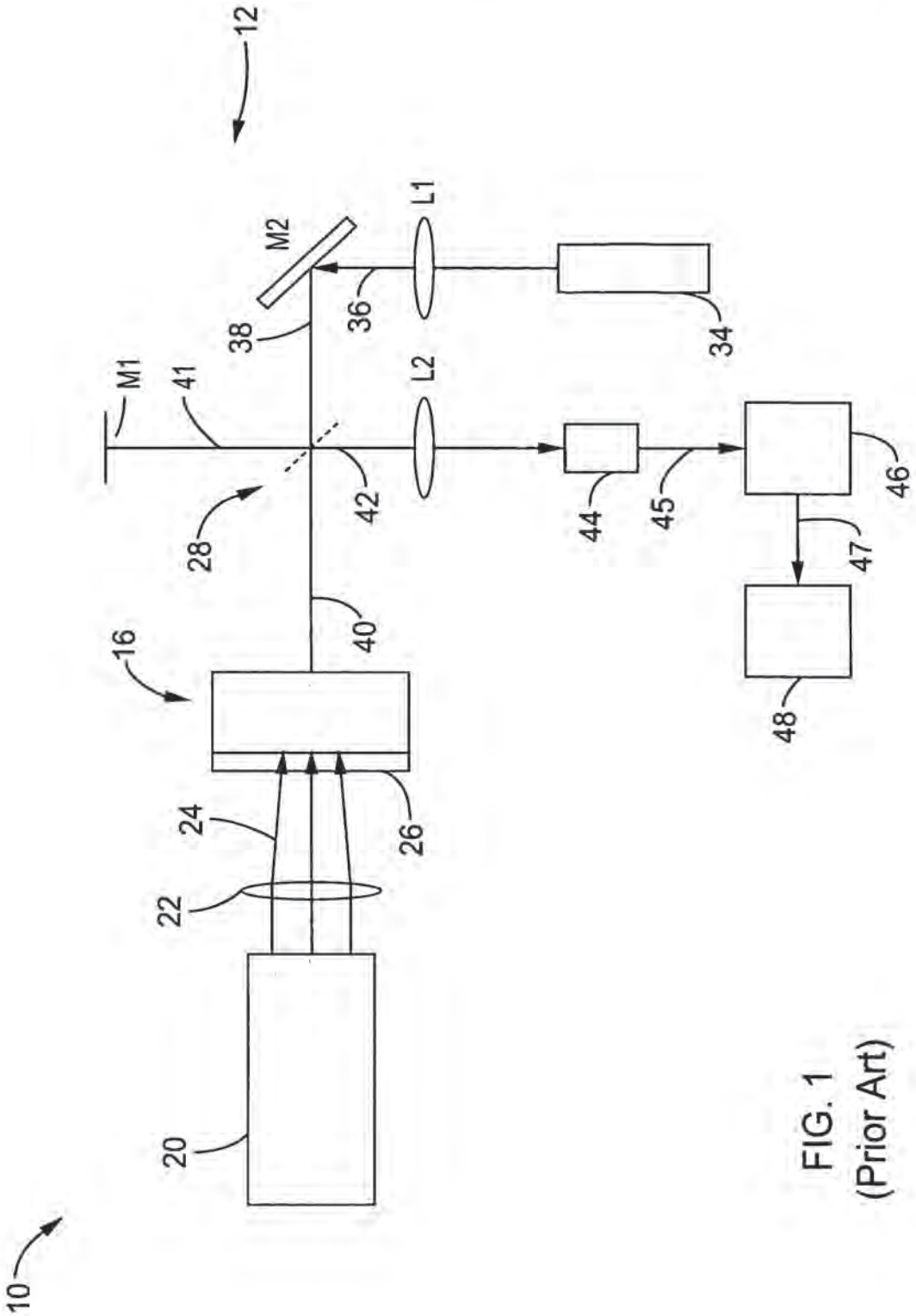


FIG. 1
(Prior Art)

BEST AVAILABLE COPY

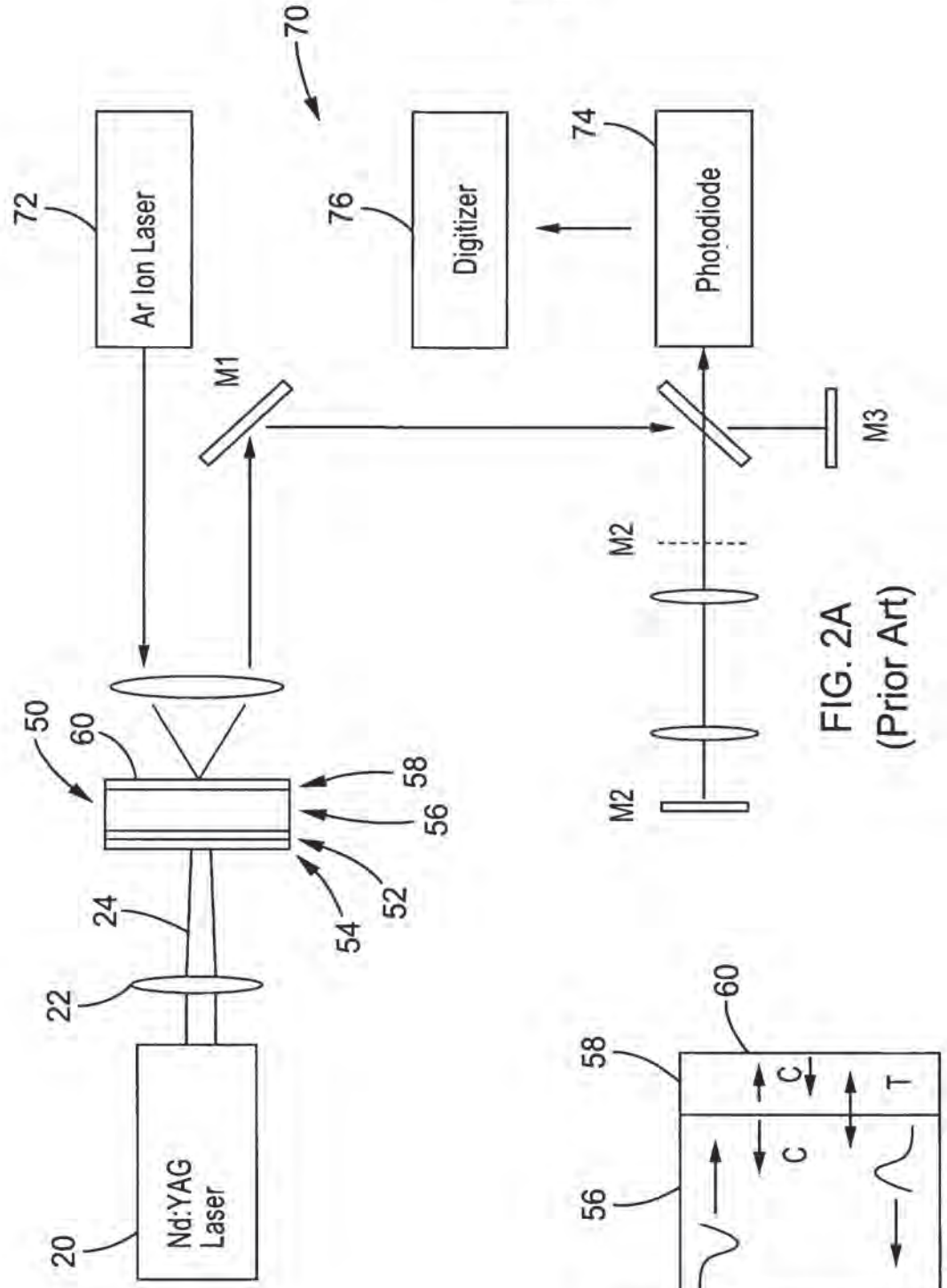


FIG. 2A
(Prior Art)

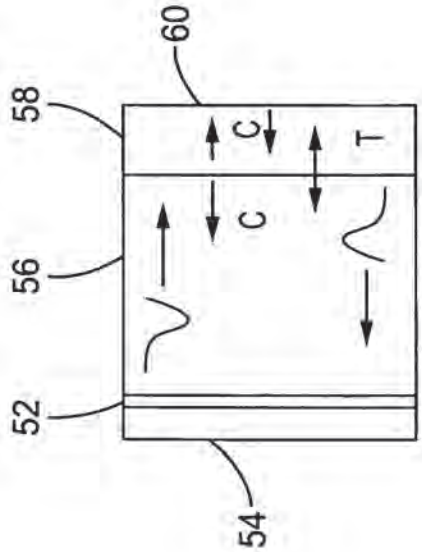


FIG. 2B
(Prior Art)

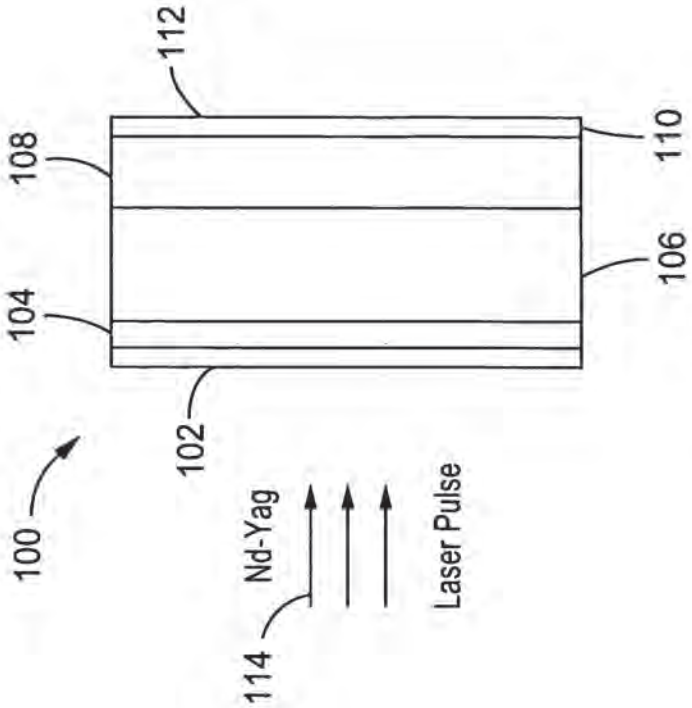


FIG. 4

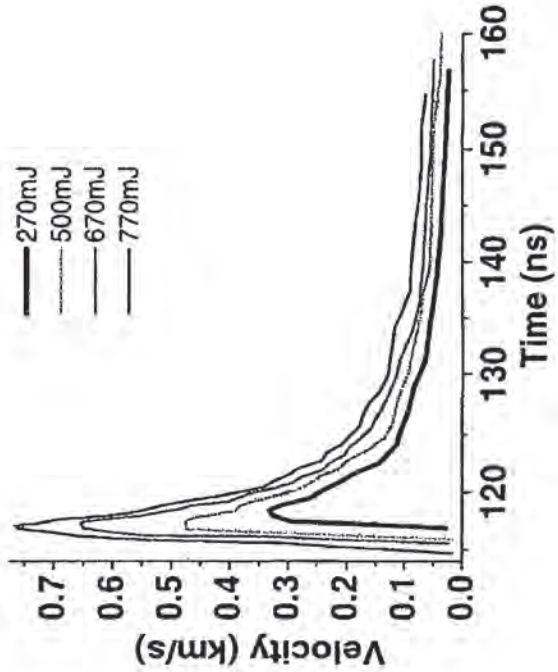


FIG. 3
(Prior Art)

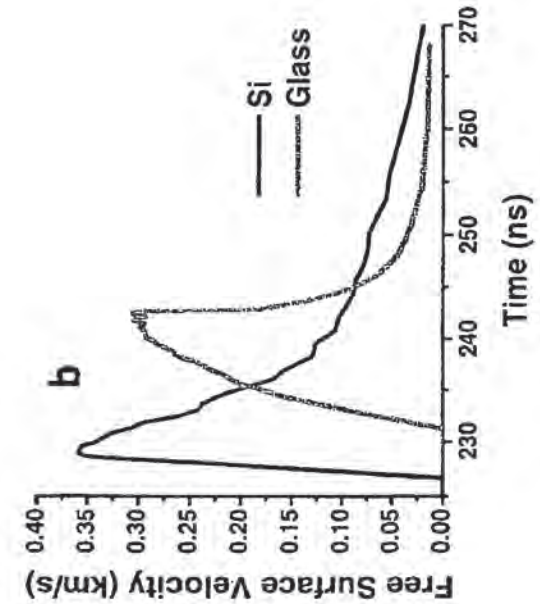
b
Free Surface Velocity (km/s)
0.40
0.35
0.30
0.25
0.20
0.15
0.10
0.05
0.00
230
240
250
260
270
Time (ns)
Si
Glass

FIG. 5B

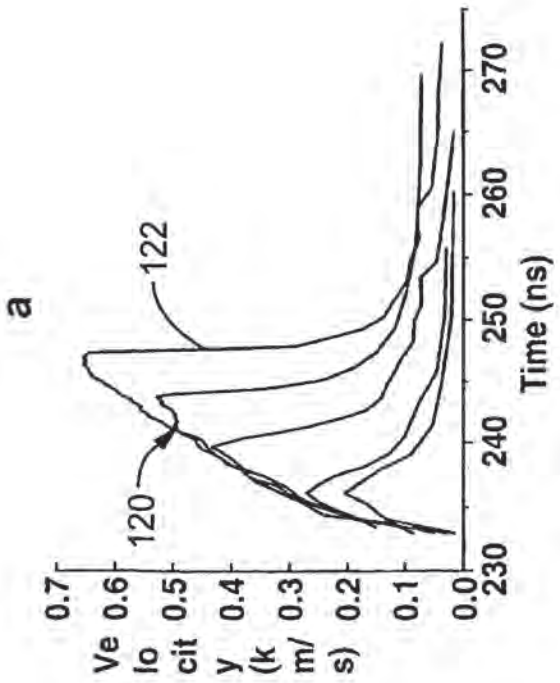
a
Velocity (km/s)
0.7
0.6
0.5
0.4
0.3
0.2
0.1
0.0
230
240
250
260
270
Time (ns)
120
122

FIG. 5A

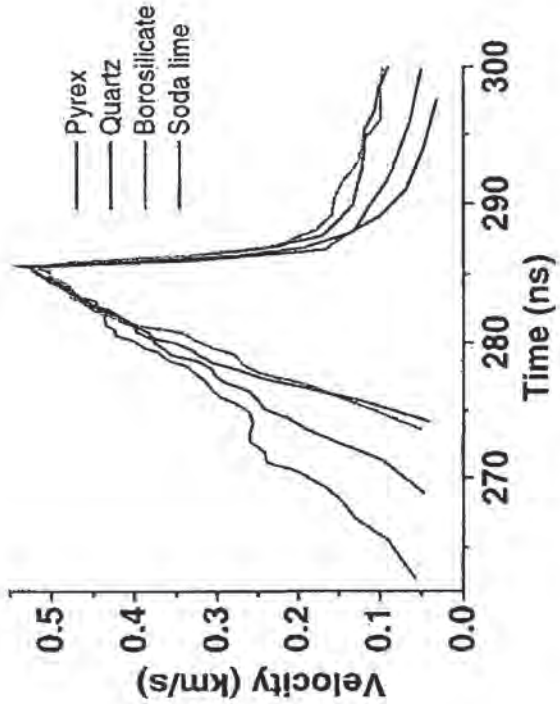
Pyrex
Quartz
Borosilicate
Soda lime
Velocity (km/s)
0.0
0.1
0.2
0.3
0.4
0.5
270
280
290
300
Time (ns)

FIG. 6

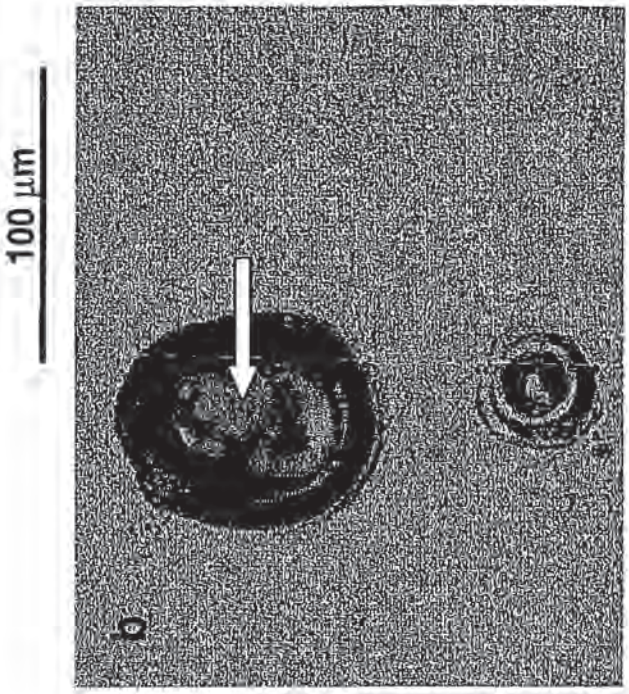


FIG. 7B

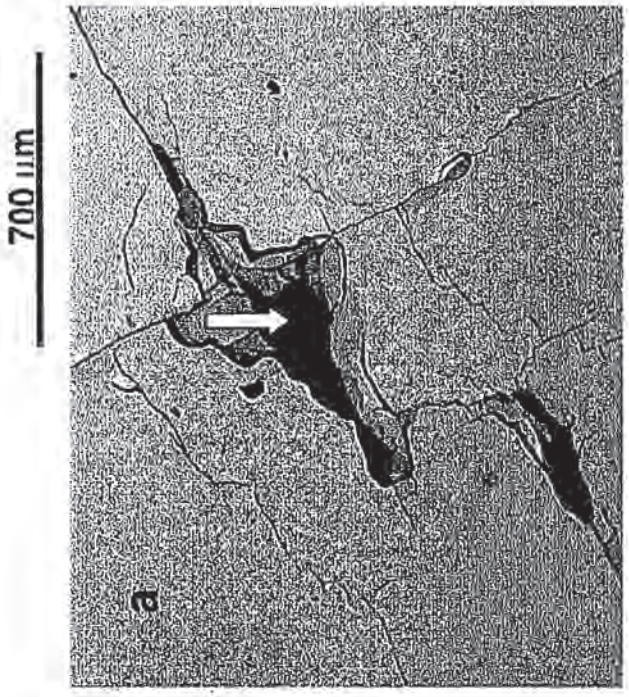


FIG. 7A

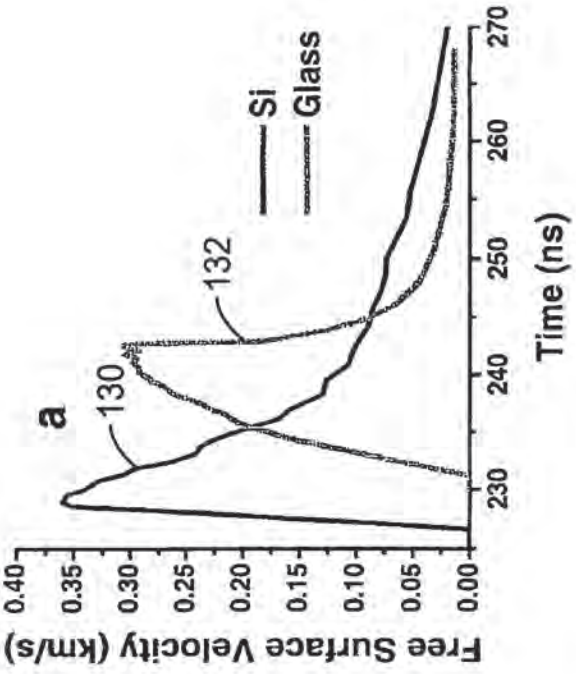
a
130
132
Si
Glass
Free Surface Velocity (km/s)
0.40
0.35
0.30
0.25
0.20
0.15
0.10
0.05
0.00
230
240
250
260
270
Time (ns)

FIG. 8A

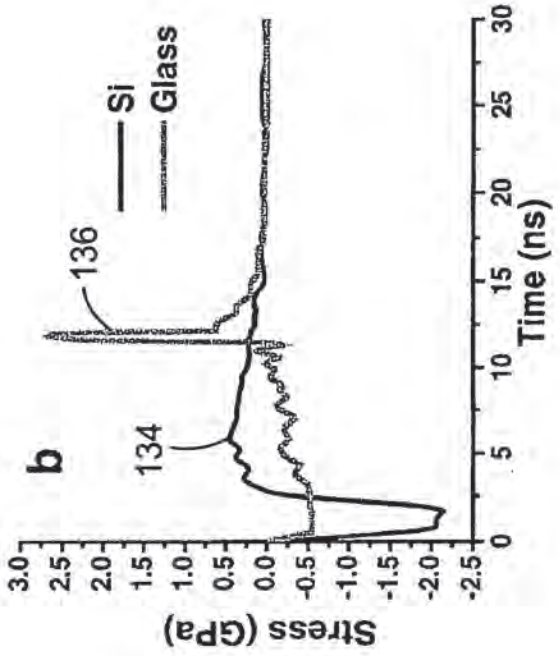
b
134
136
Si
Glass
Stress (GPa)
3.0
2.5
2.0
1.5
1.0
0.5
0.0
-0.5
-1.0
-1.5
-2.0
-2.5
0
5
10
15
20
25
30
Time (ns)

FIG. 8B

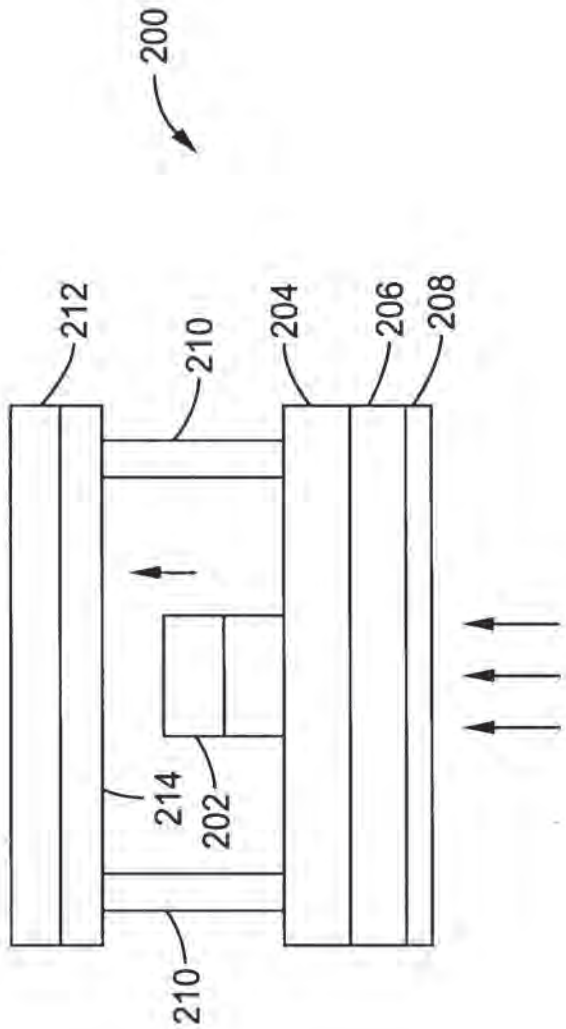
200
212
210
204
206
208
214
202
210

FIG. 9A

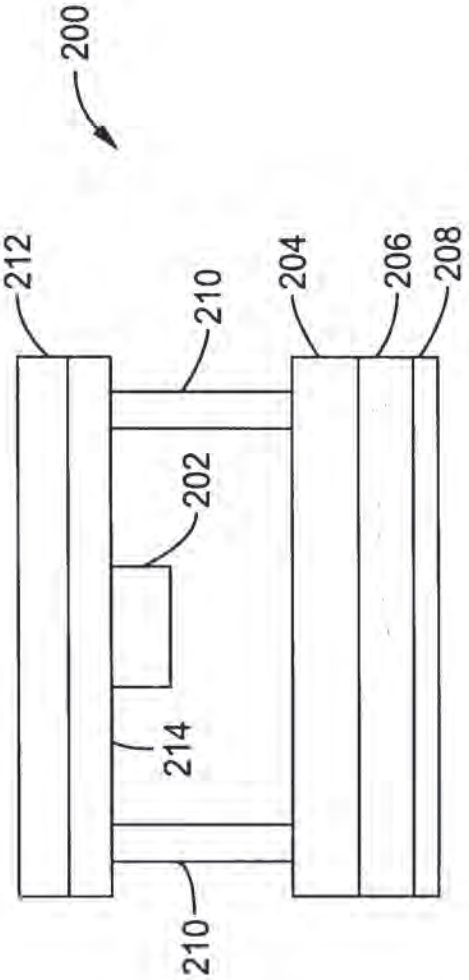
200
212
210
204
206
208
202
214
210

FIG. 9B

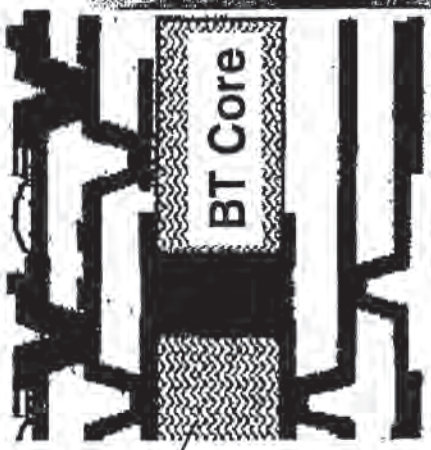


FIG. 10A

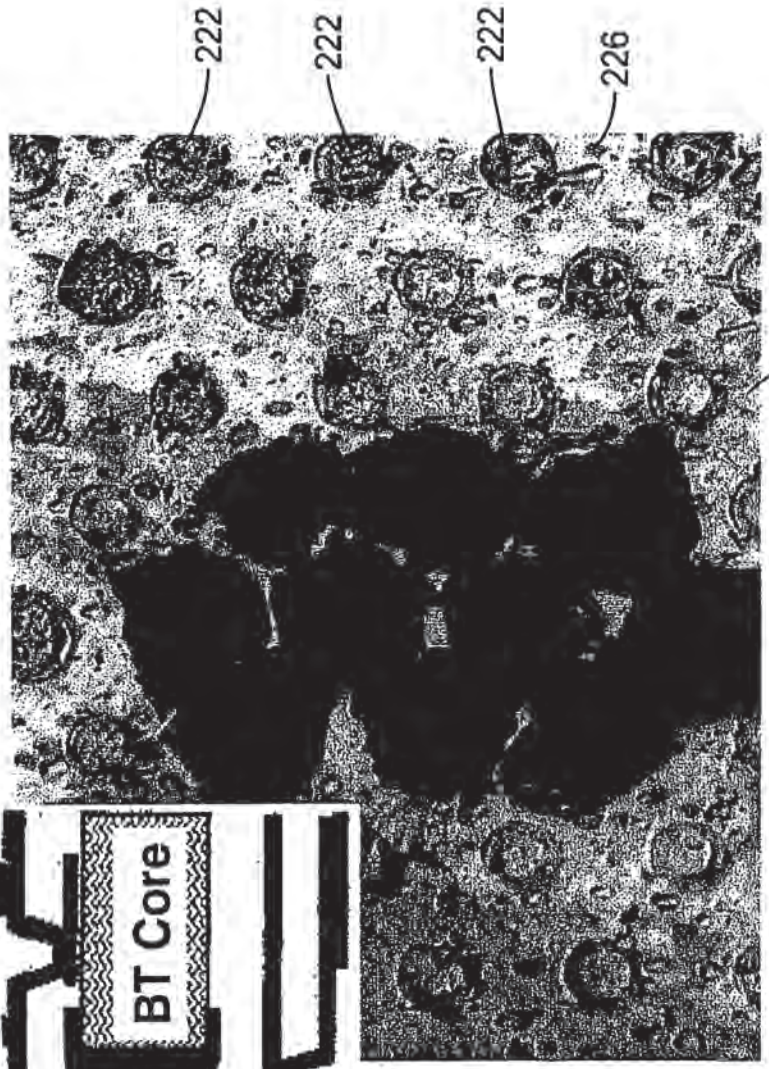


FIG. 10B

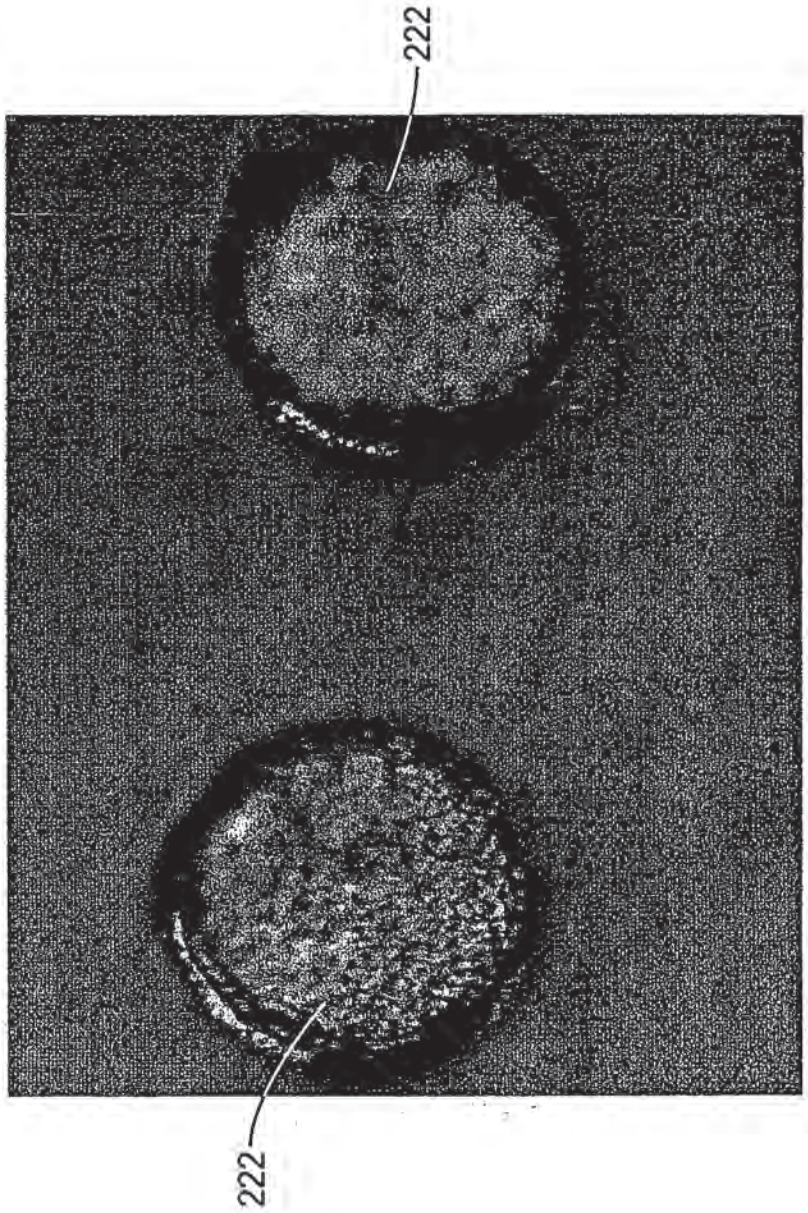


FIG. 11

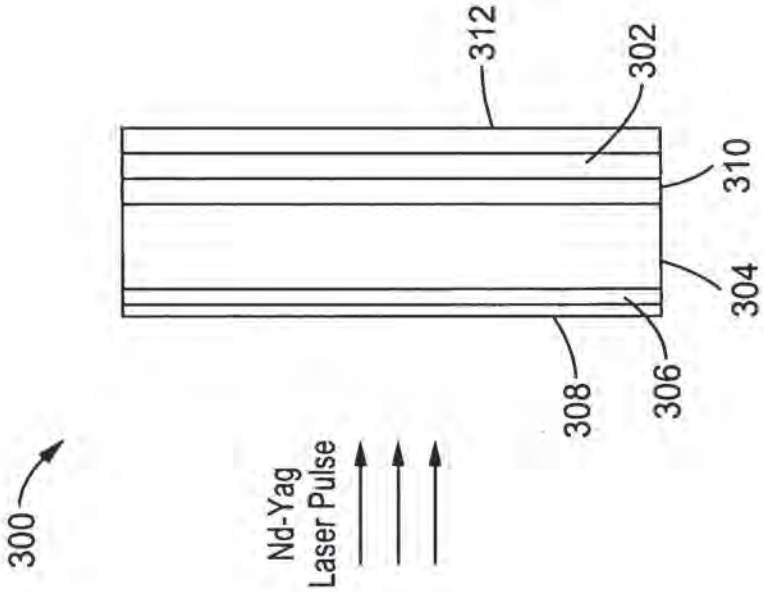


FIG. 12

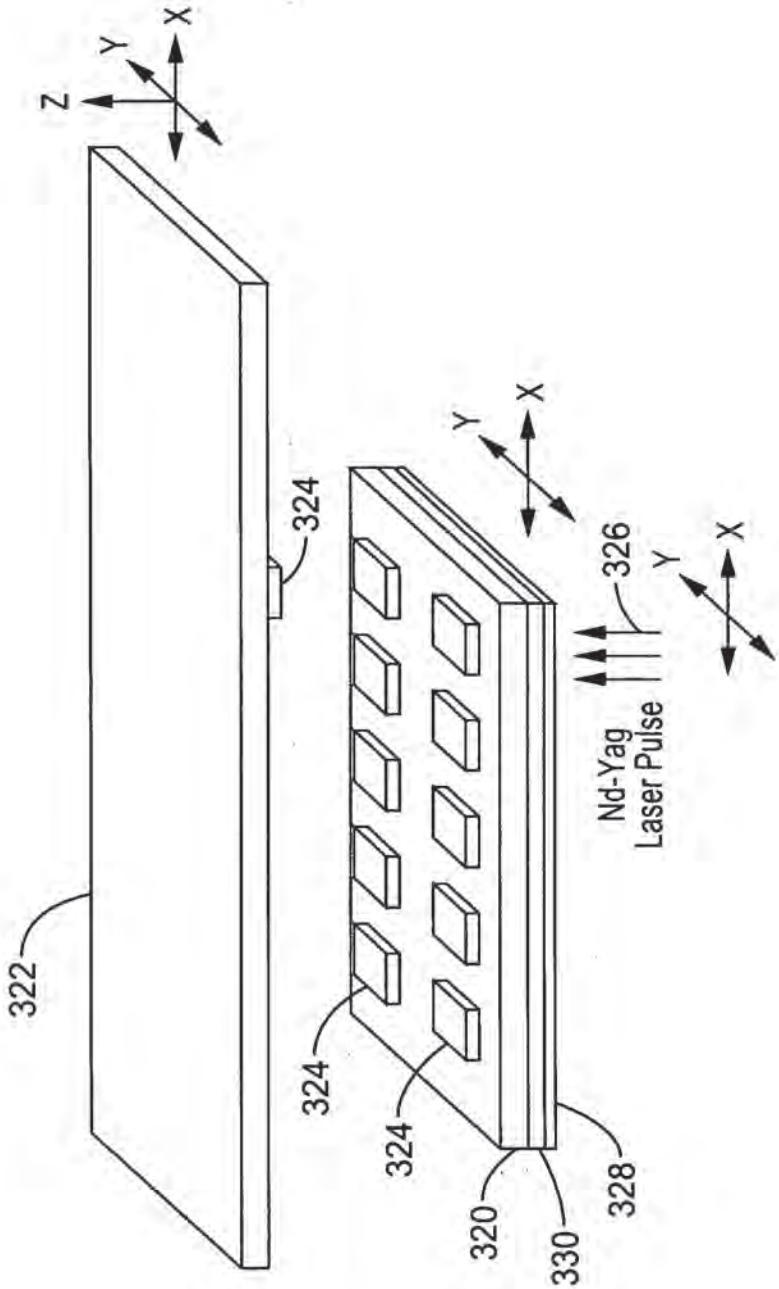


FIG. 13

**This Page is Inserted by IFW Indexing and Scanning Operations and is not part of the Official Record**

## BEST AVAILABLE IMAGES

Defective images within this document are accurate representations of the original documents submitted by the applicant.

Defects in the images include but are not limited to the items checked:

- ☐ BLACK BORDERS
- ☐ IMAGE CUT OFF AT TOP, BOTTOM OR SIDES
- ☑ FADED TEXT OR DRAWING
- ☐ BLURRED OR ILLEGIBLE TEXT OR DRAWING
- ☐ SKEWED/SLANTED IMAGES
- ☐ COLOR OR BLACK AND WHITE PHOTOGRAPHS
- ☐ GRAY SCALE DOCUMENTS
- ☐ LINES OR MARKS ON ORIGINAL DOCUMENT
- ☐ REFERENCE(S) OR EXHIBIT(S) SUBMITTED ARE POOR QUALITY
- ☐ OTHER: _____

**IMAGES ARE BEST AVAILABLE COPY.**
**As rescanning these documents will not correct the image problems checked, please do not report these problems to the IFW Image Problem Mailbox.**

PTO/SB/08A (08-03)
Approved for use through 07/31/2006. OMB 0651-0031
U.S. Patent and Trademark Office; U.S. DEPARTMENT OF COMMERCE
Under the Paperwork Reduction Act of 1995, no persons are required to respond to a collection of information unless it contains a valid OMB control number.

Substitute for form 1449/PTO

# INFORMATION DISCLOSURE STATEMENT BY APPLICANT

*(Use as many sheets as necessary)*

Sheet 1 of 1

| Complete if Known | |
|---|---|
| Application Number | |
| Filing Date | |
| First Named Inventor | VIJAY GUPTA |
| Art Unit | |
| Examiner Name | |
| Attorney Docket Number | UC03-126-2US |

**U. S. PATENT DOCUMENTS**

| Examiner Initials* | Cite No.[1] | Document Number Number-Kind Code[2] (if known) | Publication Date MM-DD-YYYY | Name of Patentee or Applicant of Cited Document | Pages, Columns, Lines, Where Relevant Passages or Relevant Figures Appear |
|---|---|---|---|---|---|
| | | US- 5,438,402 A | 08-07-1995 | Gupta | |
| | | US- | | | |
| | | US- | | | |
| | | US- | | | |
| | | US- | | | |
| | | US- | | | |
| | | US- | | | |
| | | US- | | | |
| | | US- | | | |
| | | US- | | | |
| | | US- | | | |
| | | US- | | | |
| | | US- | | | |
| | | US- | | | |
| | | US- | | | |
| | | US- | | | |
| | | US- | | | |
| | | US- | | | |

**FOREIGN PATENT DOCUMENTS**

| Examiner Initials* | Cite No.[1] | Foreign Patent Document Country Code[3]-Number[4]-Kind Code[5] (if known) | Publication Date MM-DD-YYYY | Name of Patentee or Applicant of Cited Document | Pages, Columns, Lines, Where Relevant Passages Or Relevant Figures Appear | T[6] |
|---|---|---|---|---|---|---|
| | | | | | | |
| | | | | | | |
| | | | | | | |
| | | | | | | |
| | | | | | | |
| | | | | | | |

| Examiner Signature | | Date Considered | |
|---|---|---|---|

*EXAMINER: Initial if reference considered, whether or not citation is in conformance with MPEP 609. Draw line through citation if not in conformance and not considered. Include copy of this form with next communication to applicant. [1] Applicant's unique citation designation number (optional). [2] See Kinds Codes of USPTO Patent Documents at www.uspto.gov or MPEP 901.04. [3] Enter Office that issued the document, by the two-letter code (WIPO Standard ST.3). [4] For Japanese patent documents, the indication of the year of the reign of the Emperor must precede the serial number of the patent document. [5] Kind of document by the appropriate symbols as indicated on the document under WIPO Standard ST.16 if possible. [6] Applicant is to place a check mark here if English language Translation is attached.

This collection of information is required by 37 CFR 1.97 and 1.98. The information is required to obtain or retain a benefit by the public which is to file (and by the USPTO to process) an application. Confidentiality is governed by 35 U.S.C. 122 and 37 CFR 1.14. This collection is estimated to take 2 hours to complete, including gathering, preparing, and submitting the completed application form to the USPTO. Time will vary depending upon the individual case. Any comments on the amount of time you require to complete this form and/or suggestions for reducing this burden, should be sent to the Chief Information Officer, U.S. Patent and Trademark Office, P.O. Box 1450, Alexandria, VA 22313-1450. DO NOT SEND FEES OR COMPLETED FORMS TO THIS ADDRESS. **SEND TO: Commissioner for Patents, P.O. Box 1450, Alexandria, VA 22313-1450.**

*If you need assistance in completing the form, call 1-800-PTO-9199 (1-800-786-9199) and select option 2.*

## CERTIFICATION UNDER 37 CFR 1.10

I hereby certify that the foregoing:

Information Disclosure Statement by Applicant

is being deposited with the United States Postal Service on 8/15/06 in an envelope as "Express Mail Post Office to Addressee" Mailing Label Number EV857125075US addressed to the: Commissioner for Patents, P.O. Box 1450, Alexandria, VA 22313-1450.

JOHN P. O'BANION

**(Type or print name of person mailing paper)**

(Signature of person mailing paper)

PTO/SB/06 (12-04)
Approved for use through 7/31/2006. OMB 0651-0032
U.S. Patent and Trademark Office; U.S. DEPARTMENT OF COMMERCE
Under the Paperwork Reduction Act of 1995, no persons are required to respond to a collection of information unless it displays a valid OMB control number.

# PATENT APPLICATION FEE DETERMINATION RECORD

Substitute for Form PTO-875

Application or Docket Number: 11,504,981

## APPLICATION AS FILED – PART I

| FOR | (Column 1) NUMBER FILED | (Column 2) NUMBER EXTRA | SMALL ENTITY RATE ($) | SMALL ENTITY FEE ($) | OR | OTHER THAN SMALL ENTITY RATE ($) | OTHER THAN SMALL ENTITY FEE ($) |
|---|---|---|---|---|---|---|---|
| BASIC FEE (37 CFR 1.16(a), (b), or (c)) | | | | 150 | | | |
| SEARCH FEE (37 CFR 1.16(k), (i), or (m)) | | | | 250 | | | |
| EXAMINATION FEE (37 CFR 1.16(o), (p), or (q)) | | | | 100 | | | |
| TOTAL CLAIMS (37 CFR 1.16(i)) | 37 minus 20 = | 17 | X$ 25 | 425 | OR | X$50 | |
| INDEPENDENT CLAIMS (37 CFR 1.16(h)) | 4 minus 3 = | * 1 | X$100 | 100 | | X$200 | |
| APPLICATION SIZE FEE (37 CFR 1.16(s)) | If the specification and drawings exceed 100 sheets of paper, the application size fee due is $250 ($125 for small entity) for each additional 50 sheets or fraction thereof. See 35 U.S.C. 41(a)(1)(G) and 37 CFR | | | | | | |
| MULTIPLE DEPENDENT CLAIM PRESENT (37 CFR 1.16(j)) | | | 180 | | | 360 | |
| * If the difference in column 1 is less than zero, enter "0" in column 2. | | | TOTAL | 1025 | | TOTAL | |

## APPLICATION AS AMENDED – PART II

| | | (Column 1) CLAIMS REMAINING AFTER AMENDMENT | | (Column 2) HIGHEST NUMBER PREVIOUSLY PAID FOR | (Column 3) PRESENT EXTRA | SMALL ENTITY RATE ($) | SMALL ENTITY ADDI-TIONAL FEE ($) | OR | OTHER THAN SMALL ENTITY RATE ($) | OTHER THAN SMALL ENTITY ADDI-TIONAL FEE ($) |
|---|---|---|---|---|---|---|---|---|---|---|
| AMENDMENT A | Total (37 CFR 1.16(i)) | * | Minus | ** | = | X = | | OR | X = | |
| | Independent (37 CFR 1.16(h)) | * | Minus | *** | = | X = | | OR | X = | |
| | Application Size Fee (37 CFR 1.16(s)) | | | | | | | | | |
| | FIRST PRESENTATION OF MULTIPLE DEPENDENT CLAIM (37 CFR 1.16(j)) | | | | | 180 | | OR | 360 | |
| | | | | | | TOTAL ADD'T FEE | | OR | TOTAL ADD'T FEE | |

| | | (Column 1) CLAIMS REMAINING AFTER AMENDMENT | | (Column 2) HIGHEST NUMBER PREVIOUSLY PAID FOR | (Column 3) PRESENT EXTRA | RATE ($) | ADDI-TIONAL FEE ($) | OR | RATE ($) | ADDI-TIONAL FEE ($) |
|---|---|---|---|---|---|---|---|---|---|---|
| AMENDMENT B | Total (37 CFR 1.16(i)) | * | Minus | ** | = | X = | | OR | X = | |
| | Independent (37 CFR 1.16(h)) | * | Minus | *** | = | X = | | OR | X = | |
| | Application Size Fee (37 CFR 1.16(s)) | | | | | | | | | |
| | FIRST PRESENTATION OF MULTIPLE DEPENDENT CLAIM (37 CFR 1.16(j)) | | | | | N/A | | OR | N/A | |
| | | | | | | TOTAL ADD'T FEE | | OR | TOTAL ADD'T FEE | |

* If the entry in column 1 is less than the entry in column 2, write "0" in column 3.
** If the "Highest Number Previously Paid For" IN THIS SPACE is less than 20, enter "20".
*** If the "Highest Number Previously Paid For" IN THIS SPACE is less than 3, enter "3".
The "Highest Number Previously Paid For" (Total or Independent) is the highest number found in the appropriate box in column 1.

This collection of information is required by 37 CFR 1.16. The information is required to obtain or retain a benefit by the public which is to file (and by the USPTO to process) an application. Confidentiality is governed by 35 U.S.C. 122 and 37 CFR 1.14. This collection is estimated to take 12 minutes to complete, including gathering, preparing, and submitting the completed application form to the USPTO. Time will vary depending upon the individual case. Any comments on the amount of time you require to complete this form and/or suggestions for reducing this burden, should be sent to the Chief Information Officer, U.S. Paten and Trademark Office, U.S. Department of Commerce, P.O. Box 1450, Alexandria, VA 22313-1450. DO NOT SEND FEES OR COMPLETED FORMS TO THIS ADDRESS. **SEND TO: Commissioner for Patents, P.O. Box 1450, Alexandria, VA 22313-1450.**

*If you need assistance in completing the form, call 1-800-PTO-9199 and select option 2.*