US011083621B2

(12) **United States Patent**
Rynerson

(10) **Patent No.: US 11,083,621 B2**
(45) **Date of Patent: *Aug. 10, 2021**

(54) **INSTRUMENT FOR TREATING AN OCULAR DISORDER**

(71) Applicant: **BlephEx, LLC**, Franklin, TN (US)

(72) Inventor: **James M. Rynerson**, Franklin, TN (US)

(73) Assignee: **BLEPHEX, LLC**, Franklin, TN (US)

(*) Notice: Subject to any disclaimer, the term of this patent is extended or adjusted under 35 U.S.C. 154(b) by 0 days.

This patent is subject to a terminal disclaimer.

(21) Appl. No.: **16/590,228**

(22) Filed: **Oct. 1, 2019**

(65) **Prior Publication Data**

US 2020/0030146 A1 Jan. 30, 2020

Related U.S. Application Data

(63) Continuation of application No. 16/352,758, filed on Mar. 13, 2019, now Pat. No. 10,449,087, which is a continuation of application No. 13/949,365, filed on Jul. 24, 2013, which is a continuation-in-part of application No. 13/556,729, filed on Jul. 24, 2012, now Pat. No. 9,039,718.

(51) **Int. Cl.**
A61F 9/007 (2006.01)
A61F 13/38 (2006.01)

(52) **U.S. Cl.**
CPC ***A61F 9/00709*** (2013.01); ***A61F 13/38*** (2013.01)

(58) **Field of Classification Search**
CPC A61F 9/00; A61F 9/0008; A61F 9/00709; A61F 9/00736; A61F 9/00745; A61F 9/00772; A61F 13/38; A61H 2205/024
USPC 604/1, 294; 606/162
See application file for complete search history.

(56) **References Cited**

U.S. PATENT DOCUMENTS

111,265	A	1/1871	Shoemaker et al.
1,100,504	A	6/1914	Taft
1,554,317	A	9/1925	Worthing et al.
1,707,353	A	4/1929	James et al.

(Continued)

FOREIGN PATENT DOCUMENTS

CA	2257040	A1	6/2000
CN	86204490	U	4/1987

(Continued)

OTHER PUBLICATIONS

"Connector standard sheets." Wikipedia. < http://en.wikipedia.org/wiki/IEC_60320. Accessed Sep. 13, 2018.

(Continued)

Primary Examiner — Martin T Ton
(74) *Attorney, Agent, or Firm* — Wilson Sonsini Goodrich & Rosati

(57) **ABSTRACT**

An instrument for removing debris from an eye during the treatment of an ocular disorder has a swab and a rigid member. The swab includes a tip portion sized to provide access to the debris on an eyelid of the eye. The rigid member has a distal end portion affixed to the swab and a proximal end portion with a cross-sectional member profile. The cross-sectional member profile is non-circular and has a first groove. The first groove extends longitudinally along the proximal end portion for cooperating with a chuck such that rotation of the proximal end portion within the chuck is inhibited.

18 Claims, 4 Drawing Sheets

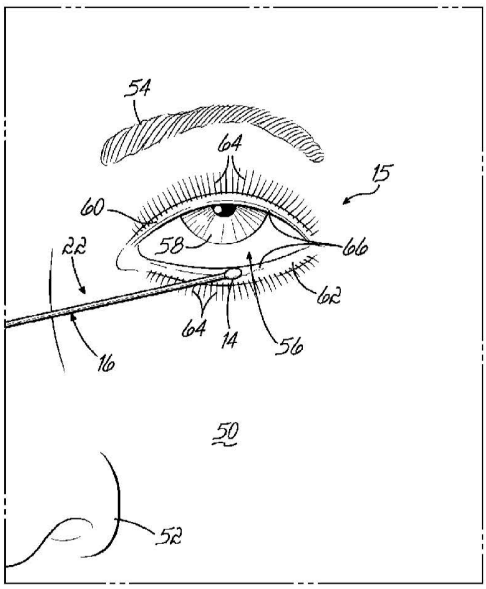

(56) **References Cited**

U.S. PATENT DOCUMENTS

1,832,554	A	11/1931	Holstein et al.
2,006,539	A	7/1935	DeFord
2,546,061	A	3/1951	De et al.
2,766,471	A	10/1956	McKenzie et al.
2,766,650	A	10/1956	Capra et al.
3,029,672	A	4/1962	Lowenborg
3,507,508	A	4/1970	Andrews et al.
3,517,754	A	6/1970	Robert
D262,739	S	1/1982	Norman
D286,438	S	10/1986	Philip
4,778,457	A	10/1988	York
4,838,851	A	6/1989	Shabo
4,883,454	A	11/1989	Hamburg
D306,347	S	2/1990	Robert
4,913,682	A	4/1990	Shabo
4,955,896	A	9/1990	Freeman
5,176,694	A	1/1993	Price
5,456,265	A	10/1995	Yim
5,458,427	A	10/1995	Simond
5,498,077	A	3/1996	Krzywdzjak et al.
5,588,497	A	12/1996	Thorburn
5,632,756	A	5/1997	Kruglick
5,690,618	A	11/1997	Smith et al.
D401,332	S	11/1998	George
5,904,390	A	5/1999	Emery et al.
5,974,615	A	11/1999	Schwarz-Hartmann et al.
6,036,198	A	3/2000	Kramer
6,116,900	A	9/2000	Ostler
6,536,066	B2	3/2003	Dickie
7,384,405	B2	6/2008	Rhoades
D588,697	S	3/2009	Hickok
D589,620	S	3/2009	Hickok
D645,140	S	9/2011	Peuker et al.
D701,304	S	3/2014	Lair et al.
D701,308	S	3/2014	Brannon
D705,426	S	5/2014	Fiorina et al.
9,039,718	B2	5/2015	Rynerson
9,675,516	B2	6/2017	Parsloe
2004/0067098	A1	4/2004	Sun
2004/0172035	A1	9/2004	Parmigiani
2005/0132513	A1	6/2005	Eliav et al.
2006/0116355	A1	6/2006	Van
2007/0016255	A1	1/2007	Korb et al.
2007/0049860	A1	3/2007	Seminara
2007/0060988	A1*	3/2007	Grenon A61F 9/00 607/96
2007/0231353	A1	10/2007	Gilbard et al.
2008/0188877	A1	8/2008	Hickingbotham
2008/0221533	A1	9/2008	Matityahu
2008/0260563	A1	10/2008	Refenius et al.
2009/0112242	A1	4/2009	Kao
2009/0124985	A1*	5/2009	Hasenoehrl A45D 34/04 604/289
2010/0256552	A1	10/2010	Korb et al.
2011/0137214	A1	6/2011	Korb et al.
2011/0144562	A1	6/2011	Heeren et al.
2011/0160635	A1	6/2011	Baschnagel
2012/0065556	A1	3/2012	Smith et al.
2013/0058710	A1	3/2013	Fan
2013/0081518	A1	4/2013	Scheid et al.
2013/0331768	A1*	12/2013	Nichamin A61P 29/00 604/22
2014/0031845	A1	1/2014	Rynerson
2014/0052164	A1	2/2014	Rynerson
2014/0214062	A1	7/2014	Rynerson et al.
2014/0221908	A1	8/2014	Sonsino et al.
2014/0249509	A1*	9/2014	Rubinfeld A61F 9/0008 604/521
2019/0209373	A1	7/2019	Rynerson

FOREIGN PATENT DOCUMENTS

CN	2538310	Y	3/2003
CN	201168118	Y	12/2008
CN	201362154	Y	12/2009
CN	201505215	U	6/2010
CN	201692153	U	1/2011
JP	H06261839	A	9/1994
JP	H10108801	A	4/1998
WO	WO-9633676	A1	10/1996
WO	WO-2009066077	A1	5/2009
WO	WO-2010149959	A1	12/2010
WO	WO-2012092320	A2	7/2012
WO	WO-2012092320	A3	9/2012
WO	WO-2014018651	A1	1/2014

OTHER PUBLICATIONS

Advertising material for the AlgerBrush II. Bates No. PPM000709-PPM000710. 2 pages.

Alger Equipment Company, Algerbrush II, Introduction, Product Info, About Us, FAQ's, [https://web.archive.org/web/20101121065649/http://www.algercompany.co] (2009)]; [https://web.archive/org/web/20100103204839/http://www.algercompany.co](2009); [https://web.archive.org/web/20100817072535/http://www/algercompany.co] (2009); [https://web.archiveorg/web20101030135414/http://www.algercompany.co] (2009); [https://web.archive.org/web/20101029151415/http://www.algercompany.co] (2009); and [https://web/archive.org/web/20101030135409/http://].

Algerbrush II Quick Reference Catalog, [cited Oct. 2012]. Available from [www.rheinmedical.com/wpcontent/uploads/2012/10/AlgerbrushCatalog1333AHBC.pdf].

Australian Patent Application No. 2013295781 Office Action dated Sep. 20, 2017.

Blephex LLC v. Pain Point Medical Systems, Inc., d/b/ MiBo Medical Group Inc., Case No. 3:16-cv-00410N, USDC, Northern District of Texas, Dallas Division, Defendant's Amended Invalidity Contentions, filed Oct. 11, 2018. 59 pages.

Blephex LLC v. Pain Point Medical Systems, Inc., d/b/a MiBo Medical Group Inc, Case No. 3:16-cv-00410N, USDC, Northern District of Texas, Dallas Division, Defendant's Invalidity Contentions, filed Jun. 24, 2016, 15 pages.

Blephex LLC v. Pain Point Medical Systems, Inc., d/b/a MiBo Medical Group Inc., Case No. 3:16-cv-00410N, USDC, Northern District of Texas, Dallas Division, Claim Construction Order, Issued Apr. 23, 2019. 12 pages.

Brown et al.: Corneal Rust Removal by Electric Drill. British J. Ophthal. 59: 586-589 (1975). Bates No. PPM002809-PPM002813. 5 pages.

Canadian Patent Application No. 2,873,219 Office Action dated Mar. 21, 2016.

Chinese Patent Application No. 201380049077.1 Office Action dated Dec. 28, 2015 (English Translation Available).

Eurasian Patent Application No. 201590259 Office Action dated Jul. 11, 2017 (English Translation Only).

Eurasian Patent Application No. 201590259 Office Action dated Oct. 4, 2016 (English Translation Available).

European search report with written opinion dated Mar. 26, 2019 for EP Application No. 18185867.

Forthemoney et al., Blepharitis, 6 pages. [cited 2012 Mar. 2012]. Available from [http://en.wikipedia.org/w/index.php?oldid=474399644].

Geerling G., et al., The International Workshop on Meibomian Gland Dysfunction: Report of the Subcommittee on Management and Treatment of Meibomian Gland Dysfunction. The Association for Research in Vision and Ophthalmology, Inc., IOVS Special Issue 2011, 52.4 (2011): 2050-2064.

Greiner, et al. Effects of eyelid scrubbing on the lid margin. CLAO J. Apr. 1999;25(2):109-13.

Japanese Patent Application No. 2015-524423 Office Action dated May 15, 2017 (English Translation Only).

Key., A Comparative Study of Eyelid Cleaning Regimens in Chronic Blepharitis. Contact Lens Association of Opthalmologists Journal, 22.3 (Jul. 1996): 209-212.

Knop et al., The International Workshop on Meibomian Gland Dysfunction: Report of the Subcommittee on Anatomy, Physiology,

(56) **References Cited**

OTHER PUBLICATIONS

and Pathophysiology of the Meibomian Gland. The Association for Research in Vision and Ophthalmology, Inc., IOVS Special Issue 2011, 52.4 (2011): 1938-1978.

Myco Ind., Inc., v. Blephex, LLC, Case No. 2:19-cv-10645, USDC, Eastern District of Michigan, Southern Division, Opinion and Order Granting Plaintiffs Amended Motion for Preliminary Injunction, issued Aug. 27, 2019. 24 pages.

OCuSOFT [cited Jan. 8, 2015]. Available from: [http://www.ocusoft.com/Foreign-body-Removai-AKGERBRUSH-II-CHUCK-P4666.aspx] Screen capture of page submitted herewith as Algerbrush II Chuck with bilobal fitting.

PCT/US2013/051850 International Search Report and Written Opinion dated Oct. 14, 2013.

Rhein Medical, Inc., [cited Jan. 8, 2015]. Retrieved form the internet at [http://www.rheinmedical.com/ products-page/algerbrushes/08-13154-algerbrush-ii-chuch-2-5mm-round-fine-gruit-diamond-ball//] Screen capture of page submitted herewith as Algerbrush II chuck and round burr.

Stevens., How to Clean Eyelids. Community Eye Health Journal, 24.75 (Sep. 2011): 15 pages.

The Alger Co., Inc., [cited Dec. 22, 2014]. Available from [http://www.algercompany.com/brush/pdf-file/], click on "Operating/Sterilization Procedures" then click on "Algerbrush II Operating Instruction Rev. 3 2012" to retrieve pdf submitted herewith as "Aigerbrush-11-Operating_instruct. 2012".

The Alger Co., Inc., [cited Dec. 22, 2014]. Available from [http://www.algrecompany.com/brush/2013/01/02/lhe-algerbrush-ii-2/] Screen capture of page submitted herewith as Algerbrush II Product Page.

The Alger Company, Alger Brush Product Information, 2 pages. [cited 2012]. Available from [http://www.algercompany.com/brush.product-info].

The Alger Company, AlgerBrush II Operating Instructions, Apr. 2012, 2 pages.

The Alger Company, AlgerBrush Product Spec Sheet, Jun. 24, 2012, 1 page.

The Alger Company, Inc., AigerBrush II, 1 page. [cited Mar. 30, 2012]. Available from [http://www.algercompany.com/download/ab_web/Algerbrush3_8.pdf].

BlephEx, LLC. v. *Myco Industries, Inc. and John R. Choate.* Civil Action No. 2:19-cv-13089. BlephEx, LLC's Motion for a Preliminary Injunction and Brief in Support. Nov. 7, 2019.

BlephEx, LLC. v. *Myco Industries, Inc. and John R. Choate.* Civil Action No. 2:19-cv-13089. BlephEx, LLC's Reply in Further Support of Motion for a Preliminary Injunction. Dec. 11, 2019.

BlephEx, LLC. v. *Myco Industries, Inc. and John R. Choate.* Civil Action No. 2:19-cv-13089. Declaration of Dr. James M. Rynerson in Support of BlephEx, LLC's Motion for a Preliminary Injunction. Nov. 7, 2019.

BlephEx, LLC. v. *Myco Industries, Inc. and John R. Choate.* Civil Action No. 2:19-cv-13089. Declaration of Matthew D. Robson in Support of BlephEx, LLC's Motion for a Preliminary Injunction. (Including the following Exhibits 1-30, 32-62). Nov. 7, 2019.

Exhibit 1: A true and correct U.S. Pat. No. 10,449,087. Nov. 7, 2019.

Exhibit 2: A true and correct excerpted prosecution history of U.S. Pat. No. 10,449,087. Nov. 7, 2019.

Exhibit 3: A true and correct excerpted U.S. Appl. No. 13/556,729. Nov. 7, 2019.

Exhibit 4: A true and correct U.S. Pat. No. 9,039,718. Nov. 7, 2019.

Exhibit 5: A true and correct Final Written Decision of the Patent Trial and Appeal Board of the United States Patent and Trademark Office regarding U.S. Pat. No. 9,039,718, dated Feb. 28, 2018. Nov. 7, 2019.

Exhibit 6: A true and correct excerpted Myco Industries, Inc.'s ("Myco") Mar. 15, 2019 Motion for Preliminary Injunction from *Myco Industries, Inc.* v. *BlephEx, LLC*, 2:19-cv-10645-GAD-EAS, (E.D. Mich.). Nov. 7, 2019.

Exhibit 7: A true and correct Court's Aug. 27, 2019 Order regarding Myco's Motion for Preliminary Injunction from *Myco Industries, Inc.* v. *BlephEx, LLC*, 2:19-cv-10645-GAD-EAS, (E.D. Mich.). Nov. 7, 2019.

Exhibit 8: A true and correct Myco's Oct. 3, 2019 Opening Claim Construction Brief from *Myco Industries, Inc.* v. *BlephEx, LLC*, 2:19-cv-10645-GAD-EAS, (E.D. Mich.). Nov. 7, 2019.

Exhibit 9: A true and correct BlephEx's Oct. 3, 2019 Opening Claim Construction Brief from *Myco Industries, Inc.* v. *BlephEx, LLC*, 2:19-cv-10645-GAD-EAS, (E.D. Mich.). Nov. 7, 2019.

Exhibit 10: A true and correct excerpted Declaration of Dr. Penny Asbell submitted in support of BlephEx's proposed claim constructions, dated Aug. 29, 2019, from *Myco Industries, Inc.* v. *BlephEx, LLC*, 2:19-cv-10645-GAD-EAS (E.D. Mich.). Nov. 7, 2019.

Exhibit 11: A true and correct excerpted transcript of the Sep. 11, 2019 deposition of Dr. Steve Silberberg from *Myco Industries, Inc.* v. *BlephEx, LLC*, 2:19-cv-10645-GAD-EAS (E.D. Mich.). Nov. 7, 2019.

Exhibit 12: A true and correct Exhibit 14 to the Sep. 11, 2019 deposition of Dr. Steve Silberberg from *Myco Industries, Inc.* v. *BlephEx, LLC*, 2:19-cv-10645-GAD-EAS (E.D. Mich.). Nov. 7, 2019.

Exhibit 13: A true and correct excerpted Dorland's Illustrated Medical Dictionary, 30th Ed. (2003). Nov. 7, 2019.

Exhibit 14: A true and correct web page titled "What Makes up the Eyelid Margin?" dated Jan. 29, 2014 from the website of the American Academy of Ophthalmology. Nov. 7, 2019.

Exhibit 15: A true and correct web page titled "Eyelid margin" from the website of the American Academy of Ophthalmology. Nov. 7, 2019.

Exhibit 16: A true and correct article by Nelson et al. titled "The International Workshop on Meibomian Gland Dysfunction: Report of the Definition and Classification Subcommittee" by (2011) downloaded from iovs.arvojournals.org. Nov. 7, 2019.

Exhibit 17: A true and correct excerpted Chapter 1, Eyelid Anatomy, of a book by A. Biswas titled "Eyelid Tumors" (2014). Nov. 7, 2019.

Exhibit 18: A true and correct excerpted Myco's Answer to Amended Counterclaims from *Myco Industries, Inc.* v. *BlephEx, LLC*, 2:19-cv-10645-GAD-EAS, (E.D. Mich.). Nov. 7, 2019.

Exhibit 19: A true and correct document titled Owner's Manual for the BlephEx product. Nov. 7, 2019.

Exhibit 20: A true and correct document titled Instructions for Use for the AB Max product. Nov. 7, 2019.

Exhibit 21: A true and correct FDA web page relating to the AB Max product. Nov. 7, 2019.

Exhibit 22: A true and correct FDA web page describing the Product Code PYU. Nov. 7, 2019.

Exhibit 23: A true and correct Myco's web page www.ab-max.com/doctors/. Nov. 7, 2019.

Exhibit 24: A true and correct Myco's web page at www.alc-max.com/doctors/how-it-works/. Nov. 7, 2019.

Exhibit 25: A true and correct Myco's web page at www.ab-max.com/doctors/increase-profits/. Nov. 7, 2019.

Exhibit 26: A true and correct BlephEx's web page at www.blephex.com/doctors/index.php. Nov. 7, 2019.

Exhibit 27: A true and correct BlephEx's web page at www.blephex.com/doctors/index.php/how-does-blephex-work.html. Nov. 7, 2019.

Exhibit 28: A true and correct web page titled "BlephEx Treatment Offered in More Than 1,000 Ophthalmic Practices Worldwide" dated Apr. 28, 2015, at https://www.prnewswire.com/news- releases/blephex-treatment-offered-in-more-than-1000-ophthalmic-practices-worldwide-300073037.html. Nov. 7, 2019.

Exhibit 29: A true and correct web page titled "AOP Awards 2017 Product of the Year" at https://www.aop.org.uk/education-and-events/aop-awards/previous- years/2017/product-of-the-year#Scope. Nov. 7, 2019.

Exhibit 30: A true and correct Myco's advertisement document named "Trade In Trade Up." Nov. 7, 2019.

Exhibit 32: A true and correct capture of Myco's Facebook page, captured on Oct. 27, 2019. Nov. 7, 2019.

Exhibit 33 is a true and correct document reflecting a web page post from Philip Wren. Nov. 7, 2019.

(56) **References Cited**

OTHER PUBLICATIONS

Exhibit 34 is a true and correct document reflecting a web page post from Steve Silberberg. Nov. 7, 2019.
Exhibit 35: Redacted. Nov. 7, 2019.
Exhibit 36: Redacted. Nov. 7, 2019.
Exhibit 37: Redacted. Nov. 7, 2019.
Exhibit 38: Redacted. Nov. 7, 2019.
Exhibit 39: Redacted. Nov. 7, 2019.
Exhibit 40: Redacted. Nov. 7, 2019.
Exhibit 41: Redacted. Nov. 7, 2019.
Exhibit 42: Redacted. Nov. 7, 2019.
Exhibit 43: Redacted. Nov. 7, 2019.
Exhibit 44: Redacted. Nov. 7, 2019.
Exhibit 45: Redacted. Nov. 7, 2019.
Exhibit 46: Redacted. Nov. 7, 2019.
Exhibit 47: A true and correct Myco's web page at www.ab-max.com/doctors/. Nov. 7, 2019.
Exhibit 48: A true and correct Court's Opinion and Order Denying Defendants' Motion to Dismiss from *Myco Industries, Inc.* v. *BlephEx, LLC*, 2:19-cv-10645-GAD-EAS, (E.D. Mich.). Nov. 7, 2019.
Exhibit 49: A true and correct opinion titled *Johns Hopkins Univ.* v. *Alcon Labs.*, No. 15-525, 2018 U.S. Dist. Lexis 70403 (D. Del. Mar. 1, 2018). Nov. 7, 2019.
Exhibit 50: A true and correct Mr. John E. Nemazi's Jun. 14, 2019 letter to me. Nov. 7, 2019.
Exhibit 51: A true and correct excerpted Myco's Response Brief Opposing Defendants' Motion to Dismiss from *Myco Industries, Inc.* v. *BlephEx, LLC*, 2:19-cv-10645-GAD-EAS, (E.D. Mich.). Nov. 7, 2019.
Exhibit 52: A true and correct excerpted Myco's Amended Motion for Preliminary Injunction from *Myco Industries, Inc.* v. *BlephEx, LLC*, 2:19-cv-10645-GAD-EAS, (E.D. Mich.). Nov. 7, 2019.
Exhibit 53: A true and correct Exhibit 1 (Declaration of John Choate) to the Myco's Amended Motion for Preliminary Injunction from *Myco Industries, Inc.* v. *BlephEx, LLC*, 2:19-cv-10645-GAD-EAS, (E.D. Mich.). Nov. 7, 2019.
Exhibit 54: A true and correct opinion titled *Brocade Comm. Sys., Inc.* v. *A10 Networks, Inc.*, No. C 10-3428 PSG, 2013 WL 140039 (N.D. Cal. 2013). Nov. 7, 2019.
Exhibit 55: A true and correct opinion titled *Metso Minerals, Inc.* v. *Powerscreen Intern. Distribution Ltd.*, No. 06-cv-1446 (ADS)(ETB), 2011 WL 2149629 (E.D.N.Y. May 26, 2011). Nov. 7, 2019.
Exhibit 56: A true and correct opinion titled Metalcraft of *Mayville, Inc.* v. *Toro Co.*, No. 16-C-544, 2016 WL 4076894, (E.D. Wis. Aug. 1, 2016). Nov. 7, 2019.
Exhibit 57: A true and correct opinion titled *Cornucopia Prods., LLC* v. *Dyson, Inc.*, No. 12-234, 2012 WL 3094955 (D. Ariz. Jul. 27, 2012). Nov. 7, 2019.
Exhibit 58: A true and correct document titled Exhibit D—Individual Debtor's Statement of Compliance with Credit Counseling Requirement from in re John Raymond Choate, Jr. et al. (Bankr. E.D. Mich.). Nov. 7, 2019.
Exhibit 59: A true and correct excerpted transcript of the Feb. 1, 2017 deposition of Mr. John Choate from *Rysurg, LLC* v. *John R. Choate*, No. 2014-CA-000805XXXXMB(AG), Circuit Court of the 15th Judicial Circuit in and for Palm Beach County, Florida. Nov. 7, 2019.
Exhibit 60: A true and correct U.S. Patent Publication No. 2013/0331768. Nov. 7, 2019.
Exhibit 61: A true and correct Settlement Agreement and Release. Nov. 7, 2019.
Exhibit 62: A true and correct Amendment to Settlement Agreement and Release. Nov. 7, 2019.
Blephex LLC v. *Myco Industries, Inc. and John R. Choate*, Case No. 2:19-cv-13089-DML-APP, Exhibit 1, Invalidity Contentions for U.S. Pat. No. 10,449,087, filed Jun. 1, 2020, 21 pages.
Blephex LLC v. *Myco Industries, Inc. and John R. Choate*, Case No. 2:19-cv-13089-DML-APP, Exhibit 2, Invalidity Contentions for U.S. Pat. No. 10,449,087, filed Jun. 1, 2020, 30 pages.
Blephex LLC v. *Myco Industries, Inc. and John R. Choate*, Case No. 2:19-cv-13089-DML-APP, Exhibit 3, Invalidity Contentions for U.S. Pat. No. 10,449,087, filed Jun. 1, 2020, 20 pages.
Blephex LLC v. *Myco Industries, Inc. and John R. Choate*, Case No. 2:19-cv-13089-DML-APP, Exhibit 4, Invalidity Contentions for U.S. Pat. No. 10,449,087, filed Jun. 1, 2020, 21 pages.
Blephex LLC v. *Myco Industries, Inc. and John R. Choate*, Case No. 2:19-cv-13089-DML-APP, Exhibit 5, Invalidity Contentions for U.S. Pat. No. 10,449,087, filed Jun. 1, 2020, 25 pages.
Blephex LLC v. *Myco Industries, Inc. and John R. Choate*, Case No. 2:19-cv-13089-DML-APP, Exhibit 6, Invalidity Contentions for U.S. Pat. No. 10,449,087, filed Jun. 1, 2020, 21 pages.
BlephEx LLC v. *Myco Industries, Inc. and John R. Choate*, Case No. 2:19-cv-13089-GAD-EAS, USDC, Eastern District of Michigan, Defendant's Disclosure of Invalidity Contentions, filed Jun. 1, 2020, 15 pages.
AlgerBrush II device. Bates No. PPM000714-PPM000716. 3 pages. (Oct. 11, 2018).
AlgerBrush II device. Bates No. PPM002763. 1 page. (Oct. 11, 2018).
AlgerBrush II device. Bates No. PPM002764. 1 page. (Oct. 11, 2018).
Blephex Advertisement. Bates No. B000584. 1 page. (Oct. 11, 2018).
Blephex Owner's Manual. Bates No. B000516-6000521. 6 pages. (Oct. 11, 2018).
Cotton swab. Bates No. PPM002765. 1 page. (Oct. 11, 2018).
Dremel brand rotary tool. Bates. No. PPM002766. 1 page. (Oct. 11, 2018).
Dremel brand rotary tool. Bates. No. PPM002767. 1 page. (Oct. 11, 2018).
Dremel brand rotary tool. Bates. No. PPM002768. 1 page. (Oct. 11, 2018).
Dremel brand rotary tool. Bates. No. PPM002769. 1 page. (Oct. 11, 2018).
Dremel brand rotary tool variable speed setting. Bates. No. PPM002770. 1 page. (Oct. 11, 2018).
Dremel Instructional Safety Manual. Bates No. PPM002771-PPM002793. 23 pages. (Oct. 11, 2018).
Dremel Quick Start Book. Bates No. PPM002794-PPM002804. 11 pages. (Oct. 11, 2018).
The Alger Company. Algerbrush and Algerbrush II. Bates No. PPM00283-PPM00292. 10 pages. (Jun. 24, 2016).
Weck-Cel brand surgical sponge. Bates No. PPM002805-PPM002808. 4 pages. (Oct. 11, 2018).

* cited by examiner

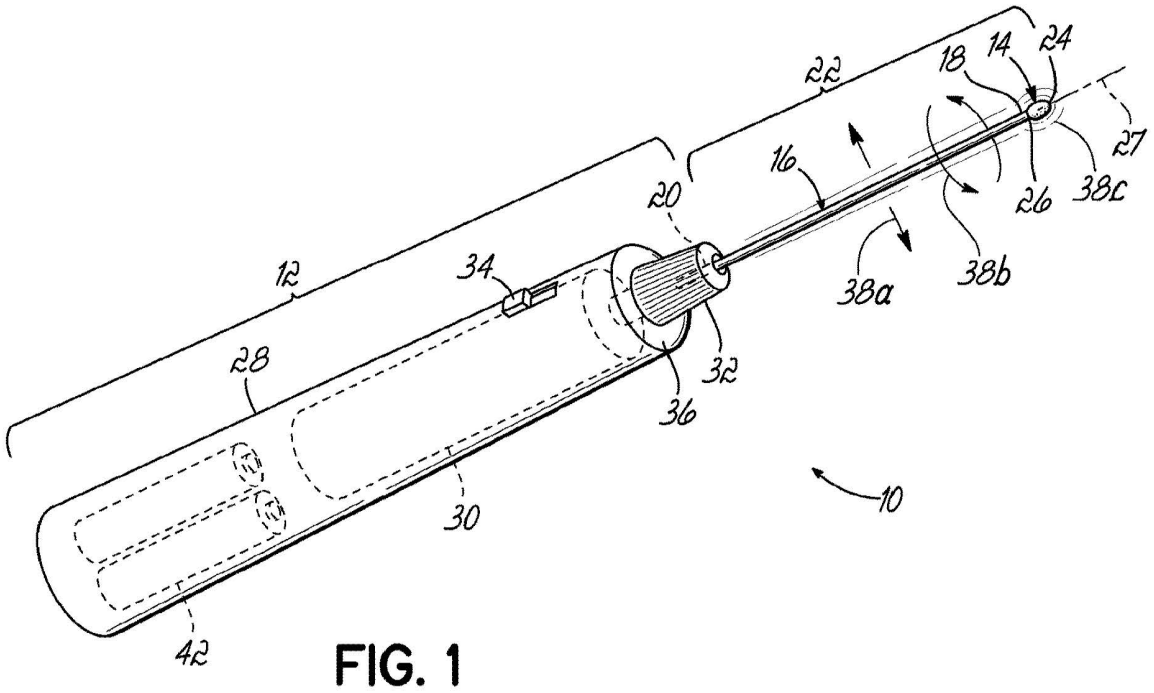
22
18
14
24
27
16
20
26
38c
12
34
38a
38b
28
32
36
10
30
42

FIG. 1

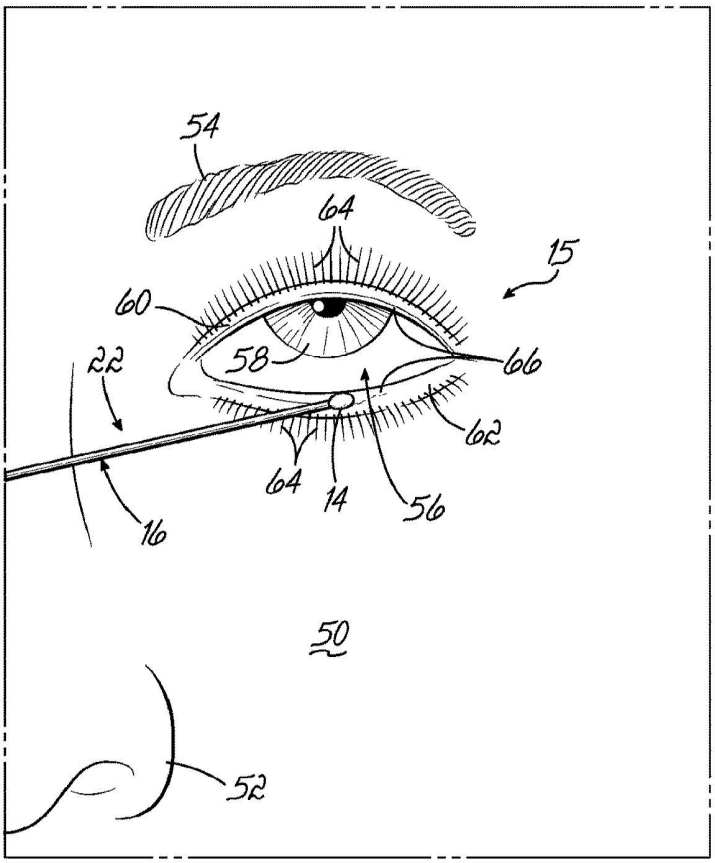
54
64
15
60
58
66
22
62
64
14
56
16
50
52

FIG. 5A

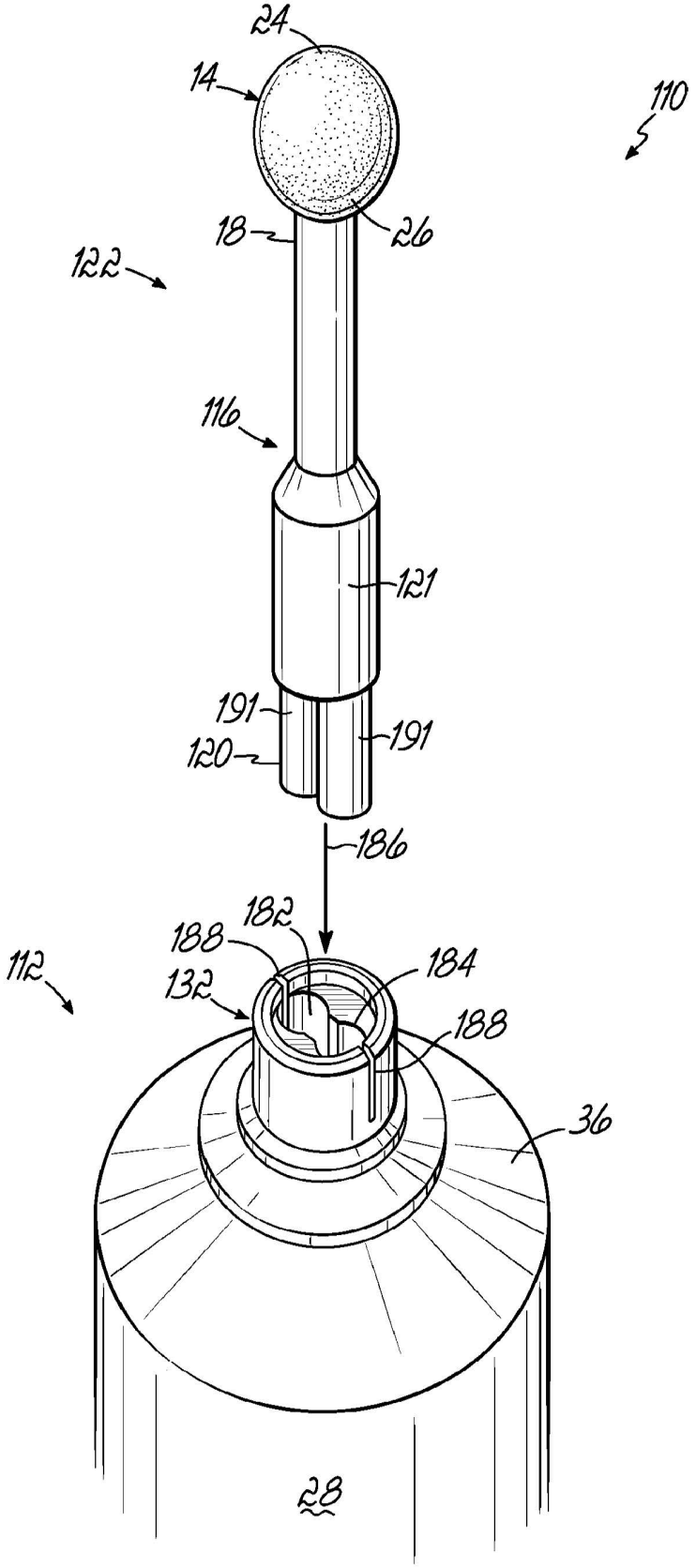
24
14
110
18
26
122
116
121
191
191
120
186
182
188
184
112
132
188
36
28

FIG. 2

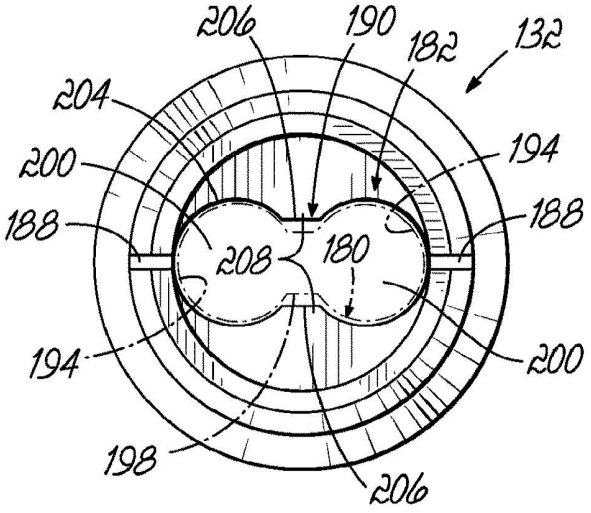

FIG. 4

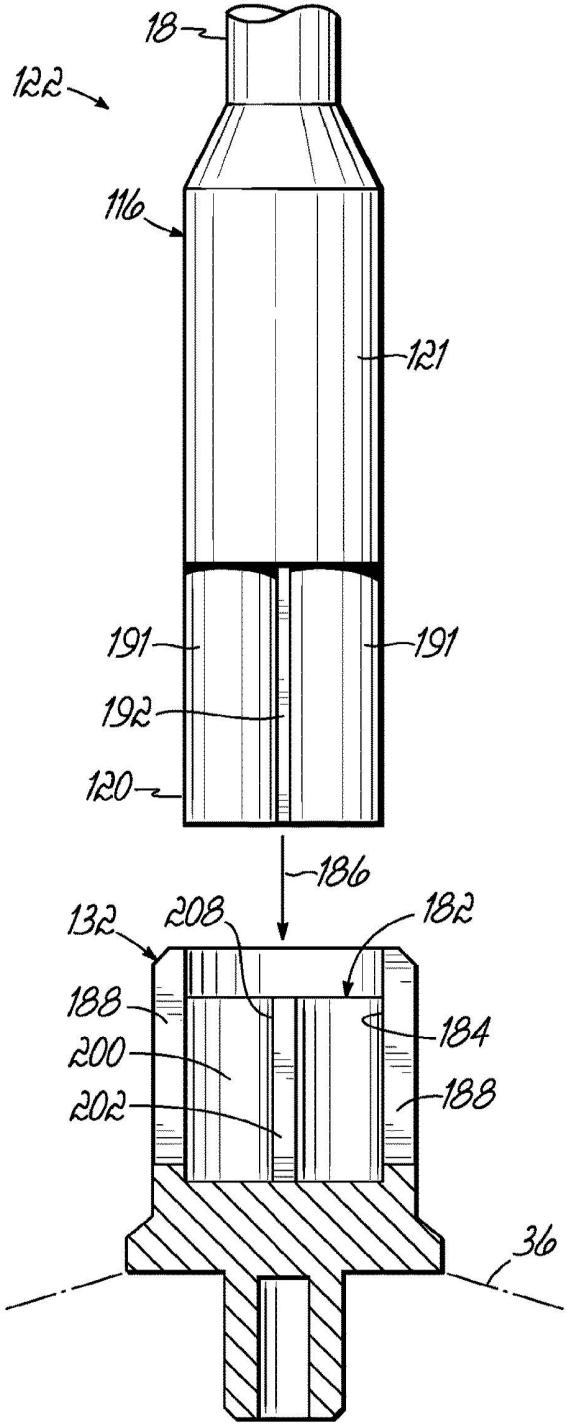

FIG. 3A

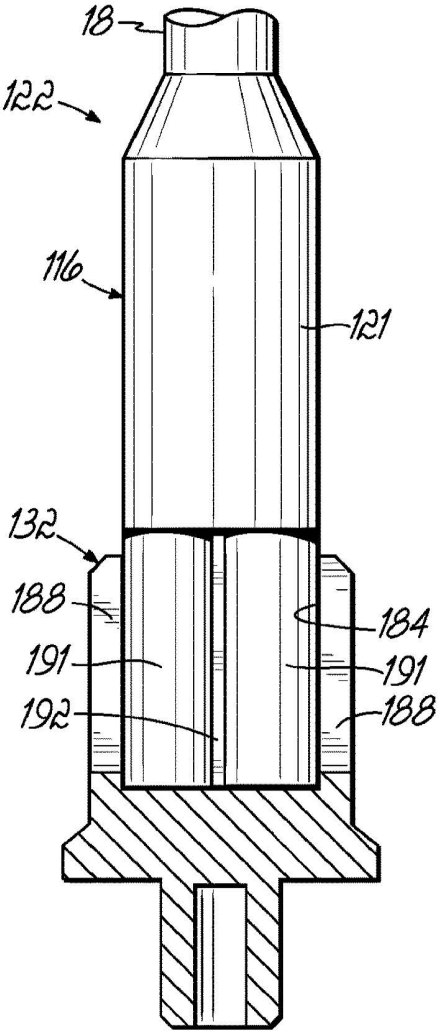

FIG. 3B

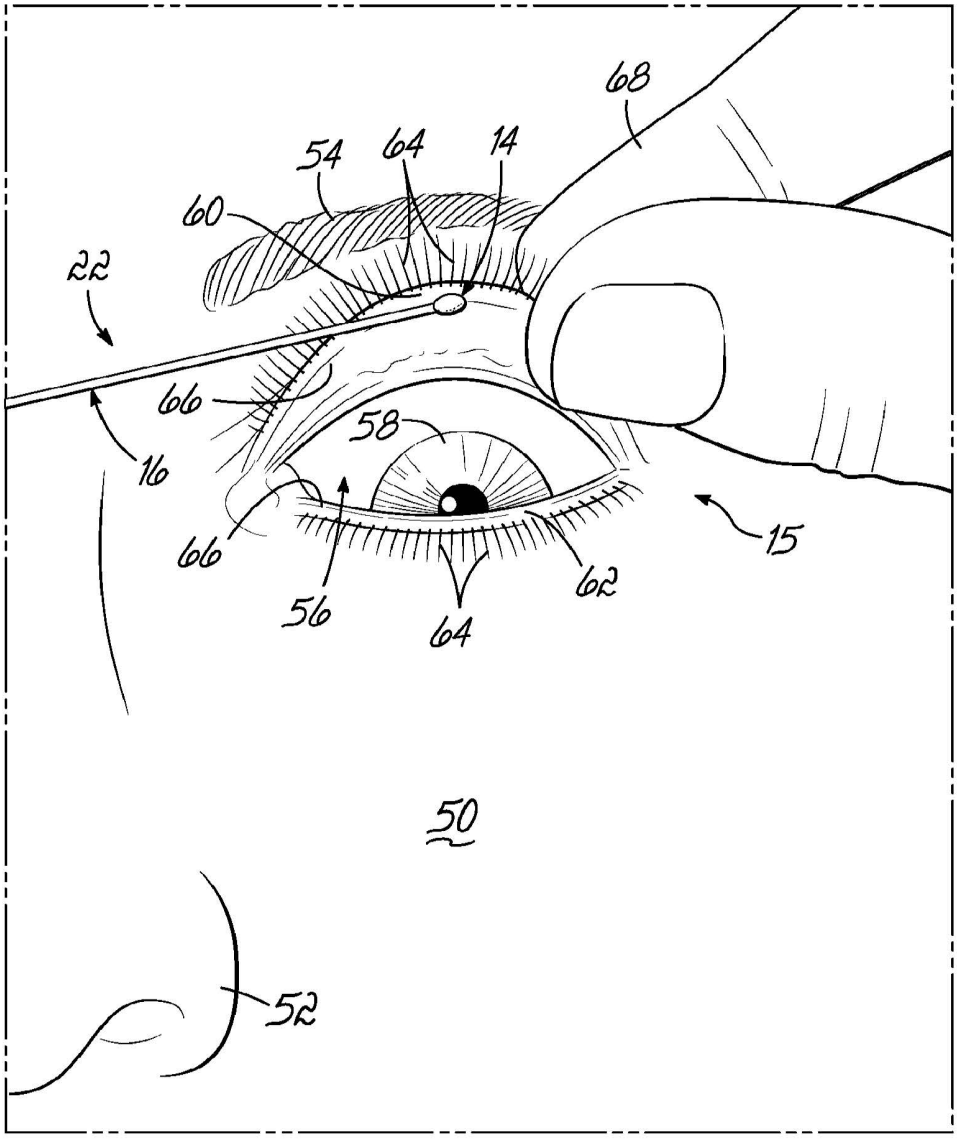

FIG. 5B

INSTRUMENT FOR TREATING AN OCULAR DISORDER

CROSS-REFERENCE TO RELATED APPLICATIONS

This application is a continuation of U.S. application Ser. No. 16/352,758, filed Mar. 13, 2019, now U.S. Pat. No. 10,449,087, issued Oct. 22, 2019, which is a continuation of U.S. application Ser. No. 13/949,365, filed Jul. 24, 2013, which is a continuation-in-part of U.S. application Ser. No. 13/556,729, filed Jul. 24, 2012, now U.S. Pat. No. 9,039,718, issued May 26, 2015, the disclosures of each are hereby incorporated by reference in their entirety.

TECHNICAL FIELD

The present invention relates generally to a method and apparatus for treating an ocular disorder, and more particularly, to treating eyelid margin disease.

BACKGROUND

Ocular disorders such as those relating to eyelid margin disease are particularly common pathological conditions of the ocular adenexa. By way of example, these disorders include blepharitis, meibomitis, and dry eye syndrome. Despite advances in opthamology and medical treatments in general, the recommended treatments for these exemplary common ocular disorders has remained essentially unchanged for decades.

Historically, treatment of eyelid margin disease begins and ends with the patient. The patient first begins to notice symptoms including eyelid redness, flaking of skin on the eyelids, crusting and/or cysts at the eyelid margins, and a gritty sensation of the eye culminating in irritation, burning, and reduced vision. Should these symptoms remain unchanged or worsen, the patient routinely seeks the advice of an eye specialist, such as an ophthalmologist. After carefully considering the patients' medical history and investigating various possible causes, the specialist may prescribe a hygienic home treatment procedure for the patient to perform regularly in conjunction with antibiotics and/or topical steroids until the disease subsides.

The goal of the hygienic home treatment procedure is to remove debris, oil, and scurf that have collected along the eyelid margin during progression of the disorder. Removal of this debris is critical to both healing the eye and preventing a resurgence of the disorder. Without proper, regular removal of accumulated debris, such ocular disorders regularly worsen despite periodic treatments.

Hygienic home treatment of such ocular disorders is generally a two-step process. First, the patient softens the debris and scurf by applying a warm compress, diluted baby shampoo, or a specialized liquid solution to the eyelid margin. This first step is intended to prepare the debris for removal while preventing further irritation to the eye. Second, the patient attempts to remove the debris by physically scrubbing the eyelid margin, the base of the eyelashes, and the pores of the meibomian glands. This scrubbing is routinely attempted with either a generic cotton swab, a fingertip, or a scrub pad placed over the fingertip and applied against the eye. By cleaning debris and scurf free from the base of the eyelashes and unclogging the pores of the meibomian glands, the patient may improve the overall health of the eyelid margin; thereby reducing irritation, burning, and other symptoms related to the disorder.

Unfortunately for many patients, such hygienic home treatment is met with limited success due to the practical difficulties of cleaning one's own eye with an imprecise instrument such as a fingertip or cotton swab. For instance, many patients do not have the necessary dexterity to manipulate their fingertip or a cotton swab along the eyelid margin. Moreover, a shake, tremor, or poor near vision further complicate such self-treatment. Even for those capable of incorporating hygienic home treatment into their daily routine, many, if not most people, are wary of placing objects near their eyes to actively scrub along the eyelid margin. Given this anxiety, discomfort, and the inability to specifically target debris deposits, patients routinely fail to totally cleanse the margin of the eyelid, the base of the eyelashes, and the meibomian glands. While the attempted treatment may temporarily abate the patient's symptoms, subtle continuation of the disease often persists; thus permitting a low-grade inflammation to develop and, ultimately lead to chronic dry eye syndrome. Further, this treatment is typically required to be performed for the rest of the patient's life; thereby, creating a substantial hurdle to regular and effective compliance during hygienic home treatment.

Evidence suggests that medical costs associated with dry eye syndrome, often induced by ocular diseases such as blepharitis, are currently over 68 billion dollars each year. Many of these expenses are needlessly incurred due to the patients' failure to perform regular and effective treatments resulting in increased doctor visits, medications, and artificial tears. These expenses create a significant financial burden for insurance carriers, especially Medicare, which provides primary medical coverage for many individuals particularly prone to dry eye disease, such as the elderly.

There is a need for a method and apparatus for use in treating ocular disorders, such eyelid margin diseases, that addresses present challenges and characteristics such as those discussed above.

SUMMARY

One exemplary embodiment of an instrument for the removal of debris from an eye during the treatment of an ocular disorder has a swab and a rigid member. The swab includes a tip portion sized to provide access to the debris on an eyelid of the eye. The rigid member has a distal end portion and a proximal end portion. The distal end portion of the rigid member is affixed to the swab, and the proximal end portion has a cross-sectional member profile. The cross-sectional member profile of the proximal end portion is non-circular and has a first groove. The first groove extends longitudinally along the proximal end portion for cooperating with a chuck such that rotation of the proximal end portion within the chuck is inhibited.

One exemplary embodiment of a device for the removal of a debris from an eye during the treatment of an ocular disorder has a mechanical drive unit, a chuck, and an instrument. The chuck is connected to and is rotatably driven by the mechanical drive unit. The chuck also has an aperture extending at least partially therethrough with a cross-sectional aperture profile. The instrument is removably secured within the aperture and has a swab and a rigid member. The swab includes a tip portion sized to provide access to the debris on an eyelid of the eye. The rigid member has a distal end portion and a proximal end portion. The distal end portion of the rigid member is affixed to the swab, and the proximal end portion has a cross-sectional member profile configured to cooperate with the cross-sectional aperture profile of the aperture such that rotation of the proximal end

portion within the aperture is inhibited. Accordingly, the mechanical drive unit rotatably drives the instrument via the chuck for removing debris.

Various additional objectives, advantages, and features of the invention will be appreciated from a review of the following detailed description of the illustrative embodiments taken in conjunction with the accompanying drawings.

BRIEF DESCRIPTION OF THE DRAWINGS

The accompanying drawings, which are incorporated in and constitute a part of this specification, illustrate embodiments of the invention and, together with a general description of the invention given above, and the detailed description given below serve to explain the invention.

FIG. **1** is a perspective drawing of one embodiment of the device.

FIG. **2** is a partially exploded perspective view of another embodiment of the device.

FIG. **3**A is an enlarged front view of the device of FIG. **2**.

FIG. **3**B is an enlarged front view of the device similar to FIG. **3**A, but showing an instrument removably secured to a chuck.

FIG. **4** is a top view of the chuck having a cross-sectional profile of the instrument in phantom lines.

FIG. **5**A is a drawing of the device of FIG. **1** treating a lower eyelid margin of an eye.

FIG. **5**B is a drawing of the device of FIG. **1** treating a upper eyelid margin of an eye.

DETAILED DESCRIPTION

With reference to FIG. **1**, an embodiment of the device **10** for treating an ocular disorder, particularly with respect to eyelid margin diseases, includes a mechanical drive unit **12** which operably moves a swab **14** to facilitate removal of debris from an eye **15** (see FIGS. **5**A-**5**B). The swab **14** is connected to a rigid member **16** having both a distal end portion **18** and a proximal end portion **20**. The swab **14** is affixed to the distal end portion **18** of the rigid member **16** to create an instrument **22**, which may be secured to the mechanical drive unit **12**. As shown in FIG. **1**, the proximal end portion **20** is removably secured to the mechanical drive unit **12** in order to transmit motion from the mechanical drive unit **12**, through the rigid member **16**, and to the swab **14**. It will be appreciated that any known method may be used to removably secure the instrument **22** to the mechanical drive unit **12**. Moreover, it will also be appreciated that device **10** is not intended to be limited to the instrument **22** being removably secured to the mechanical drive unit **12**. For instance, in another embodiment, the rigid member **16** may be either permanently secured or removably secured to either one of the swab **14** and/or the mechanical drive unit **12**.

In one aspect of the instrument **22**, the swab **14** includes a tip portion **24** and a base portion **26**. While the swab **14** may be of a size sufficient to access debris on the eye **15** as shown in FIGS. **1**, **5**A, and **5**B, at least the tip portion **24** is of a size sufficient to access debris on the eye **15**. For instance, the swab **14** has an approximate length between 1.0-3.0 millimeters and an approximate width of between 0.5-1.5 millimeters. More particularly, the swab **14** has an approximate length of 2 millimeters and an approximate width of 1 millimeter. It will be appreciated that the swab **14** may be manufactured of any material suitable for contacting the eye **15** without harming the eye **15**. However, as shown in the embodiment of FIG. **1**, the swab **14** is a sponge. As described herein, "sponge" broadly refers to any material that is soft, porous, and resilient. Particularly, the swab **14** is a medical grade sponge or a surgical grade sponge capable of removing debris from on the eye **15** without harming the eye **15**. As shown in the exemplary embodiment of FIG. **1**, the swab **14** is a methyl cellulose sponge. It will be appreciated; however, that similar materials capable of removing debris from on the eye **15** without harming the eye **15** are readily apparent and may also be used.

In another aspect of the instrument **22**, the rigid member **16** is a plastic, cylindrical shaft including a central axis **27**. The shaft extends along the central axis **27** between the mechanical drive unit **12** and the swab **14**. The rigid member **16** is sufficiently rigid to effectively transmit motion from the mechanical drive unit **12** to the swab **14**. As shown in FIG. **1**, the swab **14** is permanently affixed to the distal end portion **18** by forming the base portion **26** to the rigid member **16** during manufacturing. However, it will be appreciated that any known method of affixing the swab **14** to the rigid member **16** may be used. In an exemplary embodiment, any material or shaft shape may be used so long as the rigid member **16** is rigid enough to transmit sufficient motion from the mechanical drive unit **12** to the swab **14** in order to remove debris from on the eye **15**.

Furthermore, the mechanical drive unit **12** includes a body **28**, an electric motor **30**, a chuck **32**, and a control switch **34**. As such, the device **10** is electromechanical in nature. In an exemplary embodiment, the electric motor **30**, the chuck **32**, and the control switch **34** are integrated into the body **28** so that the electromechanical device **10** is configured to be handheld as shown in FIG. **1**. However, the electromechanical device **10** is not intended to be limited to a handheld configuration, and it will be appreciated that other configurations of the device **10** are readily apparent.

According to the present embodiment, the electric motor **30** is positioned within the body **28**. The chuck **32** is operably connected to the electric motor **30** at a forward end portion **36** of the body **28**. The proximal end portion **20** of the rigid member **16** is removably secured to the chuck **32**. As described herein, the chuck **32** is generally any element capable of removably securing the rigid member **16** to the mechanical drive unit **12**. As such, the chuck **32** may be tightened or loosened to respectively secure or remove the instrument **22** to the chuck **32**. Thereby, the operable connection of the electric motor **30** transmits a movement **38** through the chuck **32** to the instrument **22**. The movement **38** is any motion relative to the mechanical drive unit **12** or, more particularly, to the body **28**, that creates relative motion to the debris on the eye **15** such that upon contacting the debris with the swab **14**, the debris is removed. As shown, the movement **38** may include, but is not limited to, a reciprocating movement **38***a*, a rotating movement **38***b*, or a vibrating movement **38***c*. The reciprocating movement **38***a* may be either along the central axis **27** of the rigid member **16** or orthogonal to the central axis **27** of the rigid member **16**. In addition, the speed of the movement **38** of the swab **14** is any speed sufficient to remove debris from on the eye **15**. It will be appreciated that the speed discussed herein collectively refers to both relative speed of the swab **14** and the frequency of the movement **38** of the swab **14**. For instance, the frequency may range from sonic frequencies to ultrasonic frequencies. Furthermore, the speed of the swab **14** may be variable or otherwise selectable such that an operator of the device **10** may select a desirable speed or a forward or reverse direction via the control switch **34**.

Moreover, the control switch **34** is operably connected to the electric motor **30** and an electric power source **42** to power the device **10** on and off. In an exemplary embodiment, the electric power source **42** is a battery power source **42** contained within the body **28**. The battery power source **42** may be either disposable or rechargeable. The electric power source **42** operably provides electrical power to the electric motor **30**, which the operator controls via the control switch **34**. It will be appreciated that any known control switch **34** or plurality of control switches **34** may be configured to power the device **10** on and off.

Furthermore, it will be appreciated that the device **10** may be manufactured from various materials suited to specific environments of use. For instance, operators within the professional clinic setting may desire a durable, reusable mechanical drive unit **12** and single-use instruments **22**. Some examples of such a professional mechanical drive unit **12** is an Algerbrush I, an Algerbrush II, or similar medical device. However, operators within the home treatment setting may desire the device **10** to be generally disposable and single-use.

FIGS. **2-4** show another embodiment of a device **110** for treating an ocular disorder. The device **110** includes an instrument **122** removably secured to a mechanical drive unit **112**. The device **110** provides for safe, simple, and reliable removal and replacement of disposable, single-use instruments **122** between treatments. Specifically, the mechanical drive unit **112** has a chuck **132** projecting from the forward end portion **36** of the body **28** and configured for unique frictional engagement with the instrument **122**. In this respect, the attachment between the chuck **132** and the instrument **122** discourages improper installation and inhibits the use of other, unsuitable instruments that may create unnecessary risk of damaging the eye **15** (see FIG. **5**A) during use. Moreover, the instrument **122** and chuck **132** provide for simple frictional attachment via insertion and withdrawal (i.e., push-in and pull-out) of the instrument **122** without collars, clasps, or other mechanisms. The chuck **132** also effectively transmits torque to the instrument **122** without generating damaging stress concentrations in either the instrument **122** or the chuck **132**. The instrument **122** includes a rigid member **116** having the swab **14** projecting from the distal end portion **18** and, as such, like numbers for the device **110** refer to like features previously described above.

With respect to FIG. **2**, the rigid member **116** further includes a proximal end portion **120** sized for insertion into the chuck **132** and an intermediate portion **121** extending between the distal end portion **18** and the proximal end portion **120**. The intermediate portion **121** and the distal end portion **18** are both generally cylindrical; however, the intermediate portion **121** has a larger diameter than the distal end portion **18** and tapers toward the distal end portion **18**. Also, the proximal end portion **120** has a width that is generally as wide as the diameter of the intermediate portion **121**, but a depth generally less than the diameter of the intermediate portion **121** as shown in FIG. **4**. However, it will be appreciated that the relative sizes of the portions of the instrument **122**, such as diameters, widths, and depths, may vary in accordance with the invention described herein.

With respect to FIGS. **2-4**, the proximal end portion **120** has a cross-sectional member profile **180** that inserts into an aperture **182** and frictionally engages a sidewall **184** of the chuck **132** for removably attaching the instrument **122** to the mechanical drive unit **112**. Thus, the proximal end portion **120** may be inserted into the aperture **182** as indicated by arrow **186** and withdrawn in the opposite direction to remove the instrument **122** from the chuck **132**. The frictional engagement is generally created by the proximal end portion **120** being sized with an interference fit within the aperture **182** against the sidewall **184**. However, the engagement is enhanced by a pair of opposing slots **188** extending longitudinally through the sidewall **184**. The slots **188** create resiliency within with sidewall **184** that further aid in frictionally engaging the proximal end portion **120** of the instrument **122**. In addition, as the aperture **182** receives the proximal end portion **120**, the slots **188** vent ambient air from within the aperture **182** to inhibit air pressure buildup that may force the instrument **122** from the chuck **132** after insertion. However, it will be appreciated that other structures may be used to create resiliency and vents. For example, the chuck **132** may be manufactured from a relatively resilient material, and the aperture **182** may include a vent of any shape through another portion of the chuck **132** for releasing air pressure. In an alternative embodiment, the proximal end portion **120** may be removably attached to the chuck **132** via other structures or connectors, such as a collar or clasp. In any case, the invention is not intended to be limited to the exemplary embodiments described herein.

FIGS. **3**A-**4** show an exemplary embodiment of the cross-sectional member profile **180** defined by the proximal end portion **120** that inserts into the aperture **182**, at least a portion of which has a cross-sectional aperture profile **190** for frictionally mating with the cross-sectional member profile **180**. The cross-sectional member profile **180** is generally longitudinally uniform along the proximal end portion **120** with a constant cross-section. However, it will be appreciated that the proximal end portion **120** may taper toward the chuck **132** or have another suitable shape for insertion into the aperture **182** in an alternative embodiment.

More particularly, the proximal end portion **120** has a pair of generally parallel cylindrical portions **191** connected by a generally linear tab portion **192** therebetween. As such, the proximal end portion **120** defines the cross-sectional member profile **180** as a pair of curved, opposing major arc surfaces **194** connected by a pair of opposing linear surfaces **196**. Accordingly, the generally cylindrical portions **191** at least partially define a groove **198** extending longitudinally along the proximal end portion **120**. According to an exemplary embodiment, the linear tab portion **192** and generally cylindrical portions **120** define a pair of opposing grooves **198** extending longitudinally along the proximal end portion **120**.

In order to receive the proximal end portion **120** of the instrument **122**, the sidewall **184** defines at least a portion of the aperture **182** with the cross-sectional aperture profile **190**. As such, the cross-sectional aperture profile **190** has similar, mating surfaces to the cross-sectional member profile **180**. The aperture **182** has a pair of generally parallel cylindrical hole portions **200** connected by a generally linear slot portion **202** therebetween. The proximal end portion **120** thus defines the cross-sectional aperture profile **190** as a pair of curved, opposing major arc surfaces **204** connected by a pair of opposing linear surfaces **206**. Accordingly, the generally cylindrical hole portions **200** and linear slot portion **202** define a pair of opposing projections **208** extending longitudinally along the sidewalls **184** within the aperture **182**.

As the chuck **132** is operatively rotated, the sidewall **184** transmits torque to the proximal end portion **120** and, in turn, rotates the instrument **122**. Effectively, each projection **208** is keyed to the respective groove **198** for transmitting the torque. Furthermore, the exemplary embodiment of the

cross-sectional aperture profile **190** inhibits insertion of unsuitable instruments while continuing to effectively engage the proximal end portion **120** with many stress-reducing curved surfaces. However, it will be appreciated that the exemplary embodiment of the aperture **182** and the proximal end portion **120** may be other cooperating shapes providing for removable attachment. To the extent other profiles may function similarly to the embodiment described above, it will be appreciated that the exemplary embodiment of the instrument **122** shown in FIGS. **2-4** may have ornamental characteristics, as well.

With respect to FIGS. **5**A and **5**B, the device **10** is used in a method for treating ocular disorders of the eye **15**. While the method for treating ocular disorder will be described with respect to device **10**, it will be appreciated that the device **110** (see FIG. **2**) may be similarly used. For purposes of describing the environment in which this method occurs, FIGS. **5**A and **5**B generally show a portion of a face **50** having a nose **52**, an eyebrow **54**, and the eye **15**. The eye **15** described herein generally includes, but is not limited to, an eyeball **56** including a cornea **58**, an upper eyelid margin **60**, a lower eyelid margin **62**, and a plurality of eyelashes **64**. In the exemplary embodiment, the device **10** is the swab **14** operably connected to the mechanical drive unit **12** thereby creating the electromechanical device **10** for use in removing debris deposited on at least one of either the upper eyelid margin **60** or the lower eyelid margin **62**.

As shown in FIG. **1**, an instrument **22** is removably secured to the chuck **132**, after which time, the electromechanical device **10** may be powered on and set to a desirable speed by the operator; thereby, the operator effects movement of the swab **14** relative to the electromechanical device **10**. Such movement may include, but is not limited to, reciprocating the swab **14** as shown by arrows **38***a*, rotating the swab **14** as shown by arrow **38***b*, and/or vibrating the swab **14** as shown by lines **38***c*. The swab **14** is positioned near the eyeball **56** and along either one of the upper or lower eyelid margins **60**, **62** for treatment. In the exemplary embodiment as shown in FIGS. **5**A and **5**B, the swab **14** moves with constant movement relative to the electromechanical device **10** while near the eyeball **56**. Alternatively, it may be desirable to vary the movement of the swab **14** relative to the electromechanical device **10** such that the operator has greater control of treating the ocular disorder.

In an exemplary embodiment, the operator preferably targets the debris present on the eye **15** with the swab **14** of the electromechanical device **10**. The debris may be targeted by visually inspecting the eye **15** with or without the aid of a magnification device. Once the debris is targeted, the swab **14** contacts the portion of the eye **15** that includes the debris. For purposes of treating the ocular disorder, the debris may be removably attached on either the upper and lower eyelid margins **60**, **62** or the plurality of eyelashes **64**. Thereby, upon contacting the portion of the eye **15** with the debris, the swab **14** impacts the debris to remove the debris from the eye **15**. Furthermore, a liquid solution configured to loosen the debris may be absorbed within the swab **14** to further aid in removing the debris from the eye **15** and/or minimizing irritation to the eye **15**. It will be appreciated that any liquid solution sufficiently capable of loosening the debris to further aid in removing the debris may be so used.

The electromechanical device **10** operably drives the swab **14** to break the debris free from either of the upper or lower eyelid margins **60**, **62**. Further treatment may be performed to enhance the effects of the debris removal by helping to improve healing and reducing further infection of the eye **15**. Such treatment may include scrubbing, exfoliating, or buffing the eyelid margin or un-roofing a meibomian gland **66** with the swab **14**.

In another aspect, the cornea **58** of the eye **15** is directed away from the position of the swab **14** to minimize contacting the swab **14** to the cornea **58** during treatment. As shown in FIG. **5**A, while treating the lower eyelid margin **62**, the eyeball **56** directs the cornea **58** upward, thereby bringing the cornea **58** closer to the upper eyelid margin **60** than the lower eyelid margin **62**. However, as shown in FIG. **5**B, while treating the upper eyelid margin **60**, the eyeball **56** directs the cornea **58** downward, thereby being closer to the lower eyelid margin **62** than the upper eyelid margin **60**.

As shown in FIG. **5**A, accessing the portion of the eye **15** with the debris, such as the upper or lower eyelid margins **60**, **62**, may be accomplished without further moving or lifting other portions of the eye **15**. However, as shown in FIG. **5**B, if accessing the portion of the eye **15** with the debris is difficult, the operator may use a hand **68**, or similar gripping device, to move or lift a portion of the eye **15**, such as lifting the upper or lower eyelid margin **60**, **62** from against the eyeball **56**, to improve access to the debris. Such lifting may be particularly beneficial for improving access to the meibomian gland **66**. It will be appreciated that, in order to improve access to the debris, any portion of the eye **15** may be moved or lifted regardless of which eyelid margins **60**, **62** are being treated. FIGS. **5**A and **5**B are merely exemplary embodiments showing both non-assisted access and assisted access of the swab **14** to the eye **15** respectively.

Furthermore, the method of treating the ocular disorder may be repeated as directed by a physician or patient in order to sufficiently remedy the disorder. For instance, in the case of physician directed treatment, the physician may direct the patient to visit the physician in periodic intervals for treating the ocular disorder with the electromechanical device **10**. More specifically, the physician directs the patient to visit the physician in periodic monthly or weekly intervals so that the physician may treat the patient. In the exemplary embodiment, periodic intervals are treatments with the electromechanical device **10** once every month. It will be appreciated that any periodic interval of repeating the method of treating the ocular disorder with the electromechanical device **10** may be so used.

Alternatively, in the case of home treatment by the patient, the patient may treat his or her own ocular disorder with the electromechanical device **10** in periodic intervals. However, according to the exemplary embodiment, the physician repeats the method of treating the ocular disorder in periodic intervals with the electromechanical device **10** and the patient also treats the ocular disorder in between physician treatments using traditional treatments. This method of treating the ocular disorder with the electromechanical device **10** in treatments occurring in periodic intervals achieves superior removal of the debris compared to traditional treatments, because the periodic intervals act as reminders to the patient. Thus, the patient is less likely to forget to treat the ocular disorders once symptoms begin to subside, which may result in a resurgence of the disorder. However, the traditional treatments, despite being less effective, may be performed regularly by the patient to further treat the ocular disorder in conjunction with physician treatments with the electromechanical device **10**.

In any case, the physician or patient treats the ocular disorder until the ocular disorder is sufficiently healed and thereafter to prevent a recurrence of the disorder. It will be appreciated that sufficiently healed refers to the dissipation of inflammation and/or discomfort related to the debris within the eye **15** at which time the treatments by the

physician may decrease in frequency, but may continue in periodic intervals during home treatment by the patient. After each treatment, the physician or patient may remove the used instrument **22** from the chuck **32** and dispose of the used instrument **22**. The used instrument **22** may then be replaced with a new instrument **22** for future treatments. In the event that the inflammation, discomfort, or debris worsens, the method of treating the ocular disorder may resume as the physician or patient desires. However, the treatment may be required in periodic intervals throughout the remainder of the patient's life.

While the present invention has been illustrated by the description of one or more embodiments thereof, and while the embodiments have been described in considerable detail, they are not intended to restrict or in any way limit the scope of the appended claims to such detail. Additional advantages and modifications will readily appear to those skilled in the art. The invention in its broader aspects is therefore not limited to the specific details, representative apparatus and method and illustrative examples shown and described. Accordingly, departures may be from such details without departing from the scope or spirit of the general inventive concept.

What is claimed is:

1. A method of treating an eye for an ocular disorder with a contact member comprising a soft and resilient material operably connected to an electromechanical device, wherein the eye has an eyelid margin and an eyeball and includes a removable debris, the method comprising:

effecting movement of the contact member relative to the electromechanical device, the contact member having at least a portion thereof configured to access a portion of the eyelid margin, wherein the movement comprises electromechanical rotation of the contact member;

while the contact member is being moved by the electromechanical device, contacting the eyelid margin with the contact member without lifting the eyelid margin from the eye so as to scrub the portion of the eyelid margin that includes the removable debris with the contact member thereby impacting the debris with the contact member to remove debris from the eye.

2. The method of claim **1**, wherein removing debris further comprises at least one of:

exfoliating the eyelid margin;

unroofing a plurality of meibomian glands along the eyelid margin;

buffing the eyelid margin; or

breaking the debris free of the eyelid margin.

3. The method of claim **1**, wherein the eye has an eyeball and further includes:

positioning the contact member near the eyeball along the eyelid margin; and

targeting the debris with the contact member.

4. The method of claim **1**, wherein the movement of the contact member is at least one of vibrating the contact member or reciprocating the contact member.

5. The method of claim **1**, further comprising repeating the effecting movement, the contacting the portion of the eye, and the impacting the debris with the contact member to remove the debris process of claim **1** after periodic intervals until the ocular disorder is sufficiently remedied.

6. The method of claim **1**, wherein the contact member is a medical grade sponge for accessing the eyelid margin.

7. The method of claim **1**, wherein the contact member has a length and a width, the length being between 1.0 millimeter and 2.0 millimeters and the width being between 0.5 millimeters and 1.5 millimeters for accessing an inner edge portion of the eyelid margin.

8. The method of claim **1**, wherein the contact member is generally egg-shaped having an approximate length of 2.0 millimeters and an approximate width of 1.0 millimeter for accessing an inner edge portion of the eyelid margin.

9. The method of claim **1**, wherein the portion of the eyelid margin includes eyelashes of the eyelid margin.

10. The method of claim **1**, wherein the soft and resilient material is absorbent.

11. The method of claim **1**, wherein the soft and resilient material is porous.

12. A method of treating an eye for an ocular disorder with a contact member comprising a soft and resilient material operably connected to an electromechanical device, wherein the eye has an eyelid margin and an eyeball and includes a removable debris, the method comprising:

effecting rotational movement of the contact member relative to the electromechanical device;

while the contact member is being moved by the electromechanical device, contacting at least a portion of the eyelid margin that includes the removable debris with the contact member without lifting the eyelid margin from the eye thereby impacting the debris with the contact member to remove debris from the eye and unroofing a plurality of meibomian glands along the eyelid margin.

13. The method of claim **12**, wherein removing debris further comprises at least one of:

scrubbing the eyelid margin;

exfoliating the eyelid margin;

buffing the eyelid margin; or

breaking the debris free of the eyelid margin.

14. The method of claim **12**, wherein the portion of the eyelid margin includes eyelashes of the eyelid margin.

15. The method of claim **12**, and wherein the method further comprises:

positioning the contact member near the eyeball along the eyelid margin; and

targeting the debris with the contact member.

16. The method of claim **12**, wherein the contact member is a medical grade sponge for accessing the eyelid margin.

17. The method of claim **12**, wherein the soft and resilient material is absorbent.

18. The method of claim **12**, wherein the soft and resilient material is porous.

* * * * *