(12) INTERNATIONAL APPLICATION PUBLISHED UNDER THE PATENT COOPERATION TREATY (PCT)

(19) World Intellectual Property Organization
International Bureau

(43) International Publication Date
28 May 2009 (28.05.2009)

PCT

(10) International Publication Number
WO 2009/066077 A1

(51) International Patent Classification:
A61H 23/02 (2006.01) *A61H 7/00* (2006.01)

(21) International Application Number:
PCT/GB2008/003900

(22) International Filing Date:
21 November 2008 (21.11.2008)

(25) Filing Language: English

(26) Publication Language: English

(30) Priority Data:
0722890.1 21 November 2007 (21.11.2007) GB

(71) Applicant *(for all designated States except US)*: **INNOVATIVE TREATMENT SOLUTIONS LIMITED** [GB/GB]; 31A Clearwater Way, Lakeside, Cardiff CF23 6DL (GB).

(72) Inventor; and
(75) Inventor/Applicant *(for US only)*: **PARSLOE, Colin** [GB/GB]; Innovative Treatment Solutions Limited, 31A Clearwater Way, Lakeside, Cardiff CF23 6DL (GB).

(74) Agents: **BALDOCK, Sharon, Claire** et al.; Boult Wade Tennant, Verulam Gardens, 70 Gray's Inn Road, London WC1X 8BT (GB).

(81) Designated States *(unless otherwise indicated, for every kind of national protection available)*: AE, AG, AL, AM, AO, AT, AU, AZ, BA, BB, BG, BH, BR, BW, BY, BZ, CA, CH, CN, CO, CR, CU, CZ, DE, DK, DM, DO, DZ, EC, EE, EG, ES, FI, GB, GD, GE, GH, GM, GT, HN, HR, HU, ID, IL, IN, IS, JP, KE, KG, KM, KN, KP, KR, KZ, LA, LC, LK, LR, LS, LT, LU, LY, MA, MD, ME, MG, MK, MN, MW, MX, MY, MZ, NA, NG, NI, NO, NZ, OM, PG, PH, PL, PT, RO, RS, RU, SC, SD, SE, SG, SK, SL, SM, ST, SV, SY, TJ, TM, TN, TR, TT, TZ, UA, UG, US, UZ, VC, VN, ZA, ZM, ZW.

(84) Designated States *(unless otherwise indicated, for every kind of regional protection available)*: ARIPO (BW, GH, GM, KE, LS, MW, MZ, NA, SD, SL, SZ, TZ, UG, ZM, ZW), Eurasian (AM, AZ, BY, KG, KZ, MD, RU, TJ, TM), European (AT, BE, BG, CH, CY, CZ, DE, DK, EE, ES, FI, FR, GB, GR, HR, HU, IE, IS, IT, LT, LU, LV, MC, MT, NL, NO, PL, PT, RO, SE, SI, SK, TR), OAPI (BF, BJ, CF, CG, CI, CM, GA, GN, GQ, GW, ML, MR, NE, SN, TD, TG).

Published:
— *with international search report*

(54) Title: APPARATUS AND METHOD OF MASSAGE

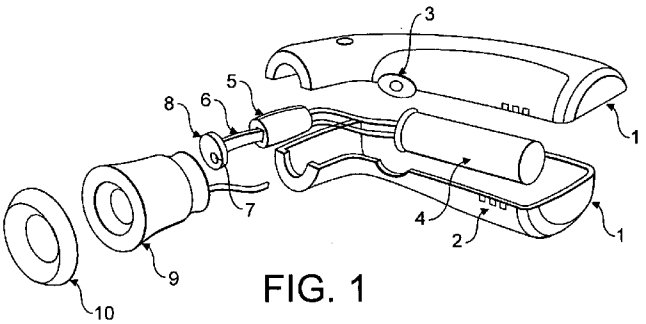

FIG. 1

(57) Abstract: The invention relates to an apparatus for melting and expressing material from blocked glands in a mammalian eyelid comprising a massager and a deformable eyelid interface having a heater and arranged so that, in use, a massaging nodule causes the eyelid interface to massage the eyelid. The apparatus additionally comprises a scrubbing element and further comprises a reservoir in fluid connection with the eyelid interface for the storage and subsequent application to the eyelid of fluid and or gel which may be for lubrication or may contain pharmaceutical ingredients. Also disclosed is a method for unblocking blocked glands.

WO 2009/066077 A1

APPARATUS AND METHOD OF MASSAGE

Field of the Invention

The present invention relates to an apparatus and methods for therapeutic or prophylactic massage. Particularly, although not exclusively, the present invention relates to a device and methods for using such a device for therapeutic or prophylactic massage of mammalian eyelids.

Background

The tear film consists of 3 main components: Mucin from goblet cells, water and an oily compound secreted from modified sebaceous glands in the eyelid.

The secretions from the modified sebaceous glands have various functions including:

1) Prevention of tear overflow;
2) Formation of a watertight seal on the closure of the eyelids;
3) Prevention of maceration of the lid-margin skin by tears;
4) Retardation of evaporation of the tear film;
5) Prevention of contamination of the tear film by the secretions of unmodified skin sebaceous glands;
6) Lowering the surface tension of tears resulting in thickening of the aqueous phase; and
7) Providing a smooth surface for the refraction of light.

-There are two distinct conditions involving inflammation of the eyelids that may occur concurrently. There is the inflammation of the base of the eyelashes (anterior blepharitis) and there is the inflammation of the modified sebaceous glands of the eyelids (posterior blepharitis).

With inflammation of the base of the eyelashes a bacterial infection usually results in the release of toxins that can cause a characteristic row of punctuate epithelial erosions along the lower half of the cornea. As the body fights the bacteria, proteins are released. This results in antigen-antibody complexes. These can deposit onto the cornea and are called marginal infiltrates. A hypersensitivity reaction may develop called Phlyctenular Keratitis and is characterised with limbal nodules. Inflammation of the base of the lashes may also lead to the formation of a corneal ulcer. In people who wear contact lenses the inflammation of the base of the lashes can result in deposits on the contact lens resulting ultimately in contact lens intolerance and cessation of contact lens wear. Inflammation of the base of the lashes also leads to the permanent loss of lashes or abnormal positioning of the lashes.

Known methods for scrubbing the lashes are either the use of cotton wool or a woven cloth like material. Patients are often asked to make their own concentrate mixture of an un-medicated soap solution.

Inflammation of the modified sebaceous glands results from a change in their lipid content or hyperkeratinisation of the gland's central duct. Both of these underlying pathologies

result in the obstruction of the outflow from the duct. If the gland is blocked it may swell up and cause a painless lump on the eyelid, or this swollen gland may become infected resulting in a painful red pustular mass in the eyelid. Eventually the gland becomes fibrosed and is permanently destroyed. Fibrosed glands often result in a loss of the normal anatomy of the eyelids resulting in increased tear film instability and eyelashes may become misdirected resulting in them growing towards the cornea causing a great deal of irritation to the patient. Loss of function and eventual loss in the number of glands results in a reduction in the oil component of the tear film. This is a leading cause of dry eye syndrome.

Known methods for treating the inflammation of the modified sebaceous glands include the application of hot compresses and subsequent manipulation of the eyelid. The hot compress "melts" or substantially decreases the viscosity of the modified sebum build up within the gland and subsequent massage may be effective in expressing the less viscous modified sebum from the gland. There are obvious drawbacks associated with this method, such as:

a) contamination by unsterilised items touching the eye and potentially worsening any infection already present,

b) potentially overheating the eye causing damage and discomfort,

c) not applying sufficient heat to treat the disease resulting in high recurrence and poor compliance, and

d) not massaging the lids for a sufficient amount of time or using an ineffective massage action.

Prior art devices designed for use on the eyelids include devices that either apply heat or massaging or a combination of heat and massaging to the lids. These limited steps effectively only deal with one element of Blepharitis. Additional treatment is required to clean the lashes and the patient also needs to remember to take any other medication used to manage this disease. This complex regime often results in poor patient compliance.

By only treating one element of the disease there is a much higher recurrence rate and therefore greater potential for the long-term loss of the limited number of glands in the eye. The currently known and used method of cleaning the eyelids requires a complex mixing of cleaning agents and a level of dexterity.

Manually instilling topical pharmacological treatment to the eyes is generally considered difficult by patients and is associated with poor compliance and contamination of the containers housing the pharmacological agents. This again increases the drop out rate of treatment and increases the risk of spreading any infection and corneal ulceration.

Many patients do not persist with the treatment as it is too complicated to remember to perform all of the required functions. It takes time and is relatively technically difficult to perform each function correctly. Treatment also involves the use of a number of different instruments and mixing of cleaning agents or pharmacological agents. Topical pharmacological agents need to kept clean and often become contaminated leading in the best scenario to wastage, and in the worst, to further medical complications.

Inflammation of the base of the eyelashes (anterior blepharitis) and inflammation of the modified sebaceous glands of the eyelids (posterior blepharitis) are generally treated as separate conditions. However, the inventors have surprisingly found that treating anterior blepharitis at the same time as posterior blepharitis leads to a reduction in the return of the posterior blepharitis symptoms.

It would be useful if there were a device available to carefully control heat applied to the eyelid and additionally reduce the likelihood of contamination of the eye by foreign bacteria. Indeed it would be useful if a device were available that could address some of the shortcomings of the art known treatment methods.

It is an object of the present invention to provide a device for heating and massaging the eyelid with concomitant scrubbing of the lash bases or to at least provide the public or medical community with a useful alternative to prior art devices.

It would be useful if there was a device that could be used in the comfort of a patients own home and especially if this were a hand held device that the person could operate with the minimum of effort.

Statement of Invention

In a first aspect, the present invention provides an apparatus for melting and expressing material from blocked glands in a mammalian eyelid having: a massager and a

deformable eyelid interface having a heater and arranged so that, in use, the massager causes the eyelid interface to massage the eyelid wherein the apparatus additionally comprises a scrubbing element and further comprising a reservoir in fluid connection with the eyelid interface for the storage and subsequent application to the eyelid of fluid and or gel.

The massager may preferably be powered by any motor that converts an electrical current into mechanical energy such as a DC motor or AC motor or any other motor known in the art. A vibrational massaging mechanism carries the risk of transferring excessive amounts of energy to the eye. This may potentially damage the corneal epithelium or the connective tissue of the eyelid.

In preferred embodiments, the electric motor is a standard DC motor.

The massager may be any device adapted to convert electrical energy into mechanical energy. In preferred embodiments the massager may comprise one or more massaging nodules which may be any protuberance which, in use, is able to push through the deformable eyelid interface and exert a force on that portion of the eyelid that the massaging nodule is passing over.

In preferred embodiments, the massaging nodule(s) comprises an approximately hemispherical protuberance protruding from a substantially circular disc. In other embodiments the massaging nodules may form a series of differing sizes and/or shapes.

In one particularly preferred embodiment the massager comprises a substantially circular disc mounted to the axle of an electric motor. In use the one or more massaging nodules describe a circular path by being positioned in a manner offset with respect to the axis of rotation of the electric motor.

Preferably, the substantially circular disc may be substantially semi spherical and concave so that the radius of the semi sphere corresponds to that of the subject eyeball. In one preferred embodiment the circular disc is substantially flat and a plurality of nodules are present, sized such that those nearer the periphery of the disc are larger than those nearer the centre such that the shape of the deformation of the eyelid interface in contact with the nodules approximates the curvature of the subject eyeball.

In use, the disc is able to rotate in one direction or to rotate in the opposite direction or is able also to alternate between rotating in both directions during a single treatment. In one preferred embodiment the apparatus may perform all of these motions and the setting is adjustable via a switch or other means built into the case of the device.

Where there are more than one massage nodules, they are preferably arranged in a curved relation to the radius of the disc so that when the disc turns in use, those massaging nodules closer to the periphery of the disc reach a point on the eyelid at the lash line prior to those nearer the centre of the disc. In a particularly preferred embodiment a

single nodule is present which is curved in relation to the radius of the disc such that, in use, points on the nodule closer to the periphery of the disc reach a point on the eyelid at the lash line prior to those nearer the centre of the disc.

In one particularly preferred embodiment the substantially circular disc is semi spherical with a radius greater than that of the radius of the subject eyeball and the one or more massaging nodule(s) extends from the surface of the semi sphere a distance around the difference between the radius of the semi sphere and the radius of the subject eyeball. In such an arrangement nodules closer to the centre of the disc are relatively smaller than those at the periphery.

The offset with respect to the axis of rotation of the electric motor is preferably from about 5 to about 20mm, corresponding roughly to the radius of the eyeball or orbital foramen. Where there is more than one nodule or where there is a single curved nodule, the maximum height of the nodule(s) occurs preferably between about 5 to about 20mm from the axis of rotation of the disc.

In preferred embodiments, the offset is from about 10 to about 12.5mm.

The deformable eyelid interface may be made of any material that is deformable enough to allow a force to be applied by the massager in use. The eyelid interface may be made from rubber, synthetic rubber, silicone rubber and like materials.

In preferred embodiments, the eyelid interface is of silicone rubber.

In preferred embodiments the deformable eyelid interface is made from a heat absorbent material. More preferably, the heat absorbent material is thermally conductive rubber or a closed container made from such a material and containing a liquid or gel.

In preferred embodiments the deformable eyelid interface has protrusions extending from the side distal to the eye in use (the inside), which engage the nodule(s) of the disc and are positioned relative to the scrubbing elements on the side proximal to the eye in use (the outside) such that they enhance the scrubbing action of the scrubbing elements. In particularly preferred embodiments the protrusions are sized and positioned beneath the scrubbing elements so that as the nodule(s) pass(es) beneath them the scrubbing elements move further in an angular fashion from their rest position than they would if the protrusions were not present.

The heater may be any device capable of applying heat to the deformable eyelid interface such as an electric resistive element or any similar device.

In preferred embodiments, the heater is an electric resistive heater.

In particularly preferred embodiments, the heater is an electric resistive heater with a positive temperature coefficient. This gives the additional advantage that a

thermostat is not required, thus reducing the cost of the apparatus. It may also be set at a predetermined temperature and is therefore much safer, preventing accidental over heating of the device and therefore the eye. It may be conceived that during the use of the device the settings can be altered. However, the above heating mechanism negates the requirements for elaborate adjustments and complicated control systems. This means that there is no need for a third party such as an ophthalmic professional to be present during the treatment.

In preferred embodiments the device also includes a power supply, which may supply alternating current (AC) or direct current (DC). The device apparatus according to the present invention may be powered by a rechargeable battery or may indeed be mains powered. Where the power supply is a battery, it may be disposable or rechargeable.

In yet another preferred embodiment, the device includes a time-dependent switch configured to switch off the power supply after a set period. In particularly preferred embodiments this set period is from 2 to 5 minutes, most preferably about 3 minutes.

The scrubbing element may be separate or integral with the eyelid interface and is positioned so as to displace debris from the base of the eyelashes in use. The scrubbing action may be provided by user movement, or by mechanical means, either in conjunction with the massager or by a separate mechanism.

The scrubbing element generally has a number of fingers or bristles that engage with the eyelashes in use to dislodge detritus clinging thereto.

In one particularly preferred embodiment the scrubbing element is integral with the eyelid interface and is in the form of a number of deformable 'fingers' extending from the eyelid interface. These 'fingers' are preferably sized so as to be long enough to engage the base of the eyelashes in use but not so long as to penetrate the eyelids potentially causing damage to the cornea. In use, in the preferred embodiment, the massaging nodule(s) move underneath the eyelid interface and thereby manipulate the 'fingers' to give the desired scrubbing action. As mentioned above, this action is preferably enhanced by positioning one or more protrusions on the opposite side of the eyelid interface from the 'fingers'.

In some preferred embodiments the fingers may be angled with respect to the plane of the disc so that, in use, sets of opposing fingers scrub in opposite directions against the eyelash base enhancing the scrubbing action.

In preferred embodiments, the eyelid interface and/or the scrubbing attachment may be disposable. This allows the device of the invention to be used repeatedly without the need for harsh sterilising chemicals or procedures. This disposability also allows the device to be used by multiple users without the danger of cross infection.

The apparatus according to the invention may preferably comprise a reservoir in fluid connection with the eyelid

interface for the storage and subsequent application to the eyelid of a fluid, liquid or lotion. These fluids may be lubricants or pharmacological preparations such as, for example, those containing anti-inflammatories, analgesics, anti-infectives and any other pharmaceutically active compounds which, when applied to the eyelid, may assist in the reduction of symptoms.

In one preferred embodiment the reservoir may be positioned at the edge of the eyelid interface, integral with same, and the disc may be adapted so that one or more lobes on the periphery thereof engage with the eyelid interface so as to express the contents of the reservoir onto the eyelid interface.

In a further embodiment the eyelid interface may comprise a plurality of microreservoirs to facilitate the application of lotion. These microreservoirs may take the form of very small indentations in the surface of the deformable eyelid interface which engages the eyelid in use.

The liquid or lotion in the reservoir of the apparatus according to the invention may be unmedicated and present simply to provide lubrication and/or hydration during use. If heating of the eyelid is being carefully monitored, any fluctuation due to frictional heating of the skin surface should be kept to a minimum. Preferably the device according to the invention is adapted so that the reservoir for the liquid contains 1 or more times the volume required to limit frictional heating of the eyelid in use.

In preferred embodiments, the lotion for application to the eyelid may contain one or more ingredients selected from topical anti-inflammatories, for example, sulfacetamide, topical steroids, antibiotics, surfactants, antihistamines, lipase inhibitors, antioxidants such as flavanoids and other plant derived antioxidants, and any other pharmaceutically active ingredients or any excipients. Surfactants for use in the reservoir liquid may be of a type similar to baby shampoo, that is, a surfactant which causes little or no irritation to the eye. Ideally, all of the ingredients for use in the reservoir liquid will have little or no irritation to the eye. The incorporation of ingredients giving mild irritation when applied to the eye may be co-applied with agents to mitigate such irritation.

In particularly preferred embodiments the lotion for application to the eyelid may contain derivatized celluloses such as hydroxypropylmethylcellulose (hypermellose) or other thickeners known in the art. The lotion may also contain preservatives and osmolytes. In preferred embodiments, the lotion contains sufficient osmolyte so that the lotion is substantially isotonic with the tear film or other bodily fluids.

In a second aspect, the present invention also provides a method for treating inflammation of eyelid glands in a patient and need thereof comprising using the apparatus according to the present invention.

In preferred embodiments, the method of the invention is carried out by treatment of the eyelid twice per day for two

weeks then to use a daily maintenance treatment on a permanent basis.

In preferred embodiments, the method of the invention is carried out from about 1 to about 5 minutes per eye per day. More preferably the method of the invention is carried out around 3 minutes a day.

Preferably the method is carried out using one or more of the preferred lotions or liquids which applied to the eyelid prior to, or during, treatment using the apparatus of the invention.

Brief description of the drawings

The invention is now described by way of example with respect to the accompanying drawings in which:

Figure 1 shows an exploded view of the device according to a preferred aspect of the invention;

Figure 2 shows an oblique view of a preferred apparatus according to the invention;

Figure 3 shows another oblique view of the device according to the invention;

Figure 4 shows a cross section through the device according to a preferred aspect of the present invention;

Figure 5 shows a cross section through the device according to a preferred aspect of the present invention similar to that of figure 4 wherein the section passes through a massaging nodule;

Figure 6 shows a cross section through the device according to a preferred aspect of the present invention showing a preferred arrangement of the heater;

Figure 7 shows a cross section through the deformable eyelid interface of the device according to the invention;

Figure 8 also shows a cross section through the deformable eyelid interface of the device according to the invention;

Figure 9 shows a close up of a partial cross section through the deformable eyelid interface of the device according to the invention;

Figure 10 shows a cross section through the circular disc of the device according to the invention showing a preferred massaging nodule profile;

Figure 11 shows a 'patient's eye view' elevation of the deformable eyelid interface of a device according to the invention; and

Figure 12 shows a cross section through part of the device according to the invention.

The present invention will now be described with respect to preferred embodiments depicted in the drawings. The description is by way of exemplification only and is not intended to limit the scope of the invention as claimed in the appended claims.

Description

Figure 1 shows an apparatus according to a preferred aspect of the present invention. The apparatus comprises a handle having a two part casing (1) with a grip portion, a panel for indicator lights (2) and having a switch incorporated

into the handle for turning the device on and/or off (3). The handle portion encloses a battery (4) which is connected to an electric motor (5) in the form of a direct current (DC) motor. The motor has an axle (6) representing the axis of rotation about which the massaging nodule (7) rotates in use. The massaging nodule is connected to the motor via a circular disc (8) which, in use, provides support to the portion of the deformable eyelid interface (9). The heater (not shown) resides within the eyelid interface and is comprised of a positive temperature coefficient resistive heater. The optional disposable eyelid interface cover (10) may be removed for sterilisation or replacement.

In some embodiments (not shown) the switch may automatically turn off after a predetermined time, for example 3 or 5 minutes. In some embodiments there may be other indicator instruments, for example to indicate remaining battery charge. The apparatus may also comprise an integral electronic controller unit if there are other electronic functions or indicators, for example if there was to be a set time delay between the start of the heating and the massaging action.

Figure 2 shows a view of the back of the apparatus according to a preferred aspect of the present invention having an access hole (11) adapted to receive a reservoir (12) containing a liquid preparation in the form of a lotion for application to the eyelid during use. The liquid preparation may be simply present as a lubricant or may be medicated. The medicated liquid may be in single use portions or the reservoir may contain enough of the preparation for many days or weeks of use.

Figure 3 shows a device according to a preferred aspect of the present invention mounted upon a base (13) which is, in turn, connected to mains electricity supply via a cable (14). In this embodiment the device according to the invention comprises a rechargeable battery and connections in the base portion allowing said battery to be recharged from the mains. A light (15) shows when recharging is completed.

Figure 4 shows an apparatus according to a particularly preferred embodiment of the invention having an integral scrubber (16) attached thereto. The scrubber comprises a number of deformable fingers (17) which, in use, touch the base of the eyelash and dislodge any detritus allowing for subsequent removal.

Figure 5 shows the apparatus according to a preferred embodiment similar to that shown in figure 4 except that the massaging nodule (7) is now in the plane of the sectional view shown. The massaging nodule presses upon the inside edge of the of the eyelid interface causing the deformable fingers (17) to move both radially (in the plane of the section) and perpendicular to the section shown in figure 5 so that they move against the base of the eyelash in use and dislodge any built up debris which has accumulated.

This embodiment is particularly advantageous as treatment involving scrubbing the lashes before, during or after heating the eyelid and massaging will prevent the symptoms associated with inflammation of the eye lash bases. As lash base inflammation and the modified sebaceous gland

inflammation often appear concurrently it is advantageous to treat both during the same treatment session. As already mentioned in this discussion, this results in a much lower chance of repeat infection of the modified sebum ducts.

The scrubbing component comes into contact with the base of the lashes of both the upper and lower eyelids. It may treat first the upper and lower lids independently or may treat both the upper and the lower lids at the same time. The part of the scrubbing component coming into contact with the lashes may be pre-treated with a pharmacologically active compound, preferably the compound in the lotion reservoir of the preferred apparatus.

The new arrangement shown in Figure 6, a thermal insulator (23) in the form of a plastic socket is positioned along the axle protruding from the electric motor. The heating element (20) in the form of a torus positioned about the shaft extending from the electric motor to the massaging nodule support with wires (24) extending therefrom toward the power source. An optionally thermally conductive metal insert (21) is positioned between the positive temperature coefficient heating element and the base of the massaging nodule disc to effect heat transfer from the element to the massaging nodule, and thereafter through the eyelid interface and onto the patients eyelid in use. In the particular embodiment shown in Figure 6, the casing (1) surrounding the internal components of the device according to the invention has two protrusions (22) in the form of lobes opposed diametrically so that a disposable eyelid interface, having holes or indentations therein positioned

so as to index with the protrusions (22) to aid in fitting and replacing the eyelid interface.

The thermal insulator prevents heat generated by the heating element from having an effect on the components on the distal side of said thermal insulator from the massaging head of the device according to the invention. This arrangement leads to longer battery and motor life as well as lessening thermal degradation of the casing (1).

The method of the invention involves using the apparatus according to the present invention. The apparatus can be used regularly, for example every day, or relatively irregularly, for example when symptoms begin to develop.

In one particularly preferred method of the invention the apparatus of the invention is used twice daily for two weeks after the initial symptoms develop and then once daily, each treatment episode lasting for a period of around 3 minutes per eye.

Daily treatment will ensure that the glands remain unblocked and will prevent the premature onset of damage by hyperkeratosis caused by aging and will prevent or at least delay the onset of dry eyes in a subject.

The treatment method takes into consideration that the therapeutic approach comprises 2 phases: an acute phase lasting 2 to 8 weeks, and a maintenance phase lasting indefinitely. During the acute phase, warm compress and expression of the glands needs to be performed twice a day.

Lid scrubbing can be performed numerous times during the day.

The preferred method of treating a subject involves using the preferred apparatus of the invention having a scrubber and an antiseptic liquid preparation in the reservoir. This method results in the treatment of both forms of the eyelid inflammation. It will also offer the least likelihood of recurrence of symptoms. Where this method is used and symptoms do recur, there is a narrower spectrum of symptoms and they tend to recur significantly later than they do with treatment using the apparatus without the scrubber. This combined treatment regimen also prevents the development of complications including Keratitis.

Treating posterior blepharitis without addressing the, perhaps undiagnosed, build-up of detritus at the base of the lashes often leads to recurrent posterior blepharitis but scrubbing of the eyelash bases alone does not treat posterior blepharitis. However, the device according to preferred embodiments of the invention outlined herein treats the two conditions in a synergistic way which results in significantly lower rates of relapse and/or longer blepharitis-free periods between relapses.

As seen in Figure 7, in one preferred embodiment the deformable eyelid interface (9) has protrusions (25) extending from the side distal to the eye in use (the inside of the device and the bottom as shown in the Figure), which when the interface is attached to the device of the invention (not shown) engage the nodule(s) of the disc beneath and are positioned relative to the scrubbing

elements (17) on the side proximal to the eye in use (the outside or the top as shown in the Figure) such that they enhance the scrubbing action of the scrubbing elements.

As shown, the protrusions are positioned directly beneath the scrubbing elements so that as the nodule(s) pass(es) beneath them the scrubbing elements move further in an angular fashion from their rest position than they would if the protrusions were not present. This allows the 'fingers' to cover more of an arc and to therefore do more 'work' when the device is used to dislodge any detritus from the base of the lashes. In the embodiment shown in Figure 7 the protrusions are in the form of ribs extending into the plane of the page whereas the scrubbing elements are in the form of small 'fingers' the fingers are positioned in rows corresponding to the ribs on the other side of the interface.

As shown in a number of the figures the scrubbing elements are preferably in the form of 'fingers' and are generally sized so as to be long enough to engage the base of the eyelashes in use but not so long as to penetrate the eyelids potentially causing damage to the cornea. As shown the size is in the order of a few millimetres, preferably around 2-4mm long and around 1mm-1.5mm in diameter where the fingers have a circular cross section. Of course, other arrangements regarding size and shape of the fingers are possible to achieve the advantages of the invention and such arrangements are intended to be included within the scope of the invention.

Figure 8 shows a particular arrangement of scrubbing elements in the form of fingers (17) on an interface for use with the device according to the invention. In the embodiment shown the fingers (17) are angled with respect to the plane of the disc (not shown) and with respect to each other and to the general plane of the interface so that, in use, sets of opposing fingers scrub in opposite directions against the eyelash base enhancing the scrubbing action. Such an arrangement of angled sets of fingers may also be used in accordance with a set of protrusions similar to those shown in Figure 7.

Figure 9 shows a magnified view of the eyelid interface (9) having a plurality of microreservoirs (26) to facilitate the application of lotion. These microreservoirs are shown in the form of very small pockets in the surface of the deformable eyelid interface which engages the eyelid in use. Where these microreservoirs are present all over the outer (eyelid engaging surface) of the interface, medicated or simply lubricating lotions can be applied to any part of the interface and the action of the nodule(s) passing beneath in use express the lotion out allowing it to flow across the face of the interface entirely covering the surface and ensuring complete coverage of the eyelid. This maximises the benefit of both therapeutic lotions and the lubricating effect of a lotion.

Figure 10 shows a plan view and a cross section of the disc of a device according to the invention. There is a single nodule (7) that extends from one point on the circumference of the disc (8) to the other side. The nodule has rotational symmetry and has a curved shape such that points

on the nodule closer to the periphery of the disc reach a point on the eyelid at the lash line prior to those nearer the centre of the disc. In the figure shown this would be achieved by rotating the disc shown in plan in a clockwise direction.

The edges of the nodule (27) closer to the periphery of the disc (28) are raised and the shape in cross section approximates that required to cup the eyeball.

As shown in Figure 11, the scrubbing members in the form of fingers (17) are positioned on the interface (9) at a position approximately one third of the way up from what would be the lower edge of the eyelid interface in use. This is a desired arrangement as it gives a greater engagement with the eyelashes leading to greater action of the 'fingers' (17) to remove detritus from the base of the lashes.

Figure 12 shows a particularly preferred device of the invention having reservoirs (29) formed within side walls of the deformable eyelid interface. Each reservoir has a pore (30) to allow fluid within the reservoir to be exuded out onto the surface of the eyelid interface. This is facilitated in the example shown by a lobe (31) attached to the axle (6) holding the disc which, in use, moves against the inside of the eyelid interface to express fluid from the reservoir. The exact arrangement of this system can be altered but will still give the advantage that the user can avoid having separate containers for medicated lotions. It is envisaged that the patient would purchase sealed sterile caps which would have the lotion already in the reservoirs,

fit them to the device of the invention, and then discard them after use. This avoids cross contamination between eyes and between patients.

The preferred embodiments of the apparatus and method of the invention may demonstrate a number of advantages over known devices and methods, such as:

- More rapid reduction of symptoms;
- The ability to treat two inflammatory conditions in one sitting leading to higher patient compliance due to ease of use;
- More effective cleaning of eyelid and lash bases;
- Less likelihood of over heating the eyelid;
- Less likelihood of mechanical damage to the eyelid and eye by applying the correct method of massaging to express the contents of the glands;
- Ensuring that the heat and the massaging are applied to the correct tissue preventing unnecessary heating of the skin of the face around the eyes;
- Simplifying the design and reducing the cost and complexity of the device leading to greater lifetime and easier repair should it be required.

Although the present invention has been described with respect to certain preferred embodiments this is intended in no way to limit the scope of the accompanying claims.

The device described herein is a single unit that simultaneously correctly and safely performs all 4 of the required functions, that is a) heating, b) massaging, c) scrubbing the lashes and d) applying lotion, to completely

manage this condition. There are no devices that combine the ability to carry out all 4 of these steps in a single unit to manage the whole disease in just one sitting.

Combining the 4 elements the device described herein has reduced the complexity and eliminates the risk that patients may forget a step. Reducing the time required for treatment improves the compliance. This will improve the survival and function of the bodies natural glands, and reduce the need for long-term use of eye drops to moisten the eye. Effective treatment in one sitting also reduces the relapse rate and protects the eye from the long-term complications of the disease.

Eliminating the need to mix cleaning agents reduces the risk of accidental chemical injury to the eye. Simultaneously adding in the pharmacological agent does not require a great deal of patient dexterity. The disposable cap eliminates the risk of contamination and the design of the scrubbing fingers to exactly meet the base of the eyelashes and not to damage the cornea.

Claims

1. An apparatus for melting and expressing material from blocked glands in a mammalian eyelid comprising a massager and a deformable eyelid interface having a heater and arranged so that, in use, a massaging nodule causes the eyelid interface to massage the eyelid wherein the apparatus additionally comprises a scrubbing element and further comprising a reservoir in fluid connection with the eyelid interface for the storage and subsequent application to the eyelid of fluid and or gel.

2. The apparatus according to claim 1 wherein the massager comprises one or more massaging nodules adapted so as to push through the deformable eyelid interface and exert a force on that portion of the eyelid that the massaging nodule is passing over.

3. The apparatus according to claim 1 or claim 2 wherein the massager comprises a substantially circular disc mounted to the axle of an electric motor.

4. The apparatus according to claim 3 wherein in use the one or more massaging nodules describe a circular path by being positioned in a manner offset with respect to the axis of rotation of the electric motor.

5. The apparatus of any preceding claim wherein the deformable eyelid interface is made from rubber, synthetic rubber, or silicone rubber.

6. The apparatus of claim 5, wherein the deformable eyelid interface is made of silicone rubber.

7. The apparatus of any preceding claim wherein the deformable eyelid interface is made from a heat absorbent material.

8. The apparatus of any preceding claim wherein the heater is an electric resistive element having a positive temperature coefficient.

9. The apparatus of any preceding claim, wherein the eyelid interface and/or the scrubbing element are detachable and disposable.

10. The apparatus of any preceding claim wherein the fluid or gel comprises one or more of, anti-inflammatories, analgesics, anti-infectives, anti-oxidants, natural plant extracts and any other pharmaceutically active compounds which when applied to the eyelid may assist in the reduction of symptoms.

11. The apparatus of any preceding claim, wherein the eyelid interface comprises one or more reservoirs and wherein the massaging nodule, in use, acts to express contents of the reservoir onto the eyelid interface.

12. The apparatus of any preceding claim, wherein the eyelid interface comprises a plurality of microreservoirs.

13. The apparatus of any preceding claim, wherein the scrubbing element is in the form of a plurality of fingers.

14. The apparatus of claim 13, wherein the eyelid interface comprises one or more protrusions extending from a side distal to the eye in use which engage the massaging nodule.

15. A method for treating inflammation of eyelid in a patient in need thereof comprising using the apparatus of any preceding claim.

16. The method of claim 15, wherein the apparatus is used twice a day for the first two weeks followed by a once daily treatment

17. The method of claim 15 or claim 16, wherein the inflammation is due to posterior and anterior blepharitis.

18. An eyelid interface for use with the apparatus of any one of claims 1 to 14.

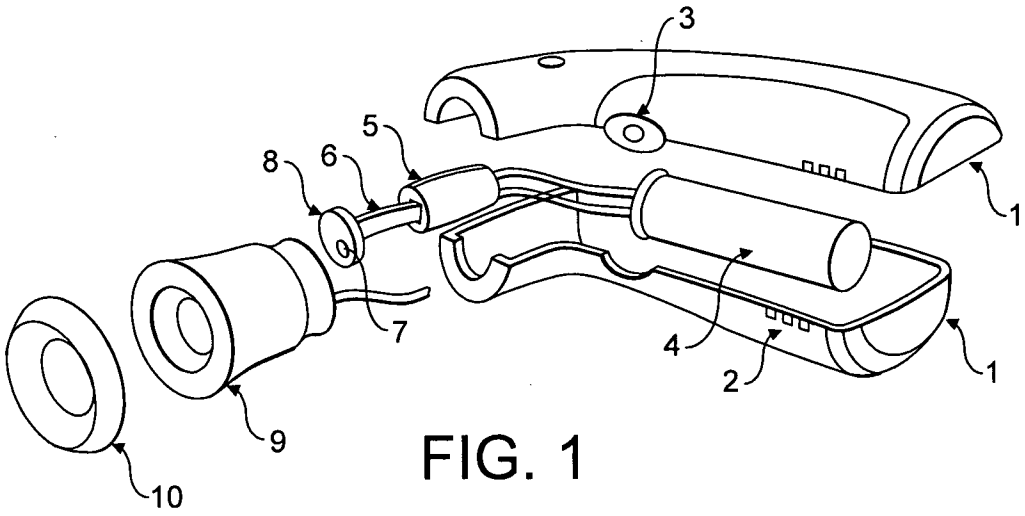

FIG. 1

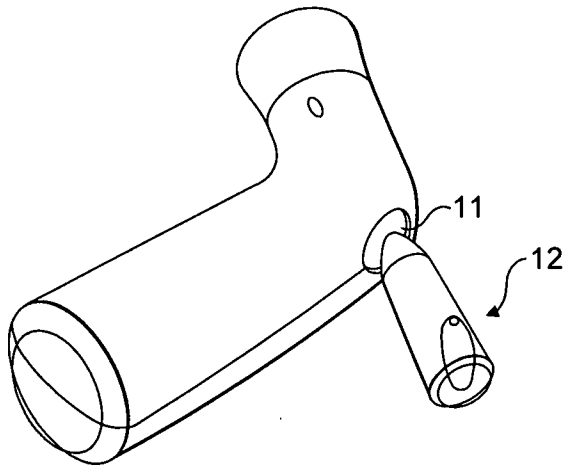

FIG. 2

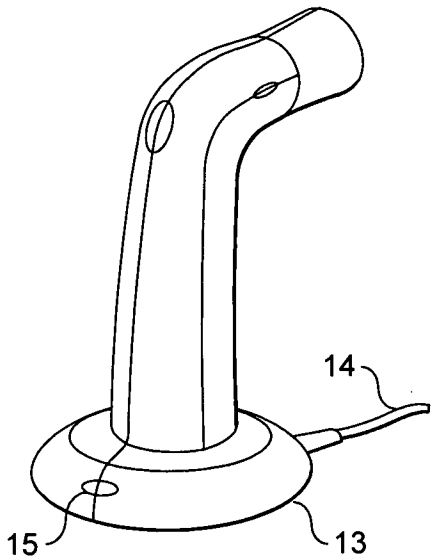

FIG. 3

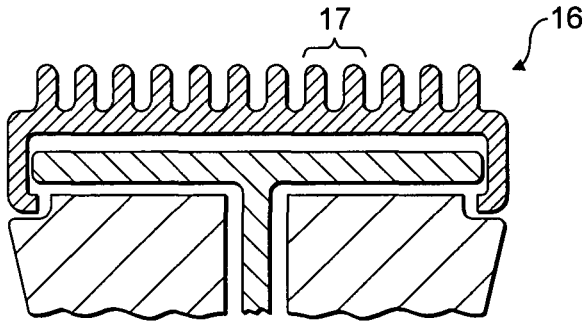

FIG. 4

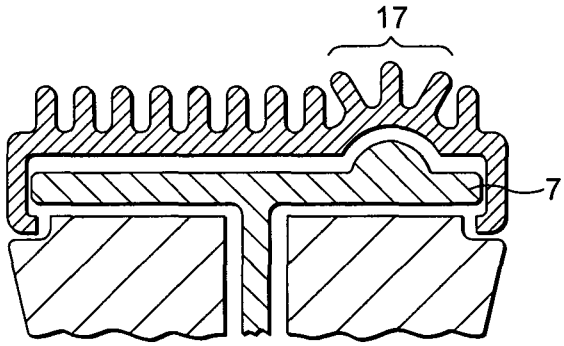

FIG. 5

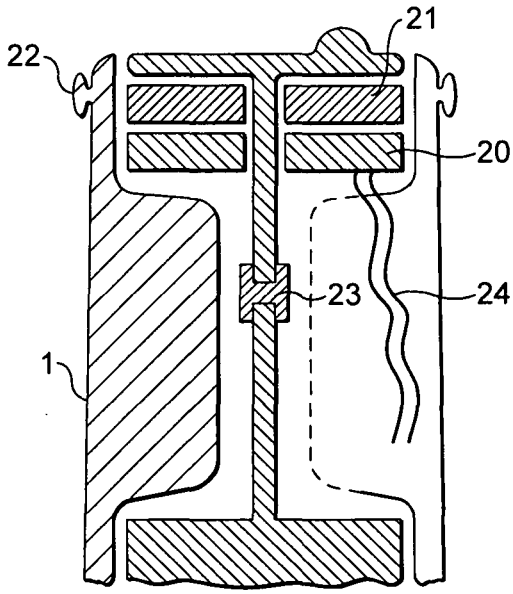

FIG. 6

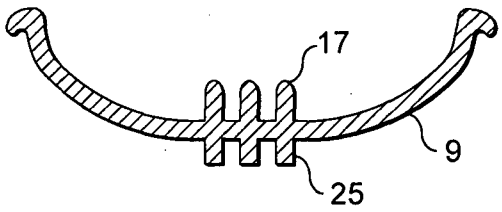

FIG. 7

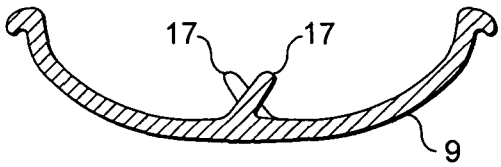

FIG. 8

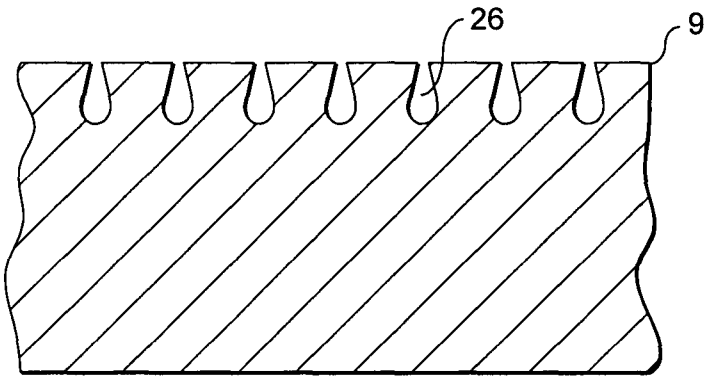

FIG. 9

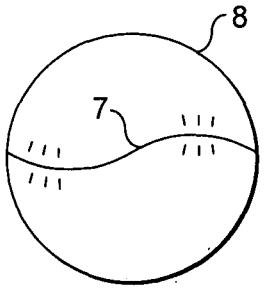

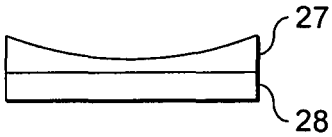

FIG. 10

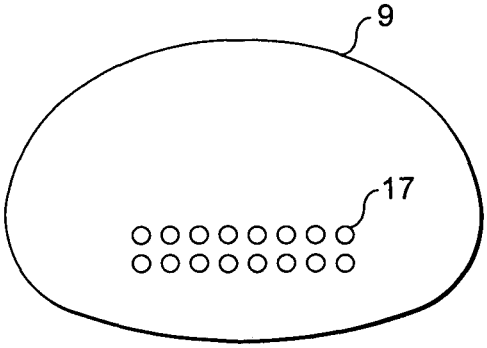

FIG. 11

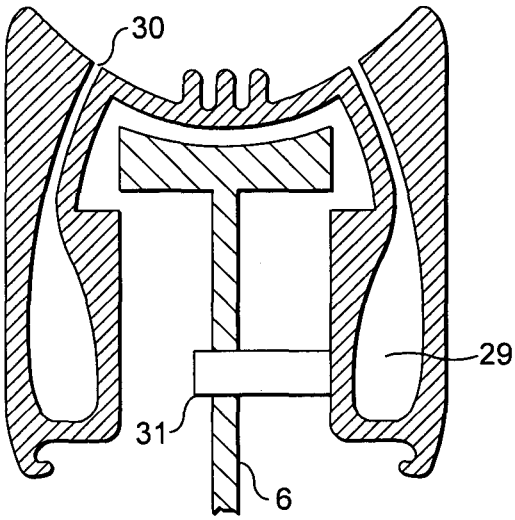

FIG. 12

INTERNATIONAL SEARCH REPORT

International application No
PCT/GB2008/003900

A. CLASSIFICATION OF SUBJECT MATTER
INV. A61H23/02 A61H7/00

According to International Patent Classification (IPC) or to both national classification and IPC

B. FIELDS SEARCHED

Minimum documentation searched (classification system followed by classification symbols)
A61H

Documentation searched other than minimum documentation to the extent that such documents are included in the fields searched

Electronic data base consulted during the international search (name of data base and, where practical, search terms used)

EPO-Internal, WPI Data

C. DOCUMENTS CONSIDERED TO BE RELEVANT

Category*	Citation of document, with indication, where appropriate, of the relevant passages	Relevant to claim No.
X	US 2007/016254 A1 (GRENON STEPHEN M [US] ET AL) 18 January 2007 (2007-01-18) paragraphs [0058] - [0061]; claims; figures 5-10c	1,5-12, 18
X	JP 2002 253631 A (NOZAWA HIROMICHI; MIKI YASUO) 10 September 2002 (2002-09-10)	18
A	abstract; figures	1
A	US 2003/056281 A1 (HASEGAWA TOKUICHIRO [JP]) 27 March 2003 (2003-03-27) claims; figures	1
A	DE 20 2005 011496 U1 (P & P GROUP GMBH [DE]) 13 July 2006 (2006-07-13) figures	1

☐ Further documents are listed in the continuation of Box C.

☒ See patent family annex.

* Special categories of cited documents :

"A" document defining the general state of the art which is not considered to be of particular relevance

"E" earlier document but published on or after the international filing date

"L" document which may throw doubts on priority claim(s) or which is cited to establish the publication date of another citation or other special reason (as specified)

"O" document referring to an oral disclosure, use, exhibition or other means

"P" document published prior to the international filing date but later than the priority date claimed

"T" later document published after the international filing date or priority date and not in conflict with the application but cited to understand the principle or theory underlying the invention

"X" document of particular relevance; the claimed invention cannot be considered novel or cannot be considered to involve an inventive step when the document is taken alone

"Y" document of particular relevance; the claimed invention cannot be considered to involve an inventive step when the document is combined with one or more other such documents, such combination being obvious to a person skilled in the art.

"&" document member of the same patent family

Date of the actual completion of the international search	Date of mailing of the international search report
26 January 2009	04/02/2009

Name and mailing address of the ISA/	Authorized officer
European Patent Office, P.B. 5818 Patentlaan 2 NL - 2280 HV Rijswijk Tel. (+31-70) 340-2040, Fax: (+31-70) 340-3016	Knoflacher, Nikolaus

INTERNATIONAL SEARCH REPORT

International application No.
PCT/GB2008/003900

Box No. II Observations where certain claims were found unsearchable (Continuation of item 2 of first sheet)

This international search report has not been established in respect of certain claims under Article 17(2)(a) for the following reasons:

1. [X] Claims Nos.: 15-17
because they relate to subject matter not required to be searched by this Authority, namely:

Claims 15-17 relate to method for treatment of the human or animal body by therapy (Rule 39.1(iv) PCT)

2. [ ] Claims Nos.:
because they relate to parts of the international application that do not comply with the prescribed requirements to such an extent that no meaningful international search can be carried out, specifically:

3. [ ] Claims Nos.:
because they are dependent claims and are not drafted in accordance with the second and third sentences of Rule 6.4(a).

Box No. III Observations where unity of invention is lacking (Continuation of item 3 of first sheet)

This International Searching Authority found multiple inventions in this international application, as follows:

1. [ ] As all required additional search fees were timely paid by the applicant, this international search report covers allsearchable claims.

2. [ ] As all searchable claims could be searched without effort justifying an additional fees, this Authority did not invite payment of additional fees.

3. [ ] As only some of the required additional search fees were timely paid by the applicant, this international search reportcovers only those claims for which fees were paid, specifically claims Nos.:

4. [ ] No required additional search fees were timely paid by the applicant. Consequently, this international search report is restricted to the invention first mentioned in the claims; it is covered by claims Nos.:

Remark on Protest

[ ] The additional search fees were accompanied by the applicant's protest and, where applicable, the payment of a protest fee.

[ ] The additional search fees were accompanied by the applicant's protest but the applicable protest fee was not paid within the time limit specified in the invitation.

[ ] No protest accompanied the payment of additional search fees.

INTERNATIONAL SEARCH REPORT

Information on patent family members

International application No
PCT/GB2008/003900

Patent document cited in search report	Publication date	Patent family member(s)	Publication date
US 2007016254 A1	18-01-2007	US 2007016255 A1	18-01-2007
		US 2007016256 A1	18-01-2007
		US 2007049913 A1	01-03-2007
		US 2007060988 A1	15-03-2007
		US 2008109052 A1	08-05-2008
		US 2008109053 A1	08-05-2008
JP 2002253631 A	10-09-2002	NONE	
US 2003056281 A1	27-03-2003	CA 2381876 A1	26-03-2003
		CN 1408328 A	09-04-2003
		JP 3667268 B2	06-07-2005
		JP 2003093431 A	02-04-2003
DE 202005011496 U1	13-07-2006	NONE	