US 20070016254A1

(19) United States

(12) Patent Application Publication

(10) Pub. No.: US 2007/0016254 A1

(43) Pub. Date: Jan. 18, 2007

Grenon et al.

(54) **METHOD AND APPARATUS FOR TREATING GLAND DYSFUNCTION EMPLOYING HEATED MEDIUM**

(76) Inventors: **Stephen M. Grenon**, Hillsborough, NC (US); **Donald R. Korb**, Boston, MA (US); **Timothy R. Willis**, Raleigh, NC (US); **Benjamin T. Gravely**, Raleigh, NC (US)

Correspondence Address:
Robert G. Rosenthal
Suite 200
5856 Faringdon Place
Raleigh, NC 27609 (US)

(21) Appl. No.: **11/434,033**

(22) Filed: **May 15, 2006**

Related U.S. Application Data

(60) Provisional application No. 60/700,233, filed on Jul. 18, 2005.

Publication Classification

(51) **Int. Cl.**
A61N 1/39 (2006.01)

(52) **U.S. Cl.** **607/1**

(57) **ABSTRACT**

A method and apparatus for treating gland dysfunction caused by gland obstruction in order to restore the natural flow of secretion from the gland comprises the application of a combination of energy, suction, vibration, heat, aspiration, chemical agents and pharmacological agents to loosen and thereafter remove the obstructive material.

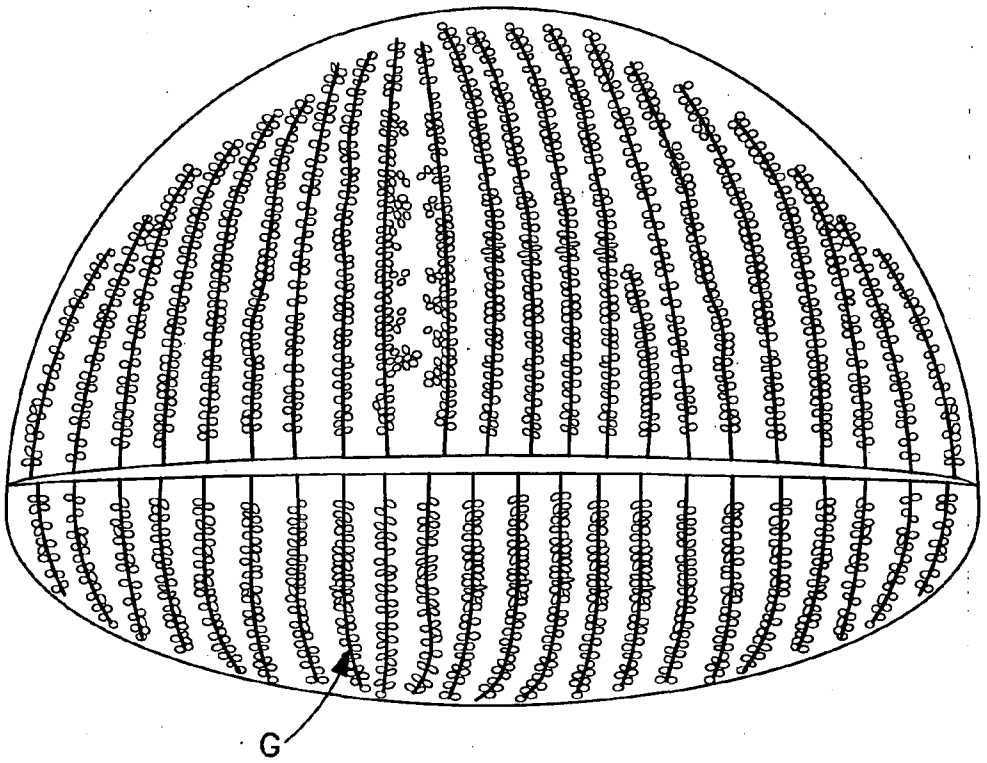

FIG. 1

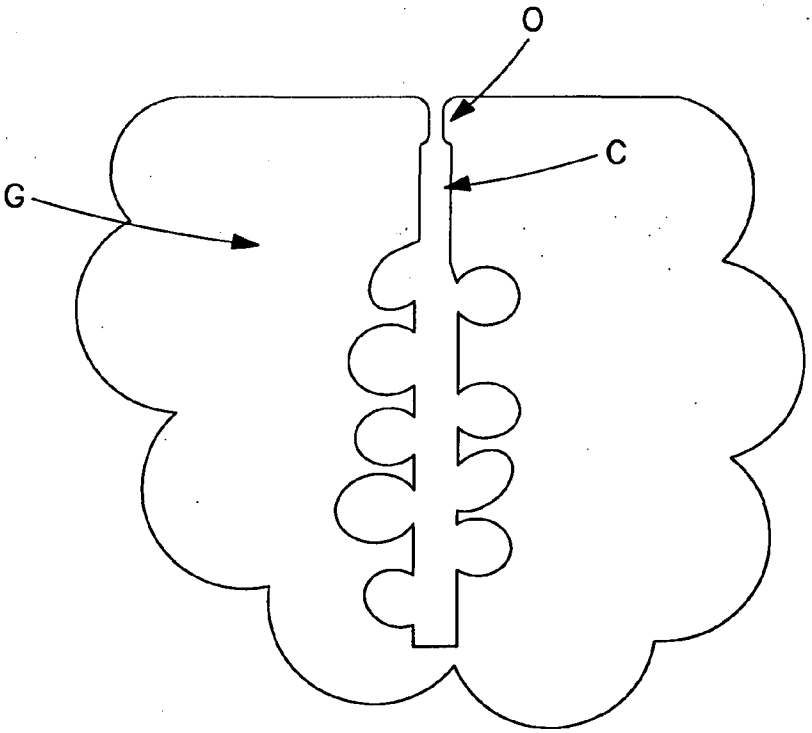

FIG. 2

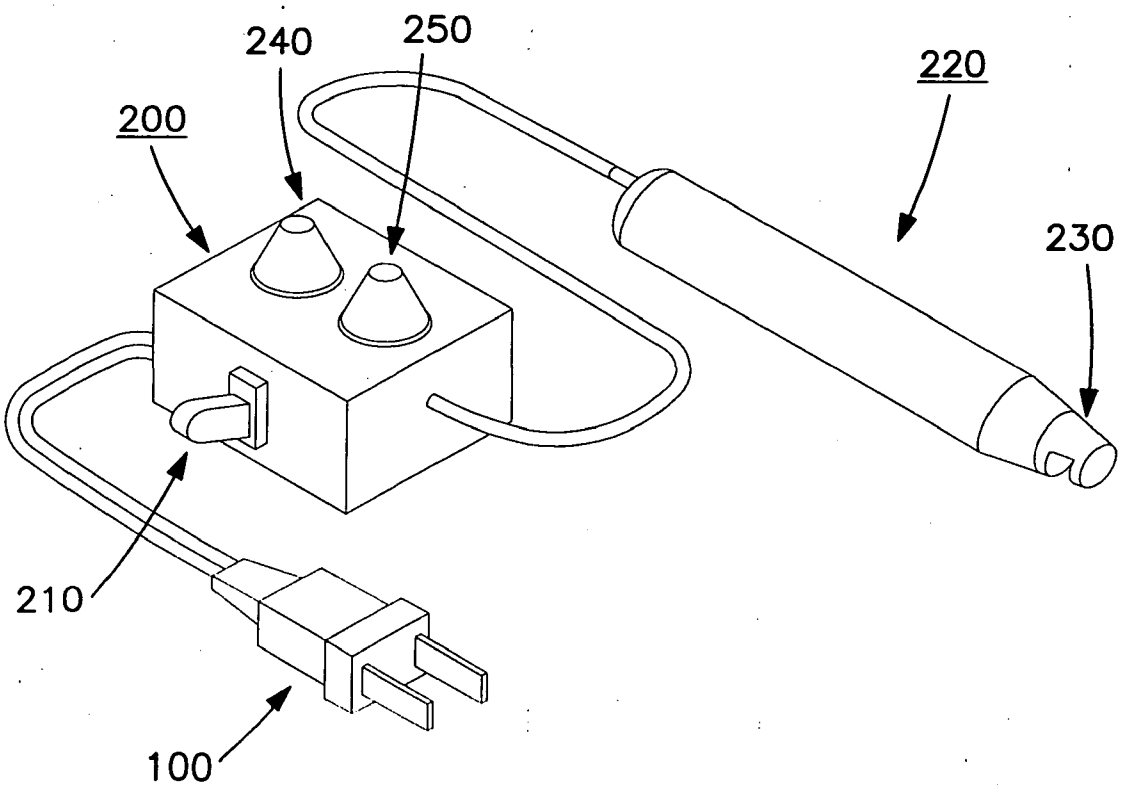

FIG. 3A

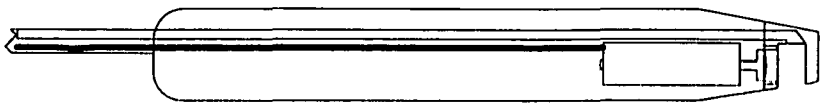

FIG. 3B

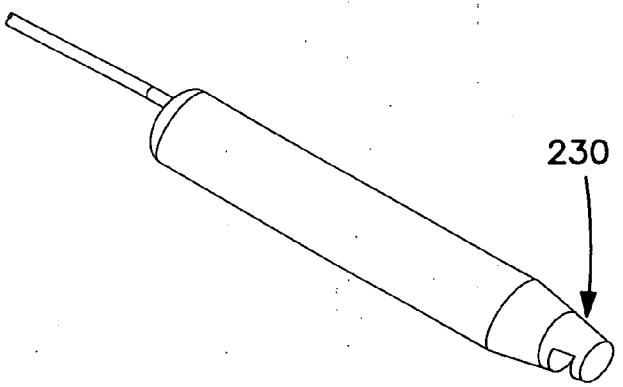

FIG. 4A

FIG. 4B

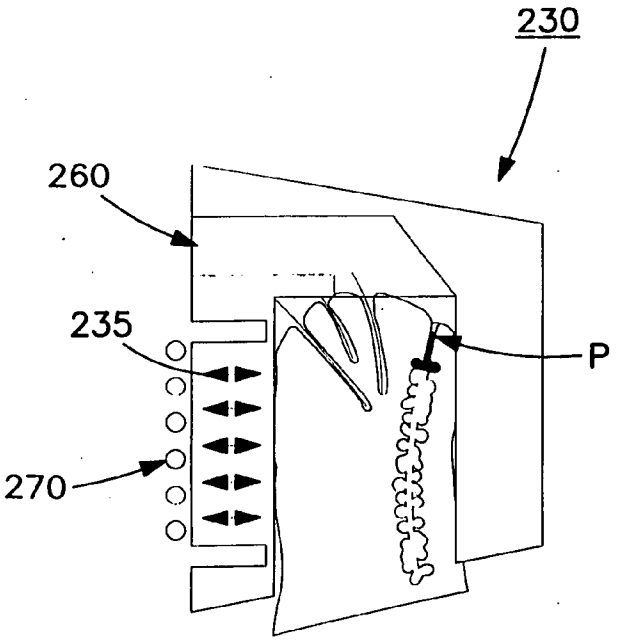

FIG. 4C

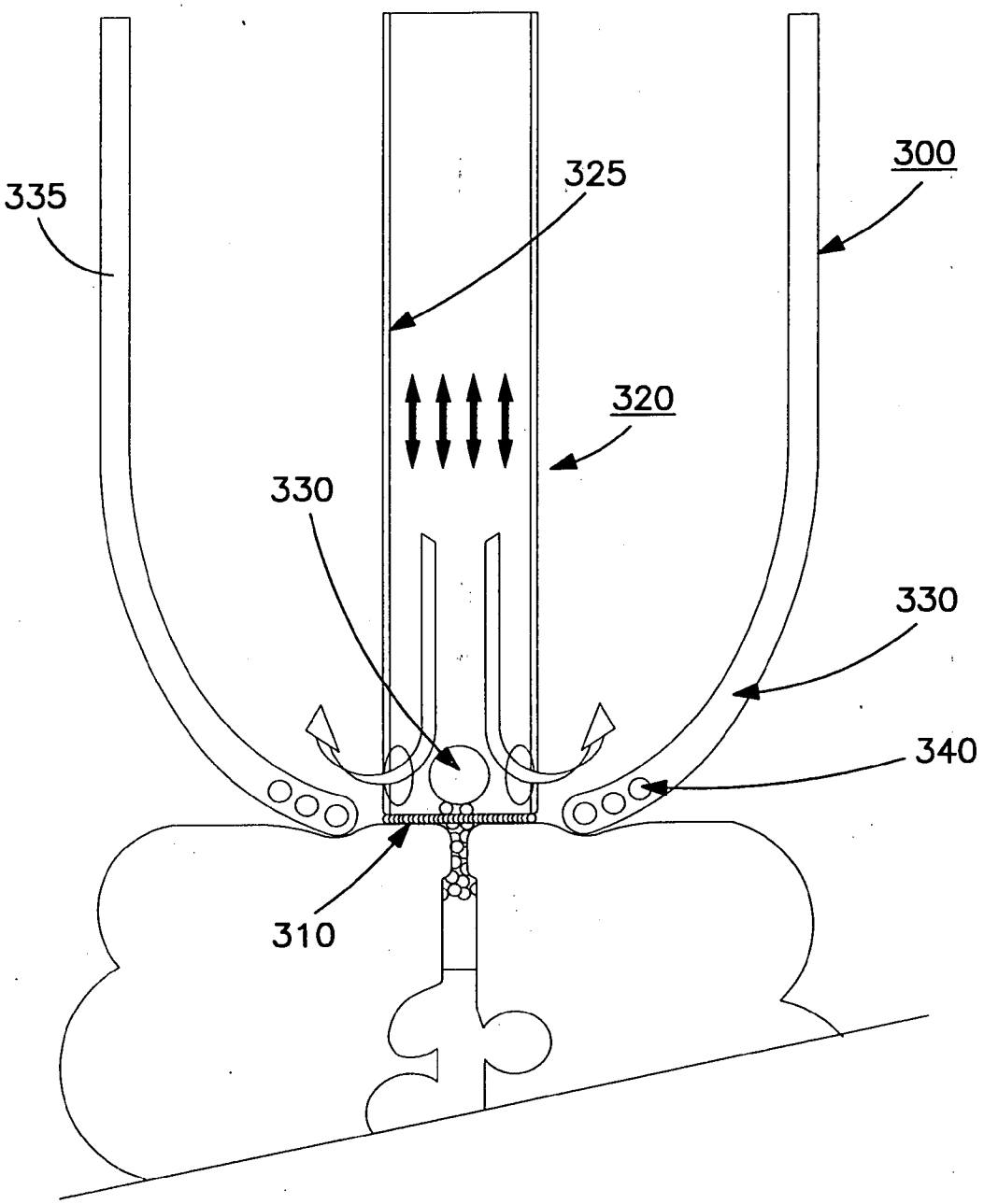

FIG. 5

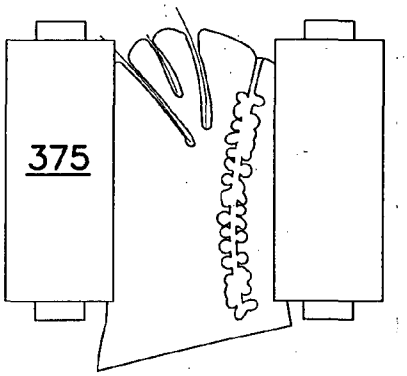

FIG. 6A

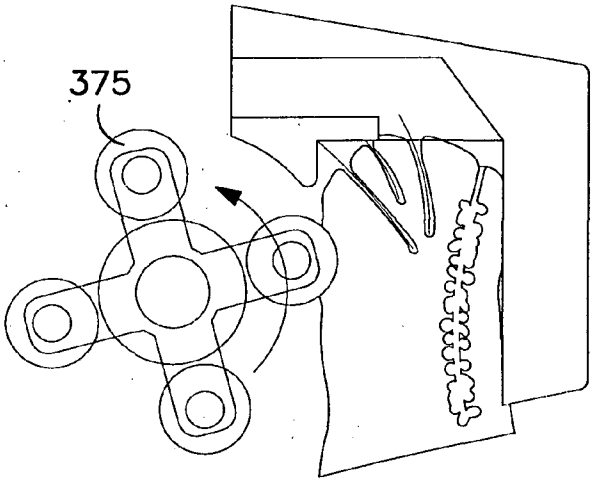

FIG. 6B

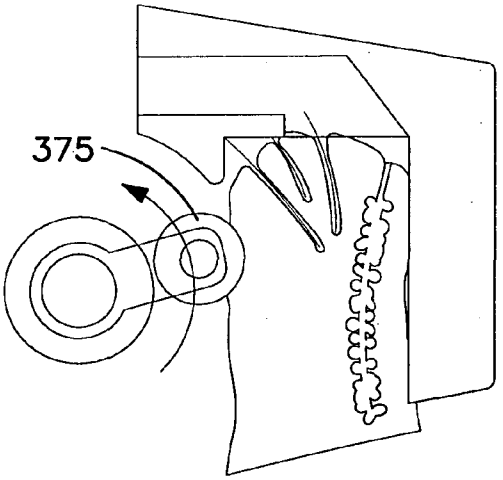

FIG. 7

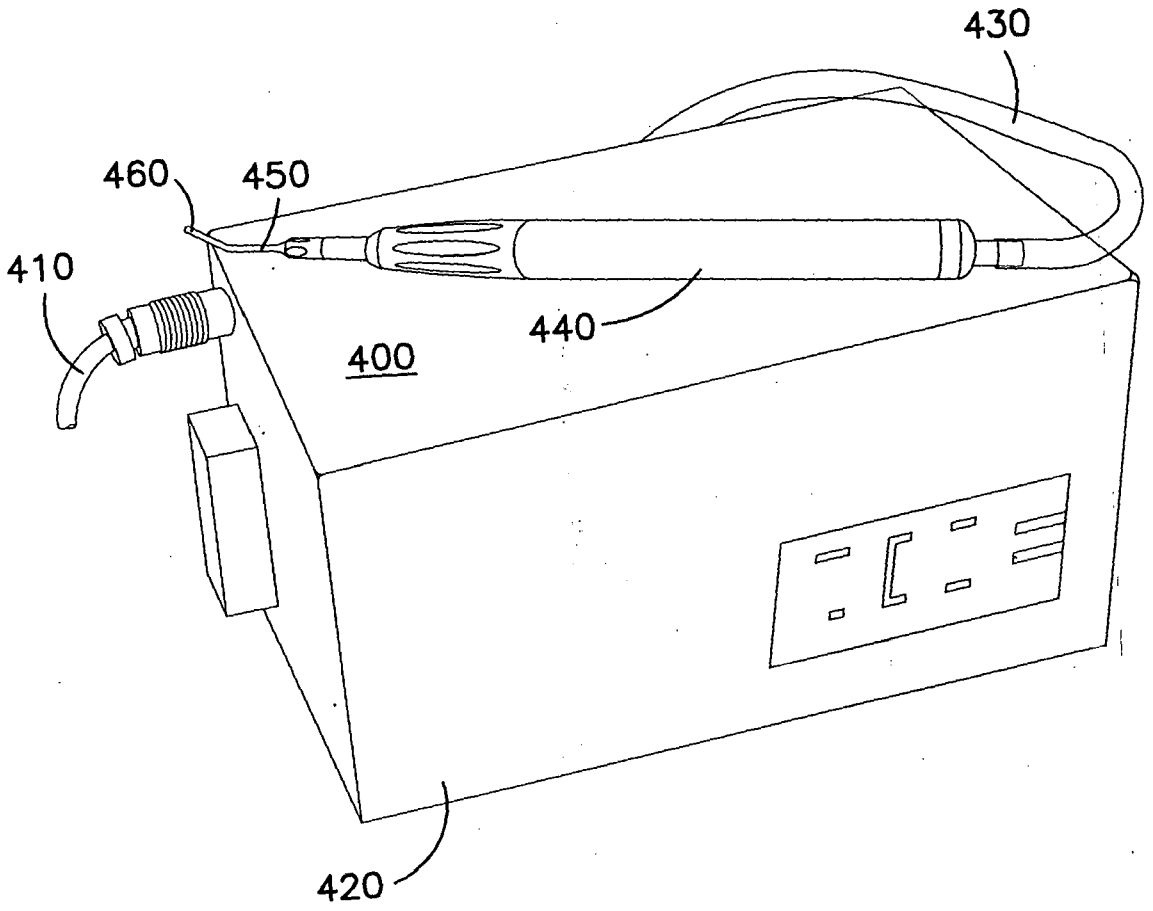

FIG. 8

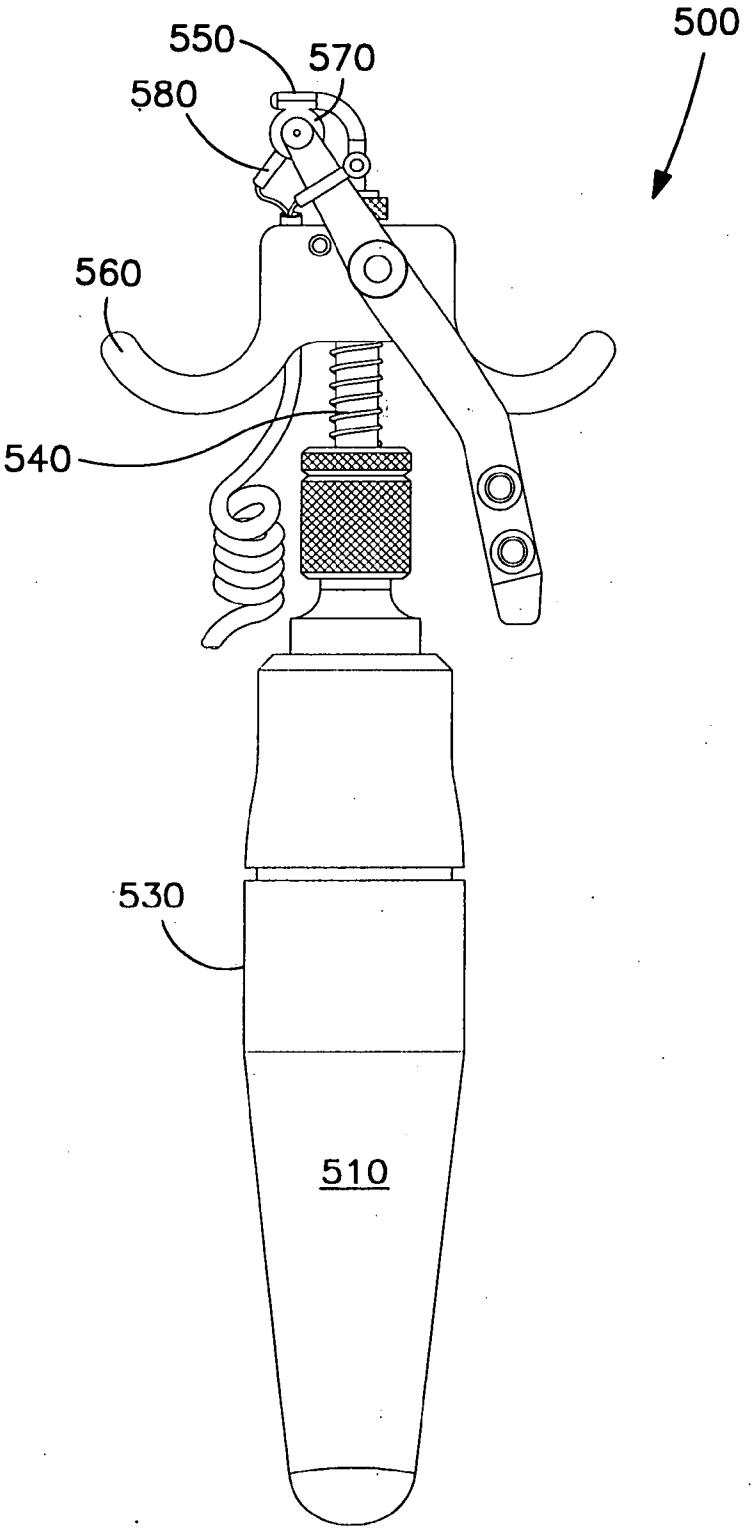

FIG. 9

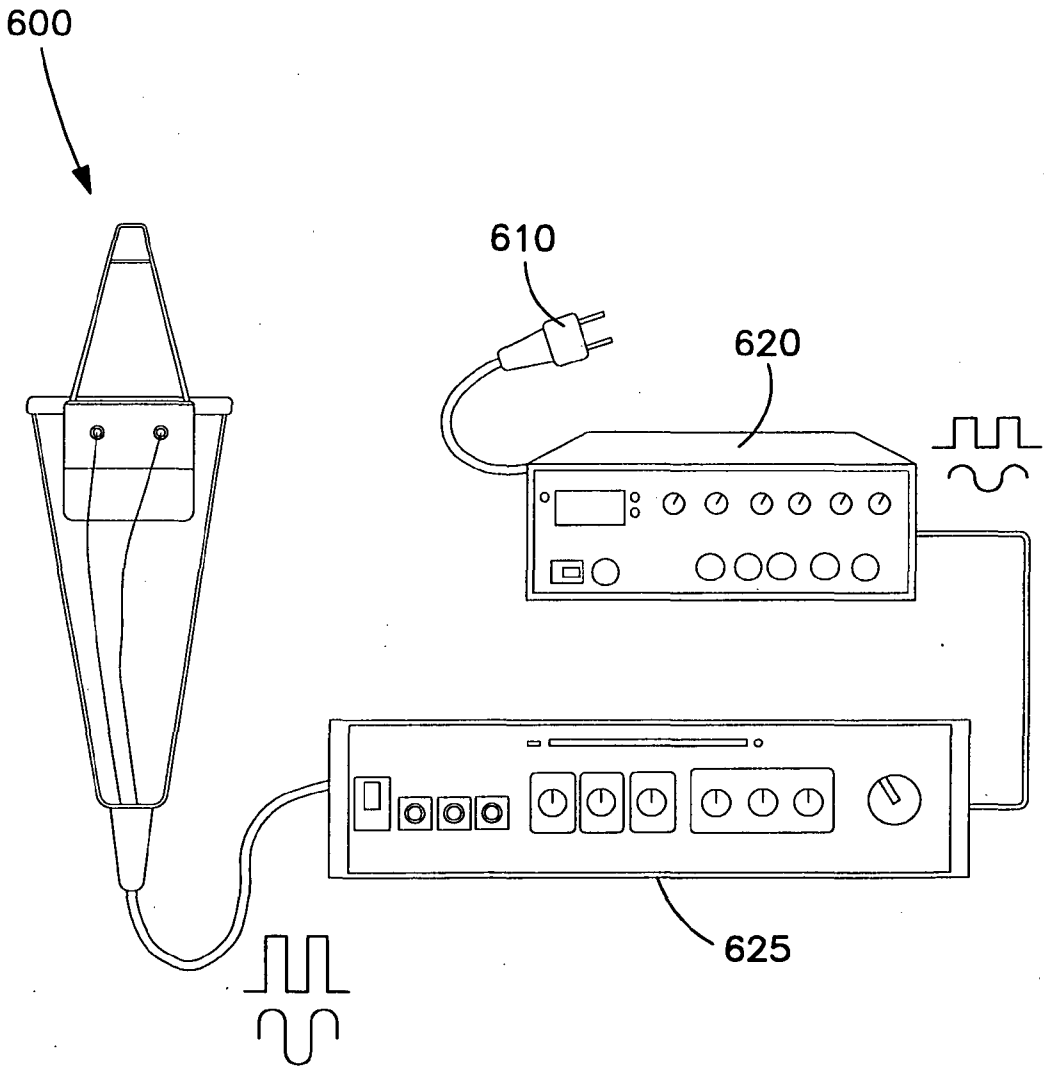

FIG. 10A

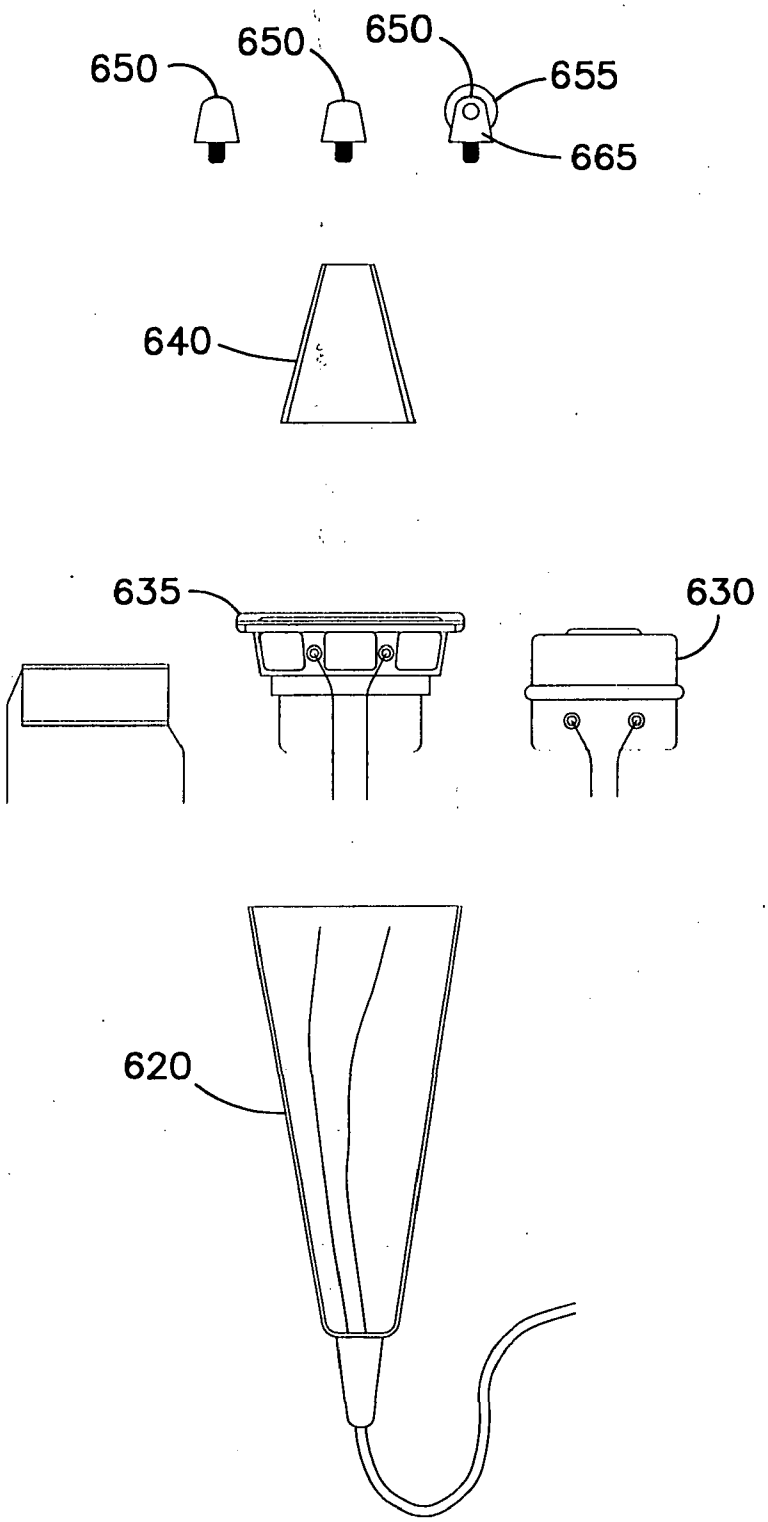

FIG. 10B

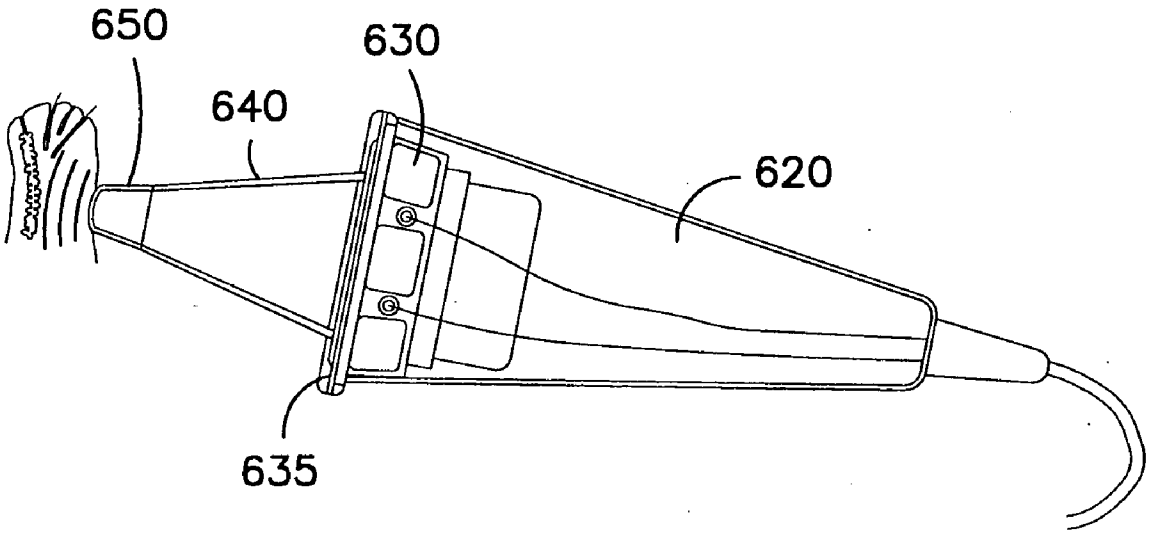

FIG. 10C

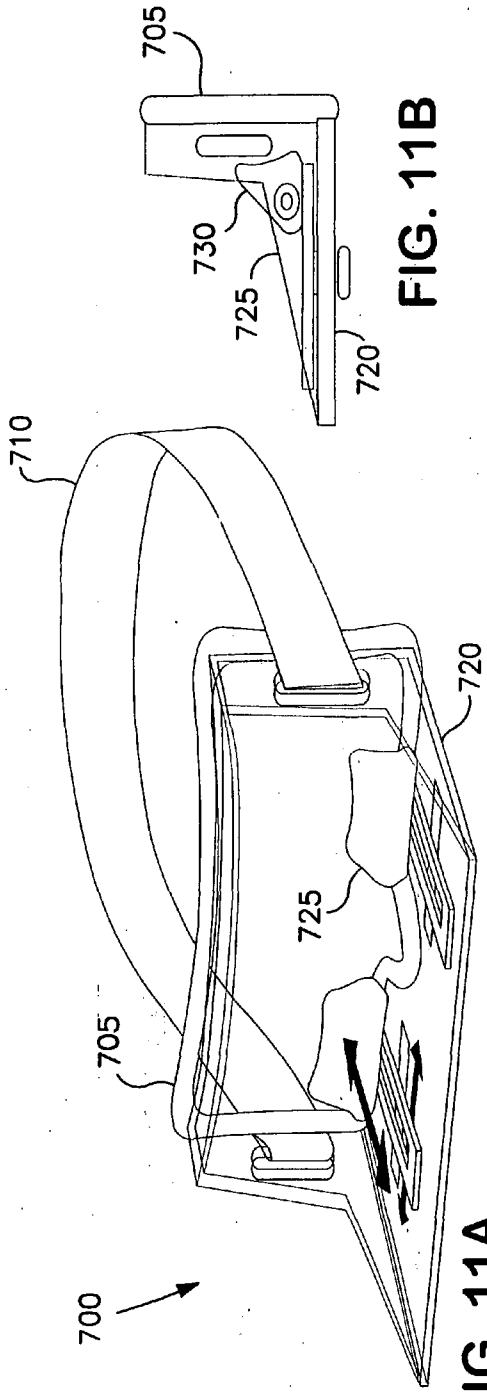

FIG. 11A

FIG. 11B

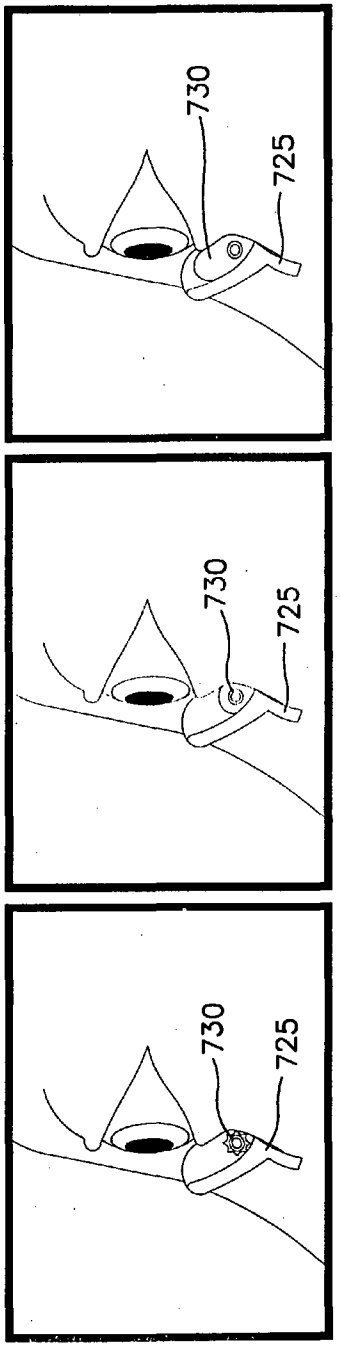

FIG. 11C

FIG. 11D

FIG. 11E

METHOD AND APPARATUS FOR TREATING GLAND DYSFUNCTION EMPLOYING HEATED MEDIUM

PRIORITY CLAIM

[0001] This invention claims priority from U.S. Provisional Patent Application Ser. No. 60/700,233 filed Jul. 18, 2005, which is incorporated herein by reference in its entirety and is hereby made a part of this specification.

FIELD OF THE INVENTION

[0002] This invention relates generally to the field of treatment of glands in order to restore natural secretory function to obstructed glands within the body and specifically, the meibomian glands of the eye.

BACKGROUND OF THE INVENTION

[0003] The human body contains a number of glands including the lacrimal and meibomian glands of the eye, the sebaceous or pilo-sebaceous hair glands on the face and underarms, and the mammary glands in the breasts. These glands may malfunction due to age, irritation, environmental conditions, cellular debris, inflammation, hormonal imbalance and other causes. One common malfunction is the restriction or stoppage of the natural flow of secretions out of the gland. The present invention provides methods and modalities to enhance and/or restore the natural flow of secretions out of the glands.

[0004] While the description that follows is directed to the meibomian glands of the eye, it will be understood that the present invention may be employed to treat all of the external glands of the body. With particular reference to the human eye, the tear film covering the ocular surfaces is composed of three layers. The innermost layer in contact with the ocular surface is the mucus layer. The middle layer comprising the bulk of the tear film is the aqueous layer, and the outermost layer is a thin (less than 250 nm) layer comprised of many lipids known as "meibum" or "sebum". The sebum is secreted by the meibomian glands, enlarged specialized sebaceous-type glands (hence, the use of "sebum" to describe the secretion) located on both the upper and lower eye lids, with orifices designed to discharge the lipid secretions onto the lid margins, thus forming the lipid layer of the tear film. The typical upper lid has approximately 25 meibomian glands and the lower lid has approximately 20 meibomian glands, which are somewhat larger than those located in the upper lid. The meibomian gland comprises various sac-like acini which discharge the secretion into the duct of the gland. The secretion then passes into the orifices which are surrounded by smooth muscle tissue and the muscle of Riolan which are presumed to aid in the expression of sebum. The meibomian gland orifices open on the lid margin usually along the mucocutaneous junction also known as the gray line. The meibomian gland orifices are assumed to open with blinking and release minute amounts of sebum secretions onto the lid margin and then into the inferior tear meniscus. The lipid "sebum" in the tear meniscus is spread upward and over the tear film of the open eye by the upward blink action. If the lipid secretions are optimal, and adequate lipid layer is maintained at the air interface to minimize evaporation and prevent dry eye states. If the lipid secretions are inadequate the lipid layer is not adequate to minimize evaporation with resulting rapid evaporation leading to dry eye states. Thus, it will be seen that a defective lipid layer or an incorrect quantity or quality of such lipids can result in accelerated evaporation of the aqueous layer which, in turn, causes symptoms which may include symptoms such as dryness, scratching, irritation, burning, tearing, redness, and itchiness, which are collectively be referred to as "dry eye" symptoms.

[0005] Dry eye states have many etiologies. A common cause of common dry eye states is the condition known as "meibomian gland dysfunction", a disorder where the glands are obstructed or occluded. As employed herein the terms "occluded" and "obstruction" as they relate to meibomian gland dysfunction are defined as partially or completely blocked or plugged meibomian glands. If completely obstructed the gland cannot secrete. If partially or intermittently occluded the gland may secrete either normal or decreased amounts of sebum. More usually the secretions are altered having semi-solid, thickened, congested secretions, frequently described as inspissated. The secretions may be clear or yellowish, the latter indicating possible infection. meibomitis, an inflammation of the meibomian glands leading to their dysfunction, is usually accompanied by blepharitis (inflammation of the lids). Meibomian gland dysfunction may accompany meibomitis, or meibomian gland dysfunction may be present without obvious lid inflammation. Meibomian gland dysfunction is frequently the result of keratotic obstruction of the individual meibomian gland orifices and/or the central duct (canal) of the gland which compromises the secretory functions of the individual meibomian glands. More particularly, these keratotic obstructions include a combination of desquamated epitlelial cells, keratin, sebaceous ground substance, and bacteria, see, Korb et al., Meibomian Gland Dysfunction and Contact Lens Intolerance, Journal of the Optometric Association, Vol. 51, Number 3, (1980), pp. 243-251. While meibomitis is obvious by inspection of the external lids, meibomian gland dysfunction may not be obvious even when examined with the magnification of the slit-lamp biomicroscope, since there may not be external signs or the external signs may be so minimal that they are overlooked. The external signs of meibomian gland dysfunction may be limited to subtle alterations of the meibomian gland orifices, subtle or pronounced overgrowth of epithelium over the orifices, and pouting of the orifices of the glands with congealed material acting as the obstructive material under the epithelia overgrowth resulting in the pouting of the orifices.

[0006] Hormonal changes include those which occur during menopause, and particularly changing estrogen levels, can result in thickening of the oils secreted by the meibomian glands which results in clogged gland orifices. Further, decreased estrogen levels may also enhance conditions under which staphylococcal bacteria can proliferate. This can cause migration of the bacteria into the glands, thus resulting in a decreased secretion rate.

[0007] When the flow of secretions from the meibomian gland is restricted due to the existence of an obstruction, epithelial cells on the eyelid margin tend to grow over the gland orifice thus further restricting sebum flow and exacerbating the dry eye condition.

[0008] Additional factors which may cause or exacerbate meibomian gland dysfunction include, age, contact lens

wear and hygiene, disorders of blinking, extended computer use, cosmetic use, or other illness, particularly diabetes.

[0009] Clinical evaluation of the meibomian glands requires the application of pressure to the external surface of the eyelids over the meibomian glands in order to determine whether secretion is obtained from the individual gland with gentle pressure. If gentle pressure does not provide secretion, forceful expression may be utilized to determine if secretion can be obtained. Thus, the state of an individual meibomian gland can vary from optimal, where clear meibomian sebum is expressed with gentle pressure; to mild or moderate meibomian gland dysfunction where milky fluid or inspissated or creamy secretion may be obtained; to total blockage where no secretion of any sort can be obtained even with the application of extreme pressure (see Korb, et al., "Increase in Tear Film Lipid Layer Thickness Following Treatment of Meibomian Gland Dysfunction", Lacrimal Gland, tear Film, ad Dry Eye Syndromes, pp. 293-298, Edited by D. A. Sullivan, Plenum Press, New York (1994)). Significant chemical changes of the meibomian gland secretions occur with meibomian gland dysfunction and consequently, the composition of the naturally occurring tear film is altered, which in turn, contributes to ocular disease which is generally known as "dye eye".

[0010] While the tear film operates as a singular entity and all of the layers thereof are important, the lipid layer, which is secreted from the meibomian glands is of particular significance as it functions to slow the evaporation of the underlying layers and to lubricate the eyelid during blinking which prevents dry eye.

[0011] In response to the foregoing, various treatment modalities have been developed in order to treat the dry eye condition, including drops which are intended to replicate and replace the natural tear film, pharmaceuticals which are intended to stimulate the gland and cells providing the components of the tear film and various warm compresses and warming devices which are designed to treat meibomitis and the meibomian glands.

[0012] Eye drops such as Refresh®, Soothe® and Systane® are designed to closely replicate the naturally occurring healthy tear film. However, their use and administration is merely a treatment of symptoms and not of the underlying cause. Further, the use of drops is generally for an indefinite length of time and consequently, extended use can become burdensome and costly. Pharmaceutical modalities such as the use of tetracycline have also been suggested to treat meibomian gland dysfunction and one such treatment is disclosed in United States Patent Publication no. US2003/011426 titled "Method for Treating Meibomian Gland Disease", U.S. Pat. No. 6,455,583 titled "Method for Treating Meibomian Gland Disease" to Pflugfelder et al. and PCT Publication No. WO 99/58131 titled "Use of Tetracyclines for Treating Meibomian Gland Disease". However, this treatment has not proven to be clinically effective for meibomian gland obstruction, and it may be unnecessary as much meibomian gland dysfunction is the result of an obstruction of the gland without infection. The use of corticosteroids have also been proposed to treat meibomian gland dysfunction as disclosed in U.S. Pat. No. 6,153,607 titled "Non-preserved Topical Corticosteroid for Treatment of Dry Eye, filamentary Keratitis, and Delayed Tear Clearance (or Turnover) to Pflugfelder et al. Again, this proposed treatment appears to treat the symptom of dry eye, as opposed to treatment of the underlying cause and further presents the risks of inducing cataracts and glaucoma. Additionally, the use of topically applied androgens or androgen analogues have also been used to treat acute dry eye signs and symptoms in Keratoconjuctivitis Sicca as disclosed in U.S. Pat. No. 5,958,912 and U.S. Pat. No. 6,107,289 both titled "Ocular Therapy in Keratoconjunctivitis Sicca Using Topically Applied Androgens of TGF-β" and both issued to Sullivan.

[0013] Another modality for the treatment of meibomian gland dysfunction is disclosed in European Patent Application serial no. PCT/GB2003/004782 titled "Eyelid Margin Wipes Comprising Chemical Means for Temperature Adjustment". As disclosed in this patent application, an eyelid margin wipe is provided wherein prior to use, a chemical agent is activated that will heat the wipe to about 32° C. to about 55° C. and wherein the temperature will be maintained for at least ten minutes to treat the eyelid margin. This method is not without its drawbacks in that lid irritation can be exacerbated by non-specific heating and the heating range noted as comfortable at over 50° C. would burn the skin. Another method of heating the eyelids and meibomian glands uses near infrared radiation. More specifically, two hard eye patches were attached to an eye mask according to the pupillary distance of the subject. The eye mask was held in place by an elastic headband. Each patch employed **19** light emitting diodes, emitting near infrared radiation from 850 nm to 1050 nm, with a peak at 940 nm. The device produced 10 mW/cm^2 of energy operating on electrical power. Goto, E., et al, Treatment of Non-Inflamed Obstructive Meibomian Gland dysfunction by an Infrared Warm Compression Device, British Journal of Ophthalmology, Vol. 86 (2002), pp. 1403-1407.

[0014] United States Patent Publication US2004/0237969 titled "Therapeutic Eye and Eye Lid Cover" comprises a pair of goggles that are adapted to deliver humid saturated air around the eyelids. This modality is also discussed in greater detail in the article titled "Tear Film Lipid Layer Thickness and Ocular Comfort after Meibomian Therapy via Latent Heat with a Novel Device in Normal Subjects by Mitra et al, published in Eye, (2004) at pages 1-4.

[0015] United States Patent Publication US2003/0233135 titled "Method and Apparatus for Preventing and Treating Eyelid Problems" by Yee attempts to clear the plugged meibomian glands by means of electrical stimulation of the muscle of Riolan which the invention presumed to aid in the expression of the meibomian gland secretion.

[0016] It will be noted that all of the above-noted treatment modalities are not without their inherent drawbacks and deficiencies. For example, the current application of heat to the meibomian glands treatment is very time consuming. Normally, treatment consists of at least fifteen minutes of heat application which is followed by manual expression, which normally consists of placing a cotton swab or firm surface behind the portion of the eye lid where the blocked meibomian gland is located and manually squeezing the obstruction from the gland, the foregoing often being quite painful despite the use of topical anesthesia provided in eye drop form.

[0017] It is therefore an object of the present invention to provide a meibomian gland treatment that overcomes the drawbacks and deficiencies of the prior art.

[0018] Another object of the present invention is to provide a meibomian gland treatment device that is a single step treatment, thus, eliminating the need for manual expression.

[0019] Yet another object of the present invention is to provide a meibomian gland treatment device which treats meibomian gland disease and not merely its symptoms.

[0020] Still another object of the present invention is to provide a meibomian gland treatment device that restores the natural sebum flow rather than merely attempting to replace or replicate the naturally occurring tear components.

[0021] A still further object of the present invention is to provide a meibomian gland treatment device which minimizes the chance of infection.

[0022] A still further object of the present invention is to provide a meibomian gland treatment device that is simple, inexpensive, and easy to use by the health care provider and the patient.

SUMMARY OF THE INVENTION

[0023] According to the present invention there is provided a method and apparatus for treating meibomian gland dysfunction wherein the flow of naturally occurring secretions from the meibomian gland is restored. The method comprises applying a regulated force, regulated energy, regulated heat and/or chemical/pharmacological agent or combinations thereof to the eyelid to remove obstruction in order to restore the natural flow of secretion from the meibomian gland. In further aspects of the invention, the obstruction may be dissolved, extracted and/or loosened from the gland wall, softened prior to extraction and/or expansion of the gland orifice or channel such that the normal secretions from the gland are restored. In other aspects of the invention the obstruction may be loosened from the gland wall or softened prior to extraction. Additionally, the force applied to loosen the obstruction may be of a pre-selected magnitude and applied for a pre-selected period of time.

[0024] The apparatus comprises means for applying an external or internal force, energy or heat (or a combination of the foregoing) to the gland to loosen the obstruction. Further aspects of the invention include providing means for softening, breaking up, and/or liquefying the obstruction prior to extraction and means for extracting the obstruction.

BRIEF DESCRIPTION OF THE DRAWINGS

[0025] FIG. **1** is a schematic cut away view of the upper and lower eyelids illustrating the meibomian glands in cross section.

[0026] FIG. **2** is a cross sectional view of a single meibomian gland.

[0027] FIG. **3***a* is a perspective view of a system for clearing obstructed meibomian glands.

[0028] FIG. **3***b* is a broken away side view of the probe tip employed in the embodiment of FIG. **3***a*.

[0029] FIG. **4***a* is a perspective view of a second embodiment of the probe tip according to the present invention.

[0030] FIG. **4***b* is a broken away side view of the probe tip of FIG. **4***a*.

[0031] FIG. **4***c* is a broken away side view of the probe tip of FIGS. **3***a* and **4***a* in place on an eye lid.

[0032] FIG. **5** is broken away side view of an alternate for clearing obstructed meibomian glands according to the present invention.

[0033] FIG. **6***a* is a side view of an alternate embodiment of the probe tip having rollers for clearing obstructed meibomian glands according to the present invention.

[0034] FIG. **6***b* is a side view of another alternate embodiment of the probe tip having rollers for clearing obstructed meibomian glands according to the present invention.

[0035] FIG. **7** is a side view of another alternate embodiment of the probe tip having rollers for clearing obstructed meibomian glands according to the present invention.

[0036] FIG. **8** is a perspective view of a suction device for clearing glands according to the present invention.

[0037] FIG. **9** is a side view of another embodiment of the apparatus for clearing meibomian glands according to the present invention.

[0038] FIG. **10***a* is a schematic view of another embodiment of the apparatus for clearing meibomian glands according to the present invention.

[0039] FIG. **10***b* is an exploded view of the hand-held probe of the embodiment of FIG. **10***a*.

[0040] FIG. **10***c* is a side view of the hand-held probe of FIGS. **10***a* and **10***b* applying force to an eyelid.

[0041] FIG. **11***a* is a perspective view of another embodiment of the meibomian gland treatment apparatus in the form of the hydro-oculator according to the present invention.

[0042] FIG. **11***b* is a side view of the hydro-oculator of FIG. **11***a*.

[0043] FIG. **11***c* is a schematic side view of the hydro-oculator according to the present invention in place against the lower eyelid.

[0044] FIG. **11***d* is a schematic side view of the hydro-oculator according to the present invention in place against the lower eyelid and showing the fluid filled bladder beginning to expand.

[0045] FIG. **11***e* is a schematic side view of the hydro-oculator according to the present invention in place against the lower eyelid and showing the fluid filled bladder in a further expanded state.

DETAILED DESCRIPTION OF THE PREFERRED EMBODIMENTS

[0046] While the present invention will be described more fully hereinafter, it is to be understood at the outset that persons of skill in the art may modify the invention herein described while still achieving the favorable results of this invention. Accordingly, the description that follows is to be understood as a broad teaching disclosure directed to persons of skill in the appropriate arts, and not as limiting upon the present invention.

[0047] Referring now to FIG. **1**, the location of the meibomian glands M are shown on the upper and lower eyelids.

As briefly stated herein above, the upper lid contains approximately 25 meibomian glands and the lower lid contains approximately 20 meibomian glands. As shown in FIG. **2**, each gland includes a channel C into which the secretion flows and an orifice O which opens on to the eyelid margin and through which the secretion must flow in order to be added to the tear film upon blinking. It will be seen that the glands are of different size, depending upon the location in the eyelid and that the orifice O is narrower than the channel C.

[0048] As briefly mentioned herein above, obstruction composition will vary with the etiology which produced it. However, the obstruction will, in most cases, consist of a combination of, dead cells, keratin, bacteria, desquamated cells, sebaceous ground substance, milky fluid, inspissated or creamy secretions, or any combination of the foregoing in solid, semi-solid and thickened forms. The obstruction may be in the gland channel, at the gland orifice, atop the gland orifice or a combination of the foregoing. As employed herein, obstruction refers to any of the foregoing.

[0049] Thus, it is self-evident that any obstruction of the channel will restrict or prevent secretions from exiting the gland and further, that in order to clear such obstructions or "occlusions", the obstruction may be loosened from the gland wall, and/or broken up, fractured, softened, or liquified so that it will fit through the gland orifice without causing excessive pain. Lastly, the obstruction remnants must be expressed from the gland. The present invention provides a method and apparatus to accomplish these tasks.

[0050] According to the method of the present invention, the obstruction P should be softened or liquefied prior to attempting extraction or expression. With respect to the foregoing, the terms "softened" or "liqified" are intended to mean a "non-solid" flowable state. In addition, in order to be clinically satisfactory, softening or liquefying of the obstruction P should be effected as quickly as possible and regulated heat treatment time should be less than five (5) minutes with one to two (1-2) minutes being preferred without causing damage to the surrounding tissues of the ocular globe or the eye, such heat treatments can be electrical, laser heating, hot water conductive heating, infrared heating, ultrasonic heating, RF heating, etc. This necessarily requires the addition of a greater amount of energy (heating) than is deliverable by the conventional application of hot compresses which according to current practice are applied for 3-15 minutes prior to the clinician attempting to remove the obstruction. Once the obstruction is softened or liquified, removal is obtained by the application of a regulated force to the gland. More specifically, it is contemplated by the present invention that the force applied be a repeatable controlled force, as more fully explained herein below.

[0051] Treatment to remove the obstruction will involve the application of an external regulated force to the eyelid and/or directly over the obstructed orifice to loosen the obstruction within the gland G and the orifice. The means for applying the force may be selected from one or more of a number of modalities wherein the frequency of vibration may be including low frequency vibration (generally less than 1000 Hz), sonic (generally 1000 Hz to 20,000 Hz) or ultrasonic energy (generally greater than 20,000 Hz), fluid jet such as air or water, microwave energy, needles, micro-needles, laser energy, RF energy, aspiration/suction, vacuum, pressure, compression and functional equivalents thereof. In addition, once a modality is chosen, the physician will have to determine the optimum treatment parameters so that each of the foregoing modalities will be applied to the eyelid such that the force (or energy, as appropriate) provided thereby is transmitted through the eyelid tissue to the obstruction. Further, the treatment intensity and length of application of these external forces will vary with the size and composition of the obstruction. Once a treatment protocol is established, the force can either be set or variable within a preselected range. Experiments were performed using an eccentric vibrating motor applied directly to the human eyelids. Bench tests of the vibration revealed the following data points, specifically setting number 3 was shown to be clinically effective to loosen the obstruction within the meibomian gland and orifice:

Setting	Vibration Freq. (Hz.)	Vibration Amplitude (in/μm)
1	51	.001 in. (25.4 μm)
2	118	.004 in. (100 μm)
3	165.5	.0062 in. (157.5 μm)

[0052] Once the obstruction has been loosened from the walls of the gland, it may be operated upon such that it will pass through the orifice O in a manner which causes little or no pain or discomfort to the patent. This can be accomplished by heating to soften or liquify the obstruction up to a range of thirty seven degrees centigrade (37° C.) to fifty degrees centigrade (50° C.) with the preferred operating range being forty degrees centigrade (40° C.) to forty seven degrees centigrade (47° C.) and desired modality of forty two degrees centigrade (42° C.) to forty six degrees centigrade (46° C.) so that it easily passes through the orifice (or with minimal non-painful expansion thereof). Modalities for heating may include conduction, convection and radiation supplied by one or more of the following: thermal conduction, thermal convection, ultrasonic energy, laser energy, RF energy, direct and/or indirect transfer from heat source ad microwave energy which may be applied for a preselected period of time. By varying the amplitude, intensity and length of application, some of the foregoing modalities may also be employed to fracture or break up the obstruction. It will be noted that a closed loop feedback control system, well known to those skilled in the art (not shown) may be employed during heating to measure temperature proximate the eyelid to ensure that the obstruction does, in fact, reach a temperature sufficient to turn the obstructive material into a flowable, liquid or semi-liquid state.

[0053] Extraction of the softened, broken apart or fractured obstruction may be accomplished by one or more of the following: needles, micro-needles, aspiration/suction, vacuum, pressure and compression. One embodiment of the invention is a suction system that is placed over the gland orifice may be employed to suck out the components of the softened, loosened or liquefied obstruction or the pieces thereof, as appropriate or alternatively, to employ suction to collect the obstruction as it exits the gland orifice. In order to be clinically effective, the foregoing modalities for extracting or expressing the obstruction should be administered in a fashion that is regulated, i.e., done in a repeatable manner.

[0054] An apparatus for unplugging the obstructed gland channel C is schematically illustrated in FIG. **3***a*. The apparatus comprises a power source **100** which may be direct current (battery powered) or alternating current (wall socket) as desired. The power source **100** is connected to a controller, generally indicated at **200**, which includes a power on/power off switch **210**. The controller **200** includes a means **220** for applying an external force to the gland to loosen the obstruction. The means **220** includes a probe **230**, which is adapted to vibrate at a preselected frequency at preselected amplitude. The probe **230** may vibrate at sonic or ultrasonic frequencies as needed. In addition, means for varying the frequency **240** and amplitude **250** of the probe output, well known to those skilled in the art, are provided. The means **220** for applying the regulated external force or regulated energy to the obstruction may also include fluid jet, air fluid, water fluid, microwave energy, needles, micro-needles, laser energy, RF energy, aspiration, suction, vacuum, pressure, piezoelectric, and compression.

[0055] Turning now to FIG. **3**B, a small ultrasonic probe **230** (and specifically the probe tip) is illustrated in FIG. **4**C in place on the eyelid. The probe **230** is adapted to deliver ultrasonic vibrational energy through the skin into the obstruction P in order to loosen, liquefy, and/or fracture the obstruction. More specifically, by tuning the probe output so that the obstruction P resonates (by adjusting the frequency and amplitude of the signal) energy is efficiently transferred to the obstruction and sympathetic vibration of the obstruction P occurs with minimal energy transfer to the surrounding tissues. In some instances, vibration alone may be sufficient to change the characteristics of the obstruction P such that vigorous blinking may express the obstruction remnants.

[0056] In addition to vibration alternative force, energy, aspiration and/or chemical/pharmacological agents can be used to open up the channel C. The probe may be further equipped with aspiration means **260** (best illustrated in FIG. **4**C for introducing aspiration, suction or vacuum into the gland channel C to evacuate the obstruction remnants. Alternatively, heat and aspiration may be employed in lieu of or in addition vibration.

[0057] In another aspect of the invention, the probe **230** may be equipped with a means for heating **270** such as a solid state heating element which may be regulated to provide relatively precise amounts of energy in the previously mentioned ranges that assists in softening, liqufying or melting the obstruction P via heat transfer through the tissue when the probe is placed against the tissue.

[0058] A second embodiment of the invention (FIG. **5**) employs microdermabraision or exfoliation to remove any cells or cellular material that may have overgrown the gland opening. Microdermabraision is a process that was developed for use in dermatology to remove dead skin cells. As shown in FIG. **5** a probe or tip **330** is equipped with an abrasive surface **310** that is adapted to scrape the skin. The abrasive employed is usually a diamond power or other suitable material, well known to those skilled in the art. An inner tube **320** having a central bore **325** includes holes defining openings **330** through which a fluid such as air is pumped. An outer covering **335** surrounds the tube **320**, but at its lower edge extends slightly lower and is spaced from the abrasive surface **310** and a space is defined between the lower ends of the respective tubes **320**, **335**. The outer covering is connected to aspiration, vacuum, and/or suction that operates as described herein below.

[0059] In operation, the clinician would place the abrasive tip **310** in contact over the gland orifice creating a seal between the tip and the skin. Movement of the probe **330** would cause the abrasive **310** on the bottom of the tip to separate the cells from the skin and the aspiration, suction or vacuum would extract the cellular material from the vicinity of the gland opening. In addition, depending upon the obstruction, aspiration, suction and/or vacuum alone may be sufficient to extract the obstruction.

[0060] Additional features may also be providing to the microdermabraision tip such as a heating element **340** which could be placed in the outer covering **335** near the tip. In addition, the inner tube **320** could be equipped such that ultrasonic energy could be delivered to the obstruction as discussed herein above.

[0061] Another embodiment of the invention may employ a chemical agent to clean the gland margin and to remove or exfoliate cells from the meibomian gland orifice. For example Ophthaine® or a similar pharmacological agent may be employed to assist in removing epithelial cells from over the gland orifice. A probe similar to that shown in FIG. **5** may be employed, except that the inner tube will deliver the chemical agent and the suction applied by the outer covering will be used to evacuate the used chemical agent and cellular material mixture away from the gland margin. Similarly, the heating and vibrational features discussed above may also be included.

[0062] A further embodiment of the invention may deliver vibrational and/or thermal energy to the obstruction P without contacting the gland. One potential energy source is laser light supplied by titanium, argon, krypton or microwave energy. Extraction of the obstruction would be accomplished by the means described herein above.

[0063] A third embodiment of the invention employs pressure applied to the tissue as shown in FIGS. **6***a*, **6***b* and **7** by rollers (or drums) **375** which are placed in front of and/or behind the meibomian gland with the rollers applying constant regulated pressure to the meibomian glands to apply a "milking" type force to expel the obstruction to return the gland to normal secretion levels. The rollers can be connected to heat, aspiration, vacuum, and/or suction that operate as described herein.

[0064] In operation, the physician would place the rollers **375** in contact with the eyelid, either inside, outside or both. Lateral movement of the rollers **375** would cause pressure to be applied to the gland to remove the obstruction. Alternatively, aspiration, suction and/or vacuum could be applied to extract the obstruction and material from the vicinity of the gland opening. In addition, depending upon the obstruction, aspiration, suction and/or vacuum alone may be sufficient to extract the obstruction.

[0065] Additional features may also be provided to the rollers such as a regulated heating element (not shown) which could be placed in the outer covering near the tip as shown in FIG. **6**A. In addition, the roller **375** could be equipped such that ultrasonic energy could be delivered to the obstruction as discussed herein above.

[0066] FIG. **8** illustrates a prototype hand held suction system generally indicated at **400** that was constructed. The system comprised an AC power supply **410** which powered a suction pump **420** to which tubing **430** was connected. At the opposite end of tubing **430** a probe **440** was connected. A tip **450** having a 1 mm diameter and a 200 micron orifice was attached to the end of the probe **440**. The probe end **460** was curved for ergonomic access to the gland orifice. In use, the tip **450** is placed on or proximate the gland orifice and the applied vacuum is used to collect the obstruction as it exits the orifice or may alternatively be employed to assist in expression of the obstruction.

[0067] FIG. **9** illustrates another prototype of a hand held apparatus generally indicated at **500** that was constructed. The system comprised a power supply **510** which powered an electromagnet (not shown) which was encased in a handle **530** that may be easily held by the clinician in one hand. A rod **540** is mounted for reciprocating motion to the output of the electromagnet. The throw or amount of movement of the rod **540** is 0.5 mm. At the end of rod **540** is mounted a back plate **550** which is substantially perpendicular to the axis of rod **540**. Further, a lever **560** is pivotally mounted to rod **540** and operates to actuate a roller **570**. A heating means or heater **580** was mounted in backplate **550**. The heater **580** was also provided with an appropriate power source. In operation, the device is positioned such that the back plate **550** is positioned between the cornea and the back surface of the eye lid. The lever **560** is actuated such that the roller **570** comes into contact with the front surface of the eye lid. The arc of the roller is such that the eye lid is squeezed between the foregoing The clinician may elect to maintain the back plate and the roller under tension for a preselected period of time to soften the obstruction. Once the desired temperature has been reached, further pressure on the lever **560** will cause the roller to move from the bottom of the meibomian gland (the end away from the orifice) to the top of the gland to express the obstruction from the gland in am "milking type" motion. Thus, a repeatable regulated method for opening obstructed meibomian glands is provided.

[0068] The embodiment illustrated in FIGS. **10**A through **10**C, the present invention prototype is a hand held apparatus generally indicated at **600**. The apparatus comprises a power source **610** which may be a DC source such as a battery or an AC source similar to those discussed herein above. The power source **610** resides within a housing **620**. The power source **610** provides electrical current to a wave form generator **625** which powers an acoustic amplifier **630** (for example, a small audio speaker) also located within housing **620** and mounted at an ergonomic angle therein. The acoustic amplifier **630** is programmed to vibrate in a wave format at a frequency of 0 to 200 Hz at an amplitude in the range of 0.25 mm to 5 mm. Initial experiments indicate that free air amplitude of 3-4 mm at a frequency of 60 Hz to 125 Hz is well tolerated and after 10-30 seconds of application seems to impart a natural numbing effect to the eyelid/gland. Mounted in operative association atop the acoustic amplifier **630** is an annulus **635** that floats thereon and includes a cone shaped housing **640** extending perpendicularly away from the amplifier **625** that encloses the amplifier **625** The end of the housing **640** is adapted to mount a variety of tips **650**. For example, the tip may comprise a roller **655** mounted for rotation in a cradle **665**. Further, the tip **650** may be modified to include a regulated heating element (not shown) that acts to soften the obstruction. Other tip configurations may include a vacuum for collecting the obstruction after expression thereof from the gland and different tip configurations to apply various contact areas and resulting forces. Thus, it will be seen that the obstruction is actually subjected to a pair of forces, the first being the weight of the device itself on the gland which may be combined with additional pressure by the health care provider pressing on the gland plus the additional intermittent force delivered to the gland by the vibratory or pulsatory force of the tip **650**. The first force may be a fixed constantly applied force or one that increases to a preselected maximum. Testing has indicated that use of the foregoing method, i.e., applying a first force to the meibomian gland and a second pulsatile force to the meibomian gland allows delivery of a greater quantity of energy to the obstruction while lowering the perceived pain level to the patient. It is believed that this is the result of an overall lower degree of localized nerve stimulation about the orbit. Heating the gland is also beneficial in the event softening of the obstruction is needed prior to expression thereof.

[0069] Another embodiment of the invention is shown in FIGS. **11**A through **11**E wherein the treatment apparatus is incorporated into a goggle-like device, termed herein as the "hydro-oculator" which is a head borne device that locates the treatment mechanism proximate the eyelids, generally indicated at **700**. The hydro-oculator **700** comprises a flexible frame **705** having a headband **710** (which may be elastic) connected thereto at each end. Connected to the bottom of the frame **705** is a molded housing **720** which has an angled leg **725** which is adapted to overlie the cheek bone when the apparatus is in use. Further, an expandable fluid or gas impermeable container referred to herein as a bladder **730** is positioned within the cavity defined by the space between the housing and the lower eye lid. A pumping mechanism is provided that facilitates movement of a fluid or gas, collectively referred to herein as a "medium" (not shown) into and out of each of the respective bladders **730**. According to the invention, the patient would position the hydo-oclulator **700** on his or her head such that the leg **725** of molded housing **730** rests on the upper cheek bone as best shown in FIGS. **11**C through **11**E. The regulated heated medium is pumped into the bladders **730** causing partial expansion thereof in order to apply a pressure to the eyelids in the range of from zero to fifty pounds per square inch (50 psi). The bladder containing the heated medium (a water based solution being preferred) is positioned on the eyelids over the meibomian glands for a preselected period of time (up to thirty minutes) to soften the obstruction. It is desirable to place the heat source in direct contact with the eyelids which thereby transmits thermal energy to the meibomian glands, in contrast to the prior art which heats a confined space in front of the open eye where heat could be transmitted to the ocular bulbi structures such as the crystalline lens which introduces the possibility of cataract formation. Thereafter, the bladder is slowly expanded to a preselected maximum such that the force on the gland increases from the bottom up to the top or orifice end of the gland such that the obstruction is expressed therefrom in a "milking" type of action. Milking may be applied at a preselected frequency between zero and five hertz (0-5 Hz) and for a preselected period of time, usually not more than thirty minutes. In addition, the medium may be "pulsed", i.e., milkingly moved into and out of the bladder to further facilitate

expression of the obstruction from the gland. Pulsing may also be achieved by providing an external force to the bladder and transmitting the force through the fluid into the gland. Pulsing may be applied at a preselected frequency between zero and one hundred hertz (0-100 Hz) for a preselected period time, usually not more than thirty (30) minutes. A chemical or pharmacological agent may be inserted into the meibomian gland to assist in softening the obstruction and any of the extraction modalities mentioned above may be further employed to assist in removing the obstruction.

[0070] Another embodiment of the invention may employ a chemical agent or compound to clean the glandular margin to remove or exfoliate cells from the gland orifice. A probe similar to that shown in FIG. **5** may be employed, except that the outer drum or roller will deliver the chemical agent and the suction applied by the outer covering will be used to evacuate the used chemical agent and cellular material mixture away from the gland margin. Similarly, the heating and vibrational features discussed above may also be included.

[0071] A further embodiment of the invention may deliver vibrational and/or thermal energy to the obstruction P without contacting the gland. One potential energy source is laser light supplied by a titanium-sapphire, argon, krypton, RF energy or microwave energy. Extraction of the obstruction would be accomplished by the means described herein above.

[0072] Another embodiment of the invention employs the use of chemical or pharmacological agents to open or dilate the gland and gland orifice wherein the obstruction naturally is expressed and returns the normal secretions of the gland. Alternatively, the chemical or pharmaceutical agent would be used to soften or breakup the obstruction with such obstruction being expressed with the use of devices as defined above or combinations thereof. Chemical or pharmacological agents may also be used in connection with the device for post treatment. Once the glands have been opened then chemical or pharmacological agents may be used to enhance the normal production or secretion to maintain the glands in its unblocked state.

[0073] Dilation of the meibomian gland channel and orifice may also be employed to loosen or free the obstruction from the gland walls. Dilation may be accomplished by chemical, pharmacological, or mechanical means.

[0074] Stimulation of the meibomian gland may also be employed in conjunction with the other modalities discussed above to loosen or fracture the obstruction.

[0075] As mentioned herein above, the present invention has been described in detail on conjunction with the figures in connection with the meibomian glands of the eye. The reader will note that the principals of this invention may be applied with equal efficacy to the other glands of the human body and potentially to valuable domesticated farm animals to treat various ailments.

That which is claimed is:

1. A method of treating dry eye in humans wherein the flow of naturally occurring secretion to the eye is occluded due to the presence of an obstruction of the meibomian gland in the eyelid and comprising the steps of:

softening the obstruction; and

applying a regulated force to the eyelid to express the obstruction from the meibomian gland.

2. The method according to claim 1 wherein the step of softening comprises the application of regulated thermal energy to the eyelid to heat the obstruction to a temperature of between about 37° C. to about 47° C.

3. The method according to claim 2 wherein the thermal energy applied is selected from the group of modalities consisting of conduction, convection and radiation.

4. The method according to claim 2 wherein the step of softening further includes the step of applying a heated contained medium to the surface of the eyelid and heating the medium so that the obstruction is heated to a temperature of between about 37° C. to about 47° C.

5. The method according to claim 4 where in the medium is a fluid.

6. The method according to claim 4 wherein the medium is a gas.

7. The method according to claim 4 wherein the obstruction is heated to a temperature of between about 42° C. to about 46° C.

8. The method according to claim 4 wherein the heated contained medium is contained within a bladder positioned proximate the eyelid and further including the step of pulsating the contained medium to express the obstruction from the meibomian gland.

9. The method according to claim 5 wherein the step of pulsating comprises the step of moving a preselected quantity of medium into and out of the container.

10. The method according to claim 6 wherein the step of pulsating comprises the application of a repetitive external force to the container and transmitting the force through the medium to the surface of the eyelid and into the meibomian gland.

11. The method according to claim 6 wherein the step of pulsating is delivered at a frequency of less than 1000 Hz.

12. The method according to claim 6 wherein the step of pulsating is delivered at a frequency of between about 0 Hz to about 50 Hz.

13. The method according to claim 1 wherein the softening of the obstruction and the force applied to the meibomian gland are both applied with a hand held apparatus.

14. A method of treating dry eye in humans wherein the flow of naturally occurring secretion to the eye is occluded due to the presence of an obstruction in the meibomian gland in the eyelid and comprising the steps of:

softening the obstruction by application of thermal energy to the eyelid to heat the obstruction to a temperature of between about 37° C. to about 47° C.;

applying a first force to the eyelid;

applying a second pulsatile force to the eyelid while continuing to apply the first force.

15. The method according to claim 14 wherein the step of softening the obstruction comprises conduction of thermal energy to the gland from a heated medium applied to the surface of the eyelid.

16. The method according to claim 14 wherein the first force comprises the application of the heated medium to the surface of the eyelid.

17. The method according to claim 16 wherein the heated medium is contained within a bladder positioned proximate

the surface of the eyelid and wherein the bladder is expandable to a preselected size to deliver the first force to the surface of the eyelid.

18. The method according to claim 17 wherein the first force is constantly applied and increases to a preselected maximum.

19. The method according to claim 18 wherein the second pulsatile force is delivered at a frequency of less than 1000 Hz.

20. The method according to claim 18 wherein the second pulsatile force is delivered at a frequency of between about 0 Hz to about 50 Hz.

21. The method according to claim 18 wherein the second pulsatile force is delivered by the movement of the medium into and out of the bladder at a preselected rate.

22. The method according to claim 14 further including the step of applying a chemical or pharmacological agent to the gland.

23. A method of treating dry eye in humans wherein the flow of naturally occurring secretion to the eye is occluded due to the presence of an obstruction in the meibomian gland in the eyelid and comprising the steps of:

softening the obstruction by application of thermal energy to the eyelid to heat the obstruction to a temperature of between about 37° C. to about 47° C., the thermal energy being delivered by conduction from a heated medium contained in an expandable bladder applied to the surface of the eyelid;

applying a first force to the eyelid by positioning the bladder proximate the eyelid and selectably expanding the bladder;

applying a second pulsatile force to the eyelid by applying a pulsatile force to the bladder.

24. The method according to claim 23 wherein the pulsatile force comprises the movement of a portion of the fluid into and out of the bladder at a preselected frequency.

25. An apparatus for treating dry eye in humans wherein the flow of naturally occurring secretion to the eye is occluded due to the presence of an obstruction in the meibomian gland in the eyelid and comprising:

heating means for softening the obstruction by application of thermal energy to the eyelid to heat the obstruction to a temperature of between about 37° C. to about 47° C., the thermal energy being delivered by conduction from a heated medium contained in an expandable bladder applied to the surface of the eyelid;

means for delivering a first force to the eyelid by positioning the bladder proximate the eyelid and selectably expanding the bladder;

means for applying a second pulsatile force to the eyelid by applying a pulsatile force to the bladder.

26. An apparatus for treating dry eye in humans wherein the flow of naturally occurring secretion to the eye is occluded due to the presence of an obstruction in the meibomian gland in the eyelid and comprising:

heating means for softening the obstruction by application of thermal energy to the eyelid to heat the obstruction to a temperature of between about 37° C. to about 47° C., the thermal energy being delivered by conduction from a heated medium contained in an expandable bladder applied to the surface of the eyelid;

means for delivering a regulated force to the eyelid by positioning the bladder proximate the eyelid and selectably expanding the bladder.

27. A method of treating dry eye in humans wherein the flow of naturally occurring secretion to the eye is occluded due to the presence of an obstruction in the meibomian gland in the eyelid and comprising the steps of:

softening the obstruction by application of thermal energy to the eyelid to heat the obstruction to a temperature of between about 37° C. to about 47° C.;

applying a regulated force to the eyelid.

28. The method according to claim 27 wherein the duration of treatment is 0 to 30 minutes.

29. The method according to claim 27 wherein the duration is selectable to range between 0 to 30 minutes.

* * * * *