Virtual Library of Mechanical Watch Movements

L. C. Tam, Y. Fu and R. Du

The Chinese University of Hong Kong, lctam@mae.cuhk.edu.hk

ABSTRACT

Mechanical watch is one of the most intricate mechanical devices that men have ever invented. Throughout the history, it has been studied by many such geniuses as Galileo and Huygens. It still attracts many people today. In general, a mechanical watch movement may consist of some 100 components. Among these components, the escapement is the most important. It determines the timekeeping accuracy, and is often regarded to as the brain of the movement. According to literatures, there are over 100 different types of escapements. In this paper, we present a virtual library of mechanical watch movements. Our objective is to provide an educational tool for mechanical engineers or anyone who are interested to understand the working principle of the mechanical watch movement. Currently, it consists of four different escapements: the Graham escapement, the English lever escapement, the Swiss lever escapement, and the Daniels co-axial double- wheel escapement. For each escapement, the detailed background information, CAD models, and video clips are given. The virtual library is accessible on the Internet at: http://www.ipe.cuhk.edu.hk/projects10_library.html.

Keywords: Mechanical watch movement simulation, escapement, CAD modelling

1. INTRODUCTION

The mechanical watch is one of the most intricate mechanical devices that men have ever invented. The first mechanical watch appeared in the middle of the sixteen century. Since then, it has been studied by many people, including such geniuses as Galileo, Huygens and Hooke. Today, it still fascinates people around the world. As a result, the watch industry continues to grow in recent years. For example, Swiss watch exports grow at a steady rate of 12% in 2005 [1].

Generally speaking, a mechanical watch is made of five parts as shown in Figure 1. These include: the winding mechanism, the power supply (mainspring), the gear train, the display and the escapement. Among them, the escapement is the most important and is often referred to as the brain of the watch movement. According to literatures, there are over one hundred different types of escapements. Though, they share the same function: to provide a stable oscillation feedback to regulate the timekeeping accuracy.

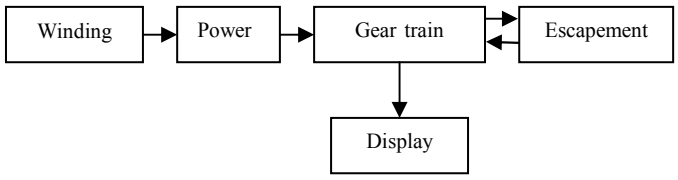

Fig. 1: The five parts of a mechanical watch movement.

Presently, dozens of information sources about the mechanical watch movements are available on the Internet. Followings are two of the popular ones.

(1). Clock-Watch: History and Technique of Clocks and Watches [2]. This website contains a number of 2D animations about different types of escapements with the help of Microsoft Flash. It even allows users to interact with

IPR2024-00765
Garmin EX1019 Page 1

some of the animations to change the model parameters, such as the oscillating angles and the size of the components. However, it is just animations that cannot show the detailed design and the working principle of the escapements.

(2). Mark Headrick's Horology Page [3]. This is the homepage for the book "Clock and Watch Escapement Mechanics" authored by Headrick in 1997. The book showed how to draw an escapement step by step. Both escapements of mechanical clocks and watches are covered. Its descriptions are so detailed that one can learn the geometry and the drawing techniques. Although it gives detailed explanation of the escapement, the animations on the website are rather crude. It shows only a simple wireframe model missing all the details. Hence, it is impractical to learn the details through these animations.

We build a virtual library of the mechanical watch movement to provide a convenient and reliable source of information to demonstrate the working principles of the watch and clock designs. The virtual library contains 3D models, video clips, as well as other information, such as the history of the invention and current models in the market.

The rest of the paper is organized as follows. Section 2 is the main body of the paper containing the structure of the virtual library and four different escapements. Section 3 presents the way to build the virtual library and its applications. Section 4 includes the conclusions and future work.

2. THE VIRTUAL LIBRARY

The structure of the virtual library is shown in Figure 2. Currently, it contains four different escapements belonging to two different categories. They are the Graham escapement, the English lever escapement, the Swiss lever Escapement and the Daniels co-axial double-wheel escapement. The details are presented in the subsequent sections.

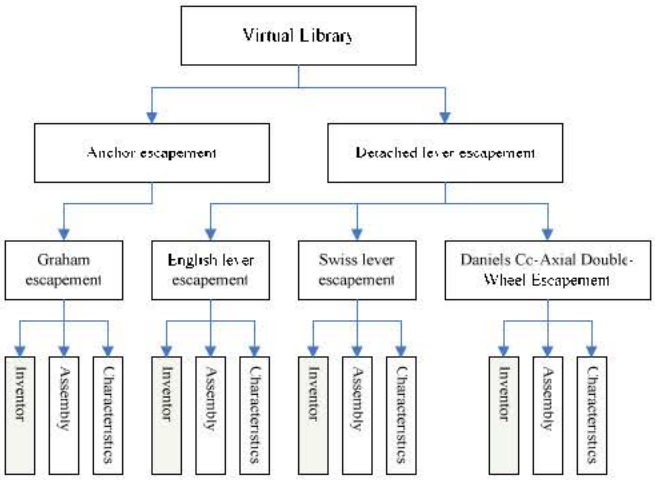

Fig. 2: The structure of the virtual library.

2.1 Graham Escapement

In 1715, English watchmaker George Graham (1673-1751) invented the Graham Escapement. Born in Hethersgill, England, Graham was one of the most well-known horologists of the eighteenth century. In 1688, he became an apprentice to Henry Aske who was a clockmaker in London. Seven years later, he worked with another renowned horologist Thomas Tompion. Besides the Graham escapement, he is also the inventor of the mercury compensation pendulum, the cylinder escapement for watches and the first chronograph. The mercury pendulum can achieve accuracy within a few seconds per day. Graham refused to patent these inventions because he felt that they should be used by other watchmakers. He is a very talented and generous inventor.

The Graham escapement is also called the deadbeat escapement. It is modified from the anchor escapement by eliminating recoil [4]. Graham Escapement is mainly used in pendulum clocks but not wrist watches. This is because it

IPR2024-00765
Garmin EX1019 Page 2

requires the use of a pendulum and could only work well in the upright position. This escapement is still widely used today.

Figure 3 shows the assembly of the Graham escapement. It consists of the escape wheel, the pallet fork, and the pendulum.

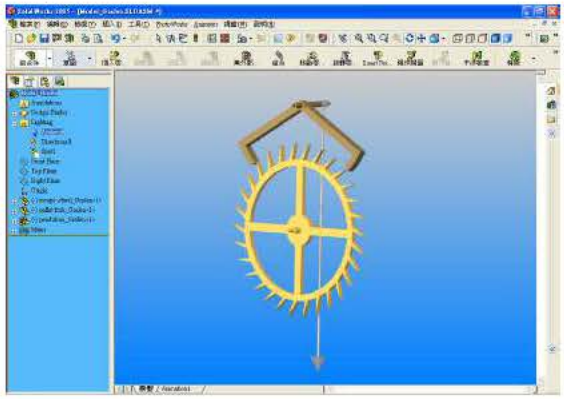

Fig. 3: The model of Graham Escapement.

The working principle of the Graham Escapement is straightforward. Figure 4 shows the steps that the escapement goes through in a complete cycle. Note that in the figure the circle indicates the points to be noticed and the arrow shows the rotation direction of the escape wheel. Figure 4(a) shows the 1st shock, which is the contact of a tooth on the escape wheel onto the entry pallet of the pallet fork. Figure 4(b) shows the 2nd shock, at which the pendulum reaches the farthest point and begins to move to the opposite direction. Figure 4(c) shows the 3rd shock, another tooth on escape wheel touches the exit pallet of the pallet fork. Figure 4(d) shows the 4th shock, the pendulum reaches the other farthest point. Finally, Figure 4(e) shows the 5th shock, the pallet fork and pendulum return to their original position completing a cycled.

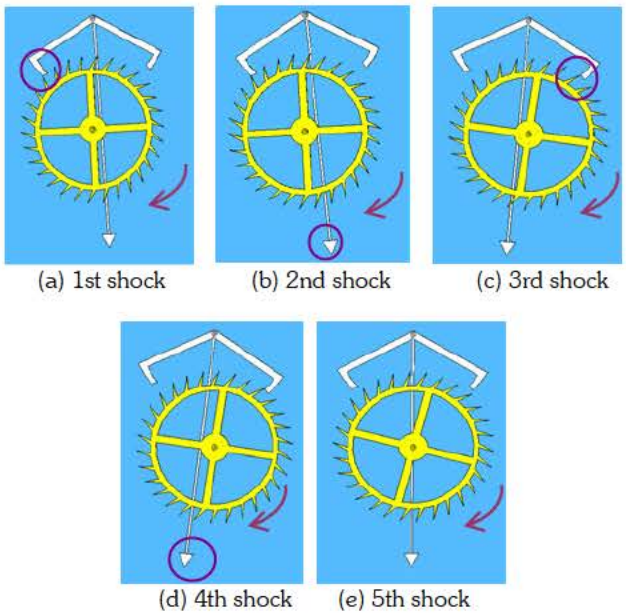

Fig. 4: The five shocks of Graham Escapement.

2.2 English Lever Escapement

This is one of the first lever escapements invented by an English clockmaker Thomas Mudge (1715 - 1794) in 1754. Mudge was apprenticed to George Graham. His work was treated as a mark of quality at that time. Since he is an Englishman, this escapement design is referred to as the English lever escapement. It is one of the earliest detached level mechanisms that do not require a pendulum [5].

The English lever escapement is composed of four parts: the escape wheel, the anchor, the pallet fork, and the balance wheel (with the hairspring). It is assembled in the right-angled triangle form. The axis of balance wheel, pallet fork and the escape wheel forms a right-angled triangle as shown in Figure 5.

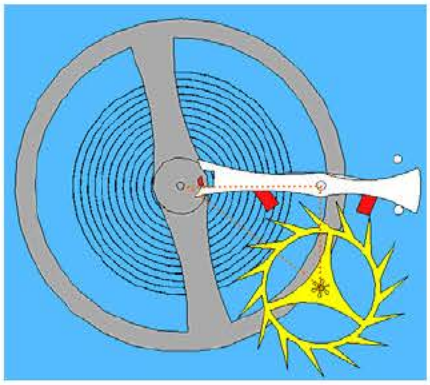

Fig. 5: The model of English level escapement. The dotted lines indicated the right-angled relationship of the balance wheel, the pallet fork and the escape wheel.

Figure 6 shows the two levels of the pallet fork. Level One works with the balance wheel and it has a slot to hold the ruby on the balance wheel. Level Two works with the escape wheel and there are two rubies on the pallet fork.

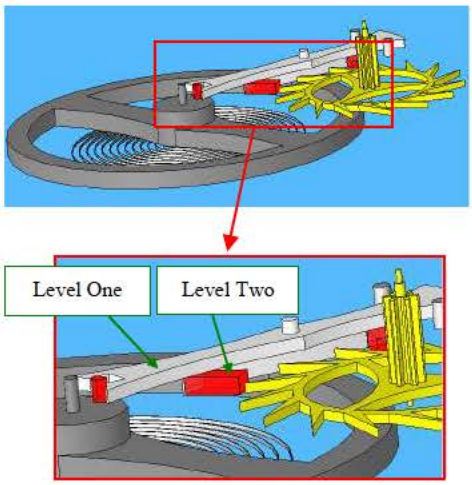

Fig. 6: The two levels of pallet fork.

Figure 7 shows the movements of the English lever escapement in a complete cycle. The 1st shock is the contact of the impulse pin (the half-circle shaped ruby on the balance wheel) with the entry of the pallet fork. At the meantime, the tail of the pallet fork touches one of the banking pins as shown in Figure 7(a). Then, the escape wheel is stopped by one of the rubies on the pallet fork causing the locking of the escape wheel. This is the 2nd shock as shown in Figure 7(b). Figure 7(c) shows the 3rd shock. At this time, the tooth of escape wheel contacts the exit pallet of the pallet fork.

IPR2024-00765
Garmin EX1019 Page 4

The escape wheel is stopped until the impulse pin on the balance wheel collides with the entry of the pallet fork again. As shown in Figure 7(d), the 4th shock is the situation that another side of the tail of the pallet fork touches another banking pin. At the same time, the balance wheel pauses and then starts rotating to the opposite direction. The 5th shock is the last one, the impulse pin hits the other side of the entry of the pallet fork. This is shown in Figure 7(e).

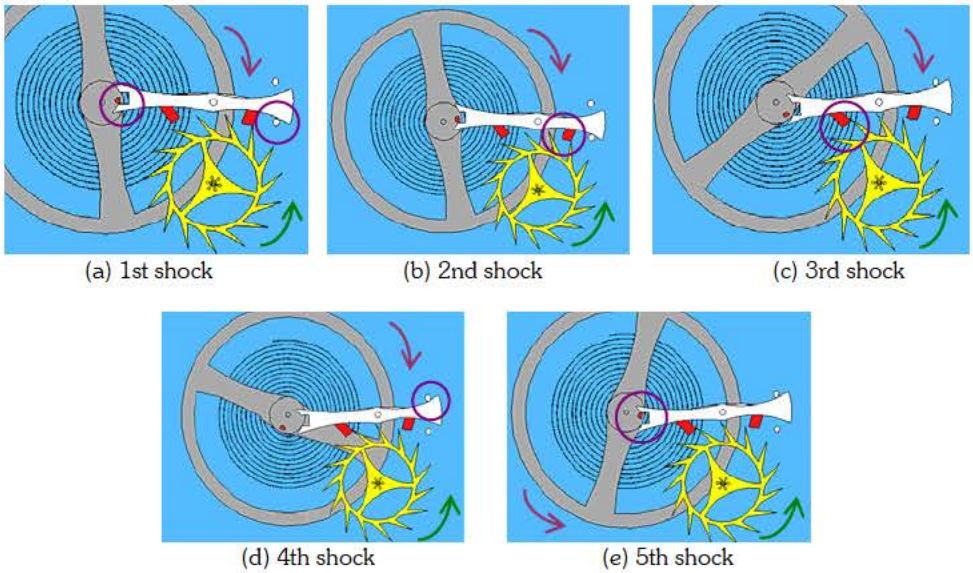

Fig. 7: The five shocks of English Lever Escapement.

2.3 Swiss Lever Escapement

Appeared in the middle of the nineteenth century in Switzerland, the Swiss lever escapement is a modification of the English lever escapement. It is the most common escapement in the world. In fact, at least 95% of the existing mechanical movements use this escapement because of its high accuracy and reliability.

The model of the Swiss lever escapement is shown in Figure 8. It consists of the balance wheel, the hairspring, the pallet fork, and the escape wheel. Swiss lever escapement may have many different versions. For this model in Figure 8, there are 15 club teeth on the escape wheel, therefore: 360 / (2 x 15) = 12; that is, the angle for each impulsive movement is 12.

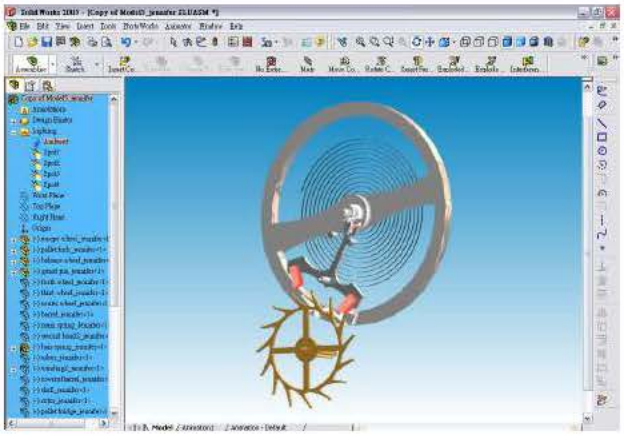

Fig. 8: The assembly model of English Lever Escapement.

Similar to the English lever escapement, during a complete cycle, five shocks occur. The 1st shock (Figure 9(a)) corresponds to the contact of the impulse pin (the ruby on the balance wheel) with the entry of the pallet fork. The 2nd shock is shown in Figure 9(b). It is caused by the contact of the escape wheel tooth with the impulse plane of the entry pallet of the pallet fork. As shown in Figure 9(c), the 3rd shock is the situation when the other side of the entry of the pallet fork contacts the impulse-pin. Figure 9(d) shows the 4th shock. It happens when the escape wheel tooth touch the locking-plane of the exit pallet of the pallet fork. The last stage is the 5th shock (Figure 9(e)). It is the situation that the pallet fork contacts the banking pin. The whole cycle is completed by then.

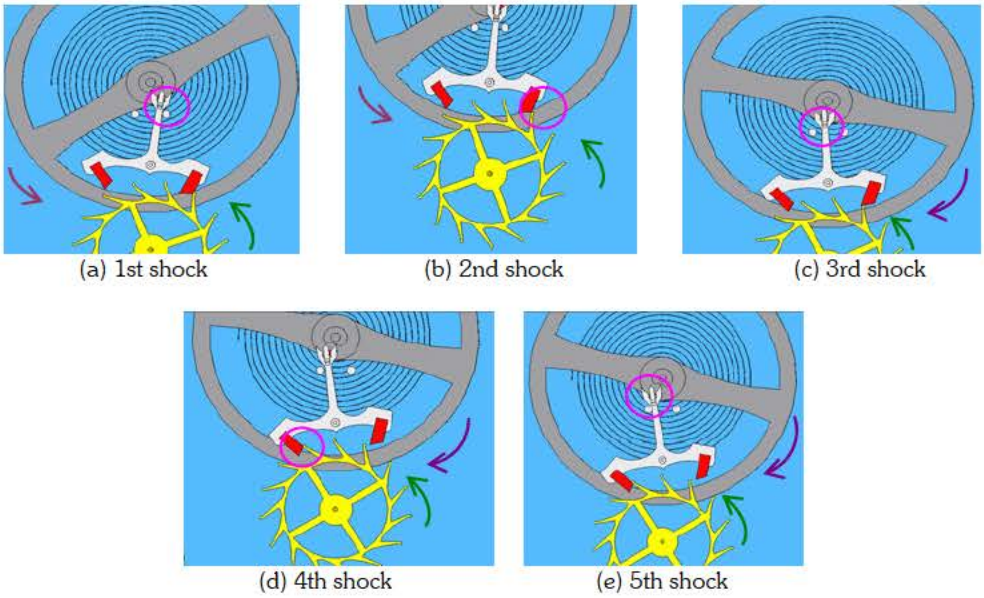

Fig. 9: The five shocks of the Swiss lever escapement in a cycle.

2.4 Daniels Co-Axial Double-Wheel Escapement

The Daniels co-axial double-wheel escapement is the masterpiece of Dr. George Daniels (1926 – Now). Dr. Daniels is a professional horologist with rich experiences. Besides inventing the co-axial escapement, he is also a famous author on mechanical watch movements and the past President of the Horological Institute. He has received a number of prestigious international awards [6].

The Daniels co-axial double-wheel escapement is much more complicated than the Swiss lever escapement. In order to show the structure and movements in a clear way, a wire-frame view of this escapement is shown in Figure 10. With the wire-frame mode, all the three rubies on the pallet fork could be seen at the same time. It helps to gain better understanding of the whole structure and its movements.

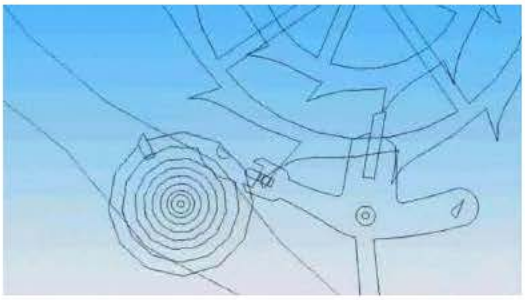

Fig. 10: The wire-frame model of the Daniels co-axial double-wheel escapement.

IPR2024-00765
Garmin EX1019 Page 6

The escapement (Figure 11) consists of two escape wheels, a pallet fork, and a balance wheel (with hairspring).

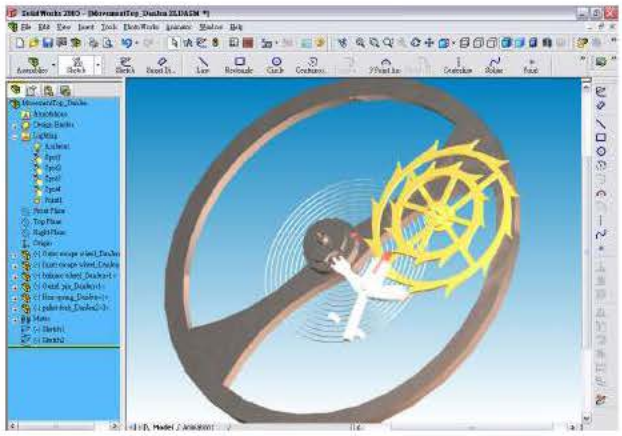

Fig. 11: The model of Daniels co-axial double-wheel escapement.

Figure 12 shows the details of the escapement. From the figure, it is seen that the escapement has three levels. In Level One, the balance wheel contacts the pallet fork. The banking pins are also at this level. The escape wheel has two levels, called the inner escape wheel and the outer escape wheel, with 12 teeth in each level. In Level Two and Level Three, the pallet fork contacts the inner and outer parts of the escape wheel.

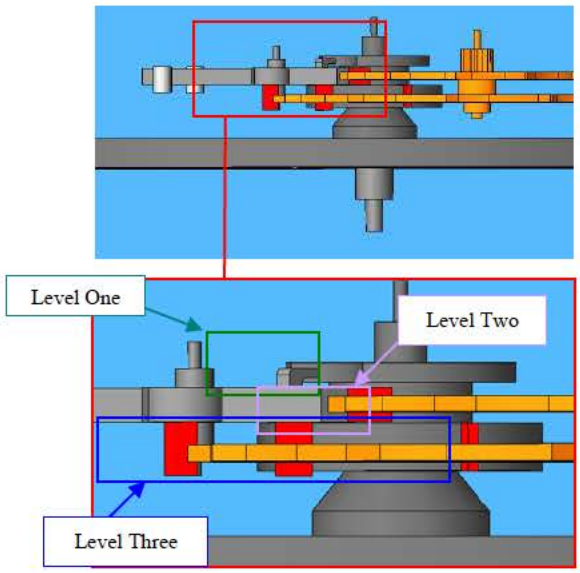

Fig. 12: This is the top view of the assembly showing the relationship of the balance wheel, the pallet fork and the escape wheel in three levels.

As shown in Figure 13, the Daniels co-axial double-wheel escapement has five shocks in a complete cycle. The cycle of movement start from the 1st shock as shown in Figure 13(a). It is the contact of the semi-circular impulse-pin with the entry pallet of the pallet fork. In the meantime, the trapezium shape ruby on the balance wheel pushes the outer escape wheel to move in the clockwise direction. Figure 13(b) shows the 2nd shock. It happens when the outer escape wheel stopped by the impulse stone at the head of the pallet fork. The inner escape wheel touches the trapezium shape impulse stone of the pallet fork. The next stage is the 3rd shock, shown in Figure 13(c). It is the situation when the

IPR2024-00765
Garmin EX1019 Page 7

other side of the entry pallet of the pallet fork contacts the semi-circle shaped impulse-pin on the balance wheel. Figure 13(d) shows the 4th shock. It occurs when the outer escape wheel is stopped by the locking-stone on the right arm of the pallet fork. The 5th shock (Figure 13(e)) is the situation that the pallet fork contacts one of the banking pins. The cycle of the escapement is then completed [7].

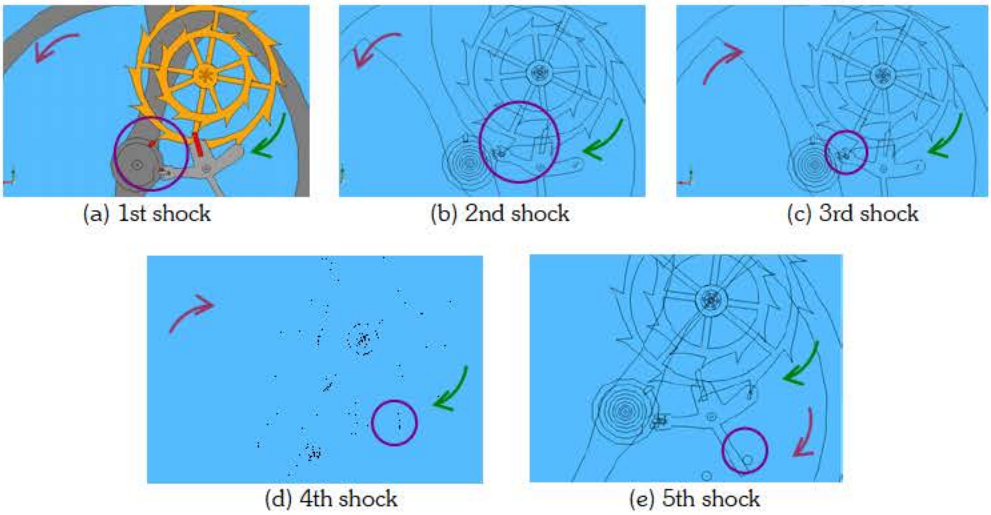

Fig. 13: The five shocks of Daniels Co-Axial Double-Wheel Escapement.

2.5 Website Design

Our virtual library of mechanical watch movement homepage is shown in Figure 14. It contains some CAD models about the four escapements presented in the previous sections, 3D animation video clips, as well as related information. It has two versions: English and Chinese. The website is accessible at the address below: http://www.ipe.cuhk.edu.hk/projects10_library.html.

Fig. 14: There are four escapement records available in the Virtual Library of Mechanical Watch Movements.

3. HOW TO BUILD THE VIRTUAL LIBRARY AND ITS APPLICATIONS

In this section, we present the process of building the virtual library and its applications through an example: the Graham Escapement.

3.1 Modelling of the Escapement Structure

Building the virtual library for the Graham Escapement takes several steps. Firstly, we identify the three main components of the Graham Escapement including the escape wheel, the pallet fork and the pendulum. Then we build

IPR2024-00765
Garmin EX1019 Page 8

the solid models of each component with the CAD software SolidWorks®. After that, all the components are put together in the assembly file according to the geometry as shown in Figure 15.

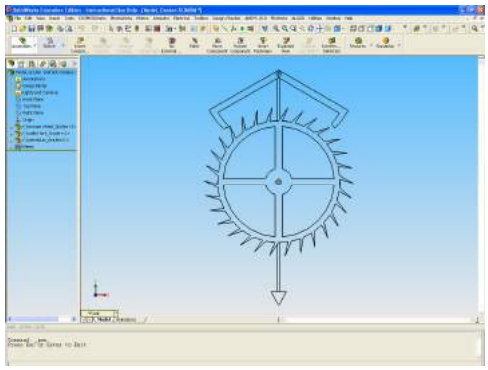

Fig. 15: The assembly diagram of Graham Escapement in SolidWorks®

After the solid model of escapement is done, the next step is studying the relationship between components. The simulation is done step by step (Figure 16). In each step, the escape wheel is rotated by a small angle, followed by the pallet fork and the pendulum. Note that the attention must be taken in dealing with the shocks, at which times, the escape wheel, the pallet fork and the pendulum may change their motion, velocity and acceleration. The details of the change can be found in [7].

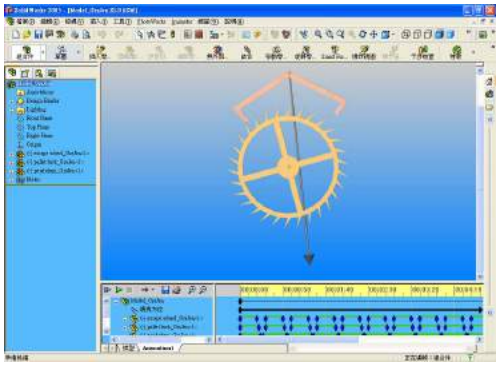

Fig. 16: The animation setting interface in SolidWorks® with the Graham Escapement.

After the animation of movements is finished, it would be uploaded to the Virtual Library on the website.

3.2 An Application

The virtual library is a multi-functional tool that benefits many users. First, it can be used as an educational tool for mechanical engineering students and vocational school students who wish to study different kinds of mechanical watch movements. Second, it acts as an online library for general public to search information about escapements and some well-known horologists. Last but not the least, it helps watchmaker to diagnose the design and assembly error when building a mechanical watch movement. Recently, we receive an inquiry from a clock manufacturing company on validate their design. Using the data they provided, we constructed a 3D CAD as shown in Figure 17. Then, we run a simulation step by step to visualize the operation of the design. We also analyze the effect of the manufacturing / assembly tolerance.

IPR2024-00765
Garmin EX1019 Page 9

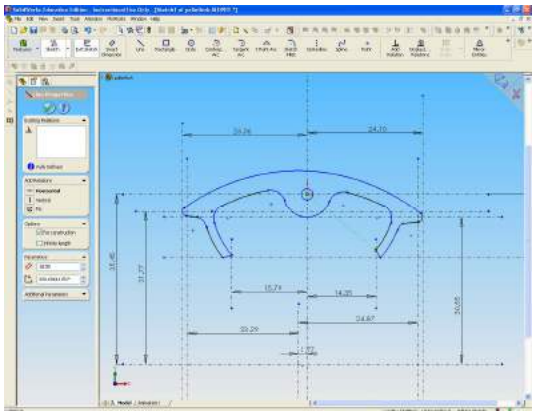

(a) Draft of pallet fork

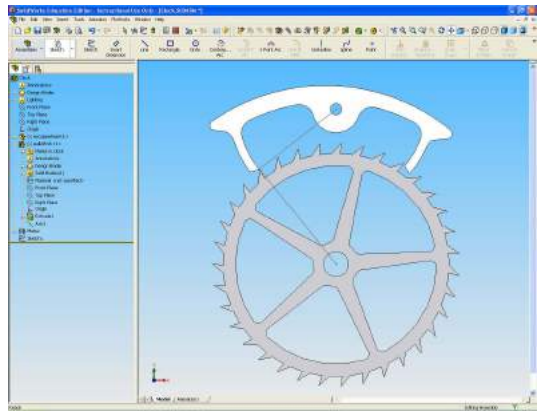

(b) Assembly diagram with two black lines showing the relevant distance between components

Fig. 17: Converting the construction blueprint into a CAD animation in SolidWorks®

4. CONCLUSIONS AND FUTURE WORK

Mechanical watch movement is a complicated mechanical device. In order to help the engineering professionals and general publics to understand its working principle and find the related information, we develop a virtual library. Presently, the library consists of four different kinds of escapements: the Graham escapement, the English lever escapement, the Swiss lever escapement and the Daniels co-axial double-wheel escapement. For each escapement, detailed information is given, including the invention background, the 3D solid models, the video clips and the explanation of the working principle.

The future work will include:
(1). Adding more escapements, such as the Brocot escapement, the Tic-Tac escapement, the Glashuetten Lever Escapement, the Muller escapement, the spring detent escapement, the Denison escapement, the Haldmann escapement, the Strasser escapement and etc.
(2). Developing an interface so that users interactively manipulate the 3D models and the animation.

5. REFERENCES

[1] The Swiss Watch Industry – Swiss News 2006, http://www.fhs.ch/en/news/.
[2] Volker Vyskocil Klostergass, Clock-Watch: History and Technique of Clocks and Watches, http://www.clockwatch.de.
[3] Headrick, M. V.: Clock and Watch Escapement Mechanics, 1997, http://www.geocities.com/mvhw/.
[4] Headrick, M. V.: Origin and Evolution of the Anchor Clock Escapement, IEEE Control Systems Magazine, April 2002.
[5] Ozdoba, C.: A Brief History of Precision Timekeeping – Part2: The 18th Century, http://www.ozdoba.net/swisswatch/history_part2.html.
[6] Omega Company official webpage, http://www.omegawatches.com/index.php?id=332.
[7] Daniels, G.: Watchmaking, Sotheby's Publications, 1981.

IPR2024-00765
Garmin EX1019 Page 10