US006614560B1

(12) **United States Patent**
Silverbrook

(10) **Patent No.: US 6,614,560 B1**
(45) **Date of Patent: Sep. 2, 2003**

(54) **INTEGRATED CAMERA CIRCUIT INCLUDING IMAGE SENSOR, IMAGE PROCESSING, AND PRINTER DRIVE CIRCUITS**

(75) Inventor: **Kia Silverbrook**, Sydney (AU)

(73) Assignee: **Silverbrook Research Pty Ltd**, Balmain (AU)

(*) Notice: Subject to any disclaimer, the term of this patent is extended or adjusted under 35 U.S.C. 154(b) by 0 days.

(21) Appl. No.: **09/113,104**

(22) Filed: **Jul. 10, 1998**

(30) **Foreign Application Priority Data**

Jul. 15, 1997 (AU) PO7991
Dec. 12, 1997 (AU) PP0887

(51) **Int. Cl.**[7] **H04N 1/40**
(52) **U.S. Cl.** **358/443**; 358/456; 358/474; 358/909.1; 348/222; 348/294
(58) **Field of Search** 358/443, 456, 358/474, 482, 906, 909.1; 348/207, 222, 294, 308

(56) **References Cited**

U.S. PATENT DOCUMENTS

5,883,830 A * 3/1999 Hirt et al. 348/294
6,163,338 A * 12/2000 Johnson et al. 348/148

* cited by examiner

Primary Examiner—Thomas D. Lee

(57) **ABSTRACT**

A camera system is disclosed comprising an image sensor and processing device for sensing and processing an image; a print media supply means provided for the storage of print media; a print head for printing the sensed image on print media stored internally to the camera system; the image sensor and processing device comprising a single integrated circuit chip including the following interconnected components: a processing unit for controlling the operation of the camera system; a program ROM utilized by the processing unit; a CMOS active pixel image sensor for sensing the image; a memory store for storing images and associated program data; a series of motor drive units each including motor drive transistors for the driving of external mechanical system of the camera system; and print head interface unit for driving the print head for printing of the sensed image. Preferably, the motor drive transistors are located along one peripheral edge of the integrated circuit and the CMOS pixel image sensor is located along an opposite edge of the integrated circuit.

5 Claims, 23 Drawing Sheets

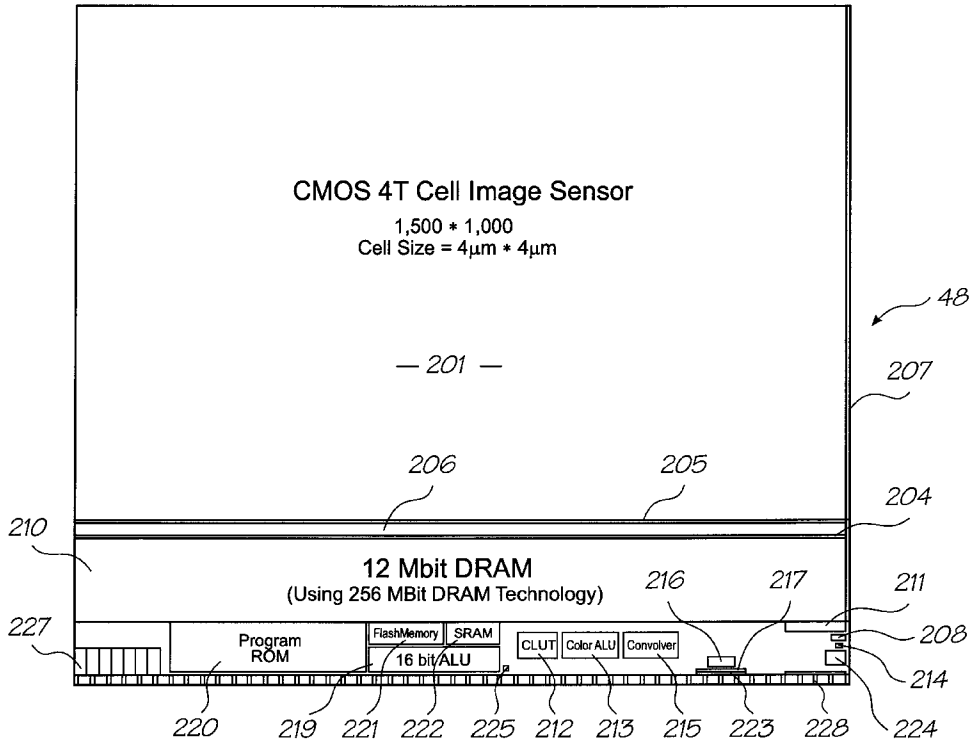

TI 1042

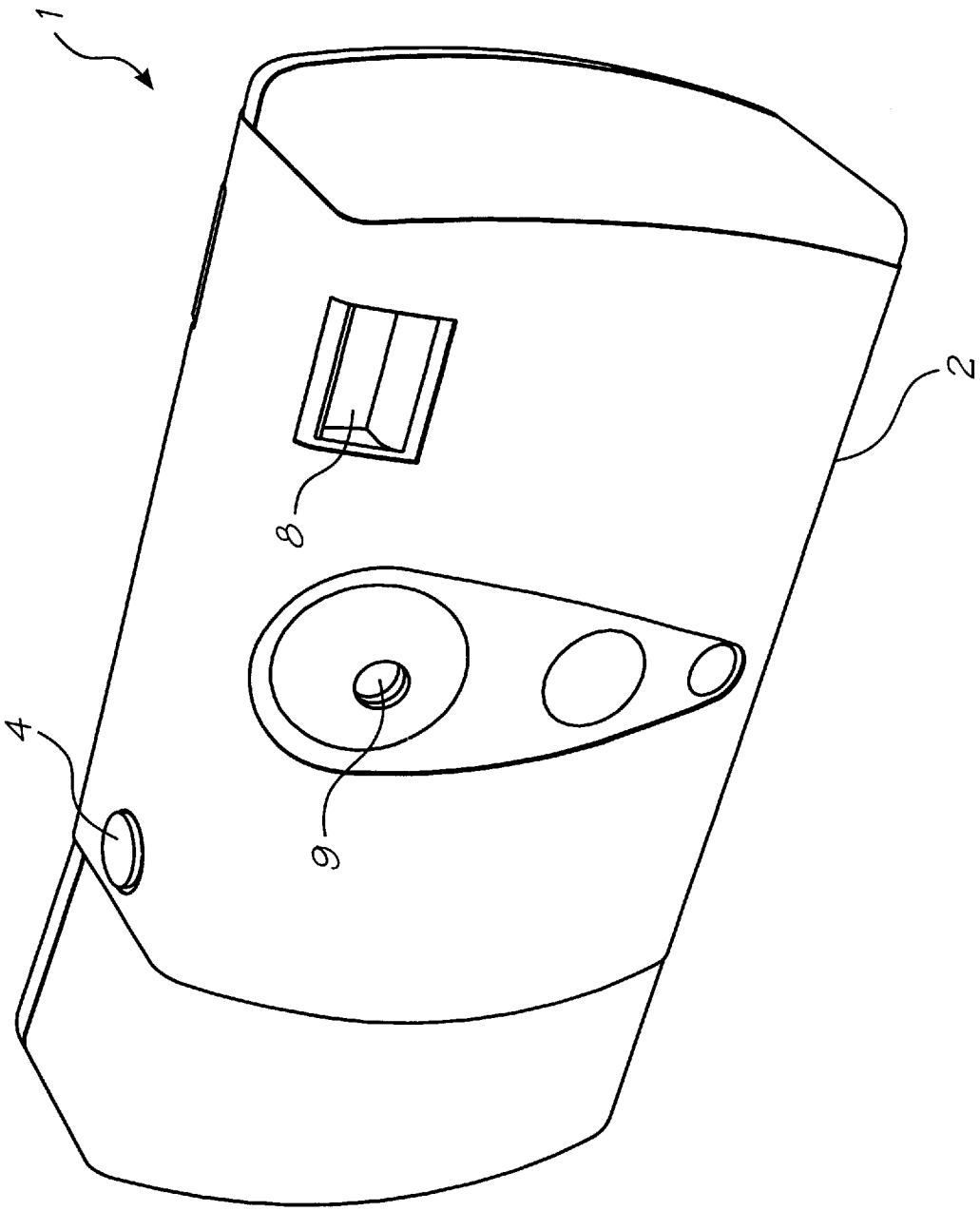

FIG. 1

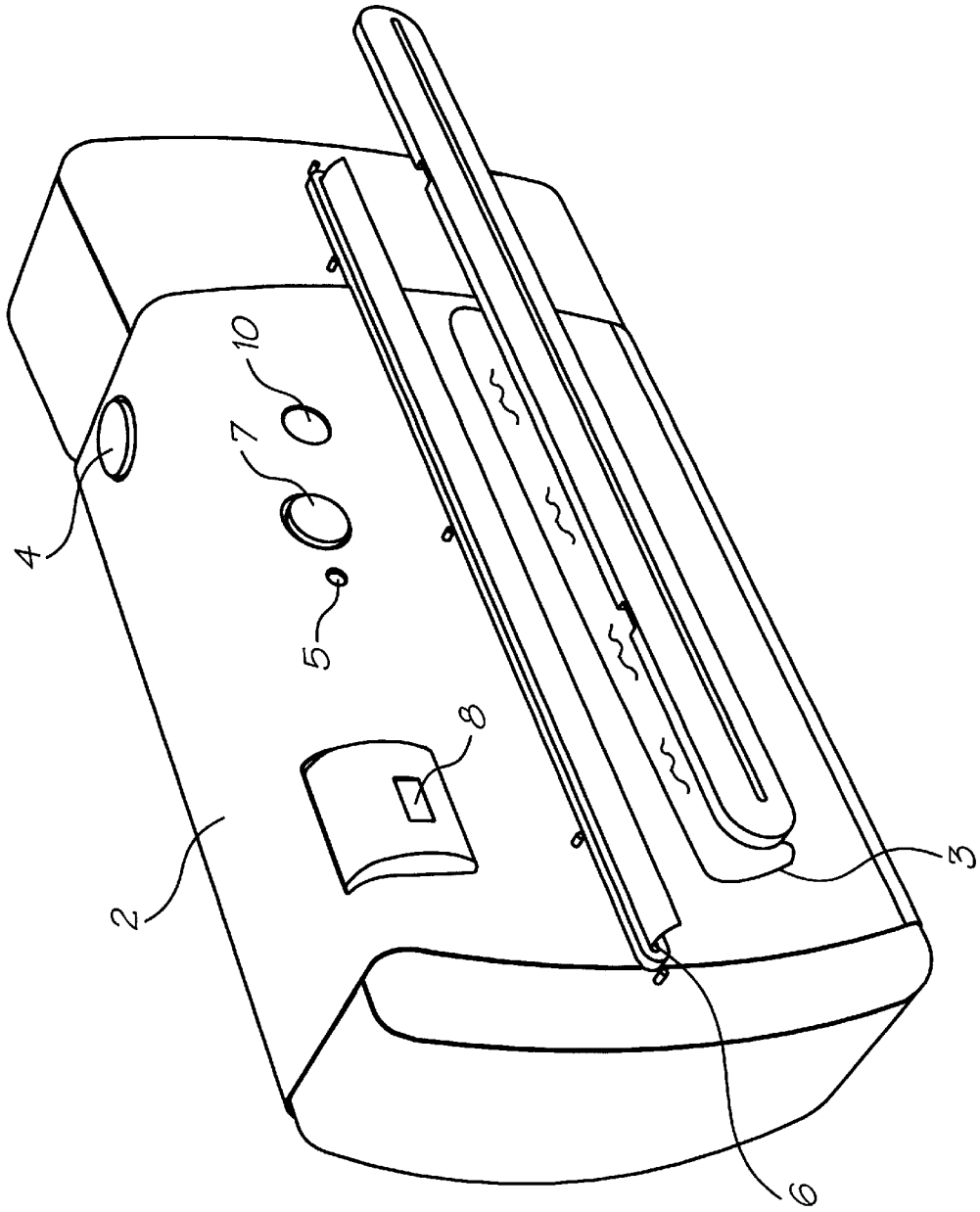

FIG. 2

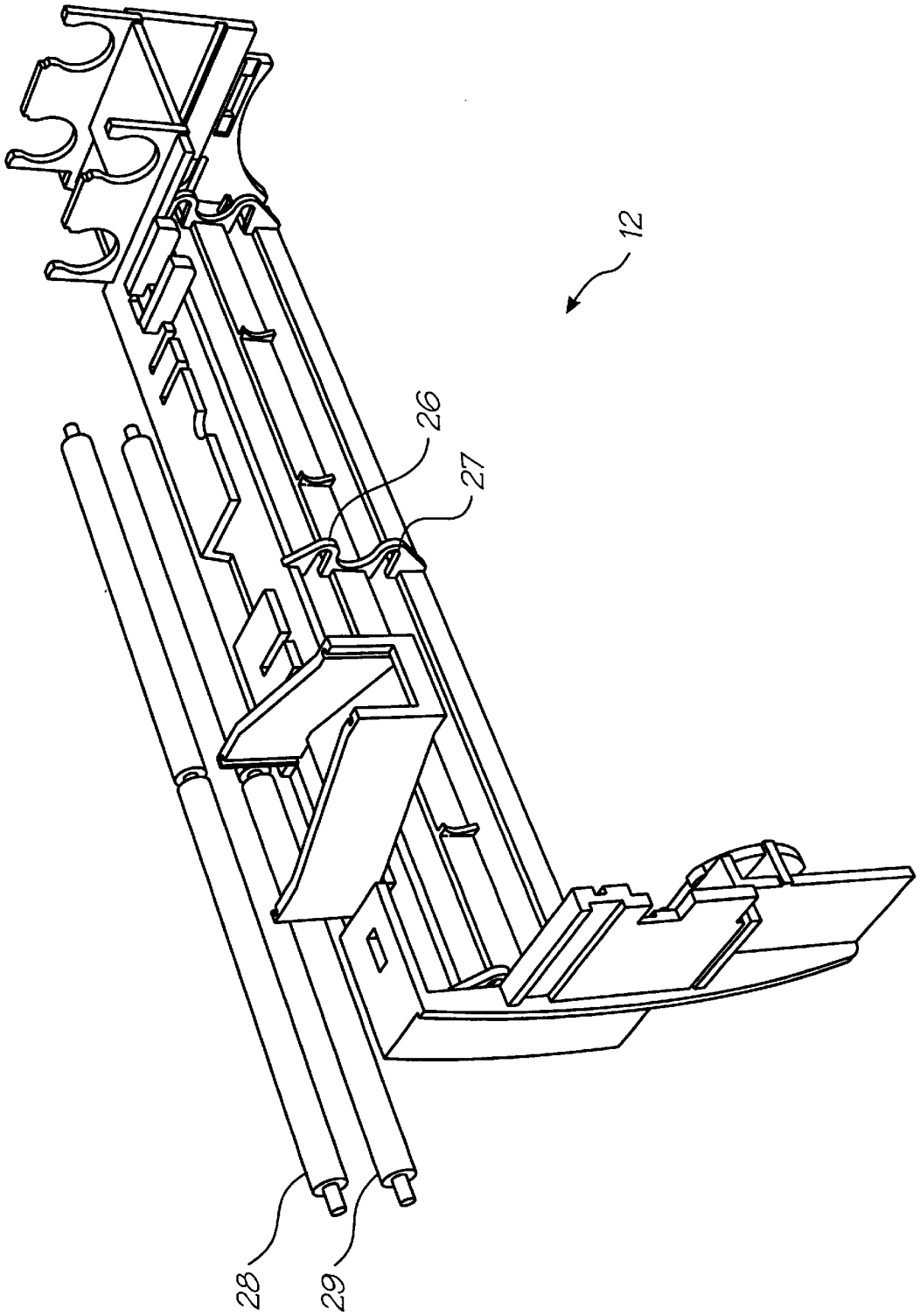

FIG. 3

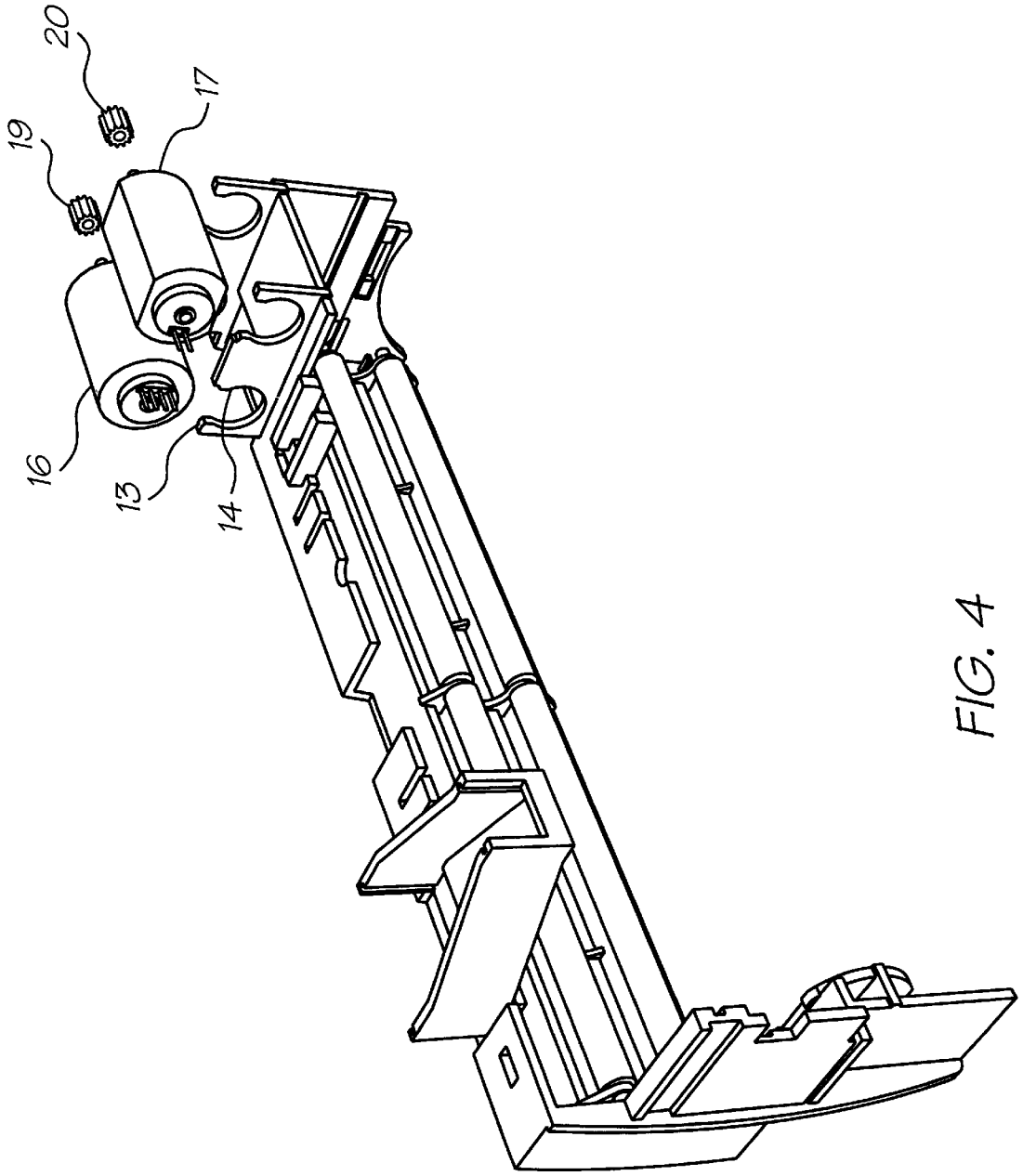

FIG. 4

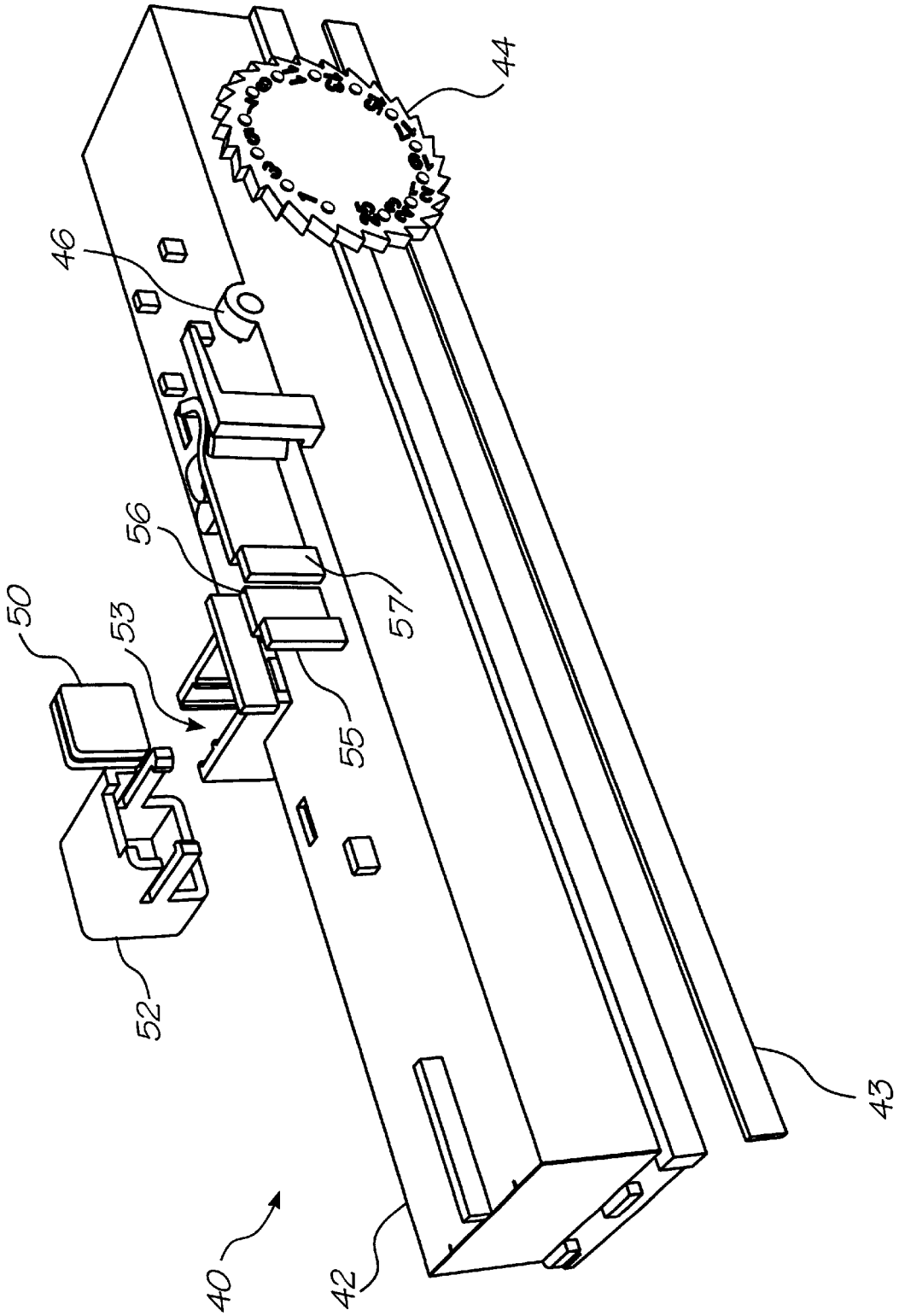

FIG. 5

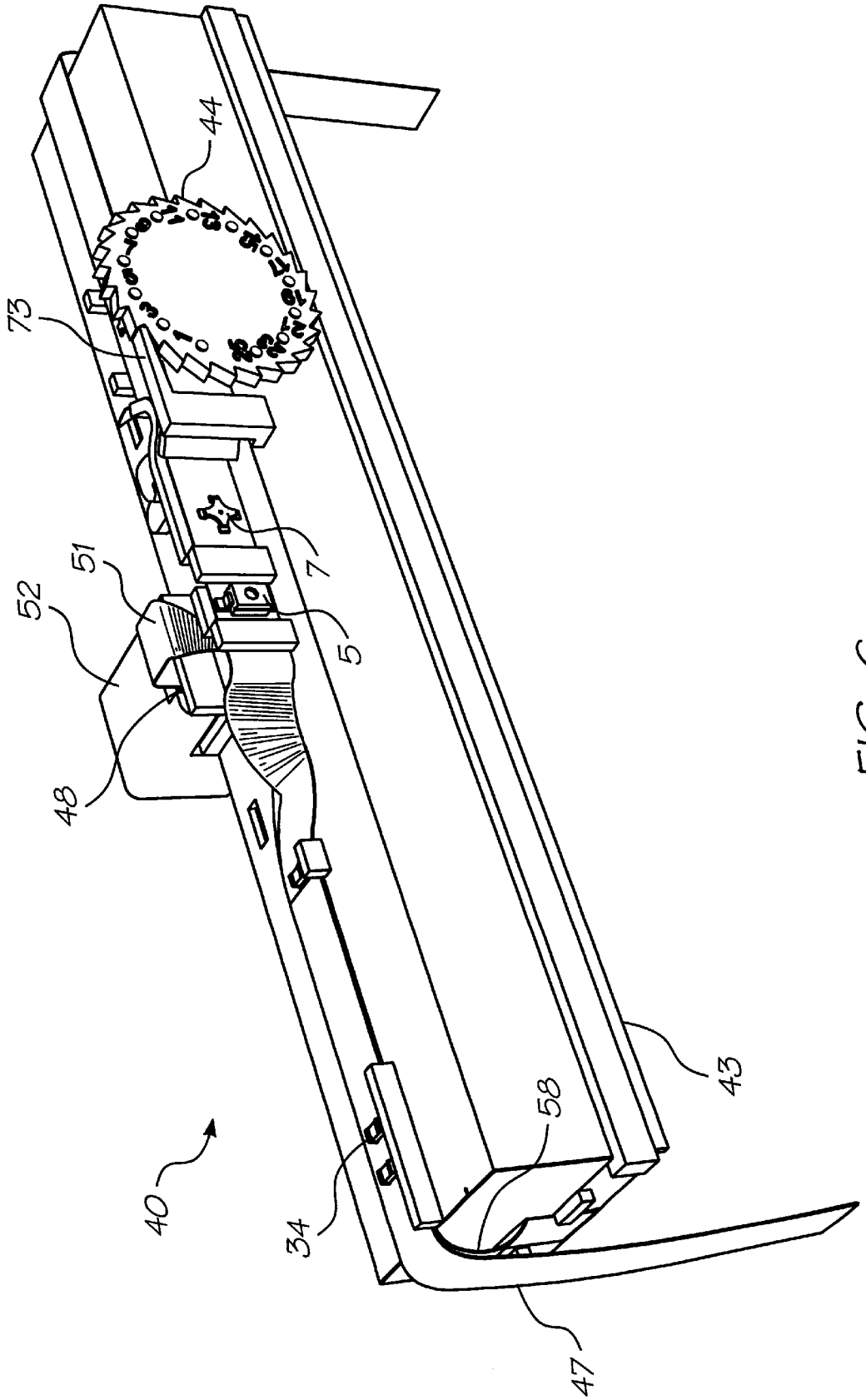

FIG. 6

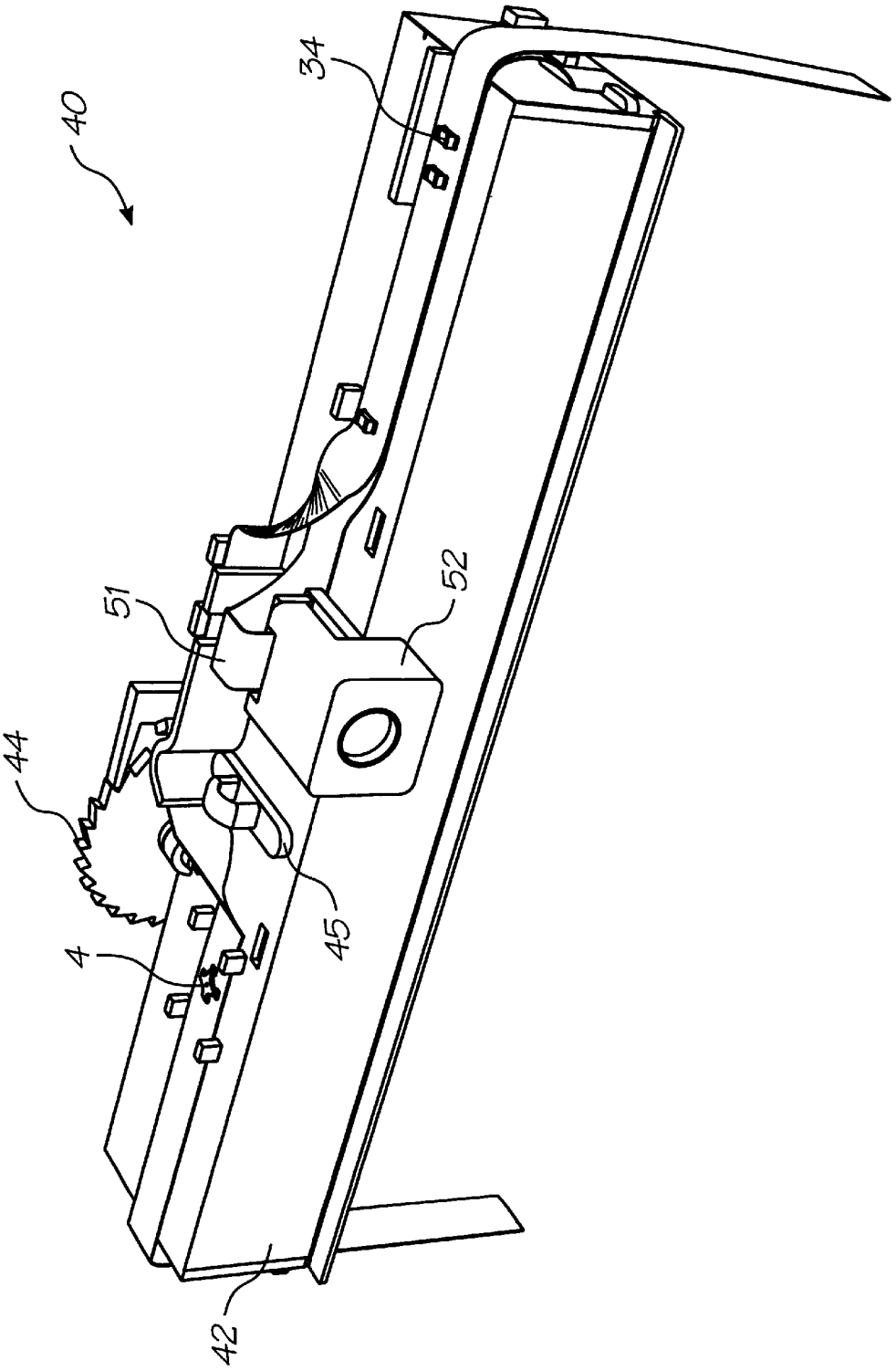

FIG. 7

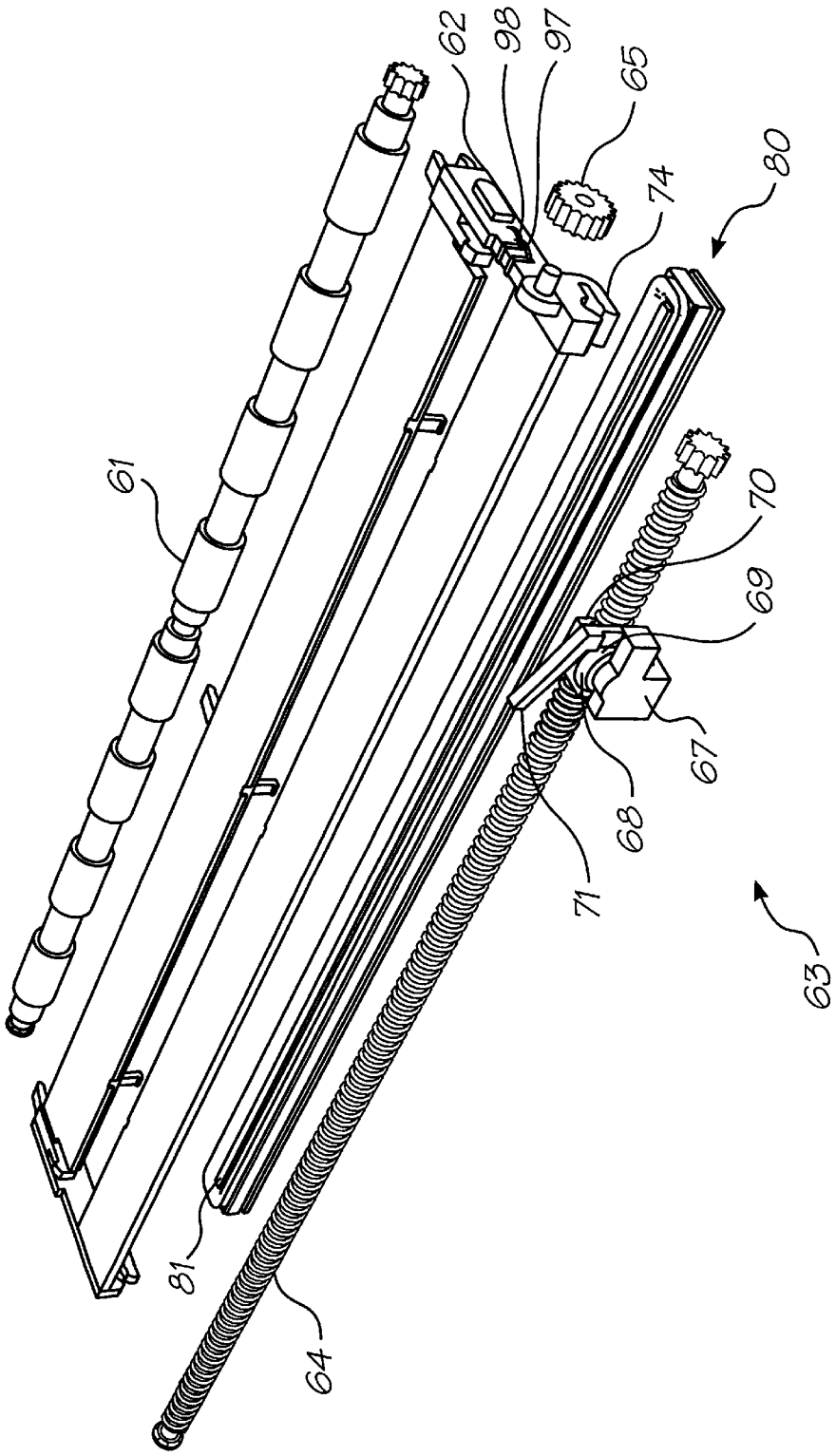

FIG. 8

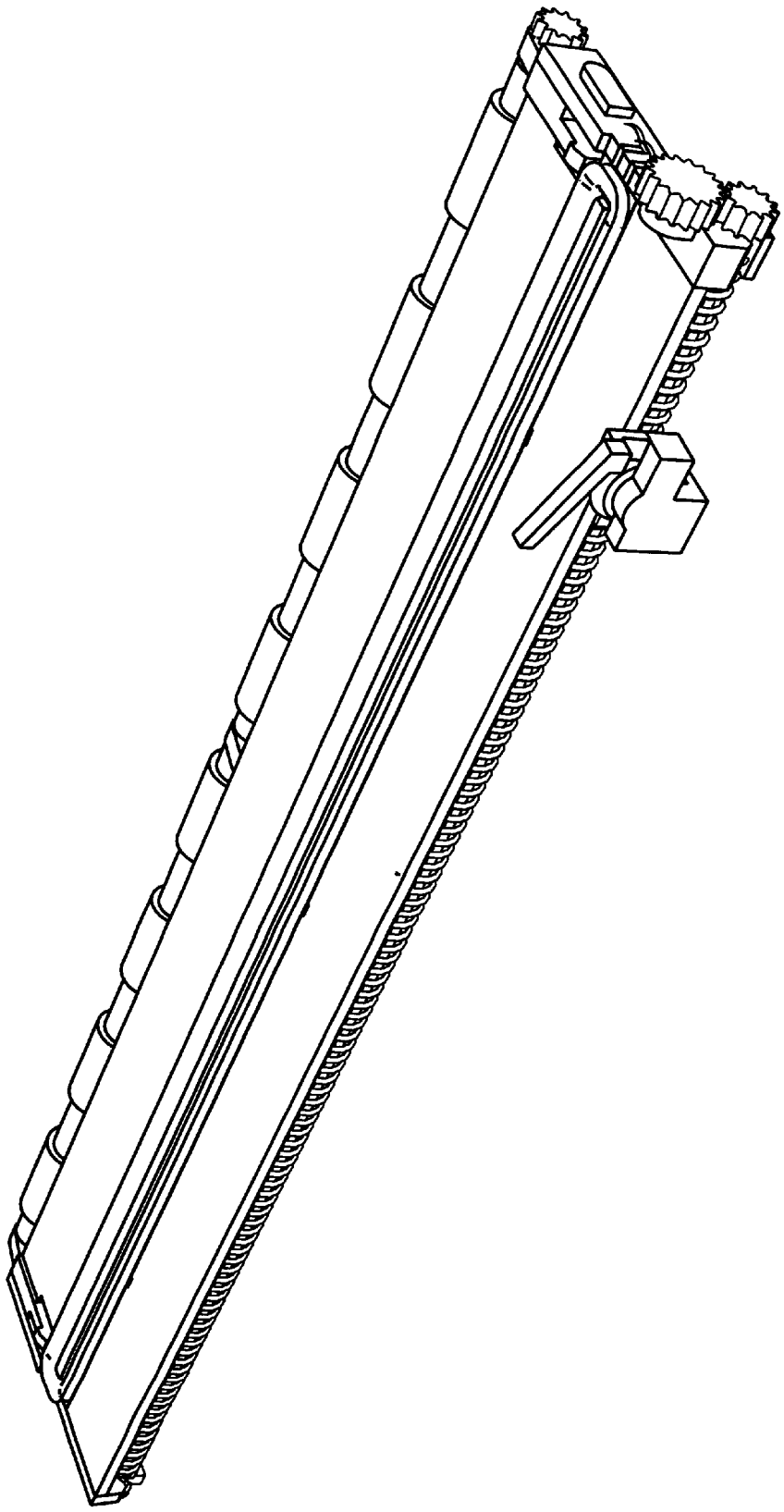

FIG. 9

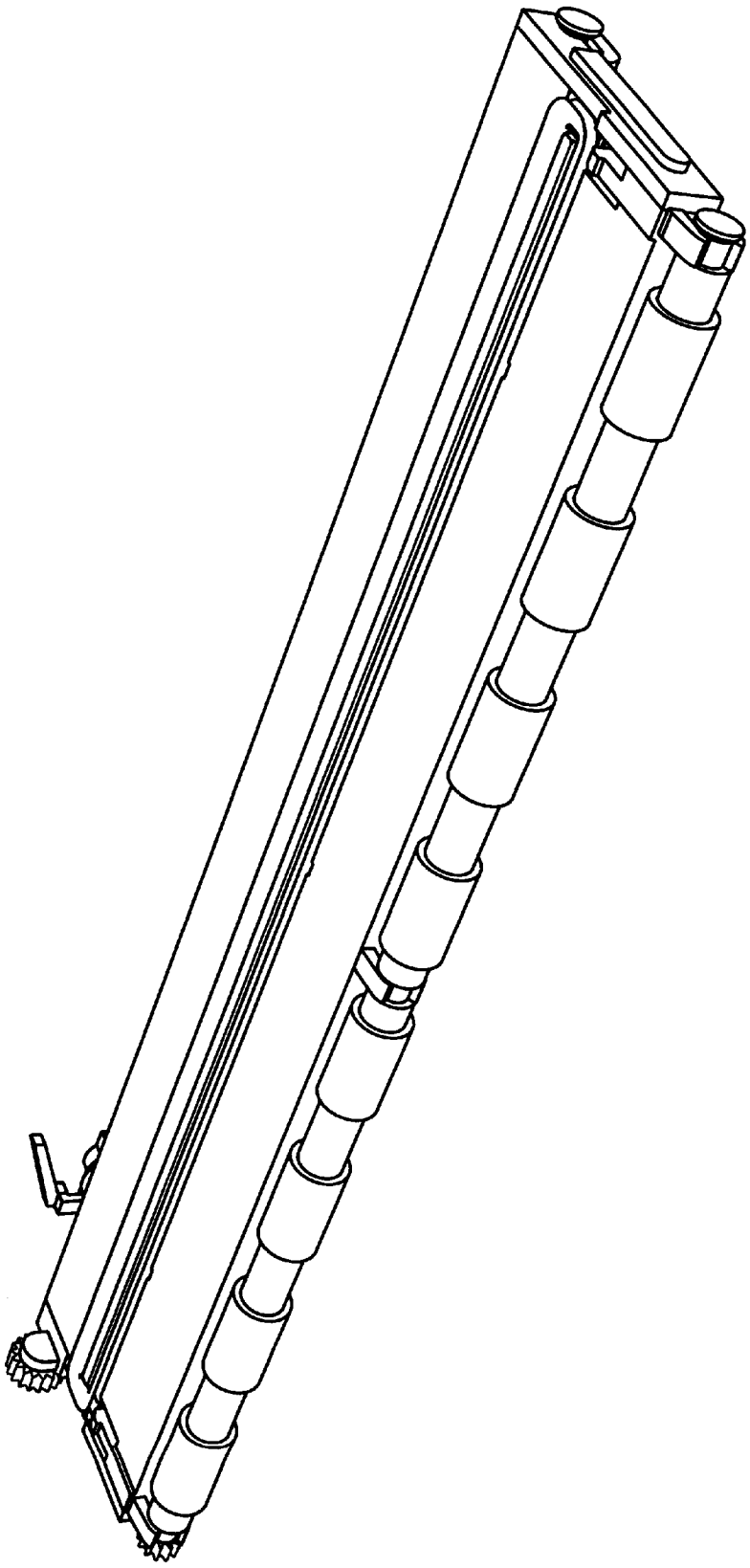

FIG. 10

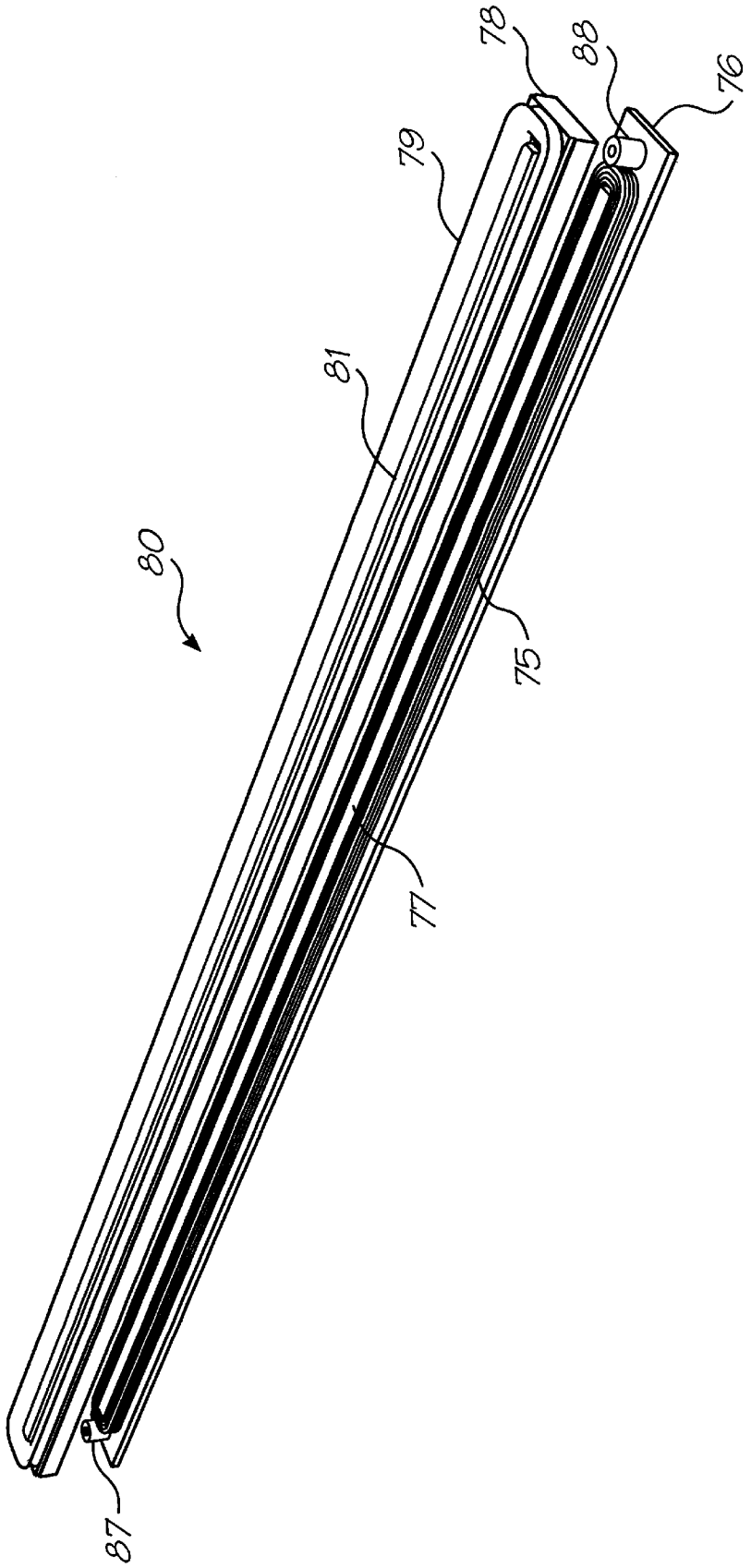

FIG. 11

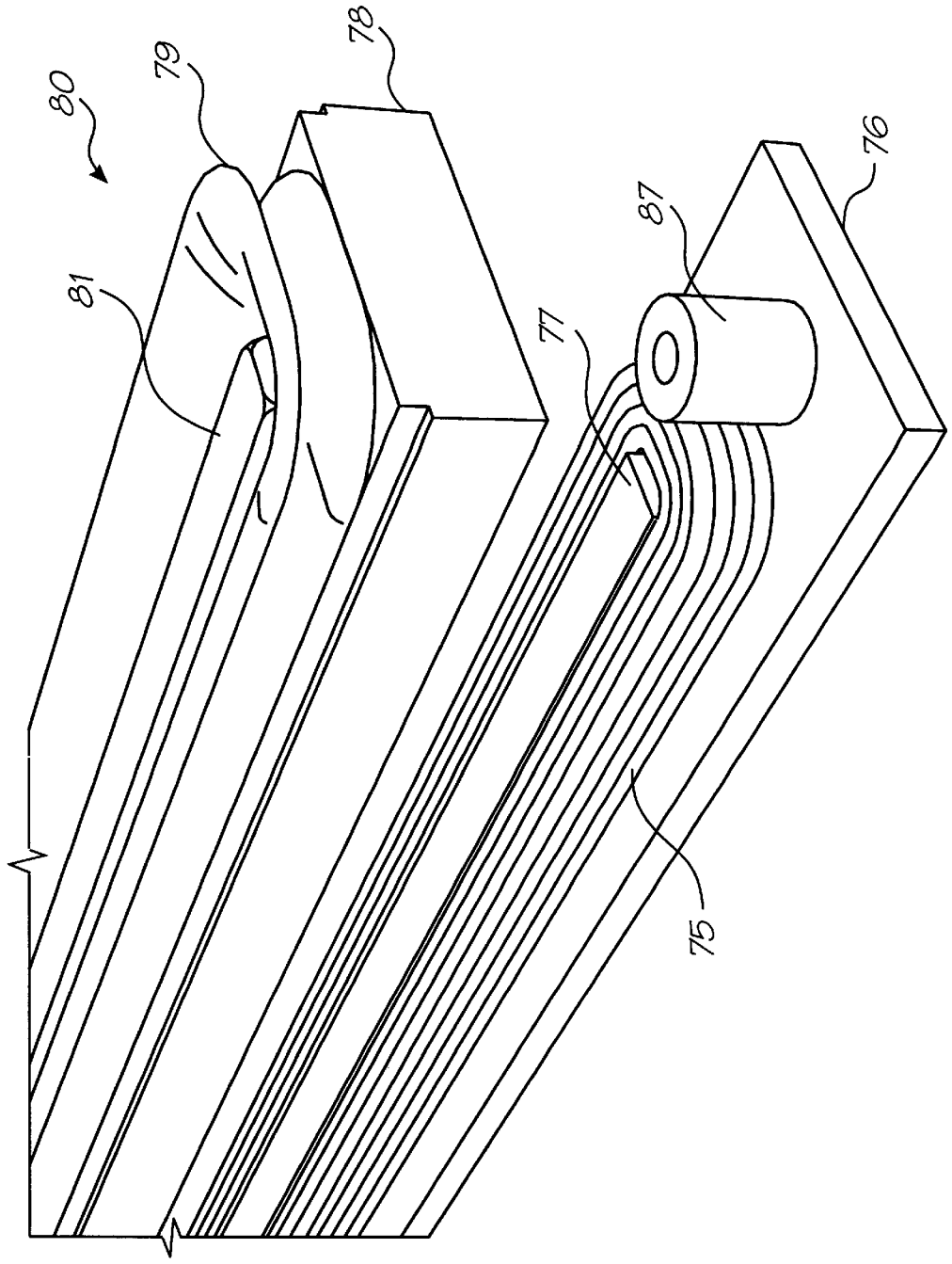

FIG. 12

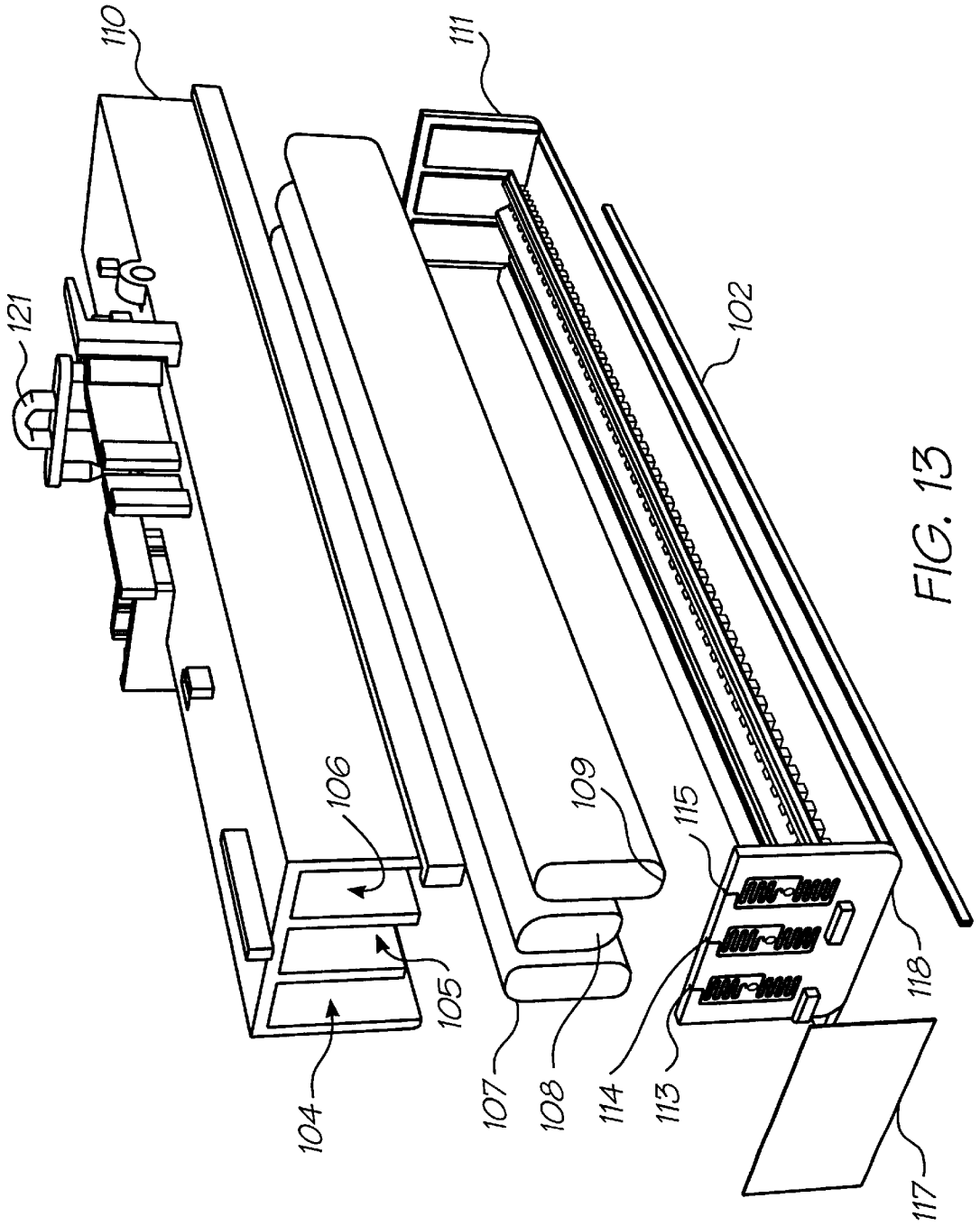

FIG. 13

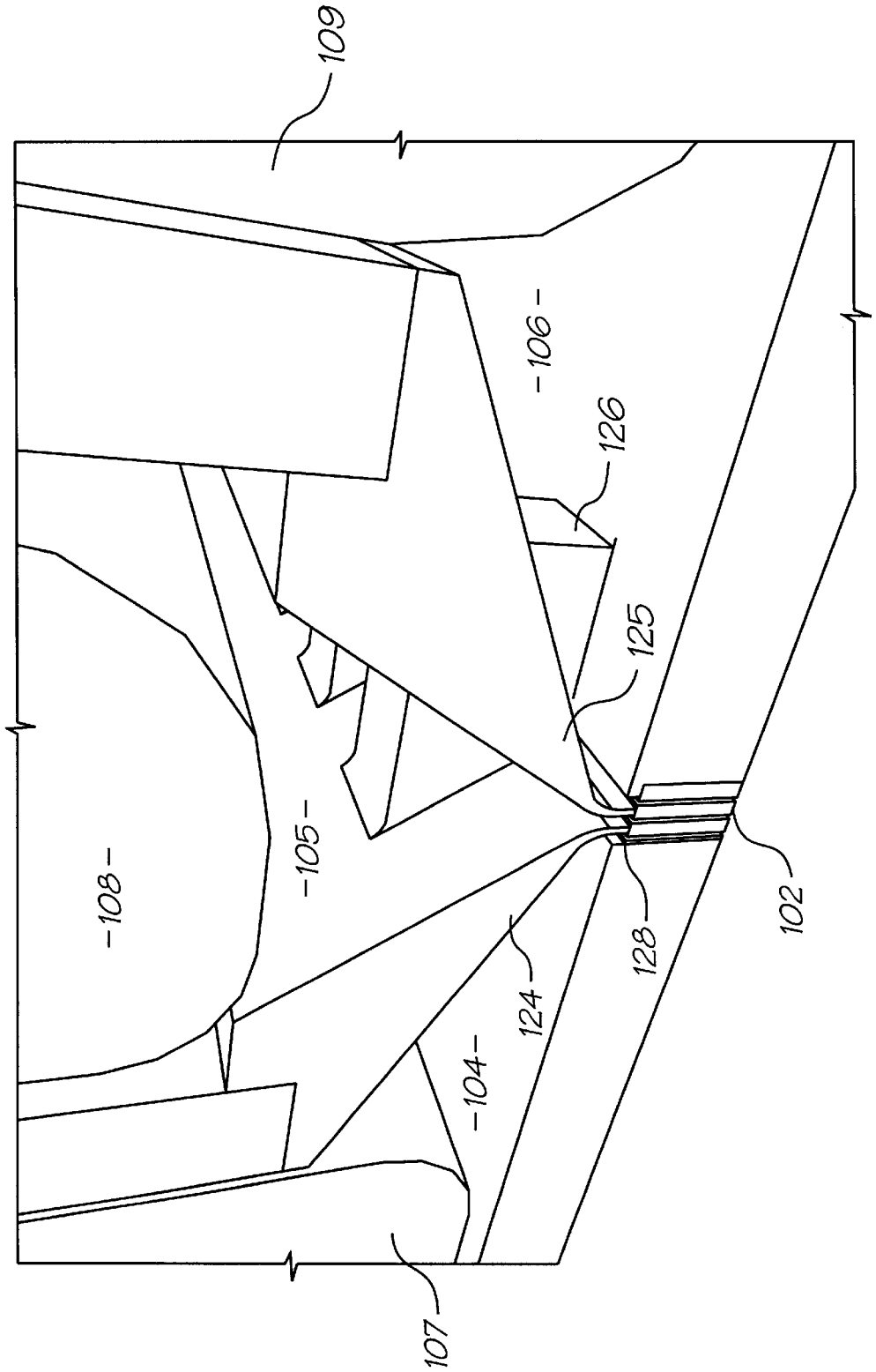

FIG. 14

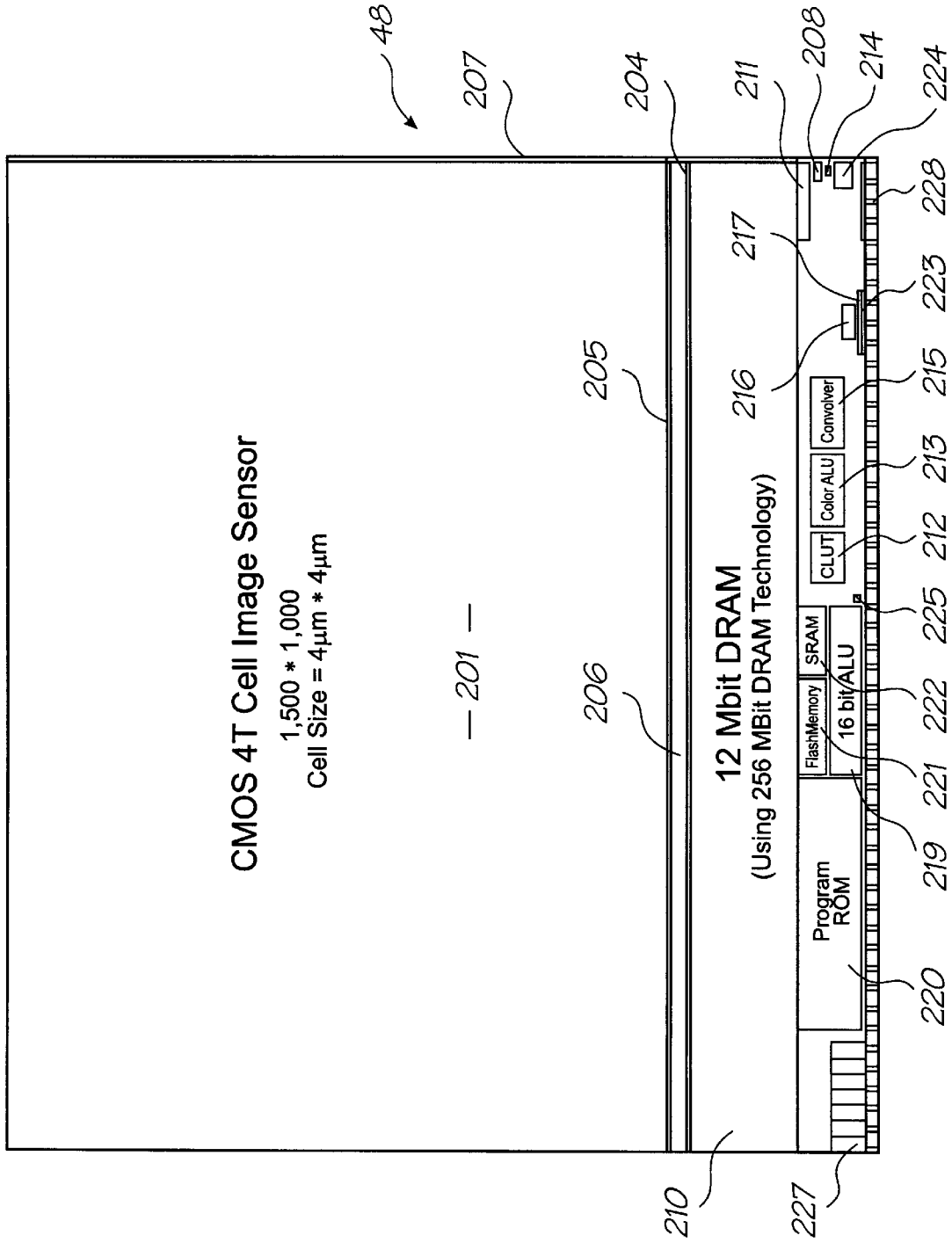
48
207
204
211
208
214
224
228
223
215
213
212
225
222
221
219
220
227
210
206
205
216
217
CMOS 4T Cell Image Sensor
1,500 * 1,000
Cell Size = 4μm * 4μm
201
12 Mbit DRAM
(Using 256 MBit DRAM Technology)
Program ROM
FlashMemory
SRAM
16 bit ALU
CLUT
Color ALU
Convolver

FIG. 15

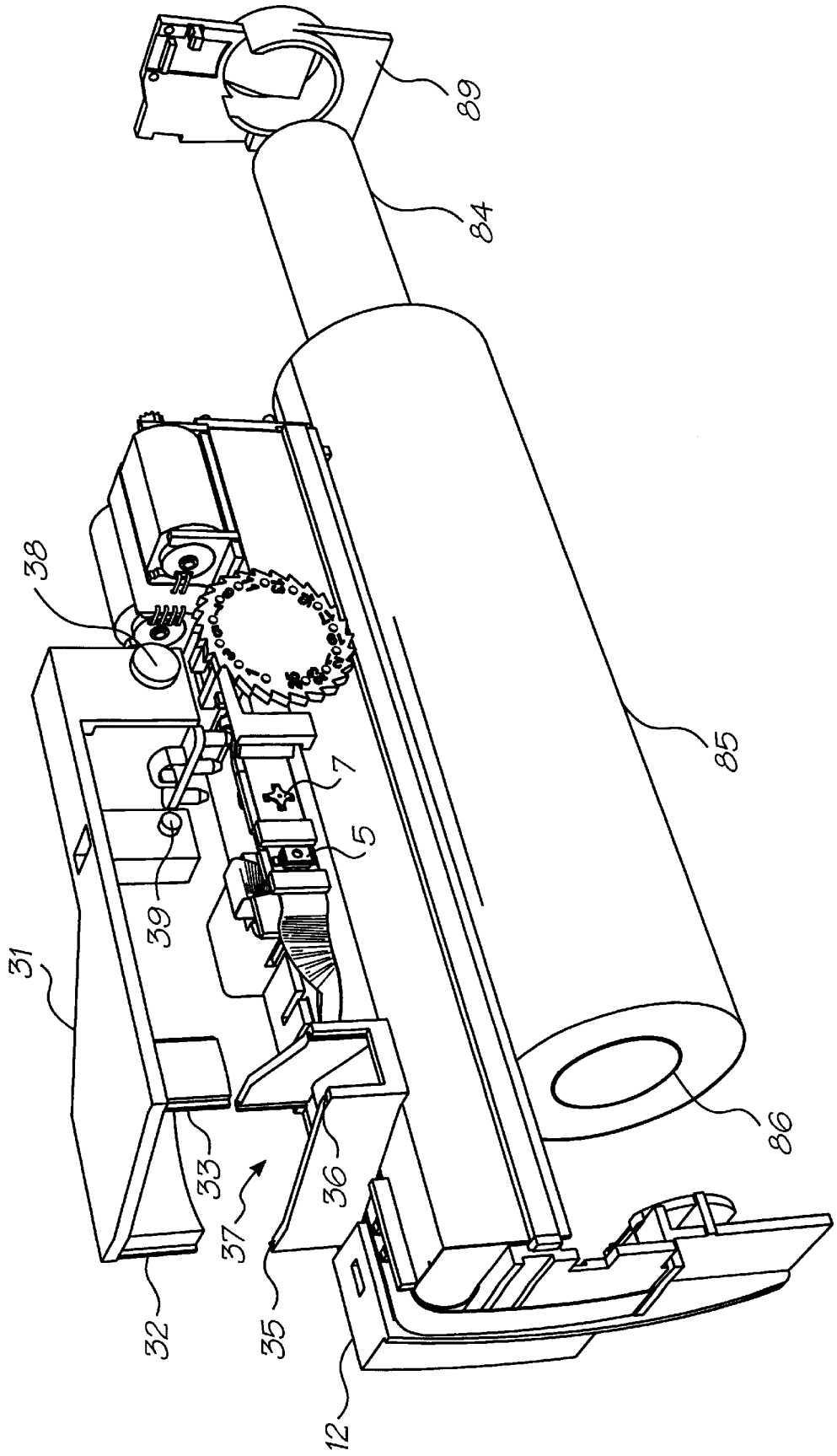

FIG. 16

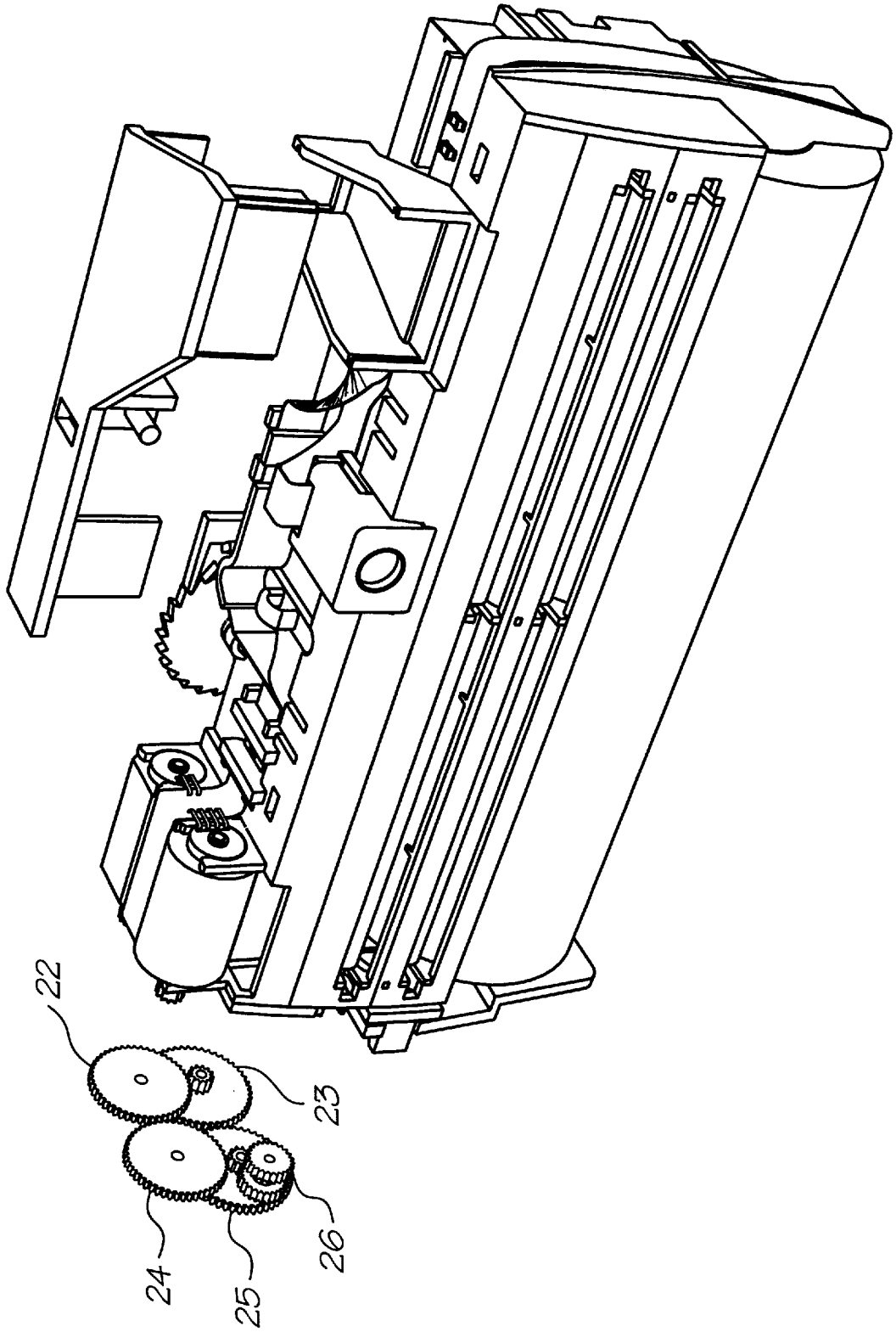

FIG. 17

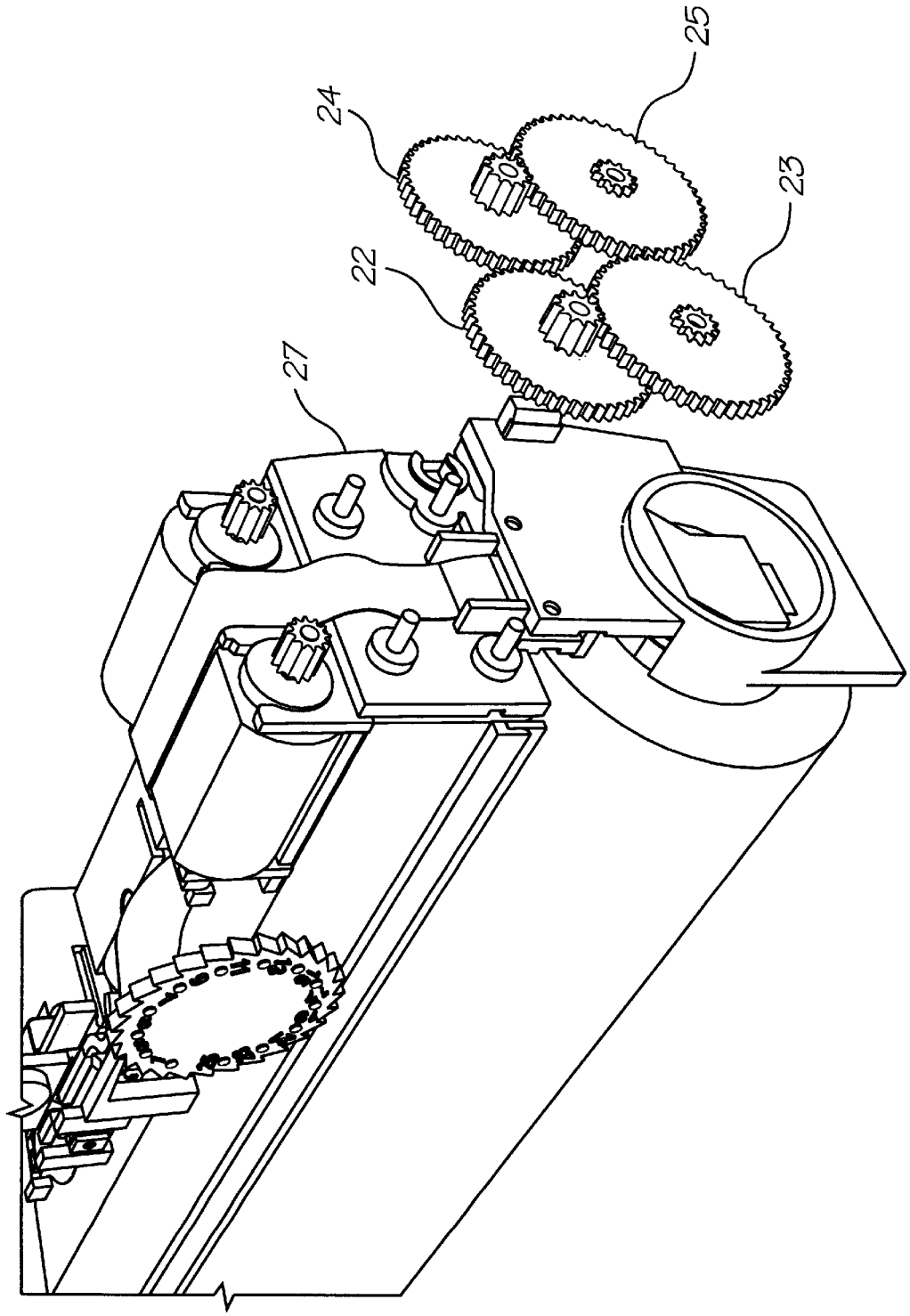

FIG. 18

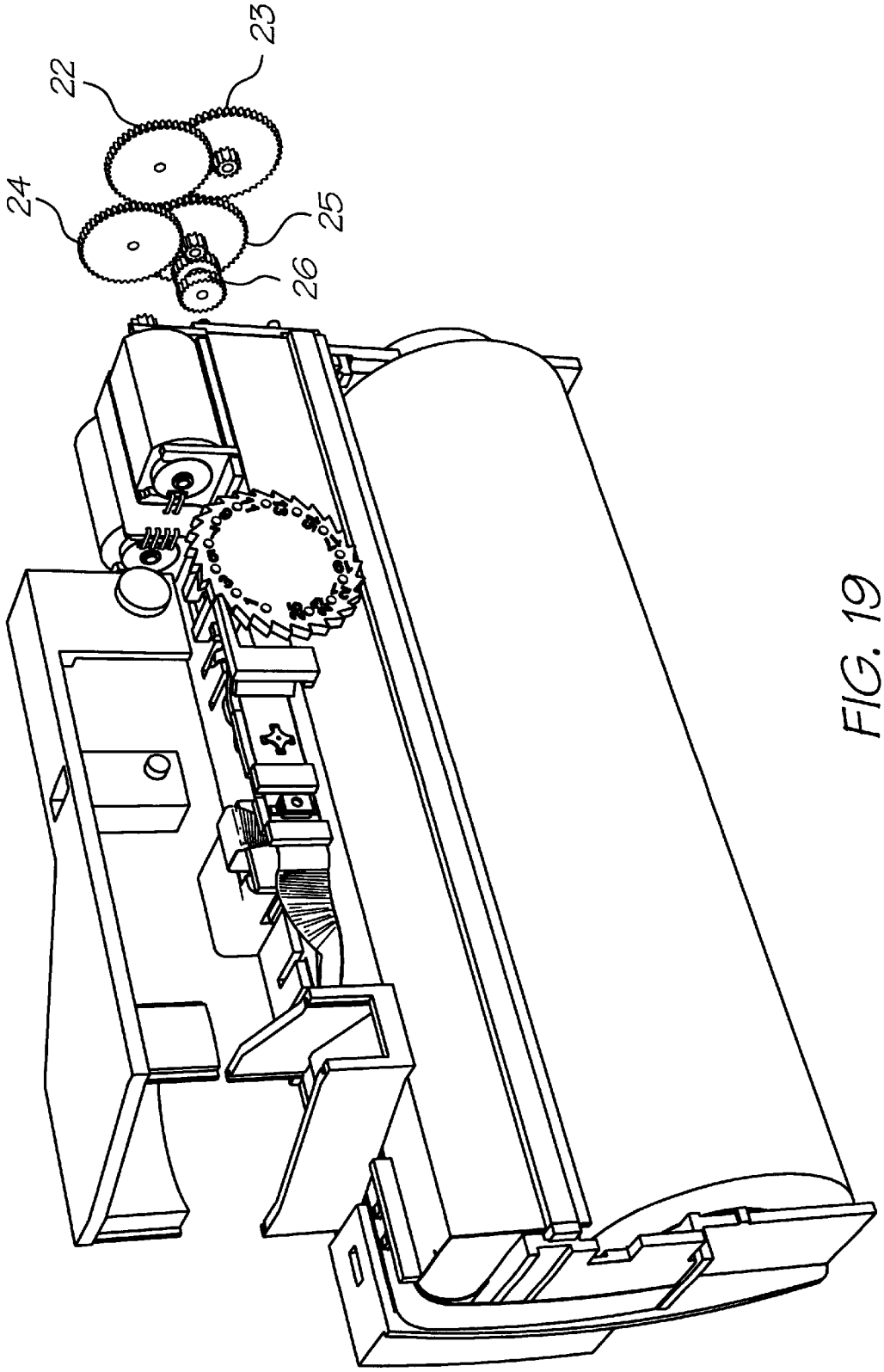

FIG. 19

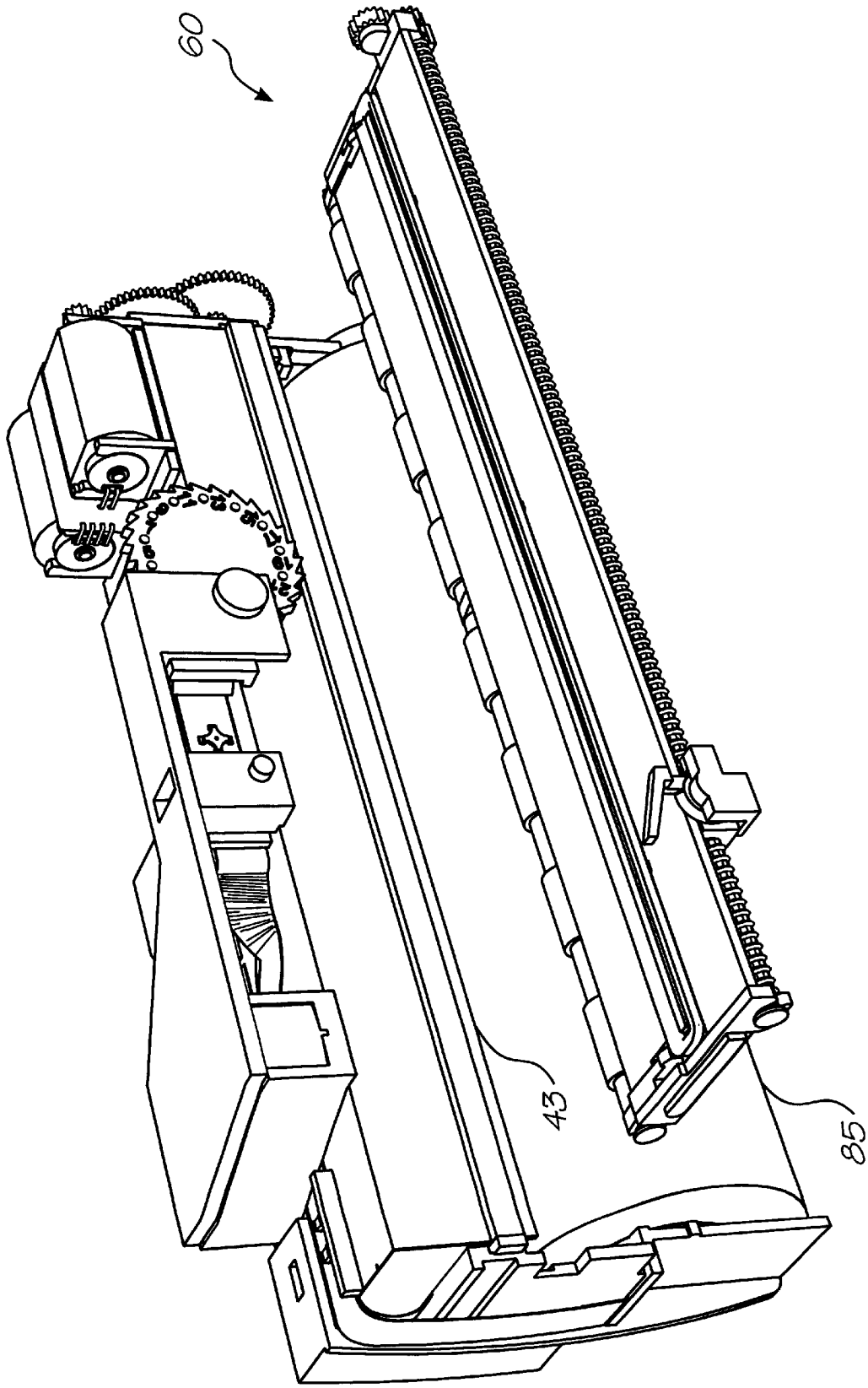

FIG. 20

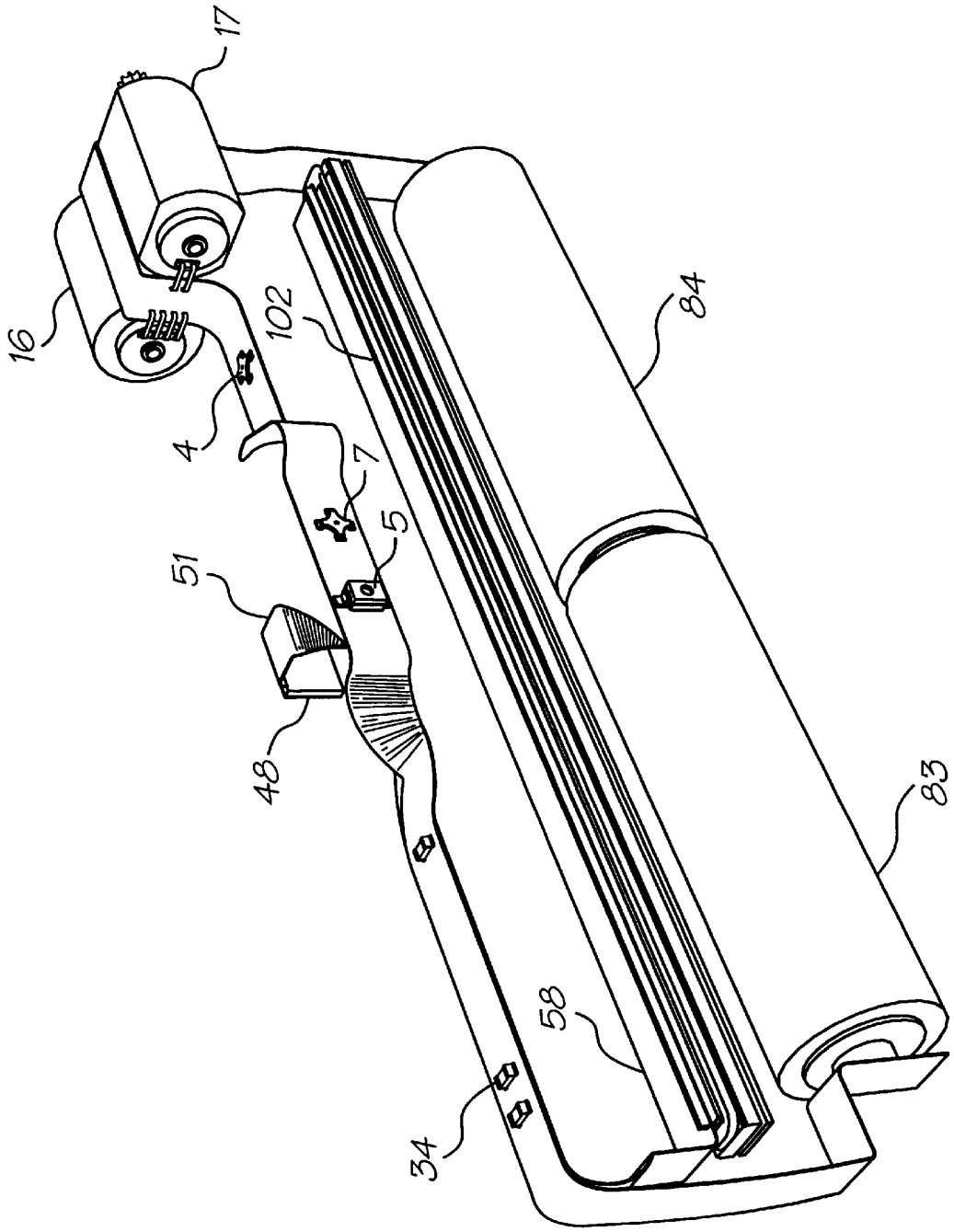

FIG. 21

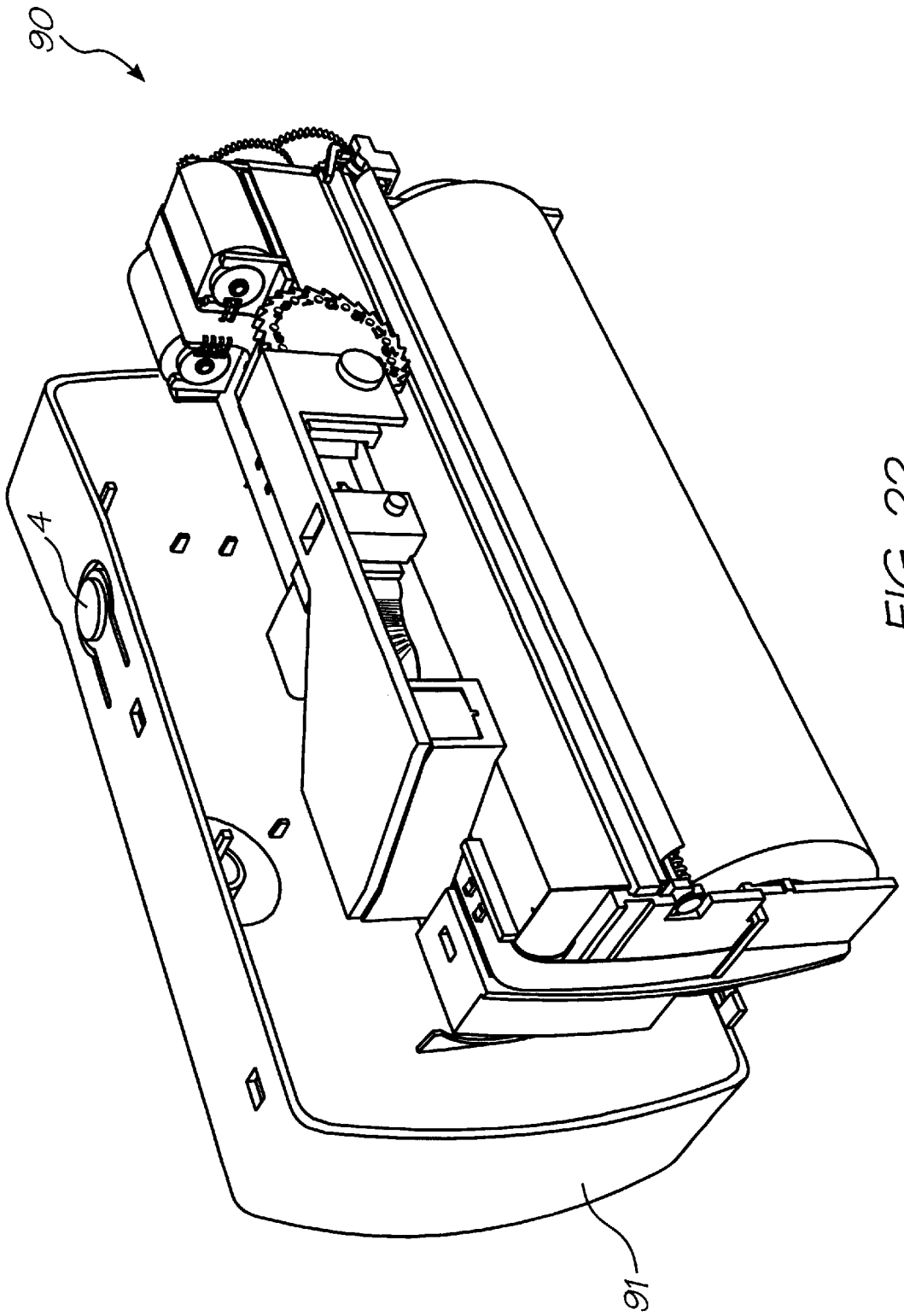

FIG. 22

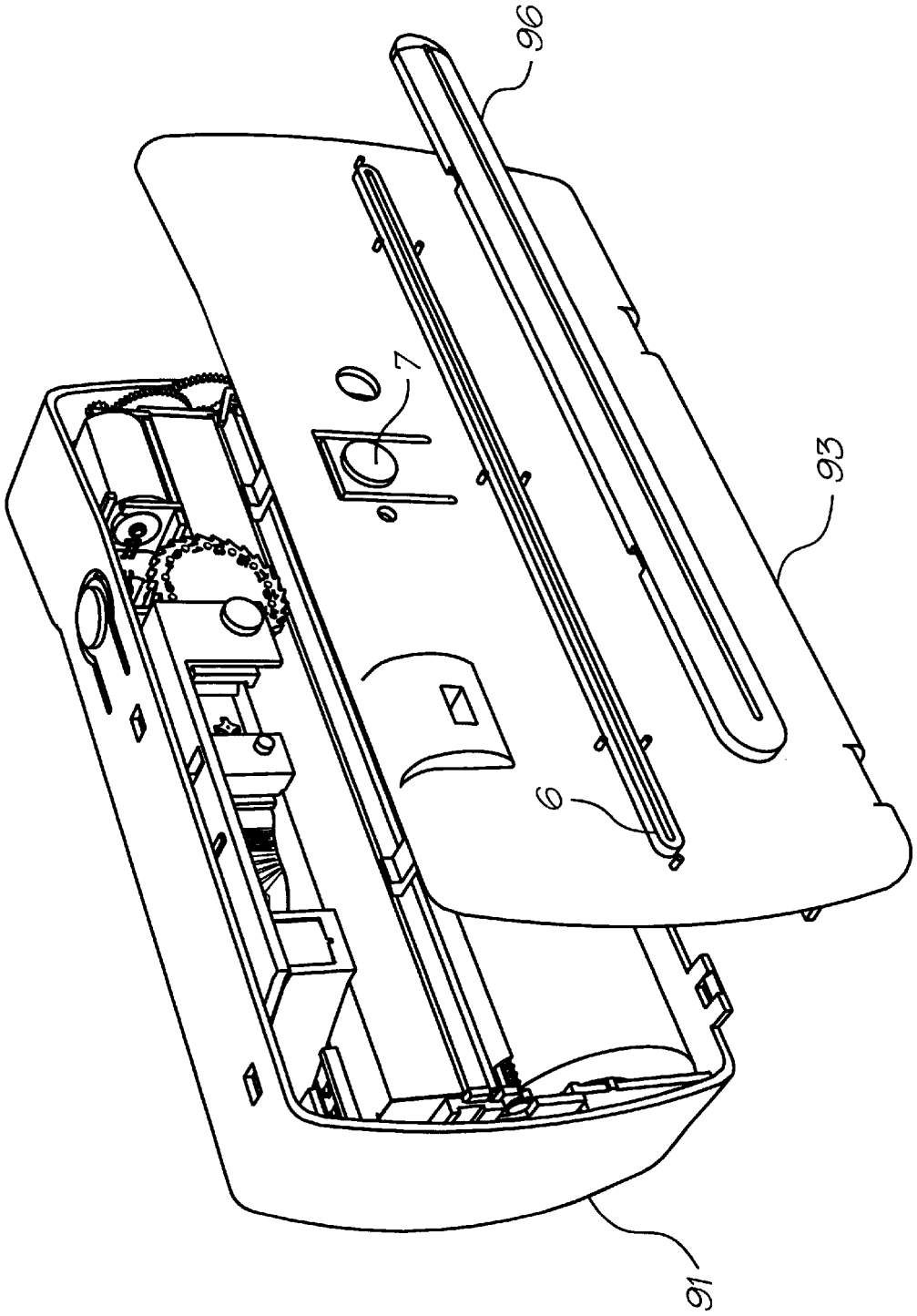

FIG. 23

INTEGRATED CAMERA CIRCUIT INCLUDING IMAGE SENSOR, IMAGE PROCESSING, AND PRINTER DRIVE CIRCUITS

FILED OF THE INVENTION

The present relates substantially to the concept of a disposable camera having instant printing capabilities and in particular, discloses An Integrated Camera Circuit including Sensor and Drive Transistors.

CROSS REFERENCES TO RELATED APPLICATIONS

The following Australian provisional patent applications are hereby incorporated by cross-reference. For the purposes of location and identification, US patent applications, identified by their US patent application serial numbers (USSN) are listed alongside the Australian applications from which the US patent applications claim the right of priority.

BACKGROUND OF THE INVENTION

Recently, the concept of a "single use" disposable camera has become an increasingly popular consumer item. Disposable camera systems presently on the market normally include an internal film roll and a simplified gearing mechanism for traversing the film roll across an imaging system including a shutter and lensing system. The user, after utilising a single film roll returns the camera system to a film development centre for processing. The film roll is taken out of the camera system and processed and the prints returned to the user. The camera system is then able to be re-manufactured through the insertion of a new film roll into the camera system, the replacement of any worn or wearable parts and the re-packaging of the camera system in accordance with requirements. In this way, the concept of a single use "disposable" camera is provided to the consumer.

Recently, a camera system has been proposed by the present applicant which provides for a handheld camera device having an internal print head, image sensor and processing means such that images sense by the image sensing means, are processed by the processing means and adapted to be instantly printed out by the printing means on demand. The proposed camera system further discloses a system of internal "print rolls" carrying print media such as film on to which images are to be printed in addition to ink to supplying the printing means for the printing process. The print roll is further disclosed to be detachable and replaceable within the camera system.

Unfortunately, such a system is likely to only be constructed at a substantial cost and it would be desirable to provide for a more inexpensive form of instant camera system which maintains a substantial number of the quality aspects of the aformentioned arrangement.

In particular, in any "disposable camera" it would be desirable to provide for a simple and rapid form of replenishment of the consumable portions in any disposable camera so that the disposable camera can be readily and rapidly serviced by replenishment and return to the market place.

It would be desirable to provide for an extremely low cost camera system having as great quality as possible. In this respect, the camera system, as previously proposed should include mechanisms for sensing and processing sensed images in addition to mechanisms for printing out the images on print media via a printhead system. It would be further desirable to provide for a system having a convenient and compact arrangement of components such that they can be inexpensively manufactured in an inexpensive manner so as to allow for the readily disposable form of printing.

SUMMARY OF THE INVENTION

It is an object of the present invention to provide for the efficient and effective operation of a print on demand camera system.

In accordance with a first aspect of the present invention, there is provided a camera system comprising an image sensor and processing device for sensing and processing an image; a print media supply means provided for the storage of print media; a print head for printing the sensed image on print media stored internally to the camera system; the image sensor and processing device comprising a single integrated circuit chip including the following interconnected components: a processing unit for controlling the operation of the camera system; a program ROM utilized by the processing unit; a CMOS active pixel image sensor for sensing the image; a memory store for storing images and associated program data; a series of motor drive units each including motor drive transistors for the driving of external mechanical system of the camera system; and print head interface unit for driving the print head for printing of the sensed image.

Preferably, the motor drive transistors are located along one peripheral edge of the integrated circuit and the CMOS pixel image sensor is located along an opposite edge of the integrated circuit.

Preferably, the image sensor and processing device further include a halftoning unit for halftoning the sensed image into corresponding bi-level pixel elements for printing out by the print head. The halftoning unit can implement a dither operation and includes a halftone matrix ROM utilized by the halftoning unit in performing the halftoning operation.

BRIEF DESCRIPTION OF THE DRAWINGS

Notwithstanding any other forms which may fall within the scope of the present invention, preferred forms of the invention will now be described, by way of example only, with reference to the accompanying drawings in which:

FIG. **1** illustrated a side front perspective view of the assembled camera of the preferred embodiment;

FIG. **2** illustrates a back side perspective view, partly exploded, of the preferred embodiment;

FIG. **3** is a side perspective view of the chassis of the preferred embodiment;

FIG. **4** is a side perspective view of the chassis illustrating the insertion of the electric motors;

FIG. **5** is an exploded perspective of the ink supply mechanism of the preferred embodiment;

FIG. **6** is a side perspective of the assembled form of the ink supply mechanism of the preferred embodiment;

FIG. **7** is a front perspective view of the assembled form of the ink supply mechanism of the preferred embodiment;

FIG. **8** is an exploded perspective of the platten unit of the preferred embodiment;

FIG. **9** is a side perspective view of the assembled form of the platten unit;

FIG. **10** is also a perspective view of the assembled form of the platten unit;

FIG. **11** is an exploded perspective unit of the printhead recapping mechanism of the preferred embodiment;

FIG. **12** is a close up exploded perspective of the recapping mechanism of the preferred embodiment;

FIG. **13** is an exploded perspective of the ink supply cartridge of the preferred embodiment;

FIG. **14** is a close up perspective, partly in section of the internal portions of the ink supply cartridge in an assembled form;

FIG. **15** is a schematic block diagram of one form of chip layer of the image capture and processing chip of the preferred embodiment;

FIG. **16** is an exploded perspective illustrating the assembly process of the preferred embodiment;

FIG. **17** illustrates a front exploded perspective view of the assembly process of the preferred embodiment;

FIG. **18** illustrates a side perspective view of the assembly process of the preferred embodiment;

FIG. **19** illustrates a side perspective view of the assembly process of the preferred embodiment;

FIG. **20** is a perspective view illustrating the insertion of the platten unit in the preferred embodiment;

FIG. **21** illustrates the interconnection of the electrical components of the preferred embodiment;

FIG. **22** illustrates the process of assembling the preferred embodiment; and

FIG. **23** is a perspective view further illustrating the assembly process of the preferred embodiment.

DESCRIPTION OF PREFERRED AND OTHER EMBODIMENTS

Turning initially simultaneously to FIG. **1**, and FIG. **2** there is illustrated perspective views of an assembled camera constructed in accordance with the preferred embodiment with FIG. **1** showing a front side perspective view and FIG. **2** showing a back side perspective view. The camera **1** includes a paper or plastic film jacket **2** which can include simplified instructions **3** for the operation of the camera system **1**. The camera system **1** includes a first "take" button **4** which is depressed to capture an image. The captured image is output via output slot **6**. A further copy of the image can be obtained through depressing a second "printer copy" button **7** whilst an LED light **5** is illuminated. The camera system also provides the usual view finder **8** in addition to a CCD image capture/lensing system **9**.

The camera system **1** provides for a standard number of output prints after which the camera system **1** ceases to function. A prints left indicator slot **10** is provided to indicate the number of remaining prints. A refund scheme at the point of purchase is assumed to be operational for the return of used camera systems for recycling.

Turning now to FIG. **3**, the assembly of the camera system is based around an internal chassis **12** which can be a plastic injection molded part. A pair of paper pinch rollers **28, 29** utilized for decurling are snap fitted into corresponding frame holes eg. **26, 27**.

As shown in FIG. **4**, the chassis **12** includes a series of mutually opposed prongs eg. **13, 14** into which is snapped fitted a series of electric motors **16, 17**. The electric motors **16, 17** can be entirely standard with the motor **16** being of a stepper motor type and include a cogged end portion **19, 20** for driving a series of gear wells. A first set of gear wells is provided for controlling a paper cutter mechanism and a second set is provided for controlling print roll movement.

Turning next to FIGS. **5** to **7**, there is illustrated an ink supply mechanism **40** utilized in the camera system. FIG. **5** illustrates a back exploded perspective view, FIG. **6** illustrates a back assembled view and FIG. **7** illustrates a front assembled view. The ink supply mechanism **40** is based around an ink supply cartridge **42** which contains printer ink and a print head mechanism for printing out pictures on demand. The ink supply cartridge **42** includes a side aluminium strip **43** which is provided as a shear strip to assist in cutting images from a paper roll.

A dial mechanism **44** is provided for indicating the number of "prints left". The dial mechanism **44** is snap fitted through a corresponding mating portion **46** so as to be freely rotatable.

As shown in FIG. **6**, the print head includes a flexible PCB strip **47** which interconnects with the print head and provides for control of the print head. The interconnection between the Flex PCB strip and an image sensor and print head chip can be via Tape Automated Bonding (TAB) Strips **51, 58**. A moulded aspherical lens and aperture shim **50** (FIG. **5**) is also provided for imaging an image onto the surface of the image sensor chip normally located within cavity **53** and a light box module or hood **52** is provided for snap fitting over the cavity **53** so as to provide for proper light control. A series of decoupling capacitors eg. **34** can also be provided. Further a plug **45** (FIG. **7**) is provided for re-plugging ink holes after refilling. A series of guide prongs eg. **55–57** are further provided for guiding the flexible PCB strip **47**.

The ink supply mechanism **40** interacts with a platten unit which guides print media under a printhead located in the ink supply mechanism. FIG. **8** shows an exploded view of the platten unit **60**, while FIGS. **9** and **10** show assembled views of the platten unit. The platten unit **60** includes a first pinch roller **61** which is snap fitted to one side of a platten base **62**. Attached to a second side of the platten base **62** is a cutting mechanism **63** which traverses the platten by means of a rod **64** having a screwed thread which is rotated by means of cogged wheel **65** which is also fitted to the platten **62**. The screwed thread engages a block **67** which includes a cutting wheel **68** fastened via a fastener **69**. Also mounted to the block **67** is a counter actuator which includes a prong **71**. The prong **71** acts to rotate the dial mechanism **44** of FIG. **6** upon the return traversal of the cutting wheel. As shown previously in FIG. **6**, the dial mechanism **44** includes a cogged surface which interacts with pawl lever **73**, thereby maintaining a count of the number of photographs taken on the surface of dial mechanism **44**. The cutting mechanism **63** is inserted into the platten base **62** by means of a snap fit via receptacle eg. **74**.

The platten **62** includes an internal recapping mechanism **80** for recapping the print head when not in use. The recapping mechanism **80** includes a sponge portion **81** and is operated via a solenoid coil so as to provide for recapping of the print head. In the preferred embodiment, there is provided an inexpensive form of printhead re-capping mechanism provided for incorporation into a handheld camera system so as to provide for printhead re-capping of an inkjet printhead.

FIG. **11** illustrates an exploded view of the recapping mechanism whilst FIG. **12** illustrates a close up of the end portion thereof. The re-capping mechanism **90** is structured around a solenoid including a **16** turn coil **75** which can comprise insulated wire. The coil **75** is turned around a first stationery solenoid arm **76** which is mounted on a bottom surface of the pattern **62**(FIG. **8**) and includes a post portion **77** to magnify effectiveness of operation. The arm **76** can comprise a ferrous material.

A second moveable arm of the solenoid actuator is also provided **78**. The arm **78** being moveable and also made of ferrous material. Mounted on the arm is a sponge portion surrounded by an elastomer strip **79**. The elastomer strip **79** is of a generally arcuate cross-section and act as a leaf springs against the surface of the printhead ink supply cartridge **42** (FIG. **5**) so as to provide for a seal against the surface of the printhead ink supply cartridge **42**. In the quiescent position a elastomer spring units **87**, **88** act to resiliently deform the elastomer seal **79** against the surface of the ink supply unit **42**.

When it is desired to operate the printhead unit, upon the insertion of paper, the solenoid coil **75** is activated so as to cause the arm **78** to move down to be adjacent to the end plate **76**. The arm **78** is held against end plate **76** while the printhead is printing by means of a small "keeper current" in coil **77**. Simulation results indicate that the keeper current can be significantly less than the actuation current. Subsequently, after photo printing, the paper is guillotined by the cutting mechanism **63** of FIG. **8** acting against Aluminium Strip **43** of FIG. **5**, and rewound so as to clear the area of the re-capping mechanism **88**. Subsequently, the current is turned off and springs **87**, **88** return the arm **78** so that the elastomer seal is again resting against the printhead ink supply cartridge.

It can be seen that the preferred embodiment provides for a simple and inexpensive means of re-capping a printhead through the utilisation of a solenoid type device having a long rectangular form. Further, the preferred embodiment utilises minimal power in that currents are only required whilst the device is operational and additionally, only a low keeper current is required whilst the printhead is printing.

Turning next to FIGS. **13** and **14**, FIG. **13** illustrates an exploded perspective of the ink supply cartridge **42** whilst FIG. **14** illustrates a close up sectional view of a bottom of the ink supply cartridge with the printhead unit in place. The ink supply cartridge **42** is based around a page width printhead **102** which comprises a long slither of silicon having a series of holes etched on the back surface for the supply of ink to a front surface of the silicon wafer for subsequent ejection via a micro electro mechanical system. The form of ejection can be many different forms such as those set out in the tables below.

Of course, many other inkjet technologies, as referred to the attached tables below, can also be utilised when constructing a printhead unit **102**. The fundamental requirement of the ink supply cartridge **42** being the supply of ink to a series of colour channels etched through the back surface of the printhead **102**. In the description of the preferred embodiment, it is assumed that a three colour printing process is to be utilised so as to provide full colour picture output. Hence, the print supply unit **42** includes three ink supply reservoirs being a cyan reservoir **104**, a magenta reservoir **105** and a yellow reservoir **106**. Each of these reservoirs is required to store ink and includes a corresponding sponge type material **107–109** which assists in stabilising ink within the corresponding ink channel and therefore preventing the ink from sloshing back and forth when the printhead is utilised in a handheld camera system. The reservoirs **104**, **105**, **106** are formed through the mating of first exterior plastic piece **110** mating with a second base piece) **111**.

At a first end of the base piece **11** includes a series of air inlet **113–115**. The air inlet leads to a corresponding winding channel which is hydrophobically treated so as to act as an ink repellent and therefore repel any ink that may flow along the air inlet channel. The air inlet channel further takes a convoluted path further assisting in resisting any ink flow out of the chambers **104–106**. An adhesive tape portion **117** is provided for sealing the channels within end portion **118**.

At the top end, there is included a series of refill holes for refilling corresponding ink supply chambers **104**, **105**, **106**. A plug **121** is provided for sealing the refill holes.

Turning now to FIG. **14**, there is illustrated a close up perspective view, partly in section through the ink supply cartridge **42** of FIG. **13** when formed as a unit. The ink supply cartridge includes the three colour ink reservoirs **104**, **105**, **106** which supply ink to different portions of the back surface of printhead **102** which includes a series of apertures **128** defined therein for carriage of the ink to the front surface.

The ink supply unit includes two guide walls **124**, **125** which separate the various ink chambers and are tapered into an end portion abutting the surface of the printhead **102**. The guide walls are further mechanically supported and regular spaces by a block portions eg. **126** which are placed at regular intervals along the length of the printhead supply unit. The block portions **126** leaving space at portions close to the back of printhead **102** for the flow of ink around the back surface thereof.

The printhead supply unit is preferably formed from a multi-part plastic injection mould and the mould pieces eg. **10**, **11** (FIG. **1**) snap together around the sponge pieces **107**, **109**. Subsequently, a syringe type device can be inserted in the ink refill holes and the ink reservoirs filled with ink with the air flowing out of the air outlets **113–115**. Subsequently, the adhesive tape portion **117** and plug **121** are attached and the printhead tested for operation capabilities. Subsequently, the ink supply cartridge **42** can be readily removed for refilling by means of removing the ink supply cartridge, performing a washing cycle, and then utilising the holes for the insertion of a refill syringe filled with ink for refilling the ink chamber before returning the ink supply cartridge **42** to a camera.

Turning now to FIG. **15**, there is shown an example layout of the Image Capture and Processing Chip (ICP) **48**. The Image Capture and Processing Chip **48** provides most of the electronic functionality of the camera with the exception of the print head chip. The chip **48** is a highly integrated system. It combines CMOS image sensing, analog to digital conversion, digital image processing, DRAM storage, ROM, and miscellaneous control functions in a single chip.

The chip is estimated to be around 32 mm^2 using a leading edge 0.18 micron CMOS/DRAM/APS process. The chip size and cost can scale somewhat with Moore's law, but is dominated by a CMOS active pixel sensor array **201**, so scaling is limited as the sensor pixels approach the diffraction limit.

The ICP **48** includes CMOS logic, a CMOS image sensor, DRAM, and analog circuitry. A very small amount of flash memory or other non-volatile memory is also preferably included for protection against reverse engineering.

Alternatively, the ICP can readily be divided into two chips: one for the CMOS imaging array, and the other for the remaining circuitry. The cost of this two chip solution should not be significantly different than the single chip ICP, as the extra cost of packaging and bond-pad area is somewhat cancelled by the reduced total wafer area requiring the color filter fabrication steps.

The ICP preferably contains the following functions:

Function
1.5 megapixel image sensor
Analog Signal Processors
Image sensor column decoders
Image sensor row decoders
Analogue to Digital Conversion (ADC)
Function
Column ADC's
Auto exposure
12 Mbits of DRAM
DRAM Address Generator
Color interpolator
Convolver
Color ALU
Halftone matrix ROM
Digital halftoning
Print head interface
8 bit CPU core
Program ROM
Flash memory
Scratchpad SRAM
Parallel interface (8 bit)
Motor drive transistors (5)
Clock PLL
JTAG test interface
Test circuits
Busses
Bond pads

The CPU, DRAM, Image sensor, ROM, Flash memory, Parallel interface, JTAG interface and ADC can be vendor supplied cores. The ICP is intended to run on 1.5V to minimize power consumption and allow convenient operation from two AA type battery cells.

FIG. **15** illustrates a layout of the ICP **48**. The ICP **48** is dominated by the imaging array **201**, which consumes around 80% of the chip area. The imaging array is a CMOS 4 transistor active pixel design with a resolution of 1,500×1,000. The array can be divided into the conventional configuration, with two green pixels, one red pixel, and one blue pixel in each pixel group. There are 750×500 pixel groups in the imaging array.

The latest advances in the field of image sensing and CMOS image sensing in particular can be found in the October, 1997 issue of IEEE Transactions on Electron Devices and, in particular, pages 1689 to 1968. Further, a specific implementation similar to that disclosed in the present application is disclosed in Wong et. al, "CMOS Active Pixel Image Sensors Fabricated Using a 1.8V, 0.25 μm CMOS Technology", IEDM 1996, page 915.

The imaging array uses a 4 transistor active pixel design of a standard configuration. To minimize chip area and therefore cost, the image sensor pixels should be as small as feasible with the technology available. With a four transistor cell, the typical pixel size scales as 20 times the lithographic feature size. This allows a minimum pixel area of around 3.6 μm×3.6 μm. However, the photosite must be substantially above the diffraction limit of the lens. It is also advantageous to have a square photosite, to maximize the margin over the diffraction limit in both horizontal and vertical directions. In this case, the photosite can be specified as 2.5 μm×2.5 μm. The photosite can be a photogate, pinned photodiode, charge modulation device, or other sensor.

The four transistors are packed as an 'L' shape, rather than a rectangular region, to allow both the pixel and the photosite to be square. This reduces the transistor packing density slightly, increasing pixel size. However, the advantage in avoiding the diffraction limit is greater than the small decrease in packing density.

The transistors also have a gate length which is longer than the minimum for the process technology. These have been increased from a drawn length of 0.18 micron to a drawn length of 0.36 micron. This is to improve the transistor matching by making the variations in gate length represent a smaller proportion of the total gate length.

The extra gate length, and the 'L' shaped packing, mean that the transistors use more area than the minimum for the technology. Normally, around 8 μm^2 would be required for rectangular packing. Preferably, 9.75 μm^2 has been allowed for the transistors.

The total area for each pixel is 16 μm^2, resulting from a pixel size of 4 μm×4 μm. With a resolution of 1,500×1,000, the area of the imaging array **101** is 6,000 μm×4,000 μm, or 24 μmm^2.

The presence of a color image sensor on the chip affects the process required in two major ways:

The CMOS fabrication process should be optimized to minimize dark current

Color filters are required. These can be fabricated using dyed photosensitive polyimides, resulting in an added process complexity of three spin coatings, three photolithographic steps, three development steps, and three hardbakes.

There are 15,000 analog signal processors (ASPs) **205**, one for each of the columns of the sensor. The ASPs amplify the signal, provide a dark current reference, sample and hold the signal, and suppress the fixed pattern noise (FPN).

There are 375 analog to digital converters **206**, one for each four columns of the sensor array. These may be delta-sigma or successive approximation type ADC's. A row of low column ADC's are used to reduce the conversion speed required, and the amount of analog signal degradation incurred before the signal is converted to digital. This also eliminates the hot spot (affecting local dark current) and the substrate coupled noise that would occur if a single high speed ADC was used. Each ADC also has two four bit DAC's which trim the offset and scale of the ADC to further reduce FPN variations between columns. These DAC's are controlled by data stored in flash memory during chip testing.

The column select logic **204** is a 1:1500 decoder which enables the appropriate digital output of the ADCs onto the output bus. As each ADC is shared by four columns, the least significant two bits of the row select control **4** input analog multiplexors.

A row decoder **207** is a 1:1000 decoder which enables the appropriate row of the active pixel sensor array. This selects which of the 1000 rows of the imaging array is connected to analog signal processors. As the rows are always accessed in sequence, the row select logic can be implemented as a shift register.

An auto exposure system **208** adjusts the reference voltage of the ADC **205** in response to the maximum intensity sensed during the previous frame period. Data from the green pixels is passed through a digital peak detector. The peak value of the image frame period before capture (the reference frame) is provided to a digital to analogue converter(DAC), which generates the global reference voltage for the column ADCs. The peak detector is reset at the beginning of the reference frame. The minimum and maximum values of the three RGB color components are also collected for color correction.

The second largest section of the chip is consumed by a DRAM **210** used to hold the image. To store the 1,500×1,000 image from the sensor without compression, 1.5 Mbytes of DRAM **210** are required. This equals 12 Mbits, or slightly less than 5% of a 256 Mbit DRAM. The DRAM technology

assumed is of the 256 Mbit generation implemented using 0.18 μm CMOS.

Using a standard 8F cell, the area taken by the memory array is 3.11 mm^2. When row decoders, column sensors, redundancy, and other factors are taken into account, the DRAM requires around 4 μm^2.

This DRAM **210** can be mostly eliminated if analog storage of the image signal can be accurately maintained in the CMOS imaging array for the two seconds required to print the photo. However, digital storage of the image is preferable as it is maintained without degradation, is insensitive to noise, and allows copies of the photo to be printed considerably later.

A DRAM address generator **211** provides the write and read addresses to the DRAM **210**. Under normal operation, the write address is determined by the order of the data read from the CMOS image sensor **201**. This will typically be a simple raster format. However, the data can be read from the sensor **201** in any order, if matching write addresses to the DRAM are generated. The read order from the DRAM **210** will normally simply match the requirements of a color interpolator and the print head. As the cyan, magenta, and yellow rows of the print head are necessarily offset by a few pixels to allow space for nozzle actuators, the colors are not read from the DRAM simultaneously. However, there is plenty of time to read all of the data from the DRAM many times during the printing process. This capability is used to eliminate the need for FIFOs in the print head interface, thereby saving chip area. All three RGB image components can be read from the DRAM each time color data is required. This allows a color space converter to provide a more sophisticated conversion than a simple linear RGB to CMY conversion.

Also, to allow two dimensional filtering of the image data without requiring line buffers, data is retread from the DRAM array.

The address generator may also implement image effects in certain models of camera. For example, passport photos are generated by a manipulation of the read addresses to the DRAM. Also, image framing effects (where the central image is reduced), image warps, and kaleidoscopic effects can all be generated by manipulating the read addresses of the DRAM.

While the address generator **211** may be implemented with substantial complexity if effects are built into the standard chip, the chip area required for the address generator is small, as it consists only of address counters and a moderate amount of random logic.

A color interpolator **214** converts the interleaved pattern of red, 2×green, and blue pixels into RGB pixels. It consists of three 8 bit adders and associated registers. The divisions are by either 2 (for green) or 4 (for red and blue) so they can be implemented as fixed shifts in the output connections of the adders.

A convolver **215** is provided as a sharpening filter which applies a small convolution kernel (5×5) to the red, green, and blue planes of the image. The convolution kernel for the green plane is different from that of the red and blue planes, as green has twice as many samples. The sharpening filter has five functions:

To improve the color interpolation from the linear interpolation provided by the color interpolator, to a close approximation of a sinc interpolation.

To compensate for the image 'softening' which occurs during digitization.

To adjust the image sharpness to match average consumer preferences, which are typically for the image to be slightly sharper than reality. As the single use camera is intended as a consumer product, and not a professional photographic products, the processing can match the most popular settings, rather than the most accurate.

To suppress the sharpening of high frequency (individual pixel) noise. The function is similar to the 'unsharp mask' process.

To antialias Image Warping.

These functions are all combined into a single convolution matrix. As the pixel rate is low (less than 1 Mpixel per second) the total number of multiplies required for the three color channels is 56 million multiplies per second. This can be provided by a single multiplier. Fifty bytes of coefficient ROM are also required.

A color ALU **113** combines the functions of color compensation and color space conversion into the one matrix multiplication, which is applied to every pixel of the frame. As with sharpening, the color correction should match the most popular settings, rather than the most accurate.

A color compensation circuit of the color ALU provides compensation for the lighting of the photo. The vast majority of photographs are substantially improved by a simple color compensation, which independently normalizes the contrast and brightness of the three color components.

A color look-up table (CLUT) **212** is provided for each color component. These are three separate 256×8 SRAMs, requiring a total of 6,144 bits. The CLUTs are used as part of the color correction process. They are also used for color special effects, such as stochastically selected "wild color" effects.

A color space conversion system of the color ALU converts from the RGB color space of the image sensor to the CMY color space of the printer. The simplest conversion is a 1's complement of the RGB data. However, this simple conversion assumes perfect linearity of both color spaces, and perfect dye spectra for both the color filters of the image sensor, and the ink dyes. At the other extreme is a tri-linear interpolation of a sampled three dimensional arbitrary transform table. This can effectively match any non-linearity or differences in either color space. Such a system is usually necessary to obtain good color space conversion when the print engine is a color electrophotographic.

However, since the non-linearity of a halftoned ink jet output is very small, a simpler system can be used. A simple matrix multiply can provide excellent results. This requires nine multiplies and six additions per contone pixel. However, since the contone pixel rate is low (less than 1 Mpixel/sec) these operations can share a single multiplier and adder. The multiplier and adder are used in a color ALU which is shared with the color compensation function.

Digital halftoning can performed as a dispersed dot ordered dither using a stochastic optimized dither cell. A halftone matrix ROM **116** is provided for storing dither cell coefficients. A dither cell size of 32×32 is adequate to ensure that the cell repeat cycle is not visible. The three colors—cyan, magenta, and yellow—are all dithered using the same cell, to ensure maximum co-positioning of the ink dots. This minimizes 'muddying' of the mid-tones which results from bleed of dyes from one dot to adjacent dots while still wet. The total ROM size required is 1 KByte, as the one ROM is shared by the halftoning units for each of the three colors.

The digital halftoning used is dispersed dot ordered dither with stochastic optimized dither matrix. While dithering does not produce an image quite as 'sharp' as error diffusion, it does produce a more accurate image with fewer artifacts. The image sharpening produced by error diffusion is artificial, and less controllable and accurate than 'unsharp

mask' filtering performed in the contone domain. The high print resolution (1,600 dpi×1,600 dpi) results in excellent quality when using a well formed stochastic dither matrix.

Digital halftoning is performed by a digital halftoning unit **217** using a simple comparison between the contone information from the DRAM **210** and the contents of the dither matrix **216**. During the halftone process, the resolution of the image is changed from the 250 dpi of the captured contone image to the 1,600 dpi of the printed image. Each contone pixel is converted to an average of 40.96 halftone dots.

The ICP incorporates an 16 bit microcontroller CPU core **219** to run the miscellaneous camera functions, such as reading the buttons, controlling the motor and solenoids, setting up the hardware, and authenticating the refill station. The processing power required by the CPU is very modest, and a wide variety of processor cores can be used. As the entire CPU program is run from a small ROM **220**. Program compatibility between camera versions is not important, as no external programs are run. A 2 Mbit (256 Kbyte) program and data ROM **220** is included on chip. Most of this ROM space is allocated to data for outline graphics and fonts for specialty cameras. The program requirements are minor. The single most complex task is the encrypted authentication of the refill station. The ROM requires a single transistor per bit.

A Flash memory **221** may be used to store a 128 bit authentication code. This provides higher security than storage of the authentication code in ROM, as reverse engineering can be made essentially impossible. The Flash memory is completely covered by third level metal, making the data impossible to extract using scanning probe microscopes or electron beams. The authentication code is stored in the chip when manufactured. At least two other Flash bits are required for the authentication process: a bit which locks out reprogramming of the authentication code, and a bit which indicates that the camera has been refilled by an authenticated refill station. The flash memory can also be used to store FPN correction data for the imaging array. Additionally, a phase locked loop resealing parameter is stored is provided for scaling the clocking cycle to an appropriate correct time. The clock frequency does not require crystal accuracy since no date functions are provided. To eliminate the cost of a crystal, an on chip oscillator with a phase locked loop **124** is used. As the frequency of an on-chip oscillator is highly variable from chip to chip, the frequency ratio of the oscillator to the PLL is digitally trimmed during initial testing. The value is stored in Flash memory **121**. This allows the clock PLL to control the ink-jet heater pulse width with sufficient accuracy.

A scratchpad SRAM is a small static RAM **222** with a 6T cell. The scratchpad provided temporary memory for the 16 bit CPU. 1024 bytes is adequate.

A print head interface **223** formats the data correctly for the print head. The print head interface also provides all of the timing signals required by the print head. These timing signals may vary depending upon temperature, the number of dots printed simultaneously, the print medium in the print roll, and the dye density of the ink in the print roll.

The following is a table of external connections to the print head interface:

Connection	Function	Pins
DataBits [0–7]	Independent serial data to the eight segments of the print head	8
BitClock	Main data clock for the print head	1
ColorEnable [0–2]	Independent enable signals for the CMY actuators, allowing different pulse times for each color.	3
BankEnable [0–1]	Allows either simultaneous or interleaved actuation of two banks of nozzles. This allows two different print speed/power consumption tradeoffs	2
NozzleSelect [0–4]	Selects one of 32 banks of nozzles for simultaneous actuation	5
ParallelXferClock	Loads the parallel transfer register with the data from the shift registers	1
Total		20

The print head utilized is composed of eight identical segments, each 1.25 cm long. There is no connection between the segments on the print head chip. Any connections required are made in the external TAB bonding film, which is double sided. The division into eight identical segments is to simplify lithography using wafer steppers. The segment width of 1.25 cm fits easily into a stepper field. As the print head chip is long and narrow (10 cm×0.3 mm), the stepper field contains a single segment of 32 print head chips. The stepper field is therefore 1.25 cm×1.6 cm. An average of four complete print heads are patterned in each wafer step.

A single BitClock output line connects to all 8 segments on the print head. The 8 DataBits lines lead one to each segment, and are clocked in to the 8 segments on the print head simultaneously (on a BitClock pulse). For example, dot **0** is transferred to $segments_0$, dot **750** is transferred to $segment_1$, dot 1500 to $segment_2$ etc simultaneously.

The ParallelXferClock is connected to each of the 8 segments on the print head, so that on a single pulse, all segments transfer their bits at the same time.

The NozzleSelect, BankEnable and ColorEnable lines are connected to each of the 8 segments, allowing the print head interface to independently control the duration of the cyan, magenta, and yellow nozzle energizing pulses. Registers in the Print Head Interface allow the accurate specification of the pulse duration between 0 and 6 ms, with a typical duration of 2 ms to 3 ms.

A parallel interface **125** connects the ICP to individual static electrical signals. The CPU is able to control each of these connections as memory mapped I/O via a low speed bus.

The following is a table of connections to the parallel interface:

Connection	Direction	Pins
Paper transport stepper motor	Output	4
Capping solenoid	Output	1
Copy LED	Output	1
Photo button	Input	1
Copy button	Input	1
Total		8

A serial interface is also included to allow authentication of the refill station. This is included to ensure that the

cameras are only refilled with paper and ink at authorized refill stations, thus preventing inferior quality refill industry from occurring. The camera must authenticate the refill station, rather than the other way around. The secure protocol is communicated to the refill station via a serial data connection. Contact can be made to four gold plated spots on the ICP/print head TAB by the refill station as the new ink is injected into the print head.

Seven high current drive transistors eg. **227** are required. Four are for the four phases of the main stepper motor two are for the guillotine motor, and the remaining transistor is to drive the capping solenoid. These transistors are allocated 20,000 square microns (600,000 F) each. As the transistors are driving highly inductive loads, they must either be turned off slowly, or be provided with a high level of back EMF protection. If adequate back EMF protection cannot be provided using the chip process chosen, then external discrete transistors should be used. The transistors are never driven at the same time as the image sensor is used. This is to avoid voltage fluctuations and hot spots affecting the image quality. Further, the transistors are located as far away from the sensor as possible.

A standard JTAG (Joint Test Action Group) interface **228** is included in the ICP for testing purposes and for interrogation by the refill station. Due to the complexity of the chip, a variety of testing techniques are required, including BIST (Built In Self Test) and functional block isolation. An overhead of 10% in chip area is assumed for chip testing circuitry for the random logic portions. The overhead for the large arrays the image sensor and the DRAM) is smaller.

The JTAG interface is also used for authentication of the refill station. This is included to ensure that the cameras are only refilled with quality paper and ink at a properly constructed refill station, thus preventing inferior quality refills from occurring. The camera must authenticate the refill station, rather than vice versa. The secure protocol is communicated to the refill station during the automated test procedure. Contact is made to four gold plated spots on the ICP/print head TAB by the refill station as the new ink is injected into the print head.

FIG. **16** illustrates rear view of the next step in the construction process whilst FIG. **17** illustrates a front camera view.

Turning now to FIG. **16**, the assembly of the camera system proceeds via first assembling the ink supply mechanism **40**. The flex PCB is interconnected with batteries only one **84** of which is shown, which are inserted in the middle portion of a print roll **85** which is wrapped around a plastic former **86**. An end cap **89** is provided at the other end of the print roll **85** so as to fasten the print roll and batteries firmly to the ink supply mechanism.

The solenoid coil is interconnected (not shown) to interconnects **97**, **98** (FIG. **8**) which include leaf spring ends for interconnection with electrical contacts on the Flex PCB so as to provide for electrical control of the solenoid.

Turning now to FIGS. **17–19** the next step in the construction process is the insertion of the relevant gear chains into the side of the camera chassis. FIG. **17** illustrates a front camera view, FIG. **18** illustrates a back side view and FIG. **19** also illustrates a back side view. The first gear chain comprising gear wheels **22**, **23** are utilised for driving the guillotine blade with the gear wheel **23** engaging the gear wheel **65** of FIG. **8**. The second gear chain comprising gear wheels **24**, **25** and **26** engage one end of the print roller **61** of FIG. **8**. As best indicated in FIG. **18**, the gear wheels mate with corresponding buttons on the surface of the chassis with the gear wheel **26** being snap fitted into corresponding mating hole **27**.

Next, as illustrated in FIG. **20**, the assembled platten unit is then inserted between the print roll **85** and aluminium cutting blade **43**.

Turning now to FIG. **21**, by way of illumination, there is illustrated the electrically interactive components of the camera system. As noted previously, the components are based around a Flex PCB board and include a TAB film **58** which interconnects the printhead **102** with the image sensor and processing chip **51**. Power is supplied by two AA type batteries **83**, **84** and a paper drive stepper motor **16** is provided in addition to a rotary guillotine motor **20**.

An optical element **31** is provided for snapping into a top portion of the chassis **12**. The optical element **31** includes portions defining an optical view finder **32**, **33** which are slotted into mating portions **35**, **36** in view finder channel **37**. Also provided in the optical element **31** is a lensing system **38** for magnification of the prints left number in addition to an optical pipe element **39** for piping light from the LED **5** for external display.

Turning next to FIG. **22**, the assembled unit **90** is then inserted into a front outer case **91** which includes button **4** for activation of printouts.

Turning now to FIG. **23**, next, the unit **92** is provided with a snap-on back cover **93** which includes a slot **6** and copy print button **7**. A wrapper label containing instructions and advertising (not shown) is then wrapped around the outer surface of the camera system and pinch clamped to the cover by means of clamp strip **96** which can comprise a flexible plastic or rubber strip.

Subsequently, the preferred embodiment is ready for use as a one time use camera system that provides for instant output images on demand. It will be evident that the preferred embodiment further provides for a refillable camera system. A used camera can be collected and its outer plastic cases removed and recycled. A new paper roll and batteries can be added and the ink cartridge refilled. A series of automatic test routines can then be carried out to ensure that the printer is properly operational. Further, in order to ensure only authorised refills are conducted so as to enhance quality, routines in the on-chip program ROM can be executed such that the camera authenticates the refilling station using a secure protocol. Upon authentication, the camera can reset an internal paper count and an external case can be fitted on the camera system with a new outer label. Subsequent packing and shipping can then take place.

It will be further readily evident to those skilled in the art that the program ROM can be modified so as to allow for a variety of digital processing routines. In addition to the digitally enhanced photographs optimised for mainstream consumer preferences, various other models can readily be provided through mere re-programming of the program ROM. For example, a sepia classic old fashion style output can be provided through a remapping of the colour mapping function. A further alternative is to provide for black and white outputs again through a suitable colour remapping algorithm. Minimumless colour can also be provided to add a touch of colour to black and white prints to produce the effect that was traditionally used to colourize black and white photos. Further, passport photo output can be provided through suitable address remappings within the address generators. Further, edge filters can be utilised as is known in the field of image processing to produce sketched art styles. Further, classic wedding borders and designs can be placed around an output image in addition to the provision of relevant clip arts. For example, a wedding style camera might be provided. Further, a panoramic mode can be provided so as to output the well known panoramic format

of images. Further, a postcard style output can be provided through the printing of postcards including postage on the back of a print roll surface. Further, cliparts can be provided for special events such as Halloween, Christmas etc. Further, kleidoscopic effects can be provided through address remappings and wild colour effects can be provided through remapping of the colour lookup table. Many other forms of special event cameras can be provided for example, cameras dedicated to the Olympics, movie tie-ins, advertising and other special events.

The operational mode of the camera can be programmed so that upon the depressing of the take photo a first image is sampled by the sensor array to determine irrelevant parameters. Next a second image is again captured which is utilised for the output. The captured image is then manipulated in accordance with any special requirements before being initially output on the paper roll. The LED light is then activated for a predetermined time during which the DRAM is refreshed so as to retain the image. If the print copy button is depressed during this predetermined time interval, a further copy of the photo is output. After the predetermined time interval where no use of the camera has occurred, the onboard CPU shuts down all power to the camera system until such time as the take button is again activated. In this way, substantial power savings can be realized.

Ink Jet Technologies

The embodiments of the invention use an ink jet printer type device. Of course many different devices could be used. However presently popular ink jet printing technologies are unlikely to be suitable.

The most significant problem with thermal inkjet is power consumption. This is approximately 100 times that required for high speed, and stems from the energy-inefficient means of drop ejection. This involves the rapid boiling of water to produce a vapor bubble which expels the ink. Water has a very high heat capacity, and must be superheated in thermal inkjet applications. This leads to an efficiency of around 0.02%, from electricity input to drop momentum (and increased surface area) out.

The most significant problem with piezoelectric inkjet is size and cost. Piezoelectric crystals have a very small deflection at reasonable drive voltages, and therefore require a large area for each nozzle. Also, each piezoelectric actuator must be connected to its drive circuit on a separate substrate. This is not a significant problem at the current limit of around 300 nozzles per print head, but is a major impediment to the fabrication of pagewide print heads with 19,200 nozzles.

Ideally, the inkjet technologies used meet the stringent requirements of in-camera digital color printing and other high quality, high speed, low cost printing applications. To meet the requirements of digital photography, new inkjet technologies have been created. The target features include:

low power (less than 10 Watts)

high resolution capability (1,600 dpi or more)

photographic quality output

low manufacturing cost

small size (page width times minimum cross section)

high speed (<2 seconds per page).

All of these features can be met or exceeded by the inkjet systems described below with differing levels of difficulty. 45 different inkjet technologies have been developed by the Assignee to give a wide range of choices for high volume manufacture. These technologies form part of separate applications assigned to the present Assignee as set out in the table below.

The inkjet designs shown here are suitable for a wide range of digital printing systems, from battery powered one-time use digital cameras, through to desktop and network printers, and through to commercial printing systems.

For ease of manufacture using standard process equipment, the print head is designed to be a monolithic 0.5 micron CMOS chip with MEMS post processing. For color photographic applications, the print head is 100 mm long, with a width which depends upon the inkjet type. The smallest print head designed is IJ38, which is 0.35 mm wide, giving a chip area of 35 square mm. The print heads each contain 19,200 nozzles plus data and control circuitry.

Ink is supplied to the back of the print head by injection molded plastic ink channels. The molding requires 50 micron features, which can be created using a lithographically micromachined insert in a standard injection molding tool. Ink flows through holes etched through the wafer to the nozzle chambers fabricated on the front surface of the wafer. The print head is connected to the camera circuitry by tape automated bonding.

Cross-Referenced Applications

The following table is a guide to cross-referenced patent applications filed concurrently herewith and discussed hereinafter with the reference being utilized in subsequent tables when referring to a particular case:

Docket No.	Reference	Title
IJ01US	IJ01	Radiant Plunger Ink Jet Printer
IJ02US	IJ02	Electrostatic Ink Jet Printer
IJ03US	IJ03	Planar Thermoelastic Bend Actuator Ink Jet
IJ04US	IJ04	Stacked Electrostatic Ink Jet Printer
IJ05US	IJ05	Reverse Spring Lever Ink Jet Printer
IJ06US	IJ06	Paddle Type Ink Jet Printer
IJ07US	IJ07	Permanent Magnet Electromagnetic Ink Jet Printer
IJ08US	IJ08	Planar Swing Grill Electromagnetic Ink Jet Printer
IJ09US	IJ09	Pump Action Refill Ink Jet Printer
IJ10US	IJ10	Pulsed Magnetic Field Ink Jet Printer
IJ11US	IJ11	Two Plate Reverse Firing Electromagnetic Ink Jet Printer
IJ12US	IJ12	Linear Stepper Actuator Ink Jet Printer
IJ13US	IJ13	Gear Driven Shutter Ink Jet Printer
IJ14US	IJ14	Tapered Magnetic Pole Electromagnetic Ink Jet Printer
IJ15US	IJ15	Linear Spring Electromagnetic Grill Ink Jet Printer
IJ16US	IJ16	Lorenz Diaphragm Electromagnetic Ink Jet Printer
IJ17US	IJ17	PTFE Surface Shooting Shuttered Oscillating Pressure Ink Jet Printer
IJ18US	IJ18	Buckle Grip Oscillating Pressure Ink Jet Printer
IJ19US	IJ19	Shutter Based Ink Jet Printer
IJ20US	IJ20	Curling Calyx Thermoelastic Ink Jet Printer
IJ21US	IJ21	Thermal Actuated Ink Jet Printer
IJ22US	IJ22	Iris Motion Ink Jet Printer
IJ23US	IJ23	Direct Firing Thermal Bend Actuator Ink Jet Printer
IJ24US	IJ24	Conductive PTFE Ben Activator Vented Ink Jet Printer
IJ25US	IJ25	Magnetostrictive Ink Jet Printer
IJ26US	IJ26	Shape Memory Alloy Ink Jet Printer
IJ27US	IJ27	Buckle Plate Ink Jet Printer
IJ28US	IJ28	Thermal Elastic Rotary Impeller Ink Jet Printer
IJ29US	IJ29	Thermoelastic Bend Actuator Ink Jet Printer
IJ30US	IJ30	Thermoelastic Bend Actuator Using PTFE and Corrugated Copper Ink Jet Printer
IJ31US	IJ31	Bend Actuator Direct Ink Supply Ink Jet Printer
IJ32US	IJ32	A High Young's Modulus Thermoelastic Ink Jet Printer
IJ33US	IJ33	Thermally actuated slotted chamber wall ink jet printer
IJ34US	IJ34	Ink Jet Printer having a thermal actuator comprising an external coiled spring

-continued

Docket No.	Reference	Title
IJ35US	IJ35	Trough Container Ink Jet Printer
IJ36US	IJ36	Dual Chamber Single Vertical Actuator Ink Jet
IJ37US	IJ37	Dual Nozzle Single Horizontal Fulcrum Actuator Ink Jet
IJ38US	IJ38	Dual Nozzle Single Horizontal Actuator Ink Jet
IJ39US	IJ39	A single bend actuator cupped paddle ink jet printing device
IJ40US	IJ40	A thermally actuated ink jet printer having a series of thermal actuator units
IJ41US	IJ41	A thermally actuated ink jet printer including a tapered heater element
IJ42US	IJ42	Radial Back-Curling Thermoelastic Ink Jet
IJ43US	IJ43	Inverted Radial Back-Curling Thermoelastic Ink Jet
IJ44US	IJ44	Surface bend actuator vented ink supply ink jet printer
IJ45US	IJ45	Coil Actuated Magnetic Plate Ink Jet Printer

Tables of Drop-on-Demand Inkjets

Eleven important characteristics of the fundamental operation of individual inkjet nozzles have been identified. These characteristics are largely orthogonal, and so can be elucidated as an eleven dimensional matrix. Most of the eleven axes of this matrix include entries developed by the present assignee.

The following tables form the axes of an eleven dimensional table of inkjet types.

Actuator mechanism (18 types)

Basic operation mode (7 types)

Auxiliary mechanism (8 types)

Actuator amplification or modification method (17 types)

Actuator motion (19 types)

Nozzle refill method (4 types)

Method of restricting back-flow through inlet (10 types)

Nozzle clearing method (9 types)

Nozzle plate construction (9 types)

Drop ejection direction (5 types)

Ink type (7 types)

The complete eleven dimensional table represented by these axes contains 36.9 billion possible configurations of inkjet nozzle. While not all of the possible combinations result in a viable inkjet technology, many million configurations are viable. It is clearly impractical to elucidate all of the possible configurations. Instead, certain inkjet types have been investigated in detail. These are designated IJ01 to IJ45 above.

Other inkjet configurations can readily be derived from these 45 examples by substituting alternative configurations along one or more of the 11 axes. Most of the IJ01 to IJ45 examples can be made into inkjet print heads with characteristics superior to any currently available inkjet technology.

Where there are prior art examples known to the inventor, one or more of these examples are listed in the examples column of the tables below. The IJ01 to IJ45 series are also listed in the examples column. In some cases, a printer may be listed more than once in a table, where it shares characteristics with more than one entry.

Suitable applications include: Home printers, Office network printers, Short run digital printers, Commercial print systems, Fabric printers, Pocket printers, Internet WWW printers, Video printers, Medical imaging, Wide format printers, Notebook PC printers, Fax machines, Industrial printing systems, Photocopiers, Photographic minilabs etc.

The information associated with the aforementioned 11 dimensional matrix are set out in the following tables.

ACTUATOR MECHANISM (APPLIED ONLY TO SELECTED INK DROPS)

Actuator Mechanism	Description	Advantages	Disadvantages	Examples
Thermal bubble	An electrothermal heater heats the ink to above boiling point, transferring significant heat to the aqueous ink. A bubble nucleates and quickly forms, expelling the ink. The efficiency of the process is low, with typically less than 0.05% of the electrical energy being transformed into kinetic energy of the drop.	Large force generated Simple construction No moving parts Fast operation Small chip area required for actuator	High power Ink carrier limited to water Low efficiency High temperatures required High mechanical stress Unusual materials required Large drive transistors Cavitation causes actuator failure Kogation reduces bubble formation Large print heads are difficult to fabricate	Canon Bubblejet 1979 Endo et al GB patent 2,007,162 Xerox heater-in-pit 1990 Hawkins et al U.S. Pat. No. 4,899,181 Hewlett-Packard TIJ 1982 Vaught et al U.S. Pat. No. 4,490,728
Piezoelectric	A piezoelectric crystal such as lead lanthanum zirconate (PZT) is electrically activated, and either expands, shears, or bends to apply pressure to the ink, ejecting drops.	Low power consumption Many ink types can be used Fast operation High efficiency	Very large area required for actuator Difficult to integrate with electronics High voltage drive transistors required Full pagewidth print heads impractical due to actuator size Requires electrical poling in high field strengths during manufacture	Kyser et al U.S. Pat. No. 3,946,398 Zoltan U.S. Pat. No. 3,683,212 1973 Stemme U.S. Pat. No. 3,747,120 Epson Stylus Tektronix IJ04
Electro-strictive	An electric field is used to activate electrostriction in relaxor materials such as lead lanthanum zirconate titanate (PLZT) or lead magnesium niobate (PMN).	Low power consumption Many ink types can be used Low thermal expansion Electric field strength required (approx. 3.5 V/μm) can be generated without difficulty Does not require electrical poling	Low maximum strain (approx. 0.01%) Large area required for actuator due to low strain Response speed is marginal (~10 μs) High voltage drive transistors required Full pagewidth print heads impractical due to actuator size	Seiko Epson, Usui et all JP 253401/96 IJ04

-continued

ACTUATOR MECHANISM (APPLIED ONLY TO SELECTED INK DROPS)

Actuator Mechanism	Description	Advantages	Disadvantages	Examples
Ferroelectric	An electric field is used to induce a phase transition between the antiferroelectric (AFE) and ferroelectric (FE) phase. Perovskite materials such as tin modified lead lanthanum zirconate titanate (PLZSnT) exhibit large strains of up to 1% associated with the AFE to FE phase transition.	Low power consumption Many ink types can be used Fast operation (<1 μs) Relatively high longitudinal strain High efficiency Electric field strength of around 3 V/μm can be readily provided	Difficult to integrate with electronics Unusual materials such as PLZSnT are required Actuators require a large area	IJ04
Electrostatic plates	Conductive plates are separated by a compressible or fluid dielectric (usually air). Upon application of a voltage, the plates attract each other and displace ink, causing drop ejection. The conductive plates may be in a comb or honeycomb structure, or stacked to increase the surface area and therefore the force.	Low power consumption Many ink types can be used Fast operation	Difficult to operate electrostatic devices in an aqueous environment The electrostatic actuator will normally need to be separated from the ink Very large area required to achieve high forces High voltage drive transistors may be required Full pagewidth print heads are not competitive due to actuator size	IJ02, IJ04
Electrostatic pull on ink	A strong electric field is applied to the ink, whereupon electrostatic attraction accelerates the ink towards the print medium.	Low current consumption Low temperature	High voltage required May be damaged by sparks due to air breakdown Required field strength increases as the drop size decreases High voltage drive transistors required Electrostatic field attracts dust	1989 Saito et al., U.S. Pat. No. 4,799,068 1989 Muira et al, U.S. Pat. No. 4,810,954 Tone-jet
Permanent magnet electro-magnetic	An electromagnet directly attracts a permanent magnet, displacing ink and causing drop ejection. Rare earth magnets with a field strength around 1 Tesla can be used. Examples are: Samarium Cobalt (SaCo) and magnetic materials in the neodymium iron boron family (NdFeB, NdDyFeBNb, NdDyFeB, etc)	Low power consumption Many ink types can be used Fast operation High efficiency Easy extension from single nozzles to pagewidth print heads	Complex fabrication Permanent magnetic materials such as Neodymium Iron Boron (NdFeB) required. High local currents required Copper metalization should be used for long electromigration lifetime and low resistivity Pigmented inks are usually infeasible Operating temperature limited to the Curie temperature (around 540 K)	IJ07, IJ10
Soft magnetic core electro-magnetic	A solenoid induced a magnetic field in a soft magnetic core or yoke fabricated from a ferrous material such as electroplated iron alloys such as CoNiFe[1], CoFe, or NiFe alloys. Typically, the soft magnetic material is in two parts, which are normally held apart by a spring. When the solenoid is actuated, the two parts attract, displacing the ink.	Low power consumption Many ink types can be used Fast operation High efficiency Easy extension from single nozzles to pagewidth print heads	Complex fabrication Materials not usually present in a CMOS fab such as NiFe, CoNiFe, or CoFe are required High local current required Copper metalization should be used for long electromigration lifetime and low resistivity Electroplating is required High saturation flux density is required (2.0–2.1 T is achievable with CoNiFe [1])	IJ01, IJ05, IJ08, IJ10, IJ12, IJ14, IJ15, IJ17
Magnetic Lorenz forec	The Lorenz force acting on a current carrying wire in a magnetic field is utilized. This allows the magnetic field to be supplied externally to the print head, for example with rare earth permanent magnets. Only the current carrying wire need be fabricated on the print-head, simplifying materials requirements.	Low power consumption Many ink types can be used Fast operation High efficiency Easy extension from single nozzles to pagewidth print heads	Force acts as a twisting motion Typically, only a quarter of the solenoid length provides force in a useful direction High local currents required Copper metalization should be used for long electromigration lifetime and low resistivity Pigmented inks are usually infeasible	IJ06, IJ11, IJ13, IJ16
Magneto-striction	The actuator uses the giant magnetostrictive effect of materials such as Terfenol-D (an alloy of terbium, dysprosium and iron developed at the Naval Ordnance Laboratory, hence Ter-Fe-NOL). For best efficiency, the actuator should be pre-stressed to approx. 8 MPa.	Many ink types can be used Fast operation Easy extension from single nozzles to pagewidth print heads High force is available	Force acts as a twisting motion Unusual materials such as Terfenol-D are required High local currents required Copper metalization should be used for long electromigration lifetime and low resistivity Pre-stressing may be required	Fischenbeck, U.S. Pat. No. 4,032,929 IJ25
Surface tension reduction	Ink under positive pressure is held in a nozzle be surface tension. The surface tension of the ink is reduced below the bubble threshold, causing the ink to egress from the nozzle.	Low power consumption Simple construction No unusual materials required in fabrication High efficiency	Requires supplementary force to effect drop separation Requires special ink surfactant Speed may be limited by surfactant properties	Silverbrook, EP 0771 658 A2 and related patent applications

-continued

ACTUATOR MECHANISM (APPLIED ONLY TO SELECTED INK DROPS)

Actuator Mechanism	Description	Advantages	Disadvantages	Examples
		Easy extension from single nozzles to pagewidth print heads		
Viscosity reduction	The ink viscosity is locally reduced to select which drops are to be ejected. A viscosity reduction can be achieved electrothermally with most inks, but special inks can be engineered for a 100:1 viscosity reduction.	Simple construction No unusual materials required in fabrication Easy extension from single nozzles to pagewidth print heads	Requires supplementary force to effect drop separation Requires special ink viscosity properties High speed is difficult to achieve Requires oscillating ink pressure A high temperature difference (typically 80 degrees) is required	Silverbrook, EP 0771 658 A2 and related patent applications
Acoustic	An acoustic wave is generated and focussed upon the drop ejection region.	Can operate without a nozzle plate	Complex drive circuitry Complex fabrication Low efficiency Poor control of drop position Poor control of drop volume	1993 Hadimioglu et al, EUP 550,192 1993 Elrod et al, EUP 572,220
Thermoelastic bend actuator	An actuator which relies upon differential thermal expansion upon Joule heating is used.	Low power consumption Many ink types can be used Simple planar fabrication Small chip area required for each actuator Fast operation High efficiency CMOS compatible voltages and currents Standard MEMS processes can be used Easy extension from single nozzles to pagewidth print heads	Efficient aqueous operation requires a thermal insulator on the hot side Corrosion prevention can be difficult Pigmented inks may be infeasible, as pigment particles may jam the bend actuator	IJ03, IJ09, IJ17, IJ18 IJ19, IJ20, IJ21, IJ22 IJ23, IJ24, IJ27, IJ28 IJ29, IJ30, IJ31, IJ32 IJ33, IJ34, IJ35, IJ36 IJ37, IJ38, IJ39, IJ40 IJ41
High CTE thermoelastic actuator	A material with a very high coefficient of thermal expansion (CTE) such as polytetrafluorethylene (PTFE) is used. As high CTE materials are usually non-conductive, a heater fabriated from a conductive material is incorporated. A 50 μm long PTFE bend actuator with polysilicon heater and 15 mW power input can provide 180 μN force and 10 μm deflection. Actuator motions include: 1) Bend 2) Push 3) Buckle 4) Rotate	High force can be generated PTFE is a candidate for low dielectric constant insulation in ULSI Very low power consumption Many ink types can be used Simple planar fabrication Small chip area required for each actuator Fast operation High efficiency CMOS compatible voltages and currents Easy extension from single nozzles to pagewidth print heads	Requires special material (e.g. PTFE) Requires a PTFE deposition process, which is not yet standard in ULSI fabs PTFE deposition cannot be followed with high temperature (above 350° C.) processing Pigmented inks may be infeasible, as pigment particles may jam the bend actuator	IJ09, IJ17, IJ18, IJ20 IJ21, IJ22, IJ23, IJ24 IJ27, IJ28, IJ29, IJ30 IJ31, IJ42, IJ43, IJ44
Conductive polymer thermoelastic actuator	A polymer with a high coefficient of thermal expansion (such as PTFE) is doped with conducting substances to increase its conductivity to about 3 orders of magnitude below that of copper. The conducting polymer expands when resistively heated. Examples of conducting dopants include: 1) Carbon nanotubes 2) Metal fibers 3) Conductive polymers such as doped polythiophene 4) Carbon granules	High force can be generated Very low power consumption Many ink types can be used Simple planar fabrication Small chip area required for each actuator Fast operation High efficiency CMOS compatible voltages and currents Easy extension from single nozzles to pagewidth print heads	Requires special materials development (High CTE conductive polymer) Requires a PTFE deposition process, which is not yet standard in ULSI fabs PTFE deposition cannot be followed with high temperature (above 350° C.) processing Evaporation and CVD deposition techniques cannot be used Pigmented inks may be infeasible, as pigment particles may jam the bend actuator	IJ24
Shape memory alloy	A shape memory alloy such as TiNi (also known as Nitinol - Nickel Titanium alloy developed at the Naval Ordnance Laboratory) is thermally switched between its weak martensitic state and its high stiffness austenic state. The shape of the actuator in its martensitic state is deformed relative to the austenic shape. The shape changes causes ejection of a drop.	High force is available (stresses of hundreds of MPa) Large strain is available (more than 3%) High corrosion resistance Simple construction Easy extension from single nozzles to pagewidth print heads Low voltage operation	Fatigue limits maximum number of cycles Low strain (1%) is required to extend fatigue resistance Cycle rate limited by heat removal Requires unusual materials (TiNi) The latent heat of transformation must be provided High current operation Requires pre-stressing to distort the martensitic state	IJ26
Linear Magnetic	Linear magnetic actuators include the Linear Induction Actuator (LIA),	Linear Magnetic actuators can be constructed with	Requires unusual semiconductor materials such as soft magnetic alloys	IJ12

-continued

ACTUATOR MECHANISM (APPLIED ONLY TO SELECTED INK DROPS)

Actuator Mechanism	Description	Advantages	Disadvantages	Examples
Actuator	Linear Permanent Magnet Synchronous Actuator (LPMSA), Linear Reluctance Synchronous Actuator (LRSA), Linear Switched Reluctance Actuator (LSRA), and the Linear Stepper Actuator (LSA).	high thrust, long travel, and high efficiency using planar semiconductor fabrication techniques Long actuator travel is available Medium force is available Low voltage operation	(e.g. CoNiFe [1]) Some varieties also require permanent magnetic materials such as Neodymium iron boron (NdFeB) Requires complex multi-phase drive circuitry High current operation	

BASIC OPERATION MODE

Operational mode	Description	Advantages	Disadvantages	Examples
Actuator directly pushes ink	This is the simplest mode of operation: the actuator directly supplies sufficient kinetic energy to expel the drop. The drop must have a sufficient velocity to overcome the surface tension.	Simple operation No external fields required Satellite drops can be avoided if drop velocity is less than 4 m/s Can be efficient, depending upon the actuator used	Drop repetition rate is uusally limited to less than 10 KHz. However, this is not fundamental to the method, but is related to the refill method normally used All of the drop kinetic energy must be provided by the actuator Satellite drops usually form if drop velocity is greater than 4.5 m/s	Thermal inkjet Piezoelectric inkjet IJ01, IJ02, IJ03, IJ04 IJ05, IJ06, IJ07, IJ09 IJ11, IJ12, IJ14, IJ16 IJ20, IJ22, IJ23, IJ24 IJ25, IJ26, IJ27, IJ28 IJ29, IJ30, IJ31, IJ32 IJ33, IJ34, IJ35, IJ36 IJ37, IJ38, IJ39, IJ40 IJ41, IJ42, IJ43, IJ44
Proximity	The drops to be printed are selected by some manner (e.g. thermally induced surface tension reduction of pressurized ink). Selected drops are separated from the ink in the nozzle by contact with the print medium or a transfer roller.	Very simple print head fabrication can be used The drop selection means does not need to provide the energy required to separate the drop from the nozzle	Requires close proximity between the Electrostatic field for small nozzle transfer roller May require two print heads printing alternate rows of the image Monolithic color print heads are difficult	Silverbrook, EP 0771 658 A2 and related patent applications
Electrostatic pull on ink	The drops to be printed are selected by some manner (e.g. thermally induced surface tension reduction of pressurized inks). Selected drops are separated from the ink in the nozzle by a strong electric field.	Very simple print head fabrication can be used The drop selection means does not need to provide the energy required to separate the drop from the nozzle	Requires very high electrostatic field print head and the print media or sizes is above air breakdown Electrostatic field may attract dust	Silverbrook, EP 0771 658 A2 and related patent applications Tone-Jet
Magnetic pull on ink	The drops to be printed are selected by some manner (e.g. thermally induced surface tension reduction of pressurized ink). Selected drops are separated from the ink in the nozzle by a strong magnetic field acting on the magnetic ink.	Very simple print head fabrication can be used The drop selection means does not need to provide the energy required to separate the drop from the nozzle	Requires magnetic ink Ink colors other than black are difficult Requires very high magnetic fields	Silverbrook, EP 0771 658 A2 and related patent applications
Shutter	The actuator moves a shutter to block ink flow to the nozzle. The ink pressure is pulsed at a multiple of the drop ejection frequency.	High speed (>50 KHz) operation can be achieved due to reduced refill time Drop timing can be very accurate The actuator energy can be very low	Moving parts are required Requires ink pressure modulator Friction and wear must be considered Stiction is possible	IJ13, IJ17, IJ21
Shuttered grill	The actuator moves a shutter to block ink flow through a grill to the nozzle. The shutter movement need only be equal to the width of the grill holes.	Actuators with small travel can be used Actuators with small force can be used High speed (>50 KHz) operation can be achieved	Moving parts are required Requires ink pressure modulator Friction and wear must be considered Stiction is possible	IJ08, IJ15, IJ18, IJ19
Pulsed magnetic pull on ink pusher	A pulsed magnetic field attracts an 'ink pusher' at the drop ejection frequency. An actuator controls a catch, which prevents the ink pusher from moving when a drop is not to be ejected.	Extremely low energy operation is possible No heat dissipation problems	Requires an external pulsed magnetic field Requires special materials for both the actuator and the ink pusher Complex construction	IJ10

AUXILIARY MECHANISM (APPLIED TO ALL NOZZLES)

Auxiliary Mechanism	Description	Advantages	Disadvantages	Examples
None	The actuator directly fires the ink drop, and there is no external field or other mechanism required.	Simplicity of construction Simplicity of operation Small physical size	Drop ejection energy must be supplied by individual nozzle actuator	Most inkjets, including piezoelectric and thermal bubble. IJ01–IJ07, IJ09, IJ11 IJ12, IJ14, IJ20, IJ22 IJ23–IJ45
Oscillating ink pressure (including acoustic stimulation)	The ink pressure oscillates, providing much of the drop ejection energy. The actuator selects which drops are to be fired by selectively blocking or enabling nozzles. The ink pressure oscillation may be achieved by vibrating the print head, or preferably by an actuator in the ink supply.	Oscillating ink pressure can provide a refill pulse, allowing higher operating speed The actuators may operate with much lower energy Acoustic lenses can be used to focus the sound on the nozzles	Requires external ink pressure oscillator Ink pressure phase and amplitude must be carefully controlled Acoustic reflections in the nk chamber must be designed for	Silverbrook, EP 0771 658 A2 and related patent applications IJ08, IJ13, IJ15, IJ17 IJ18, IJ19, IJ21
Media proximity	The print head is placed in close proximity to the print medium. Selected drops protrude from the print head further than unselected drops, and contact the print medium. The drop soaks into the medium fast enough to cause drop separation.	Low power High accuracy Simple print head constructoin	Precision assembly required Paper fibers may cause problems Cannot print on rough substrates	Silverbrook, EP 0771 658 A2 and related patent applications
Transfer roller	Drops are printed to a transfer roller instead of straight to the print medium. A transfer roller can also be used for proximity drop separation.	High accuracy Wide range of print substrates can be used Ink can be dried on the transfer roller	Bulky Expensive Complex construction	Silverbrook, EP 0771 658 A2 and related patent applications Tektronix hot melt piezoelectric inkjet Any of the IJ series
Electrostatic	An electric field is used to accelerate selected drops towards the print medium.	Low power Simple print head construction	Field strength required for separation of small drops is near or above air breakdown	Silverbrook, EP 0771 658 A2 and related patent application Tone-Jet
Direct magnetic field	A magnetic field is used to accelerate selected drops of magnetic ink towards the print medium.	Low power Simple print head construction	Requires magnetic ink Requires strong magnetic field	Silverbrook, EP 0771 658 A2 and related patent application
Cross magnetic field	The print head is placed in a constant magnetic field. The Lorenz force in a current carrying wire is used to move the actuator.	Does not require magnetic materials to be integrated in the print head manufacturing process	Requires external magnet Current densities may be high, resulting in electromigration problems	IJ06, IJ16
Pulsed magnetic field	A pulsed magnetic field is used to cyclically attract a paddle, which pushes on the ink. A small actuator moves a catch, which selectively prevents the paddle from moving.	Very low power operation is possible Small print head size	Complex print head construction Magnetic materials required in print head	IJ10

ACTUATOR AMPLIFICATION OR MODIFICATION METHOD

Actuator amplification	Description	Advantages	Disadvantages	Examples
None	No actuator mechanical amplification is used. The actuator directly drives the drop ejection process.	Operational simplicity	Many actuator mechanisms have insufficient travel, or insufficient force, to efficiently drive the drop ejection process	Thermal Bubble Inkjet IJ01, IJ02, IJ06, IJ07 IJ16, IJ25, IJ26
Differential expansion bend actuator	An actuator material expands more on one side than on the other. The expansion may be thermal, piezoelectric, magnetostrictive, or other mechanism.	Provides greater travel in a reduced print head area The bend actuator converts a high force low travel actuator mechanism to high travel, lower force mechanism.	High stresses are involved Care must be taken that the materials do not delaminate Residual bend resulting from high temperature or high stress during formation	Piezoelectric IJ03, IJ09, IJ17–IJ24 IJ27, IJ29–IJ39, IJ42, IJ43, IJ44
Transient bend actuator	A trilayer bend actuator where the two outside layers are identical. This cancels bend due to ambient temperature and residual stress. The actuator only responds to transient heating of one side or the other.	Very good temperature stability High speed, as a new drop can be fired before heat dissipates Cancels residual stress of formation	High stresses are involved Care must be taken that the materials do not delaminate	IJ40, IJ41
Actuator stack	A series of thin actuators are stacked. This can be appropriate where actuators require high electric field	Increased travel Reduced drive voltage	Increased fabrication complexity Increased possiblity of short circuits due to pinholes	Some piezoelectric ink jets IJ04

-continued

ACTUATOR AMPLIFICATION OR MODIFICATION METHOD

Actuator amplification	Description	Advantages	Disadvantages	Examples
	strength, such as electrostatic and piezoelectric actuators.			
Multiple actuators	Multiple smaller actuators are used simultaneously to move the ink. Each actuator need provide only a portion of the force required.	Increases the force available from an actuator Multiple actuators can be positioned to control ink flow accurately	Actuator forces may not add linearly, reducing efficiency	IJ12, IJ13, IJ18, IJ20 IJ22, IJ28, IJ42, IJ43
Linear Spring	A linear spring is used to transform a motion with small travel and high force into a longer travel, lower force motion.	Matches low travel actuator with higher travel requirements Non-contact method of motion transformation	Requires print head area for the spring	IJ15
Reverse spring	The actuator loads a spring. When the actuator is turned off, the spring releases. This can reverse the force/distance curve of the actuator to make it compatible with the force/time requirements of the drop ejection.	Better coupling to the ink	Fabrication complexity High stress in the spring	IJ05, IJ11
Coiled actuator	A bend actuator is coiled to provide greater travel in a reduced chip area.	Increases travel Reduces chip area Planar implementations are relatively easy to fabricate.	Generally restricted to planar implementations due to extreme fabrication difficulty in other orientations.	IJ17, IJ21, IJ34, IJ35
Flexure bend actuator	A bend actuator has a small region near the fixture point, which flexes much more readily than the remainder of the actuator. The actuator flexing is effectively converted from an even coiling to an angular bend, resulting in greater travel of the actuator tip.	Simple means of increasing travel of a bend actuator	Care must be taken not to exceed the elastic limit in the flexure area Stress distribution is very uneven Difficult to accurately model with finite element analysis	IJ10, IJ19, IJ33
Gears	Gears can be used to increase travel at the expense of duration. Circular gears, rack and pinion, ratchets, and other gearing methods can be used.	Low force, low travel actuators can be used Can be fabricated using standard surface MEMS processes	Moving parts are required Several actuator cycles are required More complex drive electronics Complex construction Friction, friction, and wear are possible	IJ13
Catch	The actuator controls a small catch. The catch either enables or disables movement of an ink pusher that is controlled in a bulk manner.	Very low actuator energy Very small actuator size	Complex construction Requires external force Unsuitable for pigmented inks	IJ10
Buckle plate	A buckle plate can be used to change a slow actuator into a fast motion. It can also convert a high force, low travel actuator into a high travel, medium force motion.	Very fast movement achievable	Must stay within elastic limits of the materials for long device life High stresses involved Generally high power requirement	S. Hirata et al, "An Ink-jet Head . . . ", Proc. IEEE MEMS, Feb. 1996, pp. 418–423. IJ18, IJ27
Tapered magnetic pole	A tapered magnetic pole can increase travel at the expense of force.	Linearizes the magnetic force/distance curve	Complex construction	IJ14
Lever	A lever and fulcrum is used to transform a motion with small travel and high force into a motion with longer travel and lower force. The lever can also reverse the direction of travel.	Matches low travel actuator with higher travel requirements Fulcrum area has no linear movement, and can be used for a fluid seal	High stress around the fulcrum	IJI32, IJ36, IJ37
Rotary impeller	The actuator is connected to a rotary impeller. A small angular deflection of the actuator results in a rotation of the impeller vanes, which push the ink against stationary vanes and out of the nozzle.	High mechanical advantage The ratio of force to travel of the actuator can be matched to the nozzle requirements by varying the number of impeller vanes	Complex construction Unsuitable for pigmented inks	IJ28
Acoustic lens	A refractive or diffractive (e.g. zone plate) acoustic lens is used to concentrate sound waves.	No moving parts	Large area required Only relevant for acoustic ink jets	1993 Hadimioglu et al, EUP 550,192 1993 Elrod et al, EUP 572,220
Sharp conductive point	A sharp point is used to concentrate an electrostatic field.	Simple construction	Difficult to fabricate using standard VLSI processes for a surface ejecting ink-jet Only relevant for electrostatic ink jets	Tone-jet

ACTUATOR MOTION

Actuator motion	Description	Advantages	Disadvantages	Examples
Volume expansion	The volume of the actuator changes, pushing the ink in all directions.	Simple construction in the case of thermal ink jet	High energy is typically required to achieve volume expansion. This leads to thermal stress, cavitation, and kogation in thermal ink jet implementations	Hewlett-Packard Thermal Inkjet Canon Bubblejet
Linear, normal to chip surface	The actuator moves in a direction normal to the print head surface. The nozzle is typically in the line of movement.	Efficient coupling to ink drops ejected normal to the surface	High fabrication complexity may be required to achieve perpendicular motion	IJ01, IJ02, IJ04, IJ07 IJ11, IJ14
Linear, parallel to chip surface	The actuator moves parallel to the print head surface. Drop ejection may still be normal to the surface.	Suitable for planar fabrication	Fabrication complexity Friction Stiction	IJ12, IJ13, IJ15, IJ33, IJ34, IJ35, IJ36
Membrane push	An actuator with a high force but small area is used to push a stiff membrane that is in contact with the ink.	The effective area of the actuator becomes the membrane area	Fabrication complexity Actuator size Difficulty of integration in a VLSI process	1982 Howkins U.S. Pat. No. 4,459,601
Rotary	The actuator causes the rotation of some element, such a grill or impeller	Rotary levers may be used to increase travel Small chip area requirements	Device complexity May have friction at a pivot point	IJ05, IJ08, IJ13, IJ28
Bend	The actuator bends when energized. This may be due to differential thermal expansion, piezoelectric expansion, magnetostriction, or other form of relative dimensional change.	A very small change in dimensions can be converted to a large motion.	Requires the actuator to be made from at least two distinct layers, or to have a thermal difference across the actuator	1970 Kyser et al U.S. Pat. No. 3,946,398 1973 Stemme U.S. Pat. No. 3,747,120 IJ03, IJ09, IJ10, IJ19 IJ23, IJ24, IJ25, IJ29 IJ30, IJ31, IJ33, IJ34 IJ35
Swivel	The actuator swivels around a central pivot. This motion is suitable where there are opposite forces applied to opposite sides of the paddle, e.g. Lorenz force.	Allows operation where the net linear force on the paddle is zero Small chip area requirements	Inefficient coupling to the ink motion	IJ06
Straighten	The actuator is normally bent, and straightens when energized.	Can be used with shape memory alloys where the austenic phase is planar	Requires careful balances of stresses to ensure that the quiescent bend is accurate	IJ26, IJ32
Double bend	The actuator bends in one direction when one element is energized, and bends the other way when another element is energized.	One actuator can be used to power two nozzles. Reduced chip size. Not sensitive to ambient temperature	Difficult to make the drops ejected by both bend directions identical. A small efficiency loss compared to equivalent single bend actuators.	IJ36, IJ37, IJ38
Shear	Energizing the actuator causes a shear motion in the actuator material.	Can increase the effective travel of piezoelectric actuators	Not readily applicable to other actuator mechanisms	1985 Fishbeck U.S. Pat. No. 4,584,590
Radial constriction	The actuator squeezes an ink reservoir, forcing ink from a constricted nozzle.	Relatively easy to fabricate single nozzles from glass tubing as macroscopic structures	High force required Inefficient Difficult to integrate with VLSI processes	1970 Zoltan U.S. Pat. No. 3,683,212
Coil/uncoil	A coiled actuator uncoils or coils more tightly. The motion of the free end of the actuator ejects the ink.	Easy to fabricate as a planar VLSI process Small area required, therefore low cost	Difficult to fabricate for non-planar devices Poor out-of-plane stiffness	IJ17, IJ21, IJ34, IJ35
Bow	The actuator blows (or buckles) in the middle when energized.	Can increase the speed of travel Mechanically rigid	Maximum travel is constrained High force required	IJ16, IJ18, IJ27
Push-Pull	Two actuators control a shutter. One actuator pulls the shutter, and the other pushes it.	The structure is pinned at both ends, so has a high out-of-plane rigidity	Not readily suitable for inkjets which directly push the ink	IJ18
Curl inwards	A set of actuators curl inwards to reduce the volume of ink that they enclose.	Good fluid flow to the region behind the actuator increases efficiency	Design complexity	IJ20, IJ42
Curl outwards	A set of actuators curl outwards, pressurizing ink in a chamber surrounding the actuators, and expelling ink from a nozzle in the chamber.	Relatively simple construction	Relatively large chip area	IJ43
Iris	Multiple vanes enclose a volume of ink. These simultaneously rotate, reducing the volume between the vanes.	High efficiency Small chip area	High fabrication complexity Not suitable for pigmented inks	IJ22
Acoustic vibration	The actuator vibrates at a high frequency.	The actuator can be physically distant from the ink	Large area required for efficient operation at useful frequencies Acoustic coupling and crosstalk Complex drive circuitry	1993 Hadimioglu et al, EUP 550,192 1993 Elrod et al, EUP 572,220

-continued

ACTUATOR MOTION

Actuator motion	Description	Advantages	Disadvantages	Examples
None	In various ink jet designs the actuator does not move.	No moving parts	Poor control of drop volume and position Various other tradeoffs are required to eliminate moving parts	Silverbrook, EP 0771 658 A2 and related patent applications Tone-jet

NOZZLE REFILL METHOD

Nozzle refill method	Description	Advantages	Disadvantages	Examples
Surface tension	After the actuator is energized, it typically returns rapidly to its normal position. This rapid return sucks in air through the nozzle opening. The ink surface tension at the nozzle then exerts a small force restoring the meniscus to a minimum area.	Fabrication simplicity Operational simplicity	Low speed Surface tension force relatively small compared to actuator force Long refill time usually dominates the total repetition rate	Thermal inkjet Piezoelectric inkjet IJ01–IJ07, IJ10–IJ14 IJ16, IJ20, IJ22–IJ45
Shuttered oscillating ink pressure	Ink to the nozzle chamber is provided at a pressure that oscillates at twice the drop ejection frequency. When a drop is to be ejected, the shutter is opened for 3 half cycles: drop ejection, actuator return, and refill.	High speed Low actuator energy, as the actuator need only open or close the shutter, instead of ejecting the ink drop	Requires common ink pressure oscillator May not be suitable for pigmented inks	IJ08, IJ13, IJ15, IJ17 IJ18, IJ19, IJ21
Refill actuator	After the main actuator has ejected a drop a second (refill) actuator is energized. The refill actuator pushes ink into the nozzle chamber. The refill actuator returns slowly, to prevent its return from emptying the chamber again.	High speed, as the nozzle is actively refilled	Requires two independent actuators per nozzle	IJ09
Positive ink pressure	The ink is held a slight positive pressure. After the ink drop is ejected, the nozzle chamber fills quickly as surface tension and ink pressure both operate to refill the nozzle.	High refill rate, therefore a high drop repetition rate is possible	Surface spill must be prevented Highly hydrophobic print head surfaces are required	Silverbrook EP 0771 658 A2 and related patent applications Alternative for: IJ01–IJ07, IJ10–IJ14 IJ16, IJ20, IJ22–IJ45

METHOD OF RESTRICTING BACK-FLOW THROUGH INLET

Inlet back-flow restriction method	Description	Advantages	Disadvantages	Examples
Long inlet channel	The ink inlet channel to the nozzle chamber is made long and relatively narrow, relying on viscous drag to reduce inlet back-flow.	Design simplicity Operational simplicity Reduces crosstalk	Restricts refill rate May result in a relatively large chip area Only partially effective	Thermal inkjet Piezoelectric inkjet IJ42, IJ43
Positive ink pressure	The ink is under a positive pressure, so that in the quiescent state some of the ink drop already protrudes from the nozzle. This reduces the pressure in the nozzle chamber which is required to eject a certain volume of ink. The reduction in chamber pressure results in a reduction in ink pushed out through the inlet.	Drop selection and separation forces can be reduced Fast refill time	Requires a method (such as a nozzle rim or effective hydrophobizing, or both) to prevent flooding of the ejection surface of the print head.	Silverbrook, EP 0771 658 A2 and related patent applications Possible operation of the following: IJ01–IJ07, IJ09–IJ12 IJ14, IJ16, IJ20, IJ22, IJ23–IJ34, IJ36–IJ41 IJ44
Baffle	One of more baffles are placed in the inlet ink flow. When the actuator is energized, the rapid ink movement creates eddies which restrict the flow through the inlet. The slower refill	The refill rate is not as restricted as the long inlet method. Reduces crosstalk	Design complexity May increase fabrication complexity (e.g. Tektronix hot melt Piezoelectric print heads).	HP Thermal Ink Jet Tektronix piezoelectric ink jets

-continued

METHOD OF RESTRICTING BACK-FLOW THROUGH INLET

Inlet back-flow restriction method	Description	Advantages	Disadvantages	Examples
	process is unrestricted, and does not result in eddies.			
Flexible flap restricts inlet	In this method recently disclosed by Canon, the expanding actuator (bubble) pushes on a flexible flap that restricts the inet.	Significantly reduced back-flow for edge-shooter thermal ink jet devices	Not applicable to most inkjet configurations Increased fabrication complexity Inelastic deformation of polymer flap results in creep over extended use	Canon
Inlet filter	A filter is located between the ink inlet and the nozzle chamber. The filter has a multitude of small holes or slots, restricting ink flow. The filter also removes particles which may block the nozzle.	Additonal advantage of ink filtration Ink filter may be fabricated with no additional process steps	Restricts refill rate May result in complex construction	IJ04, IJ12, IJ24, IJ27 IJ29, IJ30
Small inlet compared to nozzle	The ink inlet channel to the nozzle chamber has a substantially smaller cross section that that of the nozzle, resulting in easier ink egress out of the nozzle than out of the inlet.	Design simplicity	Restricts refill rate May result in a relatively large chip area Only partially effective	IJ02, IJ37, IJ44
Inlet shutter	A secondary actuator controls the position of a shutter, closing off the ink inlet when the main actuator is energized.	Increases speed of the ink-jet print head operation	Requires separate refill actuator and drive circuit	IJ09
The inlet is located behind the ink-pushing surface	The method avoids the problem of inlet back-flow by arranging the ink-pushing surface of the actuator between the inlet and the nozzle.	Back-flow problem is eliminated	Requires careful design to minimize the negative pressure behind the paddle	IJ01, IJ03, IJ05, IJ06 IJ07, IJ10, IJ11, IJ14 IJ16, IJ22, IJ23, IJ25 IJ28, IJ31, IJ2, IJ33 IJ34, IJ35, IJ36, IJ39 IJ40, IJ41
Part of the actuator moves to shut off the inlet	The actuator and a wall of the ink chamber are arranged so that the motion of the actuator closes off the inlet.	Significant reductions in back-flow can be achieved Compact designs possible	Small increase in fabrication complexity	IJ07, IJ20, IJ26, IJ38
Nozzle actuator does not result in ink back-flow	In some configurations of ink jet, there is no expansion or movement of an actuator which may cause ink back-flow through the inlet.	Ink back-flow problem is eliminated	None related to ink back-flow on actuation	Silverbrook, EP 0771 658 A2 and related patent applications Valve-jet Tone-jet IJ08, IJ13, IJ15, IJ17 IJ18, IJ19, IJ21

NOZZLE CLEARING METHOD

Nozzle Clearing method	Description	Advantages	Disadvantages	Examples
Normal nozzle firing	All of the nozzles are fired periodically, before the ink has a chance to dry. When not in use the nozzles are sealed (capped) against air. The nozzle firing is usually performed during a special clearing cycle, after first moving the print head to a cleaning station.	No added complexity on the print head	May not be sufficient to displace dried ink	Most ink jet systems IJ01–IJ07, IJ09–IJ12 IJ14, IJ16, IJ20, IJ22 IJ23–IJ34, IJ36–IJ45
Extra power to ink heater	In systems which heat the ink, but do not boil it under normal situations, nozzle clearing can be achieved by over-powering the heater and boiling ink at the nozzle.	Can be highly effective if the heater is adjacent to the nozzle	Requires higher drive voltage for clearing May require larger drive transistors	Silverbrook, EP 0771 658 A2 and related patent application
Rapid succession of actuator pulses	The actuator is fired in rapid succession. In some configurations, this may cause heat build-up at the nozzle which boils the ink, clearing the nozzle. In other situations, it may cause sufficient vibrations to dislodge clogged nozzles.	Does not require extra drive circuits on the print head Can be readily controlled and initiated by digital logic	Effectiveness depends substantially upon the configuration of the inkjet nozzle	May be used with: IJ01–IJ07, IJ09–IJ11 IJ14, IJ16, IJ20, IJ22 IJ23–IJ25, IJ27–IJ34 IJ36–IJ45
Extra power to	Where an actuator is not normally	A simple solution where	Not suitable where there is a hard limit	May be used with:

-continued

NOZZLE CLEARING METHOD

Nozzle Clearing method	Description	Advantages	Disadvantages	Examples
ink pushing actuator	driven to the limit of its motion, nozzle clearing may be assisted by providing an enhanced drive signal to the actuator.	applicable	to actuator movement	IJ03, IJ09, IJ16, IJ20 IJ23, IJ24, IJ25, IJ27 IJ29, IJ30, IJ31, IJ32 IJ39, IJ40, IJ41, IJ42 IJ43, IJ44, IJ45
Acoustic resonance	An ultrasonic wave is applied to the ink chamber. This wave is of an appropriate amplitude and frequency to cause sufficient force at the nozzle to clear blockages. This is easiest to achieve if the ultrasonic wave is at a resonant frequency of the ink cavity.	A high nozzle clearing capability can be achieved May be implemented at very low cost in systems which already include acoustic actuators	High implementation cost if system does not already include an acoustic actuator	IJ08, IJ13, IJ15, IJ17 IJ18, IJ19, IJ21
Nozzle clearing plate	A microfabricated plate is pushed against the nozzles. The plate has a post for every nozzle. The array of posts	Can clear severely clogged nozzles	Accurate mechanical alignment is required Moving parts are required There is risk of damage to the nozzles Accurate fabrication is required	Silverbrook, EP 0771 658 A2 and related patent applications
Ink pressure pulse	The pressure of the ink is temporarily increased so that ink streams from all of the nozzles. This may be used in conjuction with actuator energizing.	May be effective where other methods cannot be used	Requires pressure pump or other pressure actuator Expensive Wasteful of ink	May be used with all IJ series ink jets
Print head wiper	A flexible 'blade' is wiped across the print head surface. The blade is usually fabricated from a flexible polymer, e.g. rubber or synthetic elastomer.	Effective for planar print head surfaces Low cost	Difficult to use if print head surface is non-planar or very fragile Requires mechanical parts Blade can wear out in high volume print systems	Many ink jet systems
Separate ink boiling heater	A separate heater is provided at the nozzle although the normal drop e-ection mechanism does not require it. The heaters do not require individual drive circuits, as many nozzles can be cleared simultaneously, and no imaging is required.	Can be effective where other nozzle clearing methods cannot be used Can be implemented at no additional cost in some inket configurations	Fabrication complexity	Can be used with many IJ series ink jets

NOZZLE PLATE CONSTRUCTION

Nozzle plate construction	Description	Advantages	Disadvantages	Examples
Electroformed nickel	A nozzle plate is separately fabricated from electroformed nickel, and bonded to the print head chip.	Fabrication simplicity	High temperatures and pressure are required to bond nozzle plate Minimum thickness constraints Differential thermal expansion	Hewlett Packard Thermal Inkjet
Laser ablated or drilled polymer	Individual nozzle holes are ablated by an intense UV laser in a nozzle plate, which is typically a polymer such as polyimide or polysulphone	No masks required Can be quite fast Some control over nozzle profile is possible Equipment required is relatively low cost	Each hole must be individually formed Special equipment required Slow where there are many thousands of nozzles per print head May produce thin burrs at exit holes	Canon Bubblejet 1988 Sercel et al., SPIE, Vol. 998 Excimer Beam Applications, pp. 76–83 1993 Watanabe et al., U.S. Pat. No. 5,208,604
Silicon micro-machined	A separate nozzle plate is micromachined from single crystal silicon, and bonded to the print head wafer.	High accuracy is attainable	Two part construction High cost Requires precision alignment Nozzles may be clogged by adhesive	K. Bean, IEEE Transactions on Electon Devices, Vol. ED-25, No. 10, 1978, pp 1185–1195 Xerox 1990 Hawkins et al., U. S. Pat. No. 4,899,181
Glass capillaries	Fine glass capillaries are drawn from glass tubing. This method has been used for making individual nozzles, but is difficult to use for bulk manufacturing of print heads with thousands of nozzles.	No expensive equipment required Simple to make single nozzles	Very small nozzle sizes are difficult to form Not suited for mass production	1970 Zoltan U.S. Pat. No. 3,683,212
Monolithic, surface micro-	The nozzle plate is deposited as a layer using standard VLSI deposition	High accuracy (<1 μm) Monolithic	Requires sacrificial layer under the nozzle plate to form the nozzle	Silverbrook, EP 0771 658 A2 and related

-continued

NOZZLE PLATE CONSTRUCTION

Nozzle plate construction	Description	Advantages	Disadvantages	Examples
machined using VLSI lithographic processes	techniques. Nozzles are etched in the nozzle plate using VLSI lithography and etching.	Low cost Existing processes can be used	chamber Surface may be fragile to the touch	patent applications IJ01, IJ02, IJ04, IJ11 IJ12, IJ17, IJ18, IJ20 IJ22, IJ24, IJ27, IJ28 IJ29, IJ30, IJ31, IJ32 IJ33, IJ34, IJ36, IJ37 IJ38, IJ39, IJ40, IJ41 IJ42, IJ43, IJ44
Monolithic, etched through substrate	The nozzle plate is a buried etch stop in the wafer. Nozzle chambers are etched in the front of the wafer, and the wafer is thinned from the back side. Nozzles are then etched in the etch stop layer.	High accuracy (<1 μm) Monolithic Low cost No differential expansion	Requires long etch times Requires a support wafer	IJ03, IJ05, IJ06, IJ07 IJ08, IJ09, IJ10, IJ13 IJ14, IJ15, IJ16, IJ19 IJ21, IJ23, IJ25, IJ26
No nozzle plate	Various methods have been tried to eliminate the nozzles entirely, to prevent nozzle clogging. These include thermal bubble mechanisms and acoustic lens mechanisms	No nozzles to become clogged	Difficult to control drop position accurately Crosstalk problems	Ricoh 1995 Sekiya et al U.S. Pat. No. 5,412,413 1993 Hadimioglu et al EUP 550,192 1993 Elrod et al EUP 572,220
Trough	Each drop ejector has a trough through which a paddle moves. There is no nozzle plate.	Reduced manufacturing complexity Monolithic	Drop firing direction is sensitive to wicking.	IJ35
Nozzle slit instead of individual nozzles	The elimination of nozzle holes and replacement by a slit encompassing many actuator positions reduces nozzle clogging, but increases crosstalk due to ink surface waves.	No nozzles to become clogged	Difficult to control drop position accurately Crosstalk problems	1989 Saito et al U.S. Pat. Pat. No. 4,799,068

DROP EJECTION DIRECTION

Ejection direction	Description	Advantages	Disadvantages	Examples
Edge ('edge shooter')	Ink flow is along the surface of the chip, and ink drops are ejected from the chip edge.	Simple construction No silicon etching required Good heat sinking via substrate Mechanically strong Ease of chip handing	Nozzles limited to edge High resolution is difficult Fast color printing requires one print head per color	Canon Bubblejet 1979 Endo et al GB patent 2,007,162 Xerox heater-in-pit 1990 Hawkins et al U.S. Pat. No. 4,899,181 Tone-jet
Surface ('roof shooter')	Ink flow is along the surface of the chip, and ink drops are ejected from the chip surface, normal to the plane of the chip.	No bulk silicon etching required Silicon can make an effective heat sink Mechanical strength	Maximum ink flow is severely restricted	Hewlett-Packard TIJ 1982 Vaught et al U.S. Pat. No. 4,490,728 IJ02, IJ11, IJ12, IJ20 IJ22
Through chip, forward ('up shooter')	Ink flow is through the chip, and ink drops are ejected from the front surface of the chip.	High ink flow Suitable for pagewidth print High nozzle packing density therefore low manufacturing cost	Requires bulk silicon etching	Silverbrook, EP 0771 658 A2 and related patent applications IJ04, IJ17, IJ18, IJ24 IJ27–IJ45
Through chip, reverse ('down shooter')	Ink flow is through the chip, and ink drops are ejected from the rear surface of the chip.	High ink flow Suitable for pagewidth print High nozzle packing density therefore low manufacturing cost	Requires wafer thinning Requires special handling during manufacture	IJ01, IJ03, IJ05, IJ06 IJ07, IJ08, IJ09, IJ10 IJ13, IJ14, IJ15, IJ16 IJ19, IJ21, IJ23, IJ25 IJ26
Through actuator	Ink flow is through the actuator, which is not fabricated as part of the same substrate as the drive transistors.	Suitable for piezoelectric print heads	Pagewidth print heads require several thousand connections to drive circuits Cannot be manufactured in standard CMOS fabs Complex assembly required	Epson Stylus Tektronix hot melt piezoelectric ink jets

INK TYPE

Ink type	Description	Advantages	Disadvantages	Examples
Aqueous, dye	Water based ink which typically contains: water, dye, surfactant, humectant, and biocide. Modern ink dyes have high water-fastness, light fastness	Environmentally friendly No odor	Slow drying Corrosive Bleeds on paper May strikethrough Cockles paper	Most existing inkjets All IJ series ink jets Silverbrook, EP 0771 658 A2 and related patent applications
Aqueous, pigment	Water based ink which typically contains: water, pigment, surfactant, humectant, and biocide. Pigments have an advantage in reduced bleed, wicking and strikethrough.	Environmentally friendly No odor Reduced bleed Reduced wicking Reduced strikethrough	Slow drying Corrosive Pigment may clog nozzles Pigment may clog actuator mechanisms Cockles paper	IJ02, IJ04, IJ21, IJ26 IJ27, IJ30 Silverbrook, EP 0771 658 A2 and related patent applications Piezoelectric ink-jets (with significant restrictions)
Methyl Ethyl Ketone (MEK)	MEK is a highly volatile solvent used for industrial printing on difficult surfaces such as aluminum cans.	Very fast drying Prints on various substrates such as metals and plastics	Odorous Flammable	All IJ series ink jets
Alcohol (ethanol, 2-butanol, and others)	Alcohol based inks can be used where the printer must operate at temperatures below the freezing point of water. An example of this is in-camera consumer photographic printing.	Fast drying Operates at sub-freezing temperatures Reduced paper cockle Low cost	Slight odor Flammable	All IJ series ink jets
Phase change (hot melt)	The ink is solid at room temperature, and is melted in the print head before jetting. Hot melt inks are usually wax based, with a melting point around 80° C. After jetting the ink freezes almost instantly upon contacting the print medium or a transfer roller.	No drying time ink instantly freezes on the print medium Almost any print medium can be used No paper cockle occurs No wicking occurs No bleed occurs No strikethrough occurs	High viscosity Printed ink typically has a 'waxy' feel Printed pages may 'block' Ink temperature may be above the curie point of permanent magnets Ink heaters consume power Long warm-up time	Tektronix hot melt piezoelectric ink jets 1989 Nowak U.S. Pat. No. 4,820,346 All IJ series ink jets
Oil	Oil based inks are extensively used in offset printing. They have advantages in improved characteristics on paper (especially no wicking or cockle). Oil soluble dies and pigments are required.	High solubility medium for some dyes Does not cockle paper Does not wick through paper	High viscosity: this is a significant limitation for use in inkjets, which usually require a low viscosity. Some short chain and multi-branched oils have a sufficiently low viscosity. Slow drying	All IJ series ink jets
Microemulsion	A microemulsion is a stable, self forming emulsion of oil, water, and surfactant. The characteristic drop size is less than 100 nm, and is determined by the preferred curvature of the surfactant.	Stops ink bleed High dye solubility Water, oil, and amphiphilic soluble dies can be used Can stabilize pigment suspensions	Viscosity higher than water Cost is slightly higher than water based ink High surfactant concentration required (around 5%)	All IJ series ink jets

Ink Jet Printing

A large number of new forms of ink jet printers have been developed to facilitate alternative ink jet technologies for the image processing and data distribution system. Various combinations of ink jet devices can be included in printer devices incorporated as part of the present invention. Australian Provisional Patent Applications relating to these ink jets which are specifically incorporated by cross reference include:

Australian Provisional Number	Filing Date	Title
PO8066	15-Jul-97	Image Creation Method and Apparatus (IJ01)
PO8072	15-Jul-97	Image Creation Method and Apparatus (IJ02)
PO8040	15-Jul-97	Image Creation Method and Apparatus (IJ03)
PO8071	15-Jul-97	Image Creation Method and Apparatus (IJ04)
PO8047	15-Jul-97	Image Creation Method and Apparatus (IJ05)
PO8035	15-Jul-97	Image Creation Method and Apparatus (IJ06)
PO8044	15-Jul-97	Image Creation Method and Apparatus (IJ07)
PO8063	15-Jul-97	Image Creation Method and Apparatus (IJ08)

-continued

Australian Provisional Number	Filing Date	Title
PO8057	15-Jul-97	Image Creation Method and Apparatus (IJ09)
PO8056	15-Jul-97	Image Creation Method and Apparatus (IJ10)
PO8069	15-Jul-97	Image Creation Method and Apparatus (IJ11)
PO8049	15-Jul-97	Image Creation Method and Apparatus (IJ12)
PO8036	15-Jul-97	Image Creation Method and Apparatus (IJ13)
PO8048	15-Jul-97	Image Creation Method and Apparatus (IJ14)
PO8070	15-Jul-97	Image Creation Method and Apparatus (IJ15)
PO8067	15-Jul-97	Image Creation Method and Apparatus (IJ16)
PO8001	15-Jul-97	Image Creation Method and Apparatus (IJ17)
PO8038	15-Jul-97	Image Creation Method and Apparatus (IJ18)
PO8033	15-Jul-97	Image Creation Method and Apparatus (IJ19)
PO8002	15-Jul-97	Image Creation Method and Apparatus (IJ20)
PO8068	15-Jul-97	Image Creation Method and Apparatus (IJ21)
PO8062	15-Jul-97	Image Creation Method and Apparatus (IJ22)
PO8034	15-Jul-97	Image Creation Method and Apparatus (IJ23)
PO8039	15-Jul-97	Image Creation Method and Apparatus (IJ24)
PO8041	15-Jul-97	Image Creation Method and Apparatus (IJ25)
PO8004	15-Jul-97	Image Creation Method and Apparatus (IJ26)
PO8037	15-Jul-97	Image Creation Method and Apparatus (IJ27)
PO8043	15-Jul-97	Image Creation Method and Apparatus (IJ28)

-continued

Australian Provisional Number	Filing Date	Title
PO8042	15-Jul-97	Image Creation Method and Apparatus (IJ29)
PO8064	15-Jul-97	Image Creation Method and Apparatus (IJ30)
PO9389	23-Sep-97	Image Creation Method and Apparatus (IJ31)
PO9391	23-Sep-97	Image Creation Method and Apparatus (IJ32)
PP0888	12-Dec-97	Image Creation Method and Apparatus (IJ33)
PP0891	12-Dec-97	Image Creation Method and Apparatus (IJ34)
PP0890	12-Dec-97	Image Creation Method and Apparatus (IJ35)
PP0873	12-Dec-97	Image Creation Method and Apparatus (IJ36)
PP0993	12-Dec-97	Image Creation Method and Apparatus (IJ37)
PP0890	12-Dec-97	Image Creation Method and Apparatus (IJ38)
PP1398	19-Jan-98	An Image Creation Method and Apparatus (IJ39)
PP2592	25-Mar-98	An Image Creation Method and Apparatus (IJ40)
PP2593	25-Mar-98	Image Creation Method and Apparatus (IJ41)
PP3991	9-Jun-98	Image Creation Method and Apparatus (IJ42)
PP3987	9-Jun-98	Image Creation Method and Apparatus (IJ43)
PP3985	9-Jun-98	Image Creation Method and Apparatus (IJ44)
PP3983	9-Jun-98	Image Creation Method and Apparatus (IJ45)

Ink Jet Manufacturing

Further, the present application may utilize advanced semiconductor fabrication techniques in the construction of large arrays of ink jet printers. Suitable manufacturing techniques are described in the following Australian provisional patent specifications incorporated here by cross-reference:

Australian Provisional Number	Filing Date	Title
PO7935	15-Jul-97	A Method of Manufacture of an Image Creation Apparatus (IJM01)
PO7936	15-Jul-97	A Method of Manufacture of an Image Creatiom Apparatus (IJM02)
PO7937	15-Jul-97	A Method of Manufacture of an Image Creation Apparatus (IJM03)
PO8061	15-Jul-97	A Method.of Manufacture of an Image Creation Apparatus (IJM04)
PO8054	15-Jul-97	A Method of Manufacture of an Image Creation Apparatus (IJM05)
PO8065	15-Jul-97	A Method of Manufacture of an Image Creation Apparatus (IJM06)
PO8055	15-Jul-97	A Method of Manufacture of an Image Creation Apparatus (IJM07)
PO8053	15-Jul-97	A Method of Manufacture of an Image Creation Apparatus (IJM08)
PO8078	15-Jul-97	A Method of Manufacture of an Image Creation Apparatus (IJM09)
PO7933	15-Jul-97	A Method of Manufacture of an Image Creation Apparatus (IJM10)
PO7950	15-Jul-97	A Method of Manufacture of an Image Creation Apparatus (IJM11)
PO7949	15-Jul-97	A Method of Manufacture of an Image Creation Apparatus (IJM12)
PO8060	15-Jul-97	A Method of Manufacture of an Image Creation Apparatus (IJM13)
PO8059	15-Jul-97	A Method of Manufacture of an Image Creation Apparatus (IJM14)
PO8073	15-Jul-97	A Method of Manufacture of an Image Creation Apparatus (IJM15)
PO8076	15-Jul-97	A Method of Manufacture of an Image Creation Apparatus (IJM16)
PO8075	15-Jul-97	A Method of Manufacture of an Image Creation Apparatus (IJM17)
PO8079	15-Jul-97	A Method of Manufacture of an Image Creation Apparatus (IJM18)

-continued

Australian Provisional Number	Filing Date	Title
PO8050	15-Jul-97	A Method of Manufacture of an Image Creation Apparatus (IJM19)
PO8052	15-Jul-97	A Method of Manufacture of an Image Creation Apparatus (IJM20)
PO7948	15-Jul-97	A Method of Manufacture of an Image Creation Apparatus (IJM21)
PO7951	15-Jul-97	A Method of Manufacture of an Image Creation Apparatus (IJM22)
PO8074	15-Jul-97	A Method of Manufacture of an Image Creation Apparatus (IJM23)
PO7941	15-Jul-97	A Method of Manufacture of an Image Creation Apparatus (IJM24)
PO8077	15-Jul-97	A Method of Manufacture of an Image Creation Apparatus (IJM25)
PO8058	15-Jul-97	A Method of Manufacture of an Image Creation Apparatus (IJM26)
PO8051	15-Jul-97	A Method of Manufacture of an Image Creation Apparatus (IJM27)
PO8045	15-Jul-97	A Method of Manufacture of an Image Creation Apparatus (IJM28)
PO7952	15-Jul-97	A Method of Manufacture of an Image Creation Apparatus (IJM29)
PO8046	15-Jul-97	A Method of Manufacture of an Image Creation Apparatus (IJM30)
PO8503	11-Aug-97	A Method of Manufacture of an Image Creation Apparatus (IJM30a)
PO9390	23-Sep-97	A Method of Manufacture of an Image Creation Apparatus (IJM31)
PO9392	23-Sep-97	A Method of Manufacture of an Image Creation Apparatus (IJM32)
PP0889	12-Dec-97	A Method of Manufacture of an Image Creation Apparatus (IJM35)
PP0887	12-Dec-97	A Method of Manufacture of an Image Creation Apparatus (IJM36)
PP0882	12-Dec-97	A Method of Manufacture of an Image Creation Apparatus (IJM37)
PP0874	12-Dec-97	A Method of Manufacture of an Image Creation Apparatus (IJM38)
PP1396	19-Jan-98	A Method of Manufacture of an Image Creation Apparatus (IJM39)
PP2591	25-Mar-98	A Method of Manufacture of an Image Creation Apparatus (IJM41)
PP3989	9-Jun-98	A Method of Manufacture of an Image Creation Apparatus (IJM40)
PP3990	9-Jun-98	A Method of Manufacture of an Image Creation Apparatus (IJM42)
PP3986	9-Jun-98	A Method of Manufacture of an Image Creation Apparatus (IJM43)
PP3984	9-Jun-98	A Method of Manufacture of an Image Creation Apparatus (IJM44)
PP3982	9-Jun-98	A Method of Manufacture of an Image Creation Apparatus (IJM45)

Fluid Supply

Further, the present application may utilize an ink delivery system to the ink jet head. Delivery systems relating to the supply of ink to a series of ink jet nozzles are described in the following Australian provisional patent specifications, the disclosure of which are hereby incorporated by cross-reference:

Australian Provisional Number	Filing Date	Title
PO8003	15-Jul-97	Supply Method and Apparatus (F1)
PO8005	15-Jul-97	Supply Method and Apparatus (F2)
PO9404	23-Sep-97	A Device and Method (F3)

MEMS Technology

Further, the present application may utilize advanced semiconductor microelectromechanical techniques in the

construction of large arrays of ink jet printers. Suitable microelectromechanical techniques are described in the following Australian provisional patent specifications incorporated here by cross-reference:

Australian Provisional Number	Filing Date	Title
PO7943	15-Jul-97	A device (MEMS01)
PO8006	15-Jul-97	A device (MEMS02)
PO8007	15-Jul-97	A device (MEMS03)
PO8008	15-Jul-97	A device (MEMS04)
PO8010	15-Jul-97	A device (MEMS05)
PO8011	15-Jul-97	A device (MEMS06)
PO7947	15-Jul-97	A device (MEMS07)
PO7945	15-Jul-97	A device (MEMS08)
PO7944	15-Jul-97	A device (MEMS09)
PO7946	15-Jul-97	A device (MEMS10)
PO9393	23-Sep-97	A Device and Method (MEMS11)
PP0875	12-Dec-97	A Device (MEMS12)
PP0894	12-Dec-97	A Device and Method (MEMS13)

IR Technologies

Further, the present application may include the utilization of a disposable camera system such as those described in the following Australian provisional patent specifications incorporated here by cross-reference:

Australian Provisional Number	Filing Date	Title
PPO895	12-Dec-97	An Image Creation Method and Apparatus (IR01)
PP0870	12-Dec-97	A Device and Method (IR02)
PP0869	12-Dec-97	A Device and Method (IR04)
PP0887	12-Dec-97	Image Creation Method and Apparatus (IR05)
PP0885	12-Dec-97	An Image Production System (IR06)
PP0884	12-Dec-97	Image Creation Method and Apparatus (IR10)
PP0886	12-Dec-97	Image Creation Method and Apparatus (IR12)
PP0871	12-Dec-97	A Device and Method (IR13)
PP0876	12-Dec-97	An Image Processing Method and Apparatus (IR14)
PP0877	12-Dec-97	A Device and Method (IR16)
PP0878	12-Dec-97	A Device and Method (IR17)
PP0879	12-Dec-97	A Device and Method (IR18)
PP0883	12-Dec-97	A Device and Method (IR19)
PP0880	12-Dec-97	A Device and Method (IR20)
PP0881	12-Dec-97	A Device and Method (IR21)

DotCard Technologies

Further, the present application may include the utilization of a data distribution system such as that described in the following Australian provisional patent specifications incorporated here by cross-reference:

Australian Provisional Number	Filing Date	Title
PP2370	16-Mar-98	Data Processing Method and Apparatus (Dot01)

-continued

PP2371	16-Mar-98	Data Processing Method and Apparatus (Dot02)

Artcam Technologies

Further, the present application may include the utilization of camera and data processing techniques such as an Artcam type device as described in the following Australian provisional patent specifications incorporated here by cross-reference:

Australian Provisional Number	Filing Date	Title
PO7991	15-Jul-97	Image Processing Method and Apparatus (ART01)
PO8505	11-Aug-97	Image Processing Method and Apparatus (ART01a)
PO7988	15-Jul-97	Image Processing Method and Apparatus (ART02)
PO7993	15-Jul-97	Image Processing Method and Apparatus (ART03)
PO8012	15-Jul-97	Image Processing Method and Apparatus (ART05)
PO8017	15-Jul-97	Image Processing Method and Apparatus (ART06)
PO8014	15-Jul-97	Media Device (ART07)
PO8025	15-Jul-97	Image Processing Method and Apparatus (ART08)
PO8032	15-Jul-97	Image Processing Method and Apparatus (ART09)
PO7999	15-Jul-97	Image Processing Method and Apparatus (ART10)
PO7998	15-Jul-97	Image Processing Method and Apparatus (ART11)
PO8031	15-Jul-97	Image Processing Method and Apparatus (ART12)
PO8030	15-Jul-97	Media Device (ART13)
PO8498	11-Aug-97	Image Processing Method and Apparatus (ART14)
PO7997	15-Jul-97	Media Device (ART15)
PO7979	15-Jul-97	Media Device (ART16)
PO8015	15-Jul-97	Media Device (ART17)
PO7978	15-Jul-97	Media Device (ART18)
PO7982	15-Jul-97	Data Processing Method and Apparatus (ART19)
PO7989	15-Jul-97	Data Processing Method and Apparatus (ART20)
PO8019	15-Jul-97	Media Processing Method and Apparatus (ART21)
PO7980	15-Jul-97	Image Processing Method and Apparatus (ART22)
PO7942	15-Jul-97	Image Processing Method and Apparatus (ART23)
PO8018	15-Jul-97	Image Processing Method and Apparatus (ART24)
PO7938	15-Jul-97	Image Processing Method and Apparatus (ART25)
PO8016	15-Jul-97	Image Processing Method and Apparatus (ART26)
PO8024	15-Jul-97	Image Processing Method and Apparatus (ART27)
PO7940	15-Jul-97	Data Processing Method and Apparatus (ART28)
PO7939	15-Jul-97	Data Processing Method and Apparatus (ART29)
PO8501	11-Aug-97	Image Processing Method and Apparatus (ART30)
PO8500	11-Aug-97	Image Processing Method and Apparatus (ART31)
PO7987	15-Jul-97	Data Processing Method and Apparatus (ART32)

-continued

Australian Provisional Number	Filing Date	Title
PO8022	15-Jul-97	Image Processing Method and Apparatus (ART33)
PO8497	11-Aug-97	Image Processing Method and Apparatus (ART30)
PO8029	15-Jul-97	Sensor Creation Method and Apparatus (ART36)
PO7985	15-Jul-97	Data Processing Method and Apparatus (ART37)
PO8020	15-Jul-97	Data Processing Method and Apparatus (ART38)
PO8023	15-Jul-97	Data Processing Method and Apparatus (ART39)
PO9395	23-Sep-97	Data Processing Method and Apparatus (ART4)
PO8021	15-Jul-97	Data Processing Method and Apparatus (ART40)
PO8504	11-Aug-97	Image Processing Method and Apparatus (ART42)
PO8000	15-Jul-97	Data Processing Method and Apparatus (ART43)
PO7977	15-Ju1-97	Data Processing Method and Apparatus (ART44)
PO7934	15-Jul-97	Data Processing Method and Apparatus (ART45)
PO7990	15-Jul-97	Data Processing Method and Apparatus (ART46)
PO8499	11-Aug-97	Image Processing Method and Apparatus (ART47)
PO8502	11-Aug-97	Image Processing Method and Apparatus (ART48)
PO7981	15-Jul-97	Data Processing Method and Apparatus (ART50)
PO7986	15-Jul-97	Data Processing Method and Apparatus (ART51)
PO7983	15-Jul-97	Data Processing Method and Apparatus (ART52)
PO8026	15-Jul-97	Image Processing Method and Apparatus (ART53)
PO8027	15-Jul-97	Image Processing Method and Apparatus (ART54)
PO8028	15-Jul-97	Image Processing Method and Apparatus (ART56)
PO9394	23-Sep-97	Image Processing Method and Apparatus (ART57)
PO9396	23-Sep-97	Data Processing Method and Apparatus (ART58)
PO9397	23-Sep-97	Data Processing Method and Apparatus (ART59)
PO9398	23-Sep-97	Data Processing Method and Apparatus (ART60)
PO9399	23-Sep-97	Data Processing Method and Apparatus (ART61)
PO9400	23-Sep-97	Data Processing Method and Apparatus (ART62)
PO9401	23-Sep-97	Data Processing Method and Apparatus (ART63)
PO9402	23-Sep-97	Data Processing Method and Apparatus (ART64)

-continued

Australian Provisional Number	Filing Date	Title
PO9403	23-Sep-97	Data Processing Method and Apparatus (ART65)
PO9405	23-Sep-97	Data Processing Method and Apparatus (ART66)
PPO959	16-Dec-97	A Data Processing Method and Apparatus (ART68)
PP1397	19-Jan-98	A Media Device (ART69)

I claim:

1. A camera system comprising:

an image sensor and processing device for sensing and processing an image;

a print media supply means provided for the storage of print media;

a print head for printing said sensed image on print media stored internally to said camera system;

said image sensor and processing device comprising a single integrated circuit chip including the following interconnected components:

a processing unit for controlling the operation of said camera system;

a program ROM utilized by said processing unit;

a CMOS pixel image sensor for sensing said image;

a memory store for storing images and associated program data;

a series of motor drive units each including motor drive transistors for the driving of external mechanical system of said camera system; and

print head interface unit for driving said print head for printing of said sensed image.

2. A system as claimed in claim **1** wherein said motor drive transistors are located along one peripheral edge of said integrated circuit and said CMOS pixel image sensor is located along an opposite edge of said integrated circuit.

3. A system as claimed in claim **1** wherein said image sensor and processing device further includes a halftoning unit for halftoning said sensed image into corresponding bi-level pixel elements for printing out by said print head.

4. A system as claimed in claim **2** wherein said halftoning unit implements a dither operation and includes a halftone matrix ROM utilized by said halftoning unit in performing said halftoning operation.

5. A system as claimed in claim **1** wherein said motor drive transistors are only operated whilst said image sensor is non-operational.

* * * * *