US 20020077170A1

(19) United States

(12) Patent Application Publication (10) Pub. No.: US 2002/0077170 A1

Johnson et al. (43) Pub. Date: Jun. 20, 2002

(54) VIDEO TABLE GAME APPARATUS, SYSTEM, AND METHOD OF USE

(76) Inventors: **Bradley W. Johnson**, Las Vegas, NV (US); **Vaughn D. Place**, Las Vegas, NV (US); **Andrew Trzeciak**, Algonquin, IL (US)

Correspondence Address:
IAN F. BURNS
P O BOX 20038
RENO, NV 89515 (US)

(21) Appl. No.: **10/026,289**

(22) Filed: **Dec. 19, 2001**

Related U.S. Application Data

(63) Non-provisional of provisional application No. 60/256,363, filed on Dec. 19, 2000. Non-provisional of provisional application No. 60/326,434, filed on Oct. 1, 2001.

Publication Classification

(51) **Int. Cl.**[7] **A63F 13/00**

(52) **U.S. Cl.** **463/16**; 463/11; 463/30; 463/36; 463/42

(57) **ABSTRACT**

Disclosed are stand-alone and networked game table video or entertainment system for use in conjunction with a primary or underlying table game. The system includes a video display, and table interface device, and a player input device associated with one or more game tables. The video display, table interface device, and player interface device communicate via a computer, which cooperatively provide video, audio, text, or images on the video display and provide the game player with the opportunity to play a side wager or secondary game of chance at the game table. The system may be used to also provide other types of video content, such as attract mode video, conventional TV or cable channels, audio entertainment, and text or image banner information or advertisements.

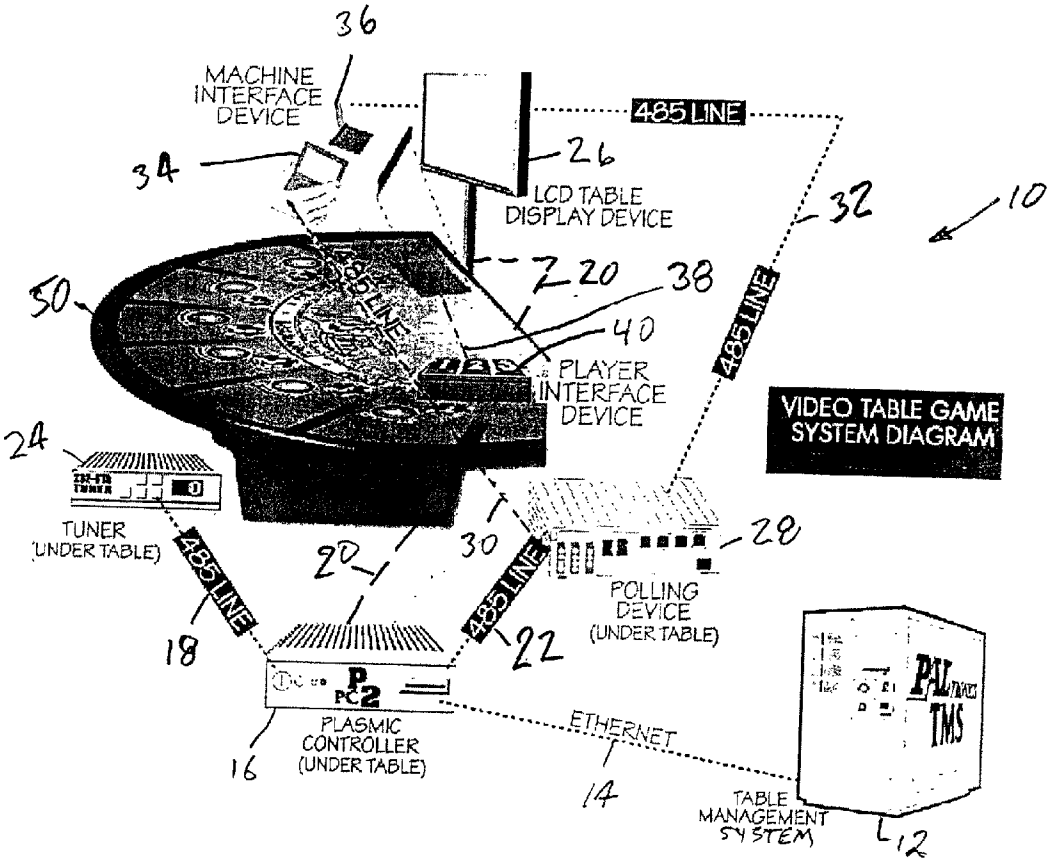

System Diagram

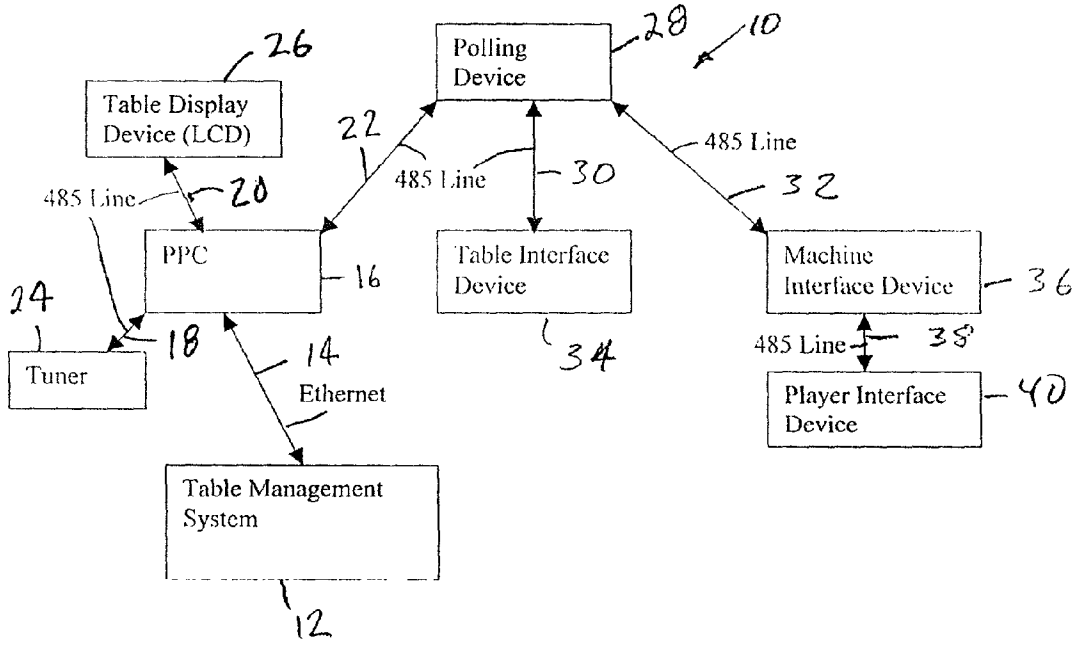

Fig 1

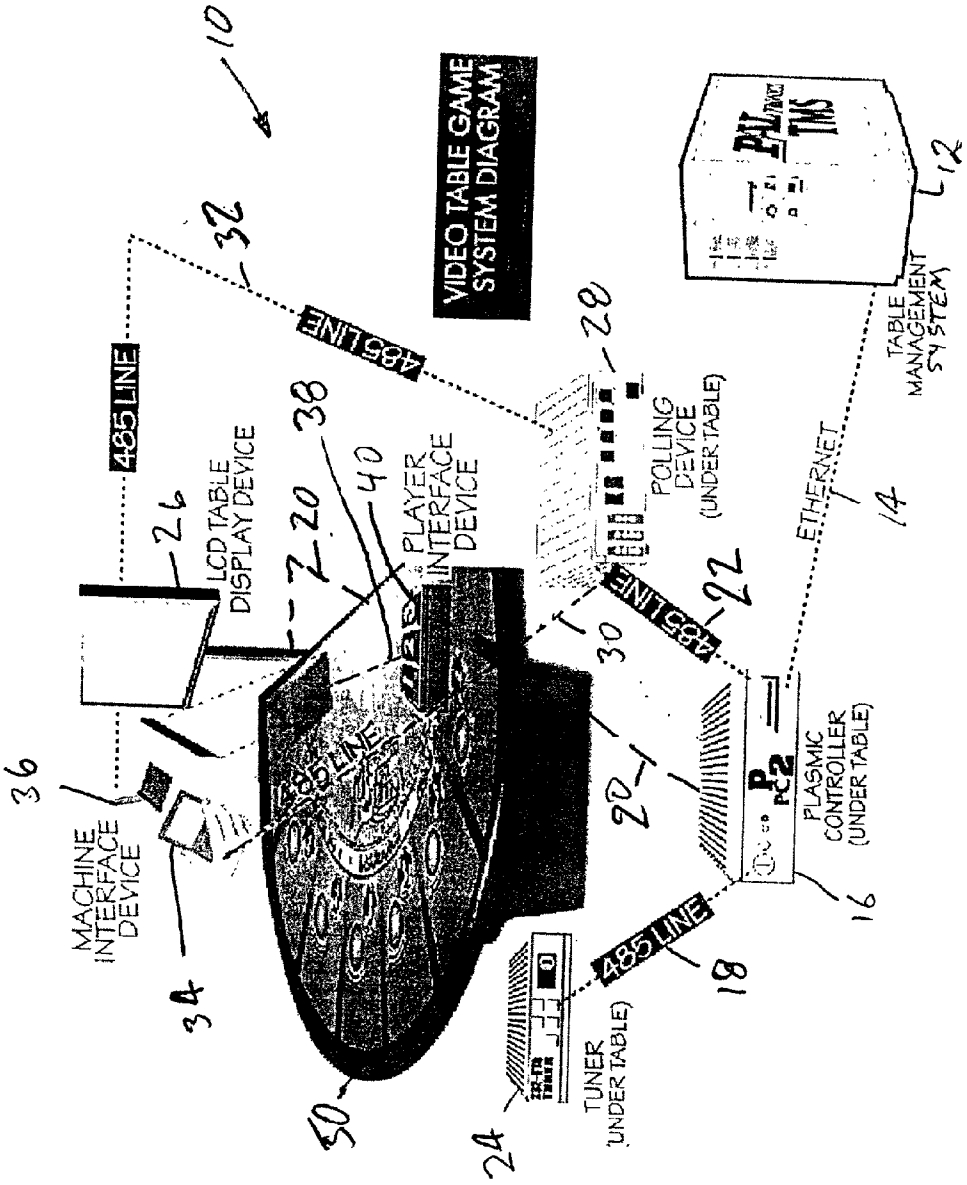
VIDEO TABLE GAME SYSTEM DIAGRAM
485 LINE
485 LINE
485 LINE
485 LINE
485 LINE
LCD TABLE DISPLAY DEVICE
PLAYER INTERFACE DEVICE
POLLING DEVICE (UNDER TABLE)
ETHERNET
TABLE MANAGEMENT SYSTEM
MACHINE INTERFACE DEVICE
PLASMIC CONTROLLER (UNDER TABLE)
TUNER (UNDER TABLE)
10
12
14
16
18
20
22
24
26
28
30
32
34
36
38
40
50

Fig. 2

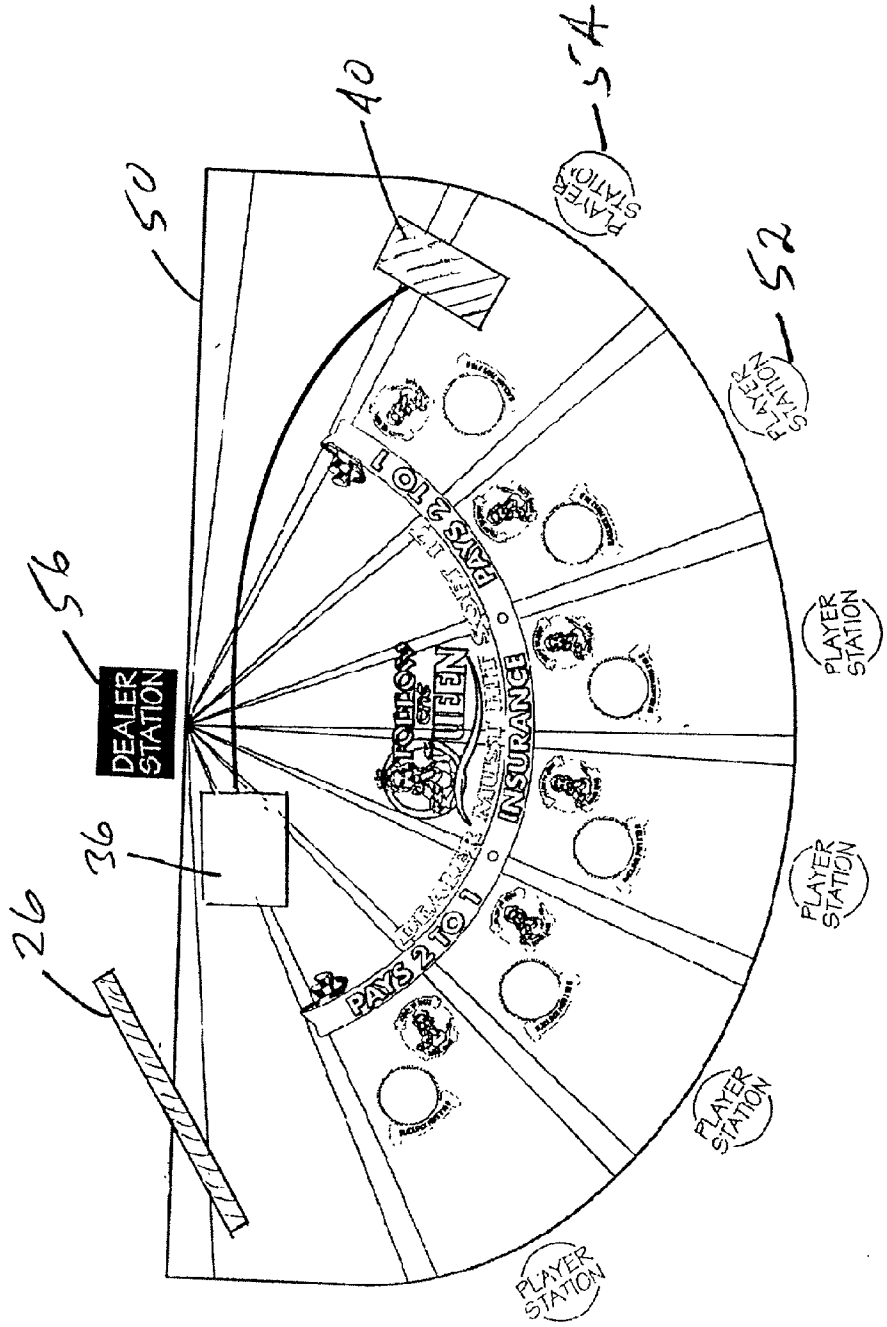
DEALER STATION
PAYS 2 TO 1
INSURANCE
PAYS 2 TO 1
PLAYER STATION
PLAYER STATION
PLAYER STATION
PLAYER STATION
PLAYER STATION
26
36
40
50
52
54
56

Fig. 3

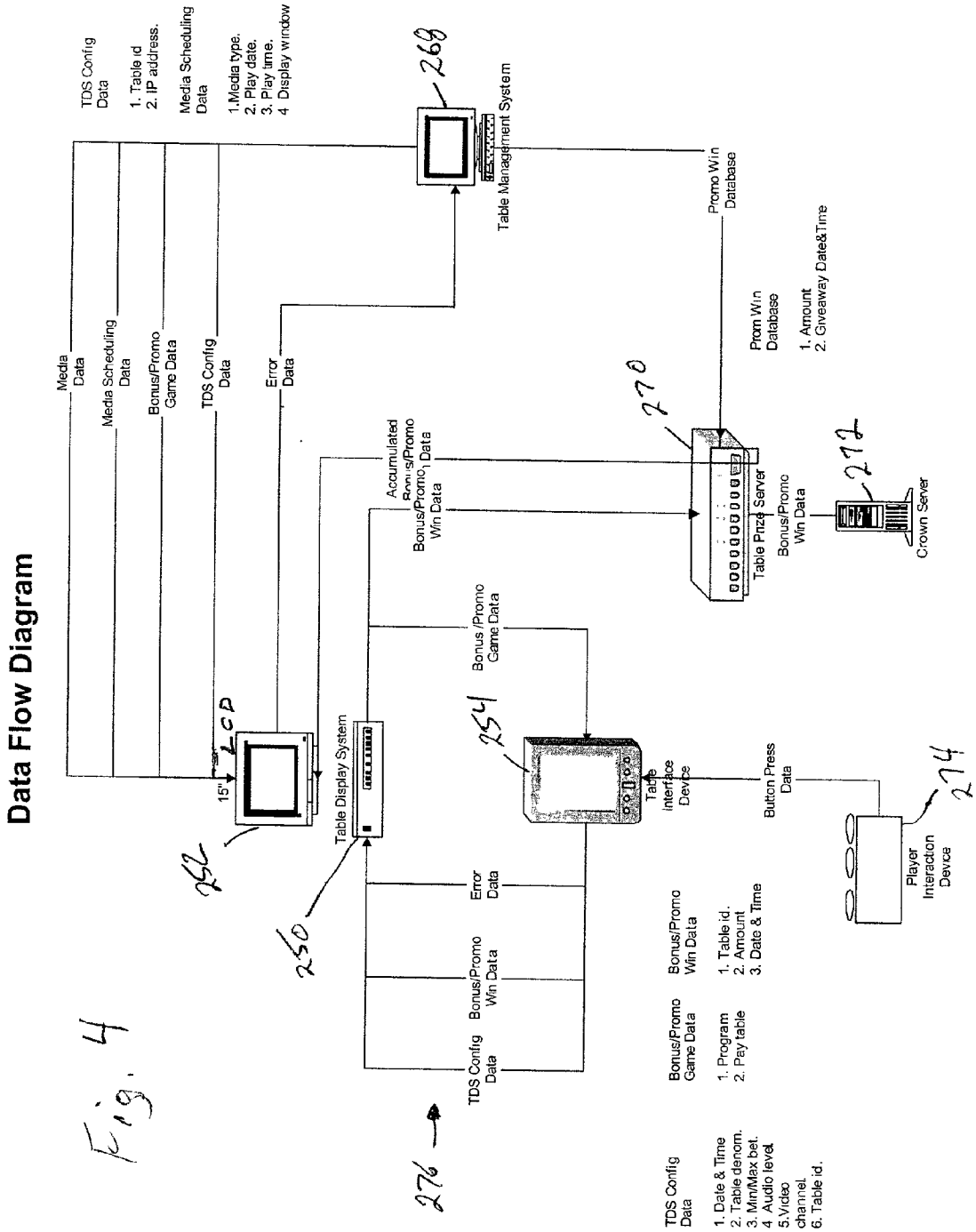
Data Flow Diagram
TDS Config Data
1. Table id
2. IP address.
Media Scheduling Data
1. Media type.
2. Play date.
3. Play time.
4 Display window
268
Table Management System
Promo Win Database
Media Data
Media Scheduling Data
Bonus/Promo Game Data
TDS Config Data
Error Data
Prom Win Database
1. Amount
2. Giveaway Date&Time
270
Accumulated Bonus/Promo Win Data
Bonus/Promo Win Data
Table Prize Server
272
Crown Sever
Bonus /Promo Game Data
254
LCD
15"
Table Display System
Table Interface Device
Button Press Data
252
250
Error Data
Bonus/Promo Win Data
TDS Config Data
276
Bonus/Promo Win Data
1. Table id.
2. Amount
3. Date & Time
Bonus/Promo Game Data
1. Program
2. Pay table
TDS Config Data
1. Date & Time
2. Table denom.
3. Min/Max bet.
4 Audio level.
5.Video channel.
6. Table id.
Player Interaction Device
274

Fig. 4

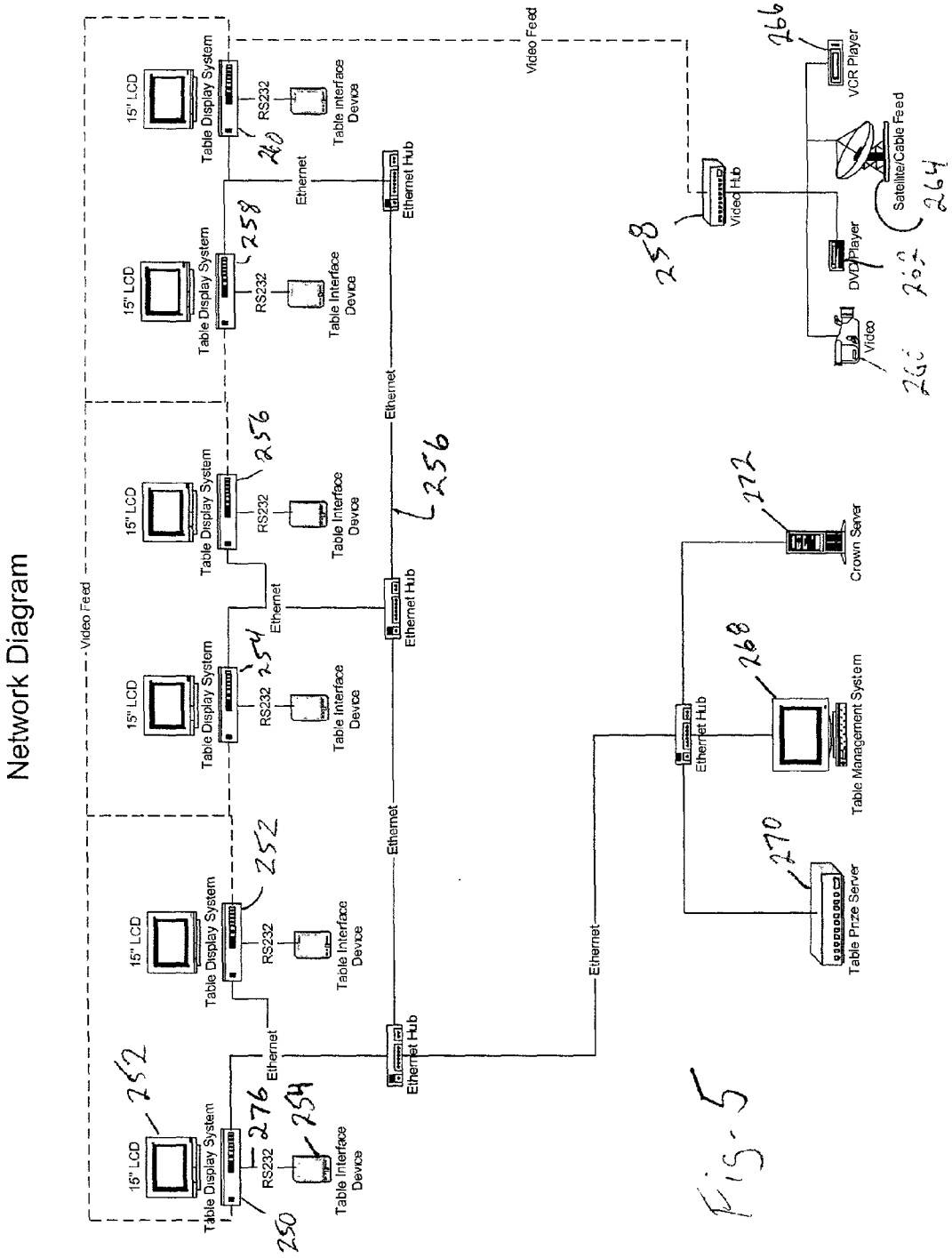
Network Diagram
Video Feed
15" LCD
Table Display System
RS232
Table Interface Device
Ethernet
Ethernet Hub
Video Hub
VCR Player
Satellite/Cable Feed
DVD Player
Video
Crown Server
Table Management System
Table Prize Server
250
252
254
256
258
260
262
264
266
268
270
272
276

FIG. 5

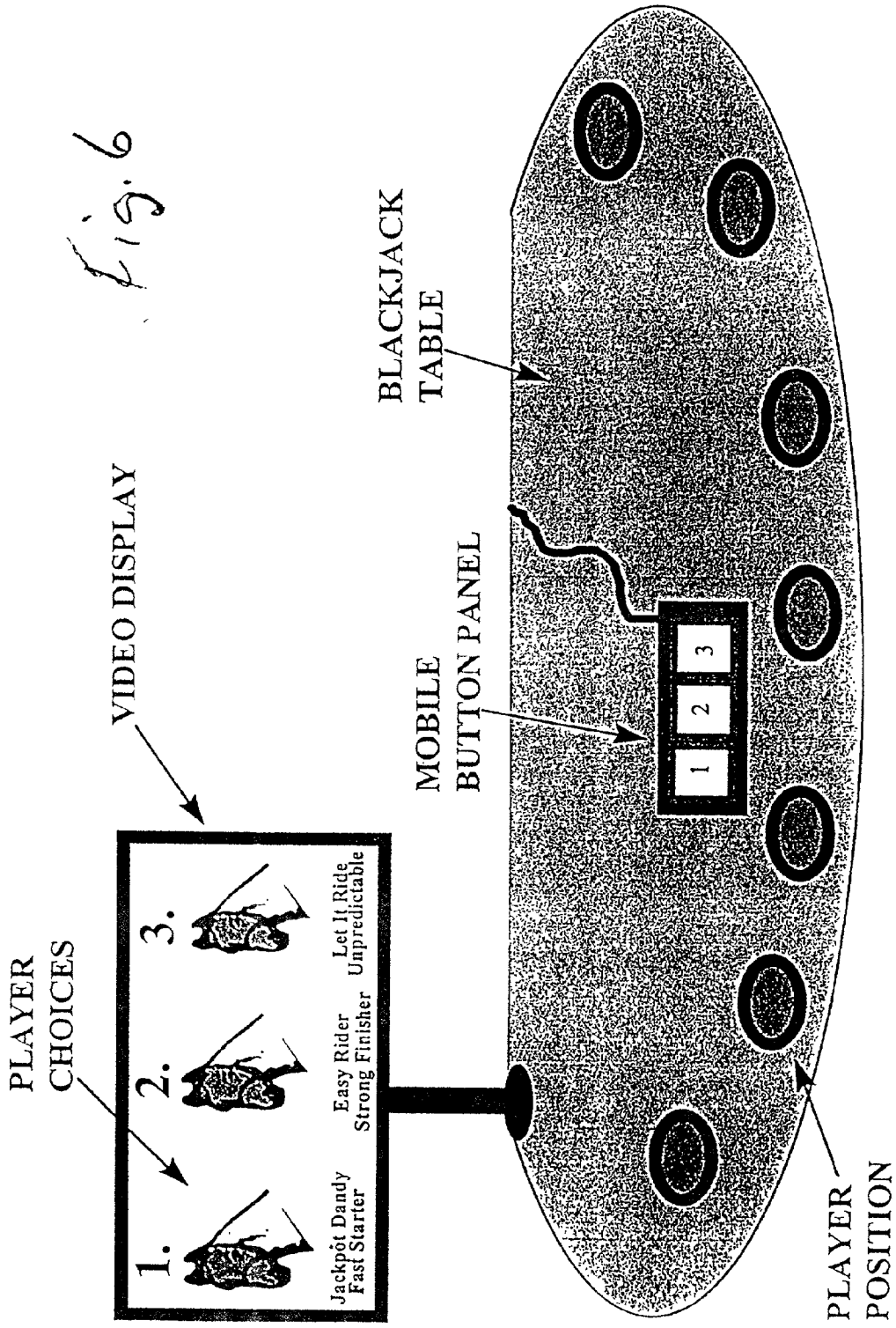
PLAYER CHOICES
VIDEO DISPLAY
1.
Jackpot Dandy
Fast Starter
2.
Easy Rider
Strong Finisher
3.
Let It Ride
Unpredictable
MOBILE BUTTON PANEL
1
2
3
BLACKJACK TABLE
PLAYER POSITION

Fig. 6

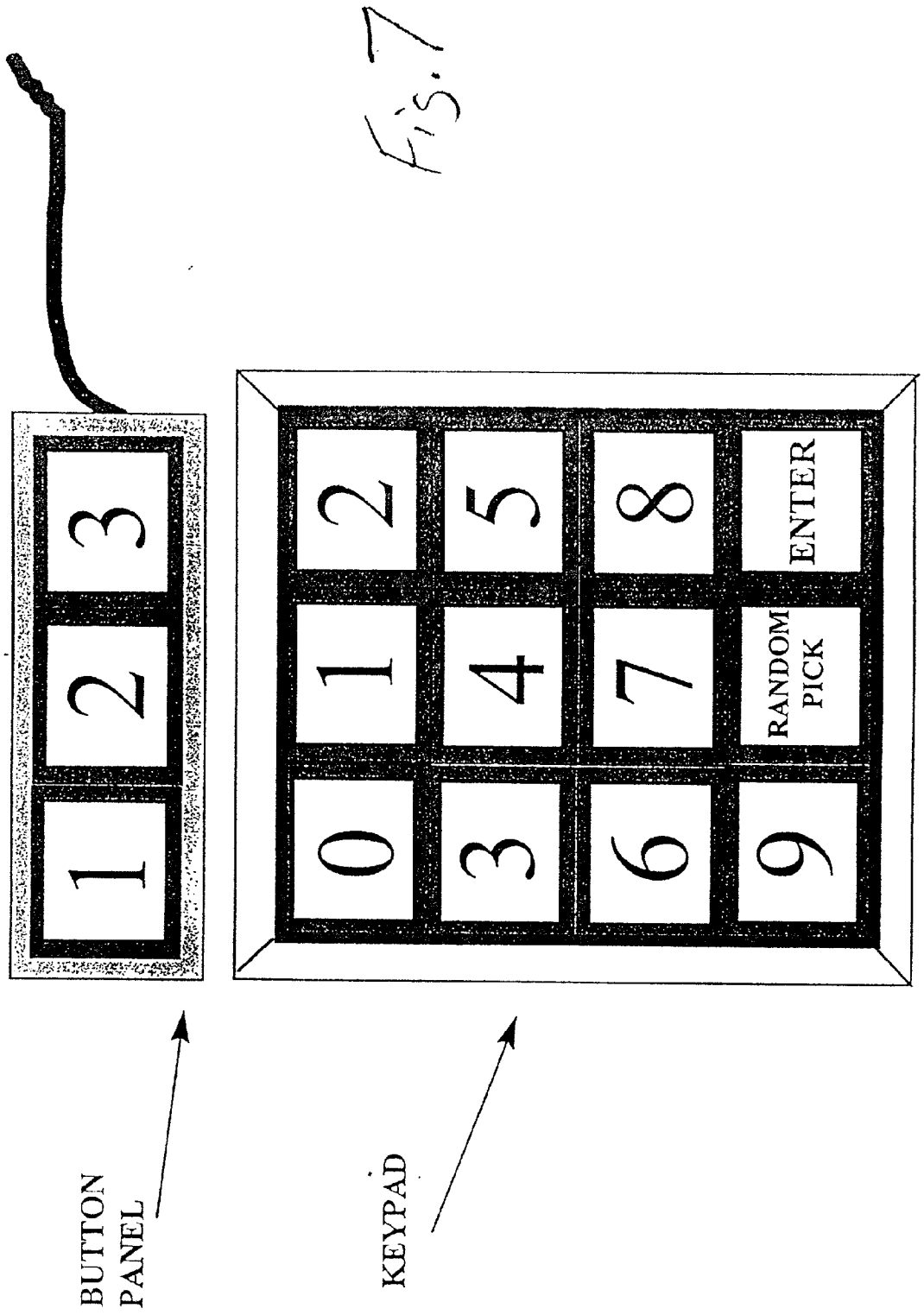

Fig. 7

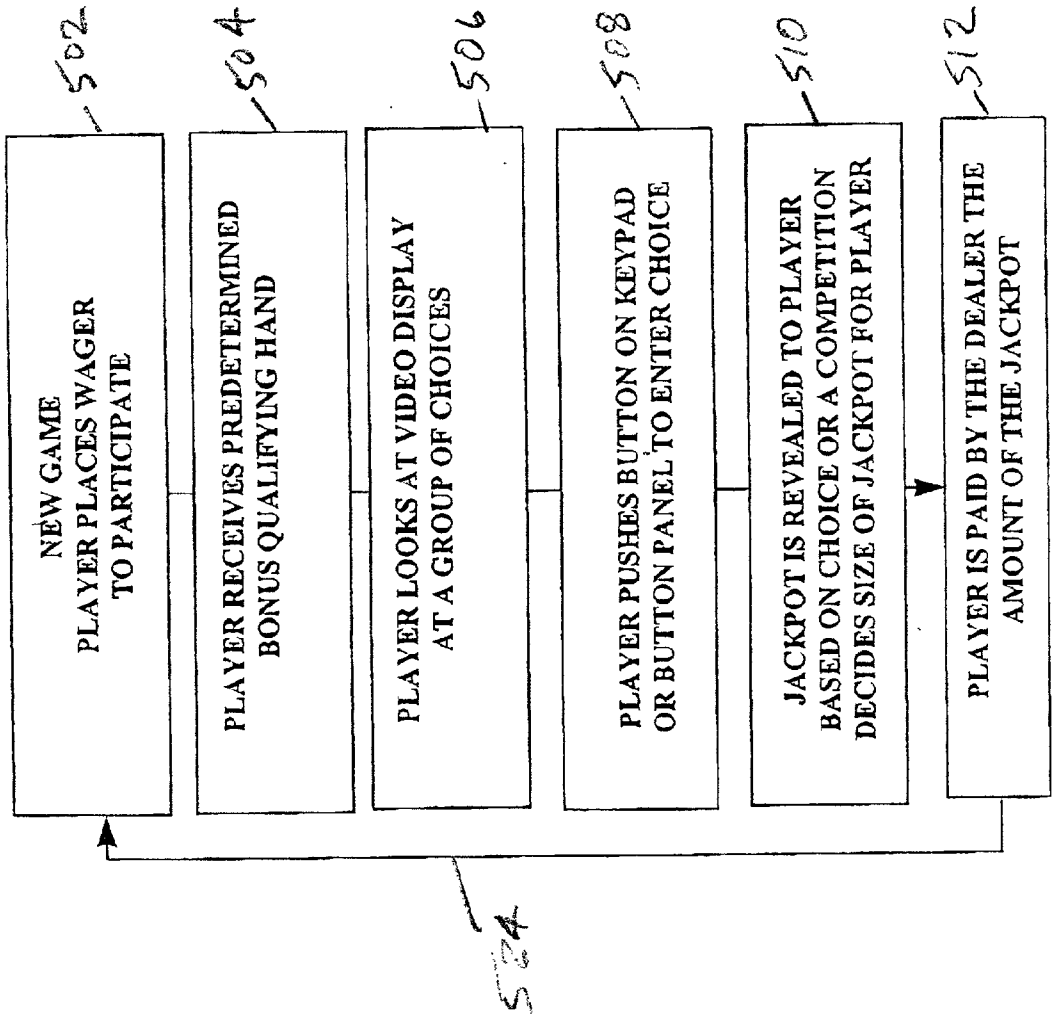
Fig. 8
502
NEW GAME
PLAYER PLACES WAGER
TO PARTICIPATE
504
PLAYER RECEIVES PREDETERMINED
BONUS QUALIFYING HAND
506
PLAYER LOOKS AT VIDEO DISPLAY
AT A GROUP OF CHOICES
508
PLAYER PUSHES BUTTON ON KEYPAD
OR BUTTON PANEL TO ENTER CHOICE
510
JACKPOT IS REVEALED TO PLAYER
BASED ON CHOICE OR A COMPETITION
DECIDES SIZE OF JACKPOT FOR PLAYER
512
PLAYER IS PAID BY THE DEALER THE
AMOUNT OF THE JACKPOT
524

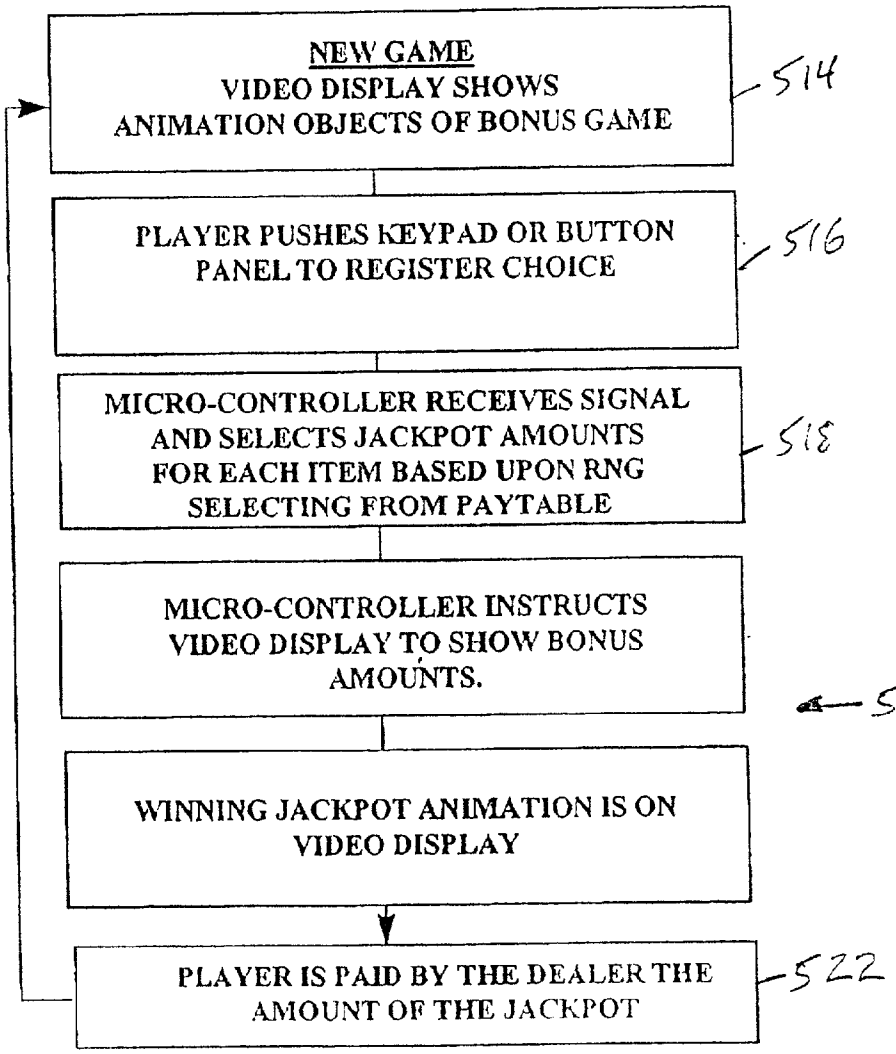
NEW GAME
VIDEO DISPLAY SHOWS
ANIMATION OBJECTS OF BONUS GAME
514
PLAYER PUSHES KEYPAD OR BUTTON
PANEL TO REGISTER CHOICE
516
MICRO-CONTROLLER RECEIVES SIGNAL
AND SELECTS JACKPOT AMOUNTS
FOR EACH ITEM BASED UPON RNG
SELECTING FROM PAYTABLE
518
MICRO-CONTROLLER INSTRUCTS
VIDEO DISPLAY TO SHOW BONUS
AMOUNTS.
520
WINNING JACKPOT ANIMATION IS ON
VIDEO DISPLAY
PLAYER IS PAID BY THE DEALER THE
AMOUNT OF THE JACKPOT
522

Fig. 9

Fig. 10

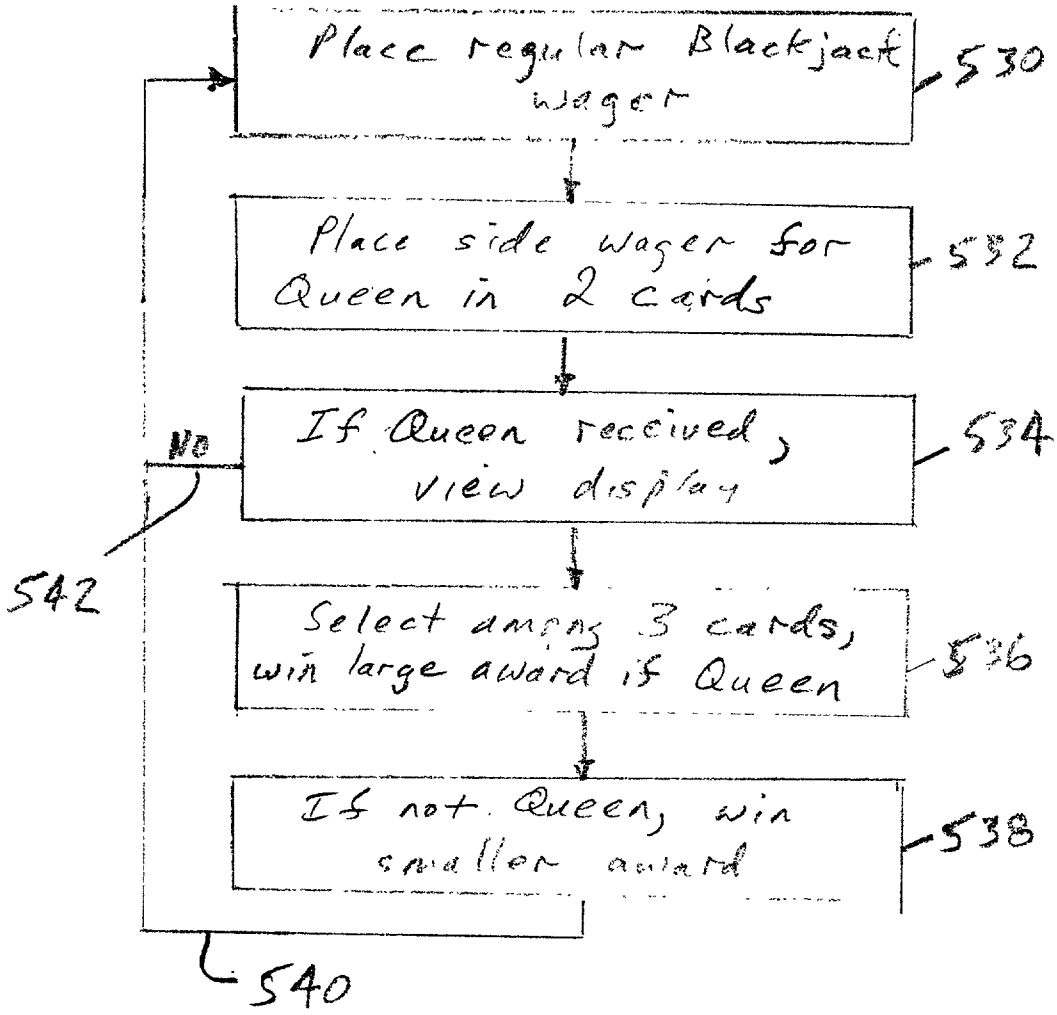
Place regular Blackjack wager
530
Place side wager for Queen in 2 cards
532
If Queen received, view display
534
No
542
Select among 3 cards, win large award if Queen
536
If not Queen, win smaller award
538
540

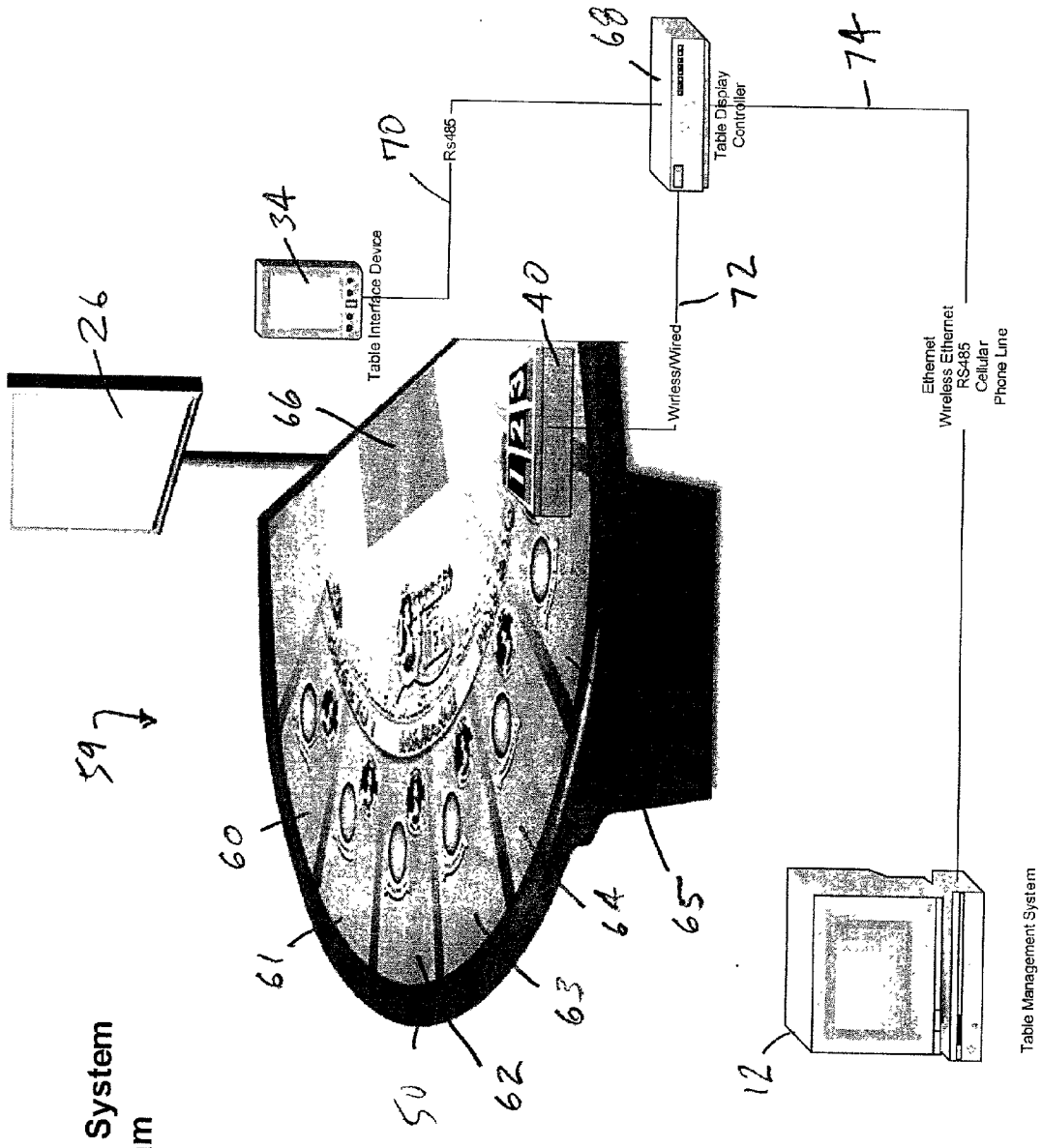
Video Table System
Diagram
Table Interface Device
Rs485
Table Display
Controller
Wirless/Wired
Ethernet
Wireless Ethernet
RS485
Cellular
Phone Line
Table Management System
26
34
40
50
59
60
61
62
63
64
65
66
68
70
72
74
12

Fig. 11

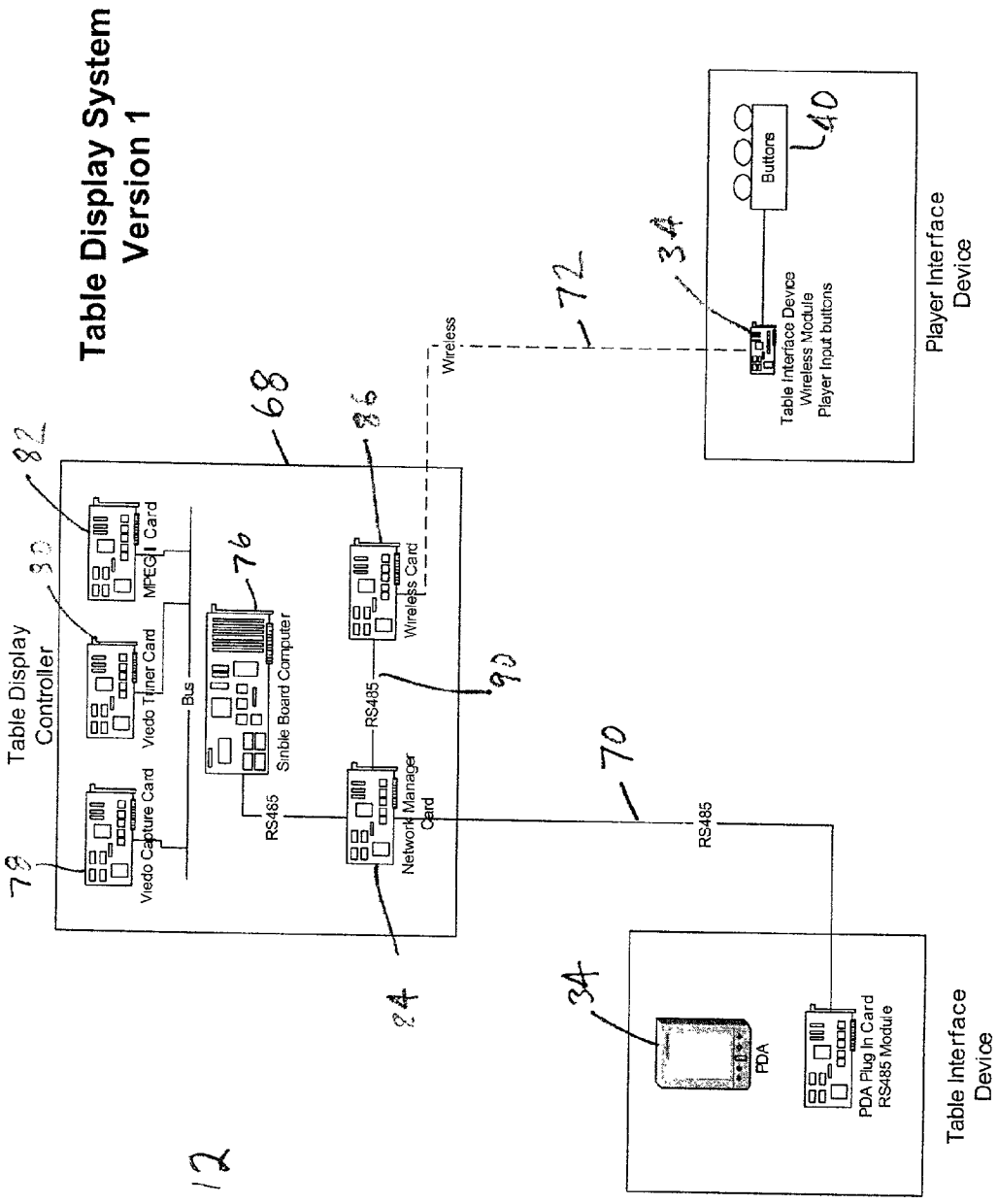
Table Display System
Version 1
Table Display
Controller
Viedo Capture Card
Viedo Tiner Card
MPEG II Card
Bus
Sinble Board Computer
RS485
Network Manager
Card
Wireless Card
RS485
Wireless
Table Interface Device
Wireless Module
Player Input buttons
Buttons
Player Interface
Device
RS485
PDA
PDA Plug In Card
RS485 Module
Table Interface
Device
68
70
72
76
78
80
82
84
86
90
34
40

Fig. 12

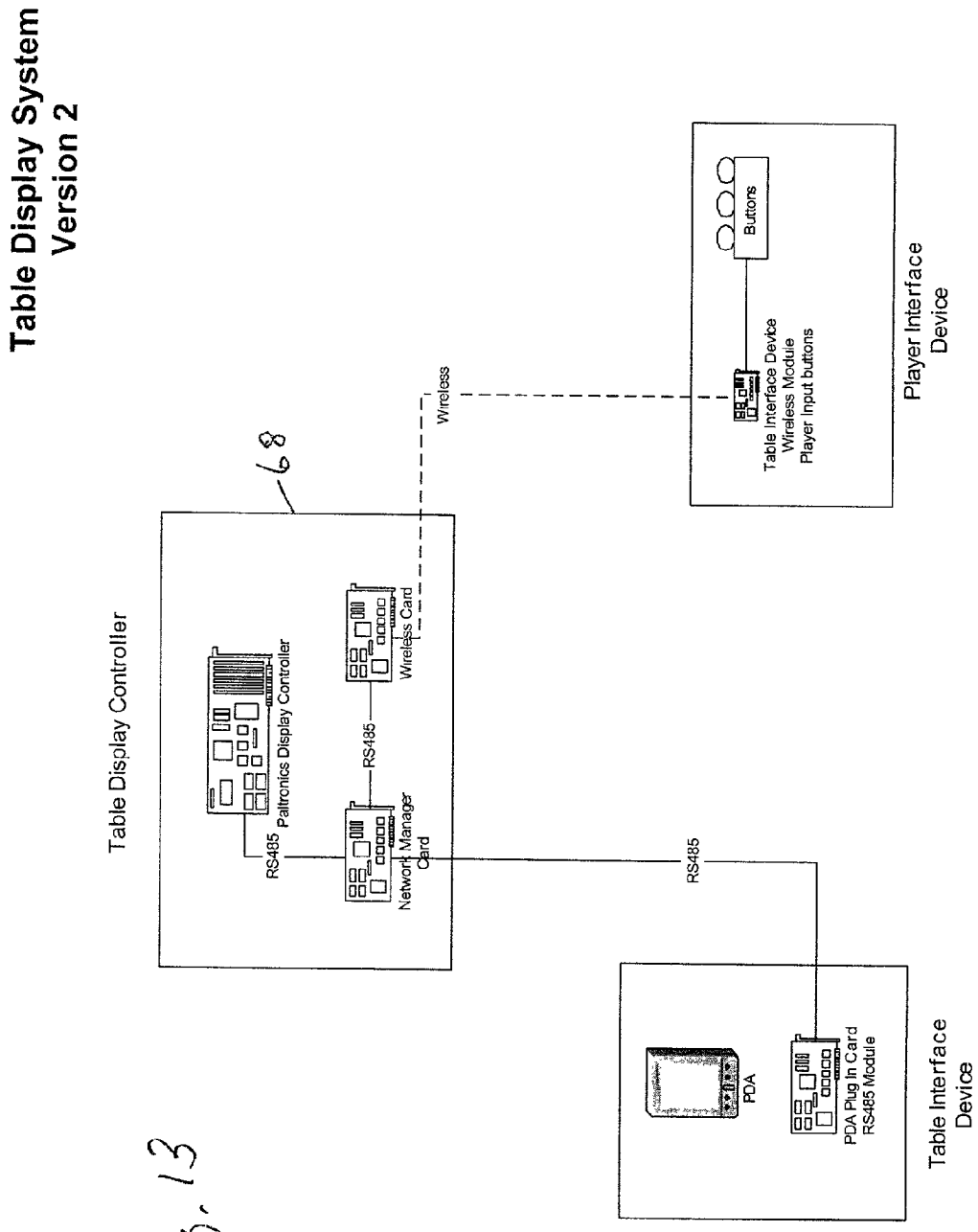
Table Display System
Version 2
Table Display Controller
68
Paltronics Display Controller
RS485
Network Manager
Card
RS485
Wireless Card
Wireless
Table Interface Device
Wireless Module
Player Input buttons
Buttons
Player Interface
Device
RS485
PDA
PDA Plug In Card
RS485 Module
Table Interface
Device

Fig. 13

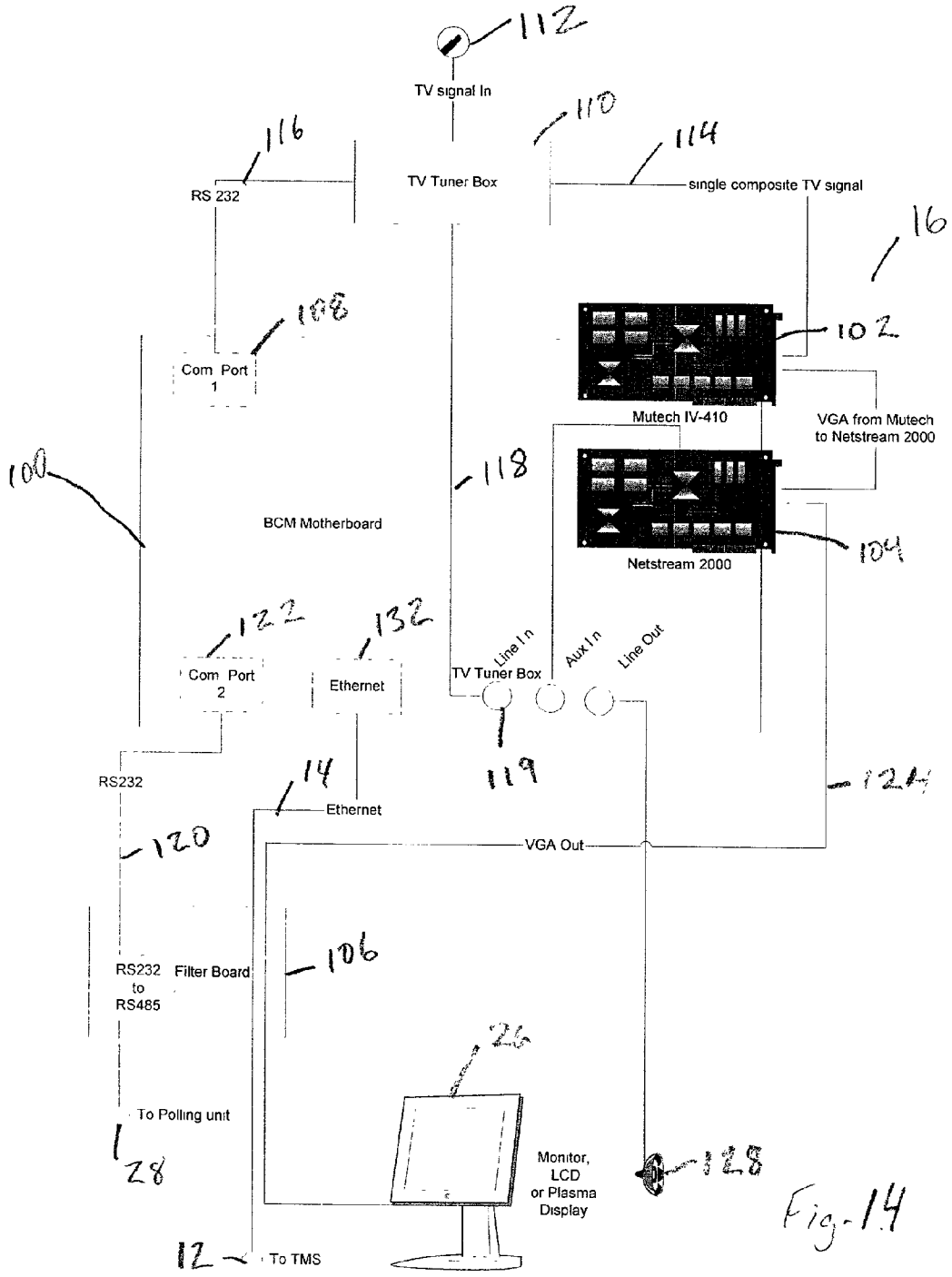
112
TV signal In
116
110
114
RS 232
TV Tuner Box
single composite TV signal
16
108
102
Com Port 1
Mutech IV-410
VGA from Mutech to Netstream 2000
100
118
BCM Motherboard
Netstream 2000
104
122
132
Com Port 2
Ethernet
TV Tuner Box
Line In
Aux In
Line Out
RS232
14
Ethernet
119
124
120
VGA Out
106
RS232 to RS485
Filter Board
26
To Polling unit
28
Monitor, LCD or Plasma Display
128
12
To TMS

Fig. 14

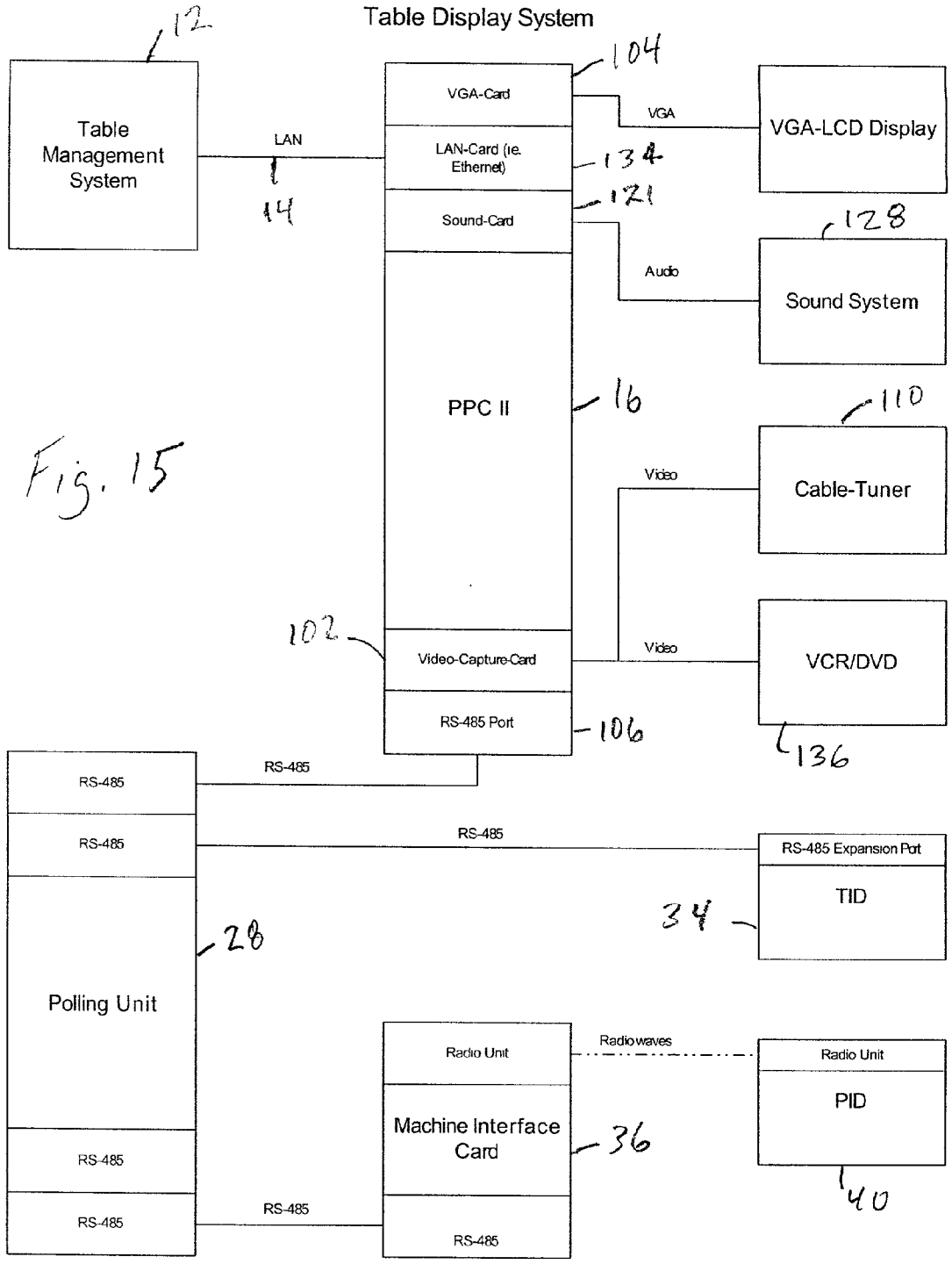
Table Display System
12
Table Management System
LAN
14
VGA-Card
LAN-Card (ie. Ethernet)
Sound-Card
PPC II
Video-Capture-Card
RS-485 Port
104
134
121
16
102
106
VGA
VGA-LCD Display
Audio
128
Sound System
110
Video
Cable-Tuner
Video
VCR/DVD
136
RS-485
RS-485
RS-485
RS-485
RS-485
RS-485
RS-485
RS-485 Expansion Port
TID
34
28
Polling Unit
Radio Unit
Machine Interface Card
RS-485
Radiowaves
Radio Unit
PID
36
40

Fig. 15

Table Input Device General Initialization

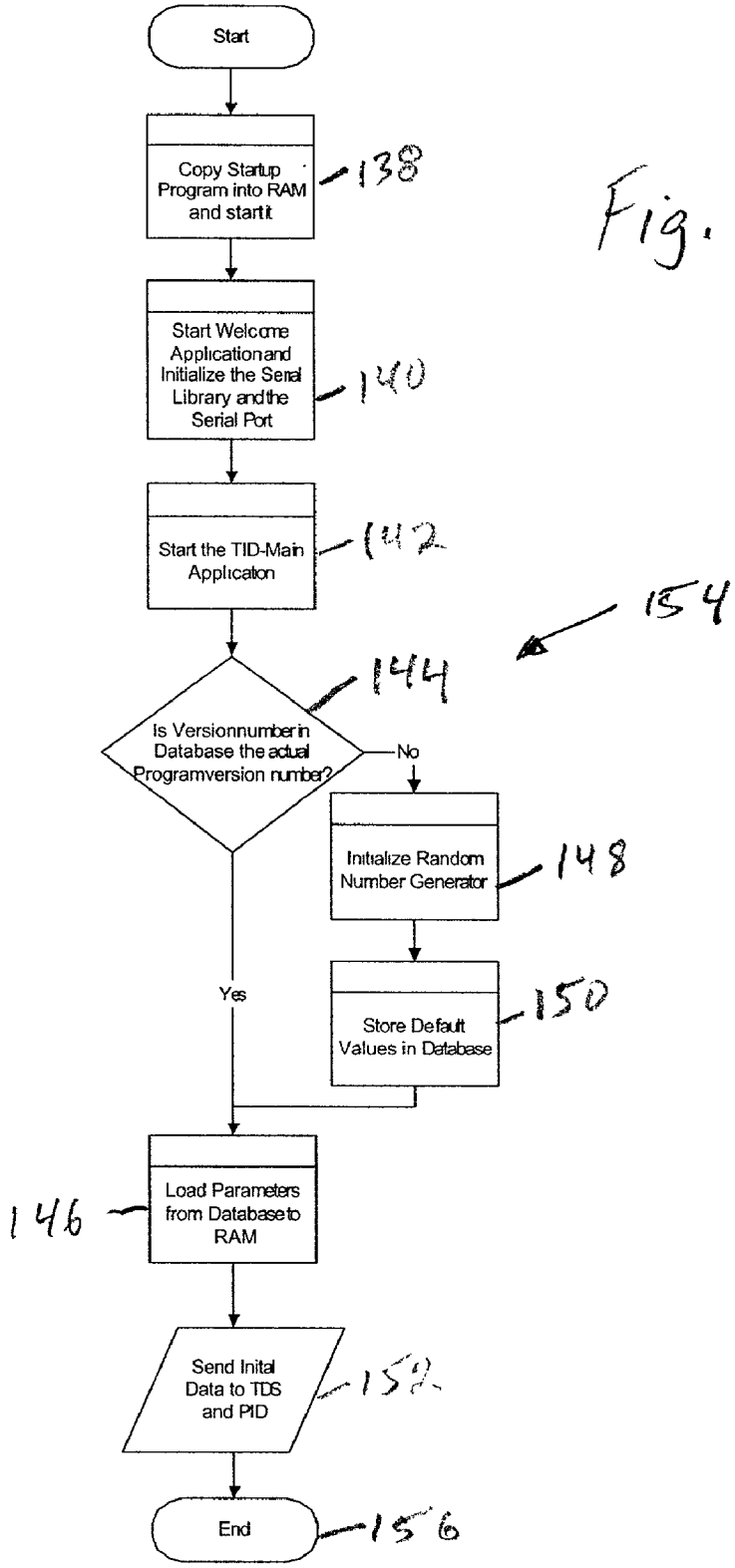

Fig. 16

Table Input Device User Interface

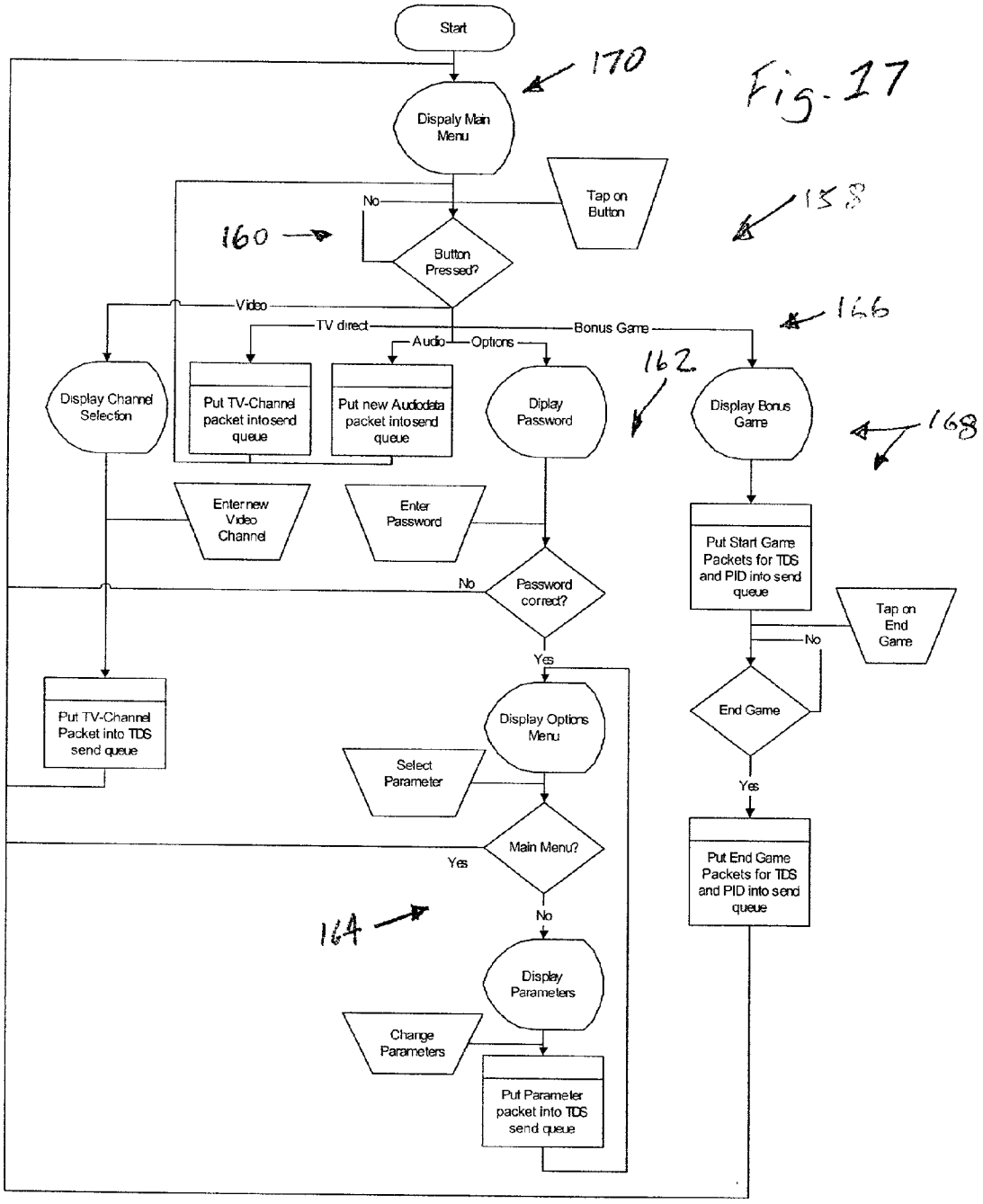

Table Input Device Serial Communication

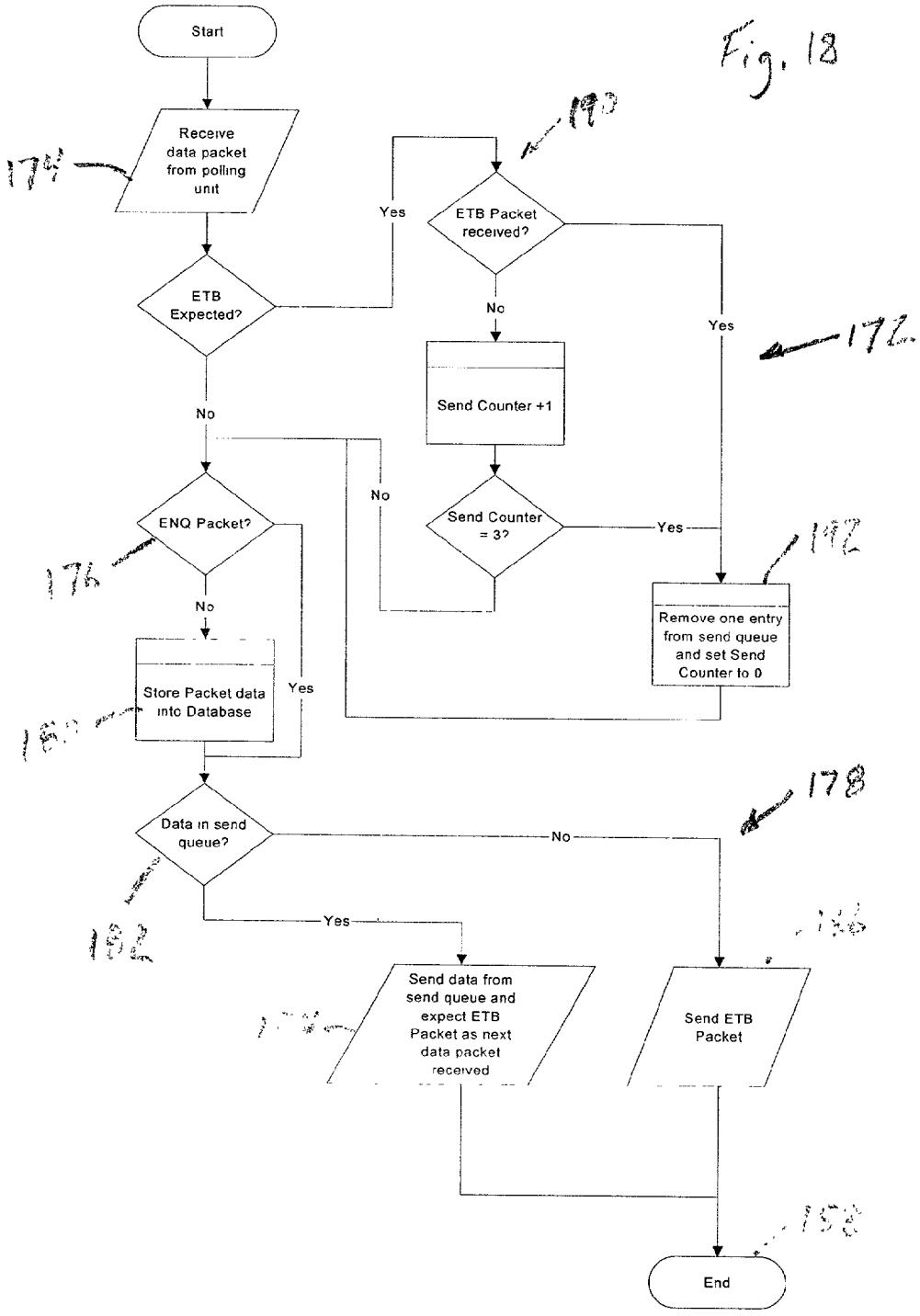

Fig. 18

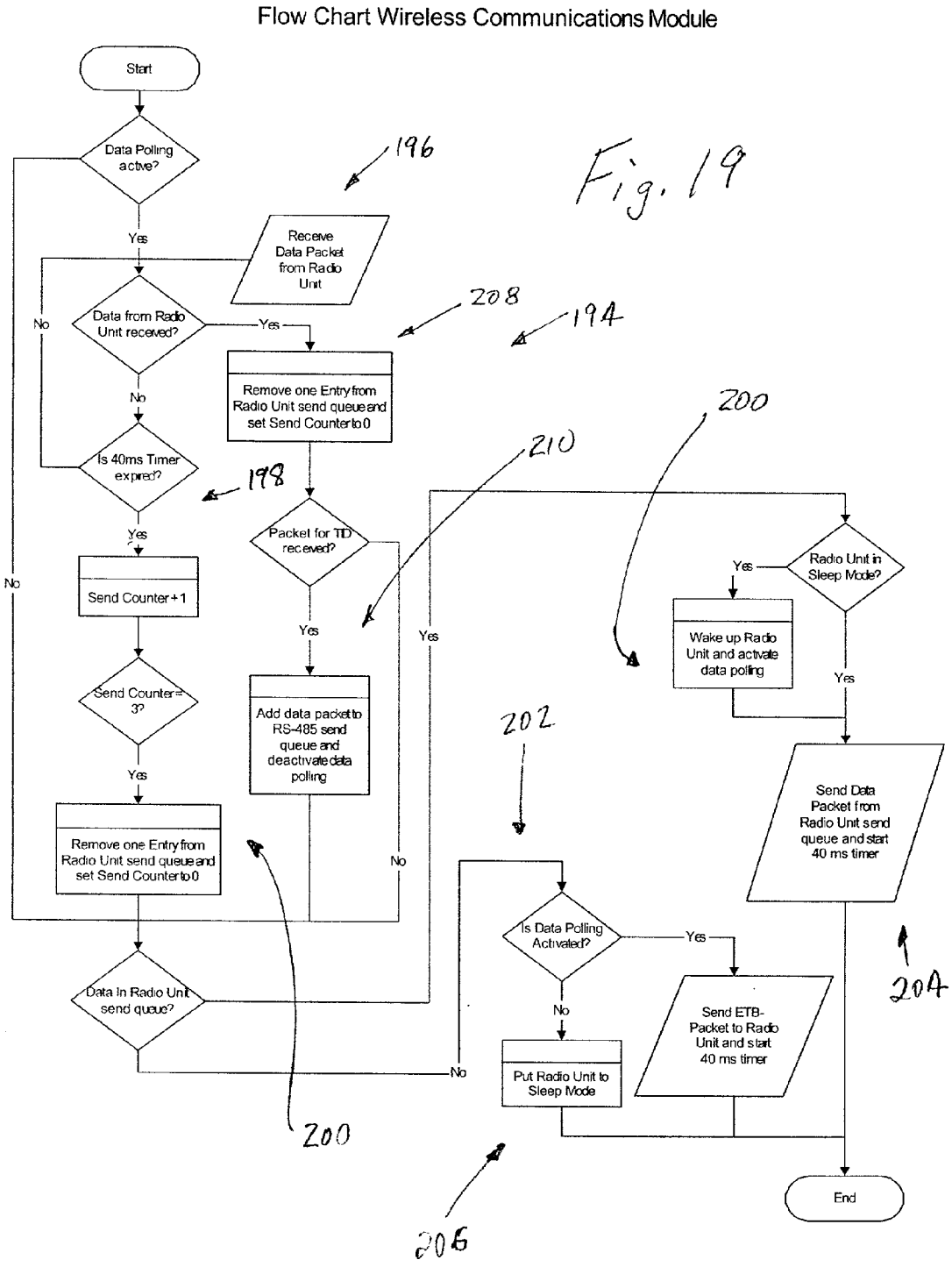
Flow Chart Wireless Communications Module
Start
Data Polling active?
Yes
No
Receive Data Packet from Radio Unit
196
Data from Radio Unit received?
Yes
No
208
194
Remove one Entry from Radio Unit send queue and set Send Counter to 0
Is 40ms Timer expired?
198
Yes
No
Send Counter+1
Send Counter=3?
Yes
Remove one Entry from Radio Unit send queue and set Send Counter to 0
Packet for TID received?
Yes
No
Add data packet to RS-485 send queue and deactivate data polling
210
Data in Radio Unit send queue?
No
200
Radio Unit in Sleep Mode?
Yes
Wake up Radio Unit and activate data polling
Yes
Send Data Packet from Radio Unit send queue and start 40 ms timer
204
202
Is Data Polling Activated?
Yes
No
Send ETB-Packet to Radio Unit and start 40 ms timer
Put Radio Unit to Sleep Mode
206
End
Fig. 19

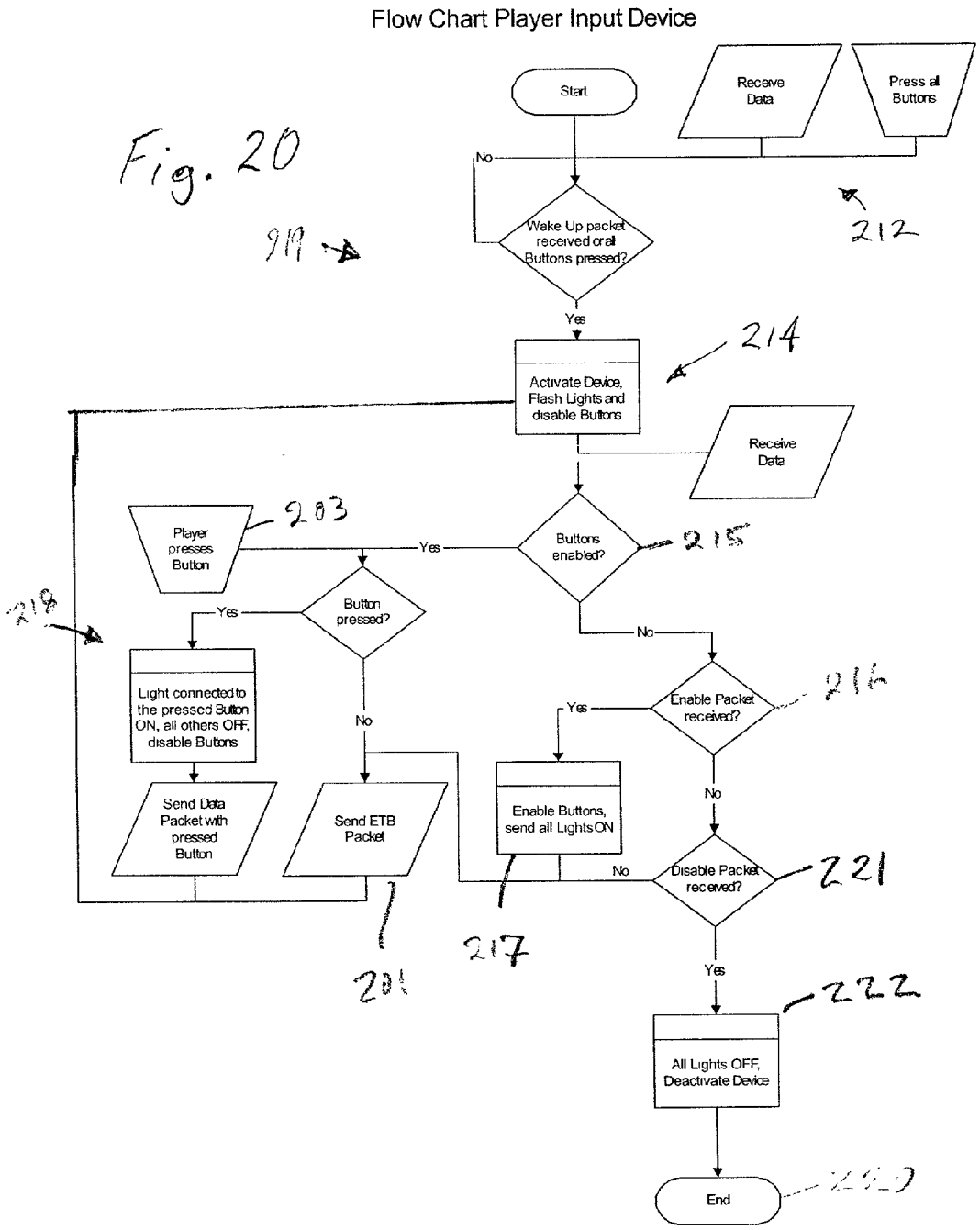
Flow Chart Player Input Device
Fig. 20
Start
Receive Data
Press all Buttons
No
Wake Up packet received or all Buttons pressed?
Yes
Activate Device, Flash Lights and disable Buttons
Receive Data
Player presses Button
Yes
Buttons enabled?
Yes
Button pressed?
No
Light connected to the pressed Button ON, all others OFF, disable Buttons
Send Data Packet with pressed Button
Send ETB Packet
Enable Packet received?
Yes
No
Enable Buttons, send all Lights ON
No
Disable Packet received?
Yes
All Lights OFF, Deactivate Device
End
212
214
215
216
217
218
219
221
222
223
203

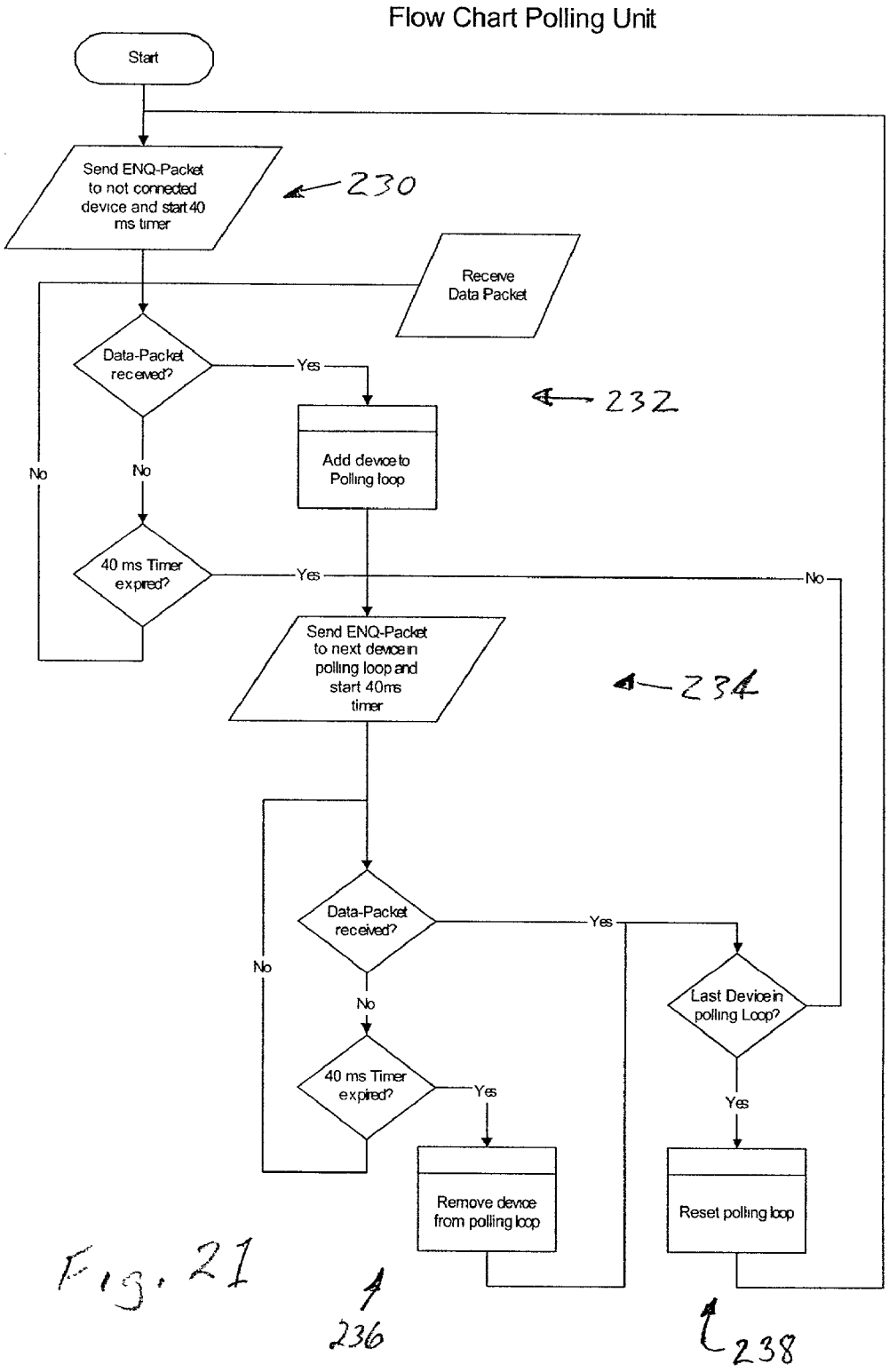
Flow Chart Polling Unit
Start
Send ENQ-Packet to not connected device and start 40 ms timer
230
Receive Data Packet
Data-Packet received?
Yes
No
Add device to Polling loop
232
40 ms Timer expired?
Yes
No
Send ENQ-Packet to next device in polling loop and start 40ms timer
234
Data-Packet received?
Yes
No
Last Device in polling Loop?
40 ms Timer expired?
Yes
Yes
Remove device from polling loop
Reset polling loop
236
238

Fig. 21

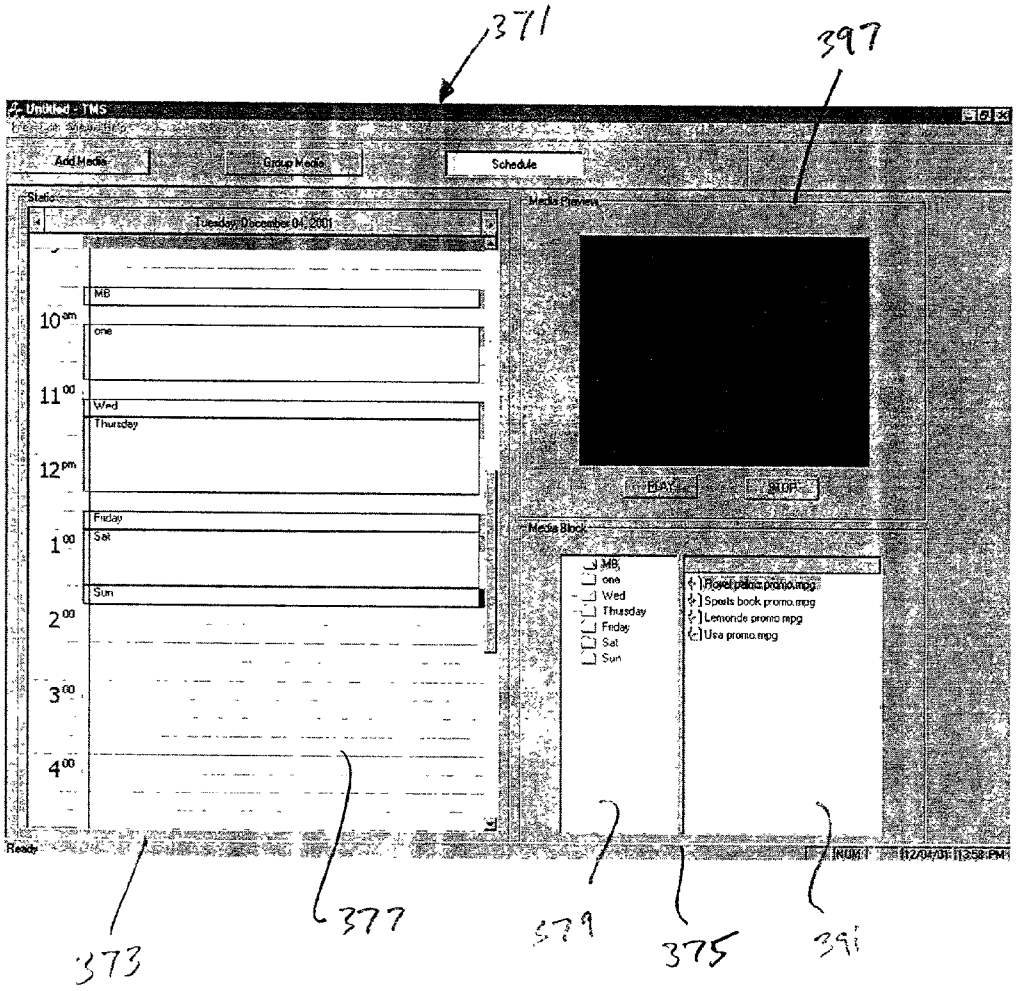
371
397
Untitled - TMS
Add Media
Group Media
Schedule
Static
Tuesday, December 04, 2001
MB
one
Wed
Thursday
Friday
Sat
Sun
10am
11 00
12pm
1 00
2 00
3 00
4 00
Media Preview
PLAY
STOP
Media Block
MB
one
Wed
Thursday
Friday
Sat
Sun
Sports book promo.mpg
Lemonde promo.mpg
Usa promo.mpg
Ready
NUM
373
377
379
375
391

Fig. 22

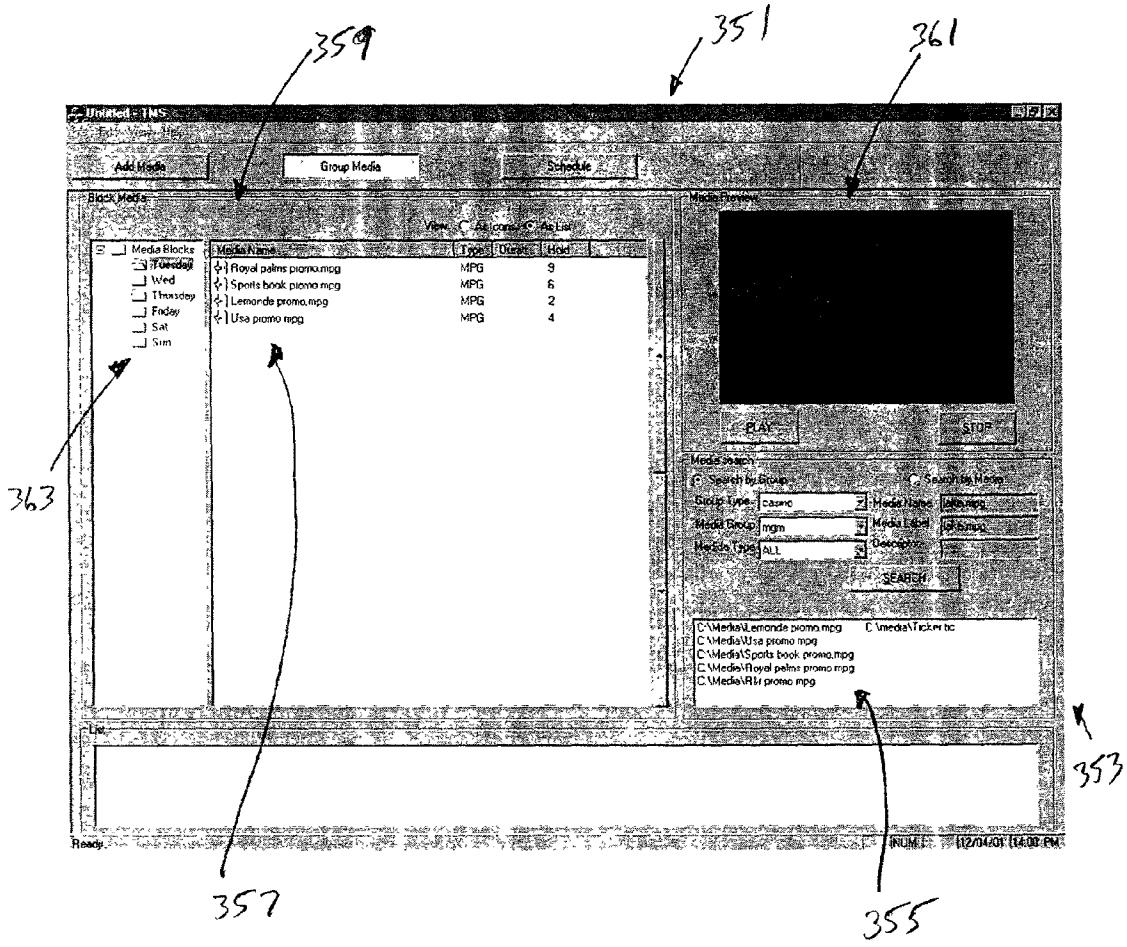
359
351
361
Untitled - TMS
Add Media
Group Media
Schedule
Block Media
Media Blocks
Tuesday
Wed
Thursday
Friday
Sat
Sun
Media Name
Type
Duration
Hold
Royal palms promo.mpg
MPG
9
Sports book promo.mpg
MPG
6
Lemonde promo.mpg
MPG
2
Usa promo.mpg
MPG
4
Media Preview
PLAY
STOP
Media Search
Search by Group
Search by Name
Group Type
casino
Media Name
Media Group
mgm
Media Label
Media Type
ALL
Description
SEARCH
C:\Media\Lemonde promo.mpg
C:\media\Ticker.tic
C:\Media\Usa promo.mpg
C:\Media\Sports book promo.mpg
C:\Media\Royal palms promo.mpg
C:\Media\RH promo.mpg
List
Ready
NUM
12/04/01 14:00 PM
363
353
357
355

Fig. 23

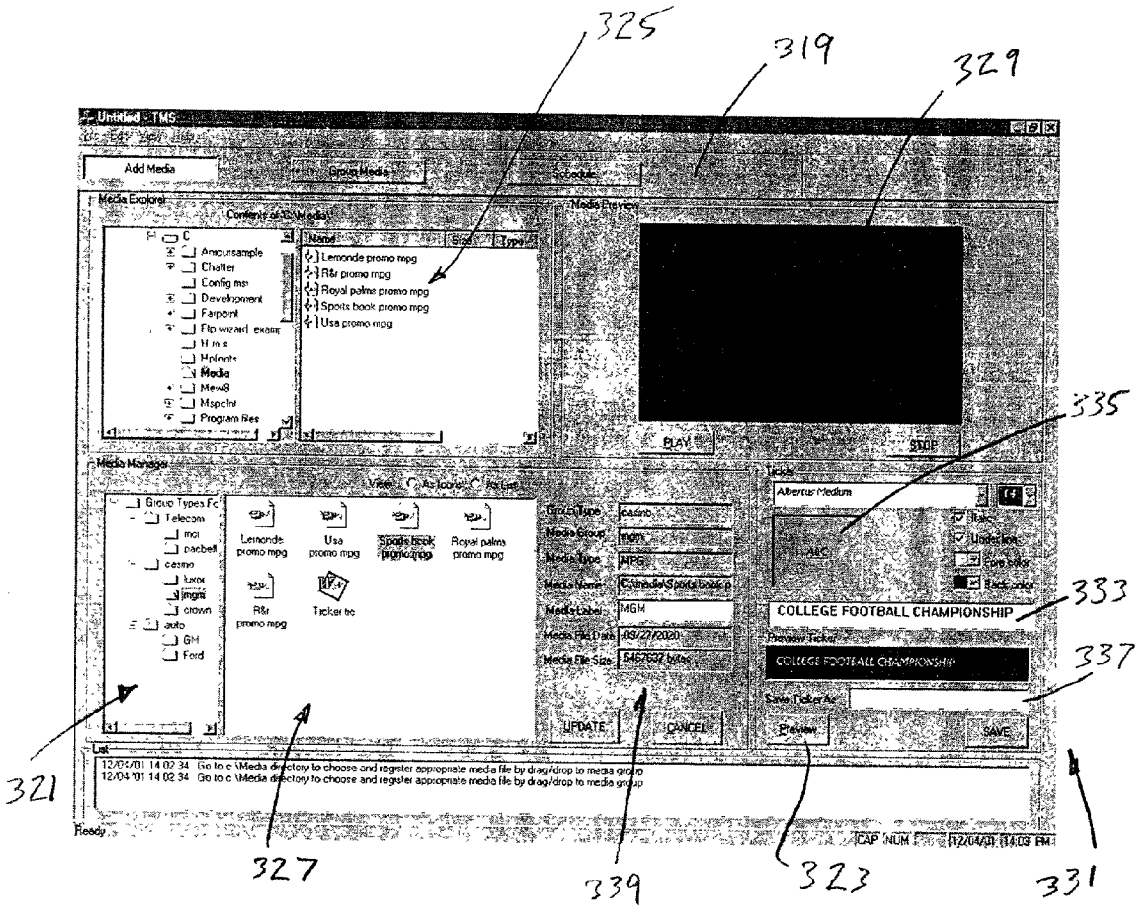
325
319
329
335
333
337
321
327
339
323
331
Untitled - TMS
Add Media
Group Media
Media Explorer
Media Preview
Media Manager
Lemonde promo mpg
R&r promo mpg
Royal palms promo mpg
Sports book promo mpg
Usa promo mpg
PLAY
STOP
COLLEGE FOOTBALL CHAMPIONSHIP
UPDATE
CANCEL
Preview
SAVE
Ready

Fig. 24

Fig. 25A

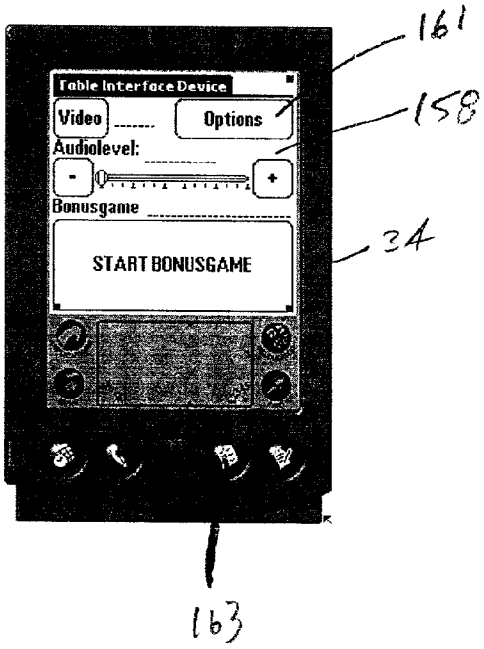

Fig. 25B

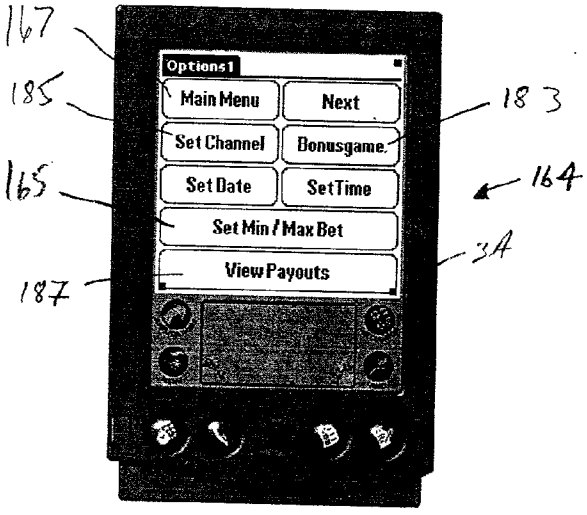

Fig. 25C

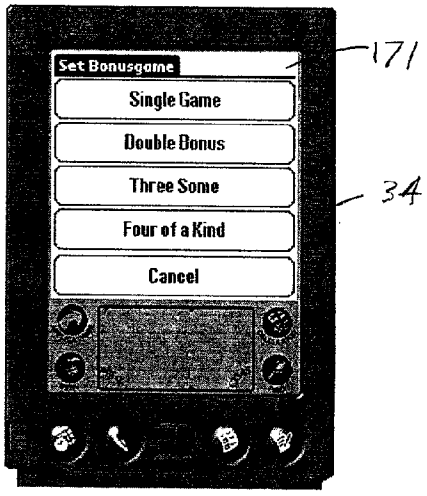

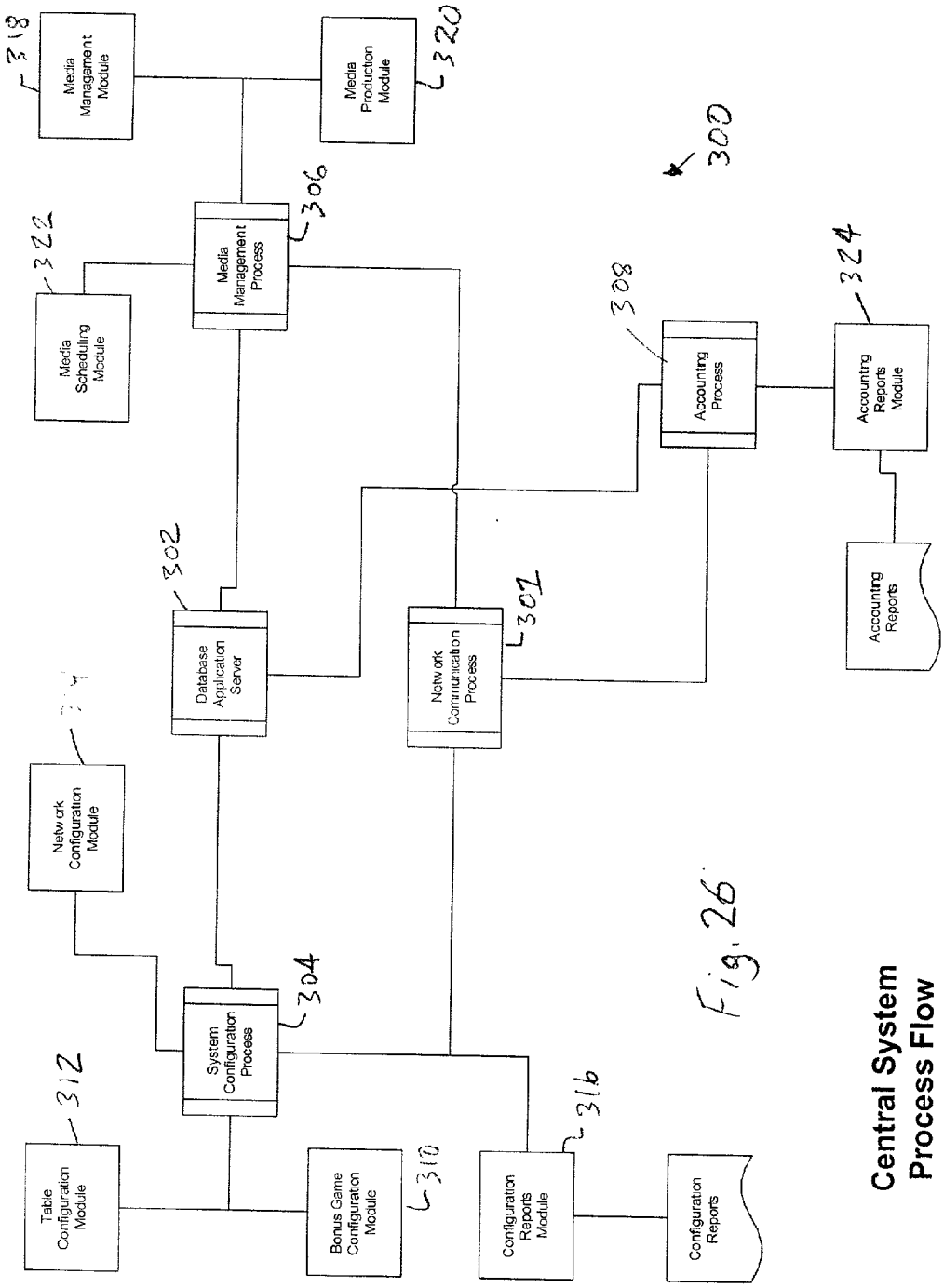

Fig. 26

Central System Process Flow

VIDEO TABLE GAME APPARATUS, SYSTEM, AND METHOD OF USE

FIELD OF THE INVENTION

[0001] This invention relates to table games of chance such as those provided in gaming establishments or environments. More particularly, this invention relates to a system for providing video and audio entertainment, advertising, or other information, or additional gaming services or gaming opportunities for table games.

BACKGROUND

[0002] "Table games" are games that users play at a table rather than at, for example, a slot machine. Examples of table games include card games like blackjack, poker, baccarat, and Pai Gow, as well as craps and roulette.

[0003] Casinos have long sought for ways for make table games more exciting or interesting for game players and customers. One prior art attempt to achieve this object has been the addition of conventional side wagering options for players at the table game. In this manner, a game player is provided the opportunity not only to place the conventional primary wagers of the types typically required to play the underlying table game but also, at differing times, to place additional "side wagers," or bets, on the occurrence of events during the table game.

[0004] For example, in a blackjack table game, the player typically places a conventional primary wager at the commencement of the game in order to have the opportunity to win the wager, and bonus or award, based on the contents of the player's hand (i.e., the cards dealt to the player during the game) against the contents of the dealer's hand (i.e., the cards dealt to the dealer during the game). The conventional, prior art side wager in this type of table game typically provides the player the opportunity to place an additional wager on a dedicated and marked location on the table for the player to bet on the occurrence of an particular events, such as a particular combination of cards being dealt to the player during the game. In the event that the particular card combination is then dealt to the player, the player wins an award or bonus in addition to that possible in the underlying conventional game of blackjack.

[0005] Gaming establishments and providers have tried to provide increased player excitement and interest by adding other features in the game table environment. Examples include improved lighting, music, and overall gaming ambience and atmosphere. Other examples include automation of the underlying table game itself such as by providing an automated video screen interface mounted on the table and dealing and displaying, e.g., the blackjack cards via the screen rather than physically dealing physical cards to the players. In these types of limited video screen table games, each card player, except the house dealer, has a video screen mounted in the table so that it is viewable only that one player.

[0006] While these types of prior art table games and related gaming environments can provide a level of increased excitement and interest for many game players, the applicant has discovered that more can be done to make the side wagering opportunity much more interesting and exciting. For example, the applicant has discovered that the conventional side wagering opportunity is fairly static and redundant—it usually provides much the same type of side wagering opportunity for the primary game over time and that side wagering opportunity is itself fairly conventional since it is typically based on the occurrence of events in the underlying table game. The applicant has discovered that the conventional, relatively static side wagering opportunity presents a limitation and problem. In this regard, the conventional side wagering opportunity does not maximize the opportunity for the side wagering game to increase interest and excitement if it is not static or if it were to provide yet additional gaming opportunities or entertainment options for the table game players.

[0007] The applicant also has discovered that more can be done to not only render the table game more varied and exciting, but also that doing so through video system can provide the gaming establishment with other opportunities to increase player interest, loyalty, or excitement and increase revenue opportunities for the gaming establishment.

BRIEF SUMMARY OF THE INVENTION

[0008] The present invention provides a system for providing video information, entertainment, or additional gaming service or services for at least one underlying table game. The system provides a at least one video screen connected to a computing unit, and the video screen is mounted in association with a table game table, visible to a plurality of the players of the underlying table game at the game table. The Computing unit and screen cooperatively provide to the players of the table game video information in addition or supplemental to that of the underlying table game.

[0009] In one embodiment, the system provides a plurality of video screens mounted in association with a plurality of table game tables. Preferably, each of the video screens is connected to a central computing unit or server, and the central computing unit runs a table game video management system.

[0010] Most preferably, the video management system and computing unit (or central computing unit or server as the case may be) cooperatively provide, or are adaptable to provide, varying video information, entertainment, or additional gaming opportunity or service for the game players at the gaming table (or plurality of gaming tables as the case may be).

[0011] In a particularly preferred embodiment, the system includes at least one side wagering or bonus game input device mounted in association with at least one game table. The input device is preferably connected to the computing unit (or central computing unit or server as the case may be).

[0012] Most preferably, the input device, video screen, and computing unit cooperatively provide an interactive supplemental game service, such as, for example, a bonus or side wager game for the game players of the underlying table game at the table game table associated with the video screen. Most preferably, they also cooperatively provide, or can readily be adapted to provide, a variety of additional types of entertainment or informational video or image content, such as for example, sports, music, news, financial, attract, or advertising content.

[0013] Most preferably, the input device, video screen, and computing unit provide a gaming establishment or other business with new methods of gaming, attracting, entertaining, and retaining customer game players, and generating revenues and profits.

[0014] In a preferred embodiment, the system provides both video and text or image banner content on the video display at a table game.

[0015] There are additional novel aspects and advantages of the preferred embodiment of the present invention. They will become apparent as the specification proceeds, including by way of the Detailed Description below and the Claims.

[0016] Examples of such additional aspects disclosed below include the various types of side wagering games and methods of use and doing business with the disclosed apparatus and systems in, for example, a casino or other gaming establishment. type of table game typically provides the player the opportunity to place an additional wager on a dedicated and marked location on the table for the player to bet on the occurrence of an particular events, such as a particular combination of cards being dealt to the player during the game. In the event that the particular card combination is then dealt to the player, the player wins an award or bonus in addition to that possible in the underlying conventional game of blackjack.

[0017] Gaming establishments and providers have tried to provide increased player excitement and interest by adding other features in the game table environment. Examples include improved lighting, music, and overall gaming ambience and atmosphere. Other examples include automation of the underlying table game itself such as by providing an automated video screen interface mounted on the table and dealing and displaying, e.g., the blackjack cards via the screen rather than physically dealing physical cards to the players. In these types of limited video screen table games each card player, except the house dealer, has a video screen mounted in the table so that it is viewable only that one player.

[0018] While these types of prior art table games and related gaming environments can provide a level of increased excitement and interest for many game players, the applicant has discovered that more can be done to make the side wagering opportunity much more interesting and exciting. For example, the applicant has discovered that the conventional side wagering opportunity is fairly static and redundant—it usually provides much the same type of side wagering opportunity for the primary game over time and that side wagering opportunity is itself fairly conventional since it is typically based on the occurrence of events in the underlying table game. The applicant has discovered that the conventional, relatively static side wagering opportunity presents a limitation and problem. In this regard, the conventional side wagering opportunity does not maximize the opportunity for the side wagering game to increase interest and excitement if it is not static or if it were to provide yet additional gaming opportunities or entertainment options for the table game players.

[0019] The applicant also has discovered that more can be done to not only render the table game more varied and exciting, but also that doing so through video system can provide the gaming establishment with other opportunities to increase player interest, loyalty, or excitement and increase revenue opportunities for the gaming establishment.

BRIEF SUMMARY OF THE INVENTION

[0020] The present invention provides a system for providing video information, entertainment, or additional gaming service or services for at least one underlying table game. The system provides a at least one video screen connected to a computing unit, and the video screen is mounted in association with a table game table, visible to a plurality of the players of the underlying table game at the game table. The computing unit and screen cooperatively provide to the players of the table game video information in addition or supplemental to that of the underlying table game.

[0021] In one embodiment, the system provides a plurality of video screens mounted in association with a plurality of table game tables. Preferably, each of the video screens is connected to a central computing unit or server, and the central computing unit runs a table game video management system.

[0022] Most preferably, the video management system and computing unit (or central computing unit or server as the case may be) cooperatively provide, or are adaptable to provide, varying video information, entertainment, or additional gaming opportunity or service for the game players at the gaming table (or plurality of gaming tables as the case may be).

[0023] In a particularly preferred embodiment, the system includes at least one side wagering or bonus game input device mounted in association with at least one game table. The input device is preferably connected to the computing unit (or central computing unit or server as the case may be).

[0024] Most preferably, the input device, video screen, and computing unit cooperatively provide an interactive supplemental game service, such as, for example, a bonus or side wager game for the game players of the underlying table game at the table game table associated with the video screen. Most preferably, they also cooperatively provide, or can readily be adapted to provide, a variety of additional types of entertainment or informational video or image content, such as for example, sports, music, news, financial, attract, or advertising content.

[0025] Most preferably, the input device, video screen, and computing unit provide a gaming establishment or other business with new methods of gaming, attracting, entertaining, and retaining customer game players, and generating revenues and profits.

[0026] In a preferred embodiment, the system provides both video and text or image banner content on the video display at a table game.

[0027] There are additional novel aspects and advantages of the preferred embodiment of the present invention. They will become apparent as the specification proceeds, including by way of the Detailed Description below and the Claims.

[0028] Examples of such additional aspects disclosed below include the various types of side wagering games and

methods of use and doing business with the disclosed apparatus and systems in, for example, a casino or other gaming establishment.

BRIEF DESCRIPTION OF THE DRAWINGS

[0029] The applicants' preferred embodiments are shown in the accompanying drawings wherein:

[0030] **FIG. 1** is schematic view of a stand-alone embodiment of the present video table game system;

[0031] **FIG. 2** is combination pictorial and schematic view of the stand-alone video table game system of **FIG. 1**;

[0032] **FIG. 3** is a top elevational view of the gaming table in the present video table game system;

[0033] **FIG. 4** is a schematic data flow diagram of a multi-table networked embodiment of the present video table game system;

[0034] **FIG. 5** is a schematic network diagram of the networked video table game system of **FIG. 4**;

[0035] **FIG. 6** is a schematic view of the gaming table in the present video table game system, showing a variety of character options from which a player may select one character to participate in a bonus video game;

[0036] **FIG. 7** is a schematic view of an alternative input keypad embodiment for a player interface or input device at a game table;

[0037] **FIG. 8** is a flow chart showing one method in which a game player may interactively use the present video game system in order to procure a side wager bonus from a game dealer in connection with an underlying or primary card game of chance;

[0038] The PPC**216** is a video content controller running embedded Windows NT 4.0 loaded on an internal flash RAM. The PPC**216** also can contain local digital video storage on which a bonus or side wager video game can be stored if desired for, e.g., regulatory reasons. The PPC**216** receives digital video information from the TMS **12** and from, as noted above, the tuner **24**. The PPC**216** contains a high quality MPEG video card and digital audio card (not shown), all of which are standard off-the-shelf items. The PPC**2** thus provides digital video and audio content to the TDD **26** (which also provides audio output) from the tuner **24**, the TMS **12**, or locally stored video or audio on the PPC**216**.

[0039] The polling unit **28** runs a controller program (written in C) and polls the connected PPC**216**, TID **34**, and MID **36**. Depending on the instructions provided by these connected devices **16**, **34**, and **36**, the polling unit manages and arbitrates the communication between the PPC**216**, the TID **34**, the MID **36**, and the PID **40**.

[0040] The TID **34** is a standard hand-held palm computer programmed with the Palm Operating System. The preferred TID **34** is the Visor Deluxe from Handspring Co. but many different types of microcontrollers could be substituted and perform the functions of the preferred Visor Deluxe TID **34**. The TID **34** allows the table game dealer to change video input or video channel content provided as output by the PPC**216** and thereby displayed on the TDD **26**, adjust volume of the sound output from the speakers associated with the TDD **26**, start a bonus or side wager game from the PPC**216** for viewing on the TDD **26**, and turn the system **10** on and off.

[0041] The MID **36** (Model Pal 141 by Paltronics, supra) receives player input information from the PID **40** and forwards that information to the polling device or unit **28**. Although the MID **36** and PID **40** are interconnected by a conventional **485** line **38** in the depicted embodiment, the system may readily employ other communication lines well known in the art, including either optical or radio frequency links and communication formats and protocols.

[0042] The various system devices **16**, **24**, **26**, **28**, **34**, **36**, and **40**, except the TMS **12**, can each communicate with each other by a unique packet-based protocol. Each packet of information includes five data types: 1. an "FF," with identifies the start of a packet; 2. an "ID," which identifies the device (**16**, **24**, **26**, **28**, **34**, **36**, or **40**) to which the packet is directed; 3. "Type," which identifies the type of content in the packet (such as a command or data); 4. "Length Short," which identifies the number of bytes of information in the packet as being the same or less than the standard packet maximum, and if the amount actually received for the packet is less or more than this number, then receiving device ignores the packet; and 5. "Length Long," which identifies the number of bytes of information in the packet as being longer than the standard packet maximum, allowing the device to look for and read more than the standard packet maximum.

[0043] The TMS **12** communicates only with the PPC**216**, and vice versa (except in the case of the utilization of, and TMS **12** communication with, the alternative embodiment of **FIGS. 11 and 12** as described below). This communication is through a conventional "folder" transfer format utilizing the Ethernet protocol, which is well known to those skilled in the art. Each folder is a list of digital files transmitted from the TMS **12** to the PPC**216**. As the TMS **12** transfers a folder to the PPC**216**, the TMS **12** also transfers the digital files identified in the folder. These files can include video clips, video or banner advertisements, image bitmaps, and ticker data or banners. Each such file is transferred with an associated start and end time or play interval (for replaying at the expiration of the play interval).

[0044] Each folder on the TMS **12** is established by operation of the TMS **12** in a fashion well known to those skilled in the art. The operator of the TMS **12** works through Windows interfaces to establish and schedule the various files and their arrangement in the folders to be transferred to the PPC**216**. The operator can use standard drag-and-drop and file generation, inspection, and arrangement commands and techniques. The operator also can preview or play media files locally on the TMS **12**.

[0045] The PPC**216** receives the folders, files, and scheduling information and places them in a scheduling array. The PPC**216** then plays and distributes the files according to the information in the scheduling array except as commanded to do otherwise by instructions received from the polling unit **28**. Such commands can include commands from the MID **36** or TID **34**, such as a command from MID **36** to play and display on the TDD **26** a bonus or side wager game (stored on the PPC**216** and played through the MPEG card on the PPC**216**), or to have a bonus or side wager game displayed

on TDD **26** respond to a command input by the game player through the PID **40** and ultimately received and processed at the PPC**216**.

[**0046**] In order to display video or image information at the TDD **26**, the system **10** utilizes the conventional video and image key-color-overlay system (RGB –05040). According to this industry-standard system, each item of MPEG video information to be displayed is allocated to particular key color, and other items of video information, are allocated to non-key colors. The system thus displays the MPEG video information according to the key color allocation scheme for the screen and displays non-MPEG information according to the non-key color allocation scheme for the screen.

[**0047**] In order to add a non-MPEG ticker to the bottom of a screen displaying MPEG video on the screen, the ticker is allocated to a non-key color for display on the portion of the screen reserved at the time of screen design for that particular non-key color. As a result, the MPEG video is displayed on the portion of the screen reserved for the MPEG video's particular key color, and the ticker is displayed on the differing portion of the screen reserved for the ticker's particular non-key color.

[**0048**] In the preferred embodiment of the present system **10**, the screen layout (key and non-key color allocation described above) is designed by the system operator at the TMS **12**. The TMS **12** thus generates a conventional screen script in a fashion well known to those skilled in the art, and the TMS **12** sends this information to the PPC**216** for implementation on the TDD **26**.

[**0049**] As shown in **FIG. 3**, each game table **50** may provide: (i) a number, e.g., **52**, **54**, of player stations or locations, at each of which a single game player may sit or stand in order to play a table game at the game table **50**; and (ii) a central game player or dealer station or location **56**. The TDD **26** preferably is arranged to be readily viewable by all game players at the player locations, e.g., **52**, **54**, and by the player or dealer at the dealer location **56** at the game table **50**. In addition, the dealer station **56** provides the dealer with the ability to easily reach the MID **36** and the TID **34**; and the dealer can move the PID **40** from place to place around the game table **50** as desired or required to allow a given game player the opportunity to readily reach and press input buttons (not shown) on the PID **40**. Thus, in the example of **FIG. 3**, the player at player station **54** can reach and press input buttons on PID **40** when the PID **40** is located directly adjacent the player's player station **54**.

[**0050**] In this table game **50**, the players at the table game are offered the opportunity to play a supplemental side-wager game, such as, for example, a game entitled "Follow the Queen" described below, in the event that certain bonus game awarding activities take place in the underlying base blackjack game to be played at the game table **50**. The rules for this example "Follow the Queen" side wager game are set forth in a brochure or sign made available to the game players such as shown in **FIG. 10**. It is understood, of course, that this particular side wager game (as set forth in **FIG. 10** and accompanying text), and the nature of the base game to be played at the game table **50**, are illustrative of the many types of base table games and supplemental bonus or side wager games that may be implemented by the present system **10** of FIGS. **1-3**.

[**0051**] Turning now to **FIG. 11**, an alternative table game system, generally **59**, to the table gaming system of **FIG. 2** includes a table game table **50** with six player locations **60-65** and one dealer location **66** opposite the player locations **60-65** on the table **50**. The table game table **50** also includes a video screen or TDD **26** spaced above the table **50** in order to be readily and preferably simultaneously viewable by game player (not shown) at the player locations **60-65** and the dealer location **66**. The table game table **50** also has a PID **40** movably mounted on the upper surface of the table **50** in order to move among game players at the player locations **60-65**.

[**0052**] The **FIG. 11** system **59** also includes an alternative table display controller **68** providing the functionality, in one box, of the PPC**216**, the MID **36**, polling unit **28**. and tuner **24** of the **FIG. 2** system **10**. This table display controller **68** is connected to: the table interface device ("TID") **34** by an RS485 line **70**; the PID **40** by a wireless or wired interface **72**; and the TMS **12** by either a wired or wireless Ethernet, RS485, telephonic, or cellular connection **74**.

[**0053**] With reference now to **FIG. 12**, the table display controller **68** of **FIG. 11** may, in one embodiment, include a computer housing (not shown) with a single board computer **76** mounted on a PCI BUS board (not shown) in a fashion well known to those skilled in the art. Also mounted on the PCI BUS board are a Mutech video capture card **78**, a video tuner card **80**, a Netstream MPEG I Card **82**, a network manager card **84** (such as a Paltronics network manager card), and a wireless interface card **86**.

[**0054**] The network manager card **84** is connected to, and thereby in communication with, a PDA plug-in card **88** with an RS485 module on the card **88**. This RS485 PDA plug-in card **88** is mounted in the PDA TID **34** in a fashion well known to those skilled in the art. Although not shown in **FIG. 12**, the network manager card **84** is also connected to, and thereby in communication with, the TMS **12** as shown in **FIG. 11**.

[**0055**] The wireless interface card **86** is connected by an RS485 connection **90** to the wireless interface card **86** in the table display controller **68**. This wireless interface card **86** is also connected by a wireless radio frequency connection **72** to a wireless interface card **92** also mounted within the PDA TID **34** in a fashion well known to those skilled in the art. In turn, the wireless interface card **92** is connected by a second wireless radio frequency connection **94** to the PID **40**.

[**0056**] With reference now to **FIG. 13**, an alternative embodiment of the table display controller **68** of **FIG. 11** may include a Paltronics Display Controller **96** available from Paltronics identified above. The Paltronics Display Controller **96** is mounted in a according to the key color allocation scheme for the screen and displays non-MPEG information according to the non-key color allocation scheme for the screen.

[**0057**] In order to add a non-MPEG ticker to the bottom of a screen displaying MPEG video on the screen, the ticker is allocated to a non-key color for display on the portion of the screen reserved at the time of screen design for that particular non-key color. As a result, the MPEG video is displayed on the portion of the screen reserved for the MPEG video's particular key color, and the ticker is dis-

played on the differing portion of the screen reserved for the ticker's particular non-key color.

[0058] In the preferred embodiment of the present system **10**, the screen layout (key and non-key color allocation described above) is designed by the system operator at the TMS **12**. The TMS **12** thus generates a conventional screen script in a fashion well known to those skilled in the art, and the TMS **12** sends this information to the PPC**216** for implementation on the TDD **26**.

[0059] As shown in **FIG. 3**, each game table **50** may provide: (i) a number, e.g., **52**, **54**, of player stations or locations, at each of which a single game player may sit or stand in order to play a table game at the game table **50**; and (ii) a central game player or dealer station or location **56**. The TDD **26** preferably is arranged to be readily viewable by all game players at the player locations, e.g., **52**, **54**, and by the player or dealer at the dealer location **56** at the game table **50**. In addition, the dealer station **56** provides the dealer with the ability to easily reach the MID **36** and the TID **34**; and the dealer can move the PID **40** from place to place around the game table **50** as desired or required to allow a given game player the opportunity to readily reach and press input buttons (not shown) on the PID **40**. Thus, in the example of **FIG. 3**, the player at player station **54** can reach and press input buttons on PID **40** when the PID **40** is located directly adjacent the player's player station **54**.

[0060] In this table game **50**, the players at the table game are offered the opportunity to play a supplemental side-wager game, such as, for example, a game entitled "Follow the Queen" described below, in the event that certain bonus game awarding activities take place in the underlying base blackjack game to be played at the game table **50**. The rules for this example "Follow the Queen" side wager game are set forth in a brochure or sign made available to the game players such as shown in **FIG. 10**. It is understood, of course, that this particular side wager game (as set forth in **FIG. 10** and accompanying text), and the nature of the base game to be played at the game table **50**, are illustrative of the many types of base table games and supplemental bonus or side wager games that may be implemented by the present system **10** of FIGS. **1-3**.

[0061] Turning now to **FIG. 11**, an alternative table game system, generally **59**, to the table gaming system of **FIG. 2** includes a table game table **50** with six player locations **60-65** and one dealer location **66** opposite the player locations **60-65** on the table **50**. The table game table **50** also includes a video screen or TDD **26** spaced above the table **50** in order to be readily and preferably simultaneously viewable by game player (not shown) at the player locations **60-65** and the dealer location **66**. The table game table **50** also has a PID **40** movably mounted on the upper surface of the table **50** in order to move among game players at the player locations **60-65**.

[0062] The **FIG. 11** system **59** also includes an alternative table display controller **68** providing the functionality, in one box, of the PPC**216**, the MID **36**, polling unit **28**. and tuner **24** of the **FIG. 2** system **10**. This table display controller **68** is connected to: the table interface device ("TID") **34** by an RS485 line **70**; the PID **40** by a wireless or wired interface **72**; and the TMS **12** by either a wired or wireless Ethernet, RS485, telephonic, or cellular connection **74**.

[0063] With reference now to **FIG. 12**, the table display controller **68** of **FIG. 11** may, in one embodiment, include a computer housing (not shown) with a single board computer **76** mounted on a PCI BUS board (not shown) in a fashion well known to those skilled in the art. Also mounted on the PCI BUS board are a Mutech video capture card **78**, a video tuner card **80**, a Netstream MPEG I Card **82**, a network manager card **84** (such as a Paltronics network manager card), and a wireless interface card **86**.

[0064] The network manager card **84** is connected to, and thereby in communication with, a PDA plug-in card **88** with an RS485 module on the card **88**. This RS485 PDA plug-in card **88** is mounted in the PDA TID **34** in a fashion well known to those skilled in the art. Although not shown in **FIG. 12**, the network manager card **84** is also connected to, and thereby in communication with, the TMS **12** as shown in **FIG. 11**.

[0065] The wireless interface card **86** is connected by an RS485 connection **90** to the wireless interface card **86** in the table display controller **68**. This wireless interface card **86** is also connected by a wireless radio frequency connection **72** to a wireless interface card **92** also mounted within the PDA TID **34** in a fashion well known to those skilled in the art. In turn, the wireless interface card **92** is connected by a second wireless radio frequency connection **94** to the PID **40**.

[0066] With reference now to **FIG. 13**, an alternative embodiment of the table display controller **68** of **FIG. 11** may include a Paltronics Display Controller **96** available from Paltronics identified above. The Paltronics Display Controller **96** is mounted in a housing on a Paltronics Pentium III or IV compatible personal computer motherboard **98** which is adapted to include the functionality of the above-referenced (**FIG. 12**) video capture card, video tuner card, and MPEG I card and associated inputs and outputs (not shown in **FIG. 13**). This **FIG. 13** embodiment also includes the other elements of the TDD **68** and associated structures described above with reference to the **FIG. 12** embodiment.

[0067] Referring now to **FIGS. 14 and 15**, the PPC**216** of **FIG. 1** includes a conventional personal computer style housing (not shown in **FIG. 14**) and a conventional BCM **815** motherboard **100** with a Pentium III CPU (not shown), DVDROM drive, Paltronics flash card board with conventional flash memory, and hard drive mounted within the housing. A Mutech IV-410 video capture card **102**, a Sigma Designs Netstream 2000 video card **104**, and Paltronics RS232-to-RS485 filter card **106** are mounted in PCI slots (not shown) in the BCM motherboard **100**. The filter card **106** is also connected by an RS232 connection **120** to the COM **2** port **122** on the BCM motherboard **100**. In turn, the filter card **106** is connected as shown in **FIGS. 1 and 2** to the polling unit **28**.

[0068] The filter card 106 performs a conversion of RS485 communication into RS**232** communication for input on the PPC**2**'s comport, and vice versa. This is the same function performed externally by RS485-to-RS232 conversion boxes available commercially from sources such as B&B Electronics. The filter card **106** does the same thing internally and provides more RS485 communication ports than provided by commonly available external boxes.

[0069] Still referring to **FIGS. 14 and 15**, the PPC**216** is connected by its COM **1** port **108** on the BCM motherboard

100 through an RS232 connection **116** to an RS232 data port (not shown) on a Contemporary Research 232-STA TV tuner box **10**. This TV tuner **110** is connected to a conventional RF TV signal source **112**, such as a satellite or cable video source, and provides a single composite TV signal through an output port (not shown) by a cable connection **114** to a composite video signal input in the Mutech card **102**. The TV tuner **110** provides an audio output (not shown) connected by a conventional audio cable **118** to the audio line in jack **120** in a conventional high quality audio card **121** mounted on the BCM motherboard **100**.

[**0070**] The Mutech card **102** is connected by its VGA output port to the VGA input port on the Netstream card **104**. The VGA output port of the Netstream card is connected by a conventional digital video cable **124** to the table display device **26**. The Netstream card **104** is also connected to the auxiliary line in jack **128** in the audio card **121**, which allows MPEG videos to have their audio routed through the audio card **121** and provides control over such audio by the PPC **216** system software.

[**0071**] The PPC**216** also provides analog audio, through the audio line out jack **130** of the audio card, to external speakers **128** associated with the LCD **26** (a conventional high quality personal computer monitor such as an LCD or plasma display) in order to provide audio to the gaming table (not shown in **FIG. 14**). Finally, the PPC**216** is connected, **100** through conventional Ethernet compatible cabling **14**, to the TMS **12** by an Ethernet port **132** in a conventional Ethernet card **134** mounted in the BCM motherboard.

[**0072**] As shown in **FIG. 15**, the polling unit **28** is also connected to the TID **34** and the machine interface card or device **36**. Also, the Mutech video capture card **102** may also receive input from other video devices or sources, such as a VCR, DVD, etc. **136**, in a fashion well known to those skilled in the art.

[**0073**] With reference now to **FIG. 16**, the table input or interface device ("TID") **34** of **FIG. 1** initializes, generally **154**, at startup of the TID **34** by copying a startup or initialization program into RAM **138**. Then, the startup program starts the welcome application and initializes serial functions **140** for the TID **34**. Next, the startup program starts the TID main application **142**. From there, the startup program checks the versionnumber parameter in the TMS database to determine if it is same as the actual versionnumber number **144** loaded on the TID **34**. If they are the same value, the startup program loads parameters from the database into TID RAM **146**. If they are not the same, the startup program **154**: (i) initializes a random number generator program **148** in order to seed it with the time of two separate user taps (or button presses) in response to screen queries on the TID **34** screen; and (ii) stores the default parameter values (versionnumber, two random number generator (RNG) seed numbers, last selected video channel, last selected TV audio level, last selected MPEG audio level, last chosen minimum bet, last chosen maximum bet, selected table identification, PID identification, TDS parameters, and serial interface data (baud rate, parity, stop bit, number of data bits)) in the TID's database and then loads them into RAM **146**. In either event, the startup program **154** then sends the initial parameters from RAM to the PID **40** and the PPC**216** (or TDS **152** in the **FIG. 11** embodiment shown below). This TID initialization routine **154** then ends **156**.

[**0074**] With reference now to **FIGS. 17 and 25**A, the TID main application **158** starts by displaying a main menu **170**. The main application first responds, generally **160**, when the user (e.g., table game dealer at the associated game table) taps a button, e.g., **161**, **163**, either on the screen or on the TID **34** itself. The main application runs a password entry routine, generally **162** and when the password is entered correctly, the main application provides, as shown in **FIG. 25**B, another screen **165** allowing the user to select the main menu **167**, select a bonus game **183**, set the video channel **185**, display and change set-up parameters, generally **164**, and view bonus payouts of the bonus game at the associated game table **187**.

[**0075**] When the user (e.g., table game dealer) selects the main menu **167**, a series of screens provides the user with options of selecting and playing or running, as applicable, video programs, television channel content, audio content, various bonus games (as shown in **FIG. 25C**), setting pertinent parameters (options) **166**, viewing game status. and ending bonus games prematurely if desired (including termination of addition of any data to the pay out table on the TID **34**. Upon user selection from among these alternatives, the main application forwards an authorization to play the selected content to the sendqueue or proceeds back through the password entry routine and associated screens to allow the user to change set-up parameters **168**. When selected content plays on the TDD **26** or associated speakers according to the user's selection of the type of content desired, the main TID application **158** displays its main menu again **170**, awaiting user input once again and responding accordingly as described above and shown in **FIG. 17**.

[**0076**] Turning now to **FIG. 1** and **18**, the polling unit (PU) **28** periodically calls or sends query to the TID **34**, the MID **36**, and the TDS **26**, which only respond if they are called by the polling unit **28**. In this type of Master-Slave communication, the master (the PU **28**) controls the whole communication process. The slaves (the TID **34**, MID **36**, and TDS **26**) respond when the PU **28** asks them to do so. A packet in this communication consists an address for a device (i.e., the PU **28**, TID **34**, TDS **26**, and MID **36**) and some control information (Type (ENQ, ETB, etc.) and length and checksum data (which ensures the correctness of the packet)). All these devices are connected to the same hardware line (e.g., RS-485 line **32**). The PU **28** queries each device (e.g., the TID **34**) in sequence, via an ENQ-Packet, if it has data for another device (e g., TDS **26**). If the queried device has no such data, the queried device (e.g., TID **34**) answers with a ready message (an ETB-Packet). If the queried device has such data (i.e. the TID **34** has data for the TDS **26**), the queried device sends such data to the desired device (i.e., TID **34** sends a data packet to the TDS **26**). The receiving device (TDS **26** in the example) then answers with a ready message (ETB-Packet). This ready message signals the sending device that the sent data has been received correctly. (e.g., TID **34** receives ETB-Packet from the TDS **26**, then the TID **34** knows that the data packets sent from the TID **34** to the TDS **26** were received correctly.) This ready message (ETB-Packet) also signals the PU **28** that the communication is over and that the PU **28** can take control and query another next device.

[**0077**] The TID's serial communication routine, generally **172** thus starts by receiving a data packet over the line connecting the TID **34** to the PU **174**. If an ETB packet is

not expected, this routine **172** next determines if the received packet is an ENQ packet **176**. If so, the TID **34** serial communication routine **172** continues checking the send queue **182**, bypassing the data storing step **180**. If not, the routine **172** stores the packet data into a database **180** on the TID; and if data (such as the video channel, the TV audio level, the MPEG audio level, the Start Game command, the End Game command, other parameters (such as Min-Bet or Max-Bet) is in the send queue (a FIFO buffer) **182**, the routine **172** sends the data in the send queue out on the serial communication line and prepares to expect an ETB packet as the next data packet received from the polling unit **184**. If, on the other hand, data is not in the send queue, the routine **172** sends the packet as an ETB packet **186** out on the communication line. The TID serial communication routine **172** then ends **188**.

[**0078**] If, upon receiving a data packet from the polling unit, an ETB packet is expected, the serial communication routine determines if the data packet is in fact an ETB packet **190**. If it is, one entry is removed from the send queue and the send counter is set to zero **192**. From there, the routine proceeds to the ENQ packet determination step **176** recited above. If, instead, the data packet is not an ETB packet, the send counter is incremented by one, and the send counter is then analyzed to determine if it equals 3. If it does, the routine **172** proceeds to the entry removal and counter reset step **192**; and if it does not, the routine **172** proceeds to repeat the ENQ packet determination step **176** and succeeding steps as describe above.

[**0079**] This same serial communication routine, described above by reference to the TID, is also employed to manage serial communication in the other serial devices in the present embodiment. The same routine **172** thus also runs within the PU **28**, the PPC**216**, the TDD **26**, and the MID **36** of **FIGS. 1 and 2**, with one exception for the comparable serial communication routine for the MID **36**. In the MID routine (not shown), when the ENQ packet determination step (**176** in **FIG. 18**) determines that a packet is an ENQ packet, the next step is to proceed directly to sending the ETB packet (**186** in **FIG. 18**) rather than to proceed to determining if data is in the send queue (**182** in **FIG. 18**).

[**0080**] With reference now to **FIG. 1** and **19**, wireless communications between the MID **36** and PID **40**, as an alternative to RS485 communications described above, can he handled in both devices **36**, **40** by a wireless communications module or routine **194**. When the wireless data reception is started, the module monitors receipt of a data packet from the wireless radio frequency transceiver in the device **196**. If a data packet is not received by this monitoring step and a timer expires, the send counter is incremented **198**. If the resulting value of the send counter is three, an instruction is set to remove one entry from associated radio unit's send queue and send it, and the send counter is reset to zero **200**. If data is in the radio units send queue, the radio unit is first awoken (if it is in sleep mode) and a data packet is sent by the radio unit from its send queue **202**. If data is not in the send queue and data polling is activated, and ETB packet is sent to the radio unit and the timer is started **204**. Otherwise, the radio unit is put into the sleep mode **206**.

[**0081**] During the monitoring step **196**, when a data packet is received from the radio unit in the device, one data entry is removed from the radio unit's send queue and the send counter is set to zero **208**. If the data entry is addressed to the TID **34** of **FIG. 1**, the data packet is added to an RS485 send queue and data polling is deactivated **210** to save power at the battery driven PID **40** of **FIG. 1**. From there, the routine cycles back to the beginning and determine whether data polling is active **196**.

[**0082**] In short, the wireless communication routine **194** of **FIG. 19** manages radio communication to the PID **40**. If no bonus game is running, the PID **40** is put into sleep mode. If a bonus game starts, the MID (which is the master with respect to the PID) **36** polls the PID (Slave) **40** until the buttons are pressed and activated on the PID **40**. Then, the PID **40** is put to sleep again to save battery power.

[**0083**] With reference now to **FIGS. 1 and 20**, the PID **40** operates upon start up **219** by monitoring for receipt of data through its wireless or wired interface and for the press of a button by a game player at the game table **212**. When a wake-up data packet is received or a button on the PID **40** device is pressed, the PID **40** is activated, lights flash on the PID **40**, and the input buttons are disabled **214**. If the buttons on the PID **40** are disabled **215**, the routine **20** proceeds to determine if an enable packet was received **216**. If an enable packet has been received, the PID **40** buttons are enabled and lights are activated **217**. If a button is then pressed **203**, the light for that button remains on, the others turn off, and the PID **40** sends a packet identifying the pressed button **218**. The start-up routine **219** cycles back to the button disabling step above **214**.

[**0084**] If, on the other hand, an enable packet was not received **216** at the testing step above and a disable packet was received **221**, the PID **40** is disabled **222**. The start-up routine ends **220**. If the enable packet was not received and a disable packet has not been received **221**, then the start-up routine **219** proceeds to the send ETB packet step **201** and then cycles back to the disable buttons step **214**.

[**0085**] With reference next to **FIGS. 1 and 21**, the PU **28** operates upon start by sending and ENQ (enquiry) packet to any device not presently connected to the PU **28** and start a 40 millisecond timer **230**. Upon receipt of a data packet at the PU **28** prior to the expiration of the timer, the device that sent the data packet is read from the packet and that device is added to the polling loop **232**. After expiration of the timer, an ENQ packet is sent to the next device in the polling loop, and again the timer is started **234**. If no responsive data packet arrives prior to the expiration of the timer, that particular device is removed from the polling loop **236**. If a responsive data packet is received prior to expiration of the timer and the particular device is the last device in the polling loop, the polling loop is started again **238** as at startup **230**. Otherwise, the polling loop reinitiates the portion of the loop in which an ENQ packet is sent to the next device in the polling loop and the timer is started again **234**.

[**0086**] In sum, the PU **28** is a passive device and does not send data except ENQ packets. The PU **28** thus enables the other devices, such as the TID **34**, TDS **26**, and the MID **36**, to communicate with each other by sending ENQ packets. If one such device receives an ENQ packet, the device can send a data packet to a separate addressed device, which then answers with an ETB packet if the separate addressed device received the data packet correctly. When the ETB

packet is received, the PU **28** is informed that the communication is completed and the PU **28** has control over communications again. The PU **28** also resumes control if the **40** ms timer expires.

[**0087**] Now referring back to **FIGS. 1 and 2**, the preferred PPC**216** runs a script engine which controls the appearance of all objects and media on the associated TDD **26**. Script engines are well known to those skilled in the art. The script engine executes each command in the script in seriatim unless directed to do otherwise by the script commands. The script engine is called in the PPC**216** by an associated scheduling module in the PPC**216**.

[**0088**] Commands in the script: (i) control graphics and video, including when, where, and how they appear on the screen of the associated TDD **26**; (ii) send instructions in response to polling from the polling unit **28** that a particular script has been executed; (iii) instruct one script to run another or to repeat a script; and (iv) instruct a script to await completion of tasks called by the script engine, such as running of an MPEG video or other media. In the event that the script being run is not a bonus script, the script engine sets a flag to ignore all other commands in the script upon execution of a command to play live video. On the next call to handle the script, the engine will hide all objects except the ticker and live video modules. While this flag remains set, the script engine processes only ticker and control commands—all other graphics objects are ignored. In the event that the script being run is a bonus script, however, the script engine continues to execute all the commands in the script.

[**0089**] The script engine thus can call and execute a variety of other modules including an MPEG video playing module, a live video playing module, a TV tuner module, a bitmap graphics module, a ticker tape graphics module, a serial port module, a network communications module, and a scheduler module.

[**0090**] The MPEG video playing module utilizes the capabilities of the Sigma Designs Netstream 2000 card in the PPC**216**. This card provides hardware MPEG decoding, scaling of MPEG video, and an analog chroma key overlay, as described above.

[**0091**] The Netstream 2000 card is controlled using the Windows Direct Media function calls. A direct show filter opens an identified MPEG file, loads it, and then buffers and streams the MPEG data to the Netstream 2000 card. The Direct Show filter thus starts MPEG files as instructed to do so and streams the data to the Netstream 2000 card so that the scheduling of MPEG data to the Netstream 2000 card is transparent to the Netstream 2000 card. The filter issues a notification to the PPC**216** scripting system when a given MPEG video is nearly finished.

[**0092**] When the MPEG video playing module is not running, the main scripting application mutes the audio output to the Aux and Line-out outputs on the motherboard. Conversely, this muting is turned off when this module is executing and running an MPEG video.

[**0093**] The live video playing module utilizes the capabilities of the Mutech IV-**410** card. This card can capture composite video for display on an associated TDD using an analog chroma key as noted above. This card also provides a VGA adapter and is controlled by a Mutech SDK.

[**0094**] The Mutech card does not have audio output input. Audio from a video source for this card is run into the line-in channel on the motherboard in a fashion well known to those skilled in the art, and the Mutech card turns off audio muting for its video source when it is providing video to the system.

[**0095**] The TV tuner module controls the 232-STA TV tuner, which connects to the PPC**216** through a serial RS 232 null modem cable. The tuning module controls and responds to the buttons on the front panel of the 232-STA TV tuner and audio output settings for it. This module also controls channel changes for video sources to the 232-STA TV tuner.

[**0096**] Alternatively, the PPC**216** may employ a Hauppauge WinTV card and live video module. This alternative WinTV card is controlled by the Hauppauge OCX control and SDK.

[**0097**] The bitmap graphics module opens bitmap files and displays them on the associated TDD **26**. This module creates a child window and identification number for each bitmap graphics object. This identification number is then utilized by the script engine in calling the associated bitmap for display by the bitmap graphics module.

[**0098**] The bitmap graphics module can scale an image, draw boarders around the image, label the image, and allow it to be overlaid on an MPEG video or live video stream being displayed on the associated TDD. This is accomplished by the chroma key color scheme described above.

[**0099**] The ticker tape graphics module displays and scrolls text banners (on the associated TDD **26**) created with Windows fonts and images. The text for a given text banner is provided by an ASCII stream stored in an internal buffer. The ASCII stream can be passed to this module either as a text file or as a stream from an external source.

[**0100**] The banner text stream may also include special tags. These tags can contain instructions to change the font parameters for displaying the associated text characters, such as font size, color, font typeface, bolding, italics, and underlining. If a particular font that is specified for given text is not a resident Windows font, this module provides a default font.

[**0101**] Another special tag can insert an image into the banner display. The image tag specifies the location of the image file and its size. The image file is a bitmap file.

[**0102**] In order to minimize drawing time required by this module, a memory device-context (DC) is used. The memory DC is not as wide as the screen area but is twice as high. A sliding window method is implemented to draw from the memory DC to the TDD **26** screen in a fashion well known to those skilled in the art in order to stream the banner text across the TDD **26** screen.

[**0103**] The script engine on the PPC**216** calls this ticker graphics module along with commands in the script for the appearance characteristics for the ticker to be displayed by the module. These characteristics include screen position, boarder size, background color, border color, etc.

[**0104**] As noted above, the serial port module on the PPC**216** monitors the RS 485 port for packets addressed to the PPC**216** and sends messages out the RS 485 port on the PPC**216**. When this module receives a polling packet, it checks its send message queue for the next packet to be sent.

If there is message to send in the queue, this module creates and sends packets encapsulating the message. If is no such message, this module responds with an ETB packet.

[**0105**] If this module receives a valid packet for the PPC**2** other than a polling packet, this module passes the packet to the main software module of the application. The main software module then determines which module should process the packet. If the packet requires a response, the main software module generates the response and forward the response to this serial port module for transmission of the packet.

[**0106**] Thus, if a TV channel command is received, the main software module calls the 232-STA TV tuner module to change the channel as instructed by the command. If a set audio level command is received, the main software module will set the audio level for the channel specified in the packet.

[**0107**] The main software module will call the script engine with a change script command is received from the TID. The script engine then will to locate the script in the command list, such as the attract mode script, the bonus script, and the outcome script.

[**0108**] On occasion, the PPC**216** will receive packets from an associated TID for the associated TMS **12**. The serial port module forwards these types of packets to the network communications module for forwarding of these packets to the TMS **12**.

[**0109**] The network communication module establishes and manages and Ethernet TCP/IP connection of the PPC**216** to the associated TMS **12** and connect This module also connects to a UDP Multicast socket on the TMS **12** and accomplished file transfer according to the TCP/IP and UDP Multicast protocols in a fashion well known to those skilled in the art.

[**0110**] When an operator requests scheduling of a media block on the TMS, this module, which also runs on the TMS **12**, sends a message to the PPC**216** to determine if the involved media files are present on the PPC**216**. If the files are present, this module sends the schedule file for the files to the PPC**216**. If they are not, this module transfers the needed media files and then transfers the schedule for them to the PPC**216**. This scheduling information includes the start time, the start date, the end time, the end date, media block file names, and play code to indicate if the media files should be replayed daily, weekly, monthly, etc.

[**0111**] The scheduler module maintains a list of scheduled media blocks for the PPC**216**. This list consists of text file stored on the hard drive for the PPC**216**. This module checks the block list every minute and determines if a different attract block should be played. Is so and the block's "Attract" script is on the PPC**2**'s hard disk, this module calls the script engine and passes the path for the block script file to the script engine. If there is no block scheduled for the current time, this module calls a default attract script and executes that script.

[**0112**] The PPC**216** hard disk has a root directory containing folders for the scripts and associate ini.files, applications programs, the text banners, MPEG videos, and image bitmaps. The root directory also contains bonus script text, a default script and ini file, a scheduler text file, and the bonus MPEG video file.

[**0113**] II. Multi-table, Network Table Game Video System

[**0114**] With reference now to **FIG. 5**, one embodiment of the multi-table networked game video system consists of a number of table display systems **250-260**—preferably one such table display system, e.g., **250**, for every game table (not shown) in the network. Each such system, e.g., **250**, supports an associated **15** inch LCD table display device, e.g., **252**, a high quality sound system mounted at the associated game table, and an associated table interface device, e.g., **254**, in communication with such system **250** through either wired or wireless lines. Each such system, e.g., **250**, is connected to a preferably high speed Ethernet LAN or WAN (local or wide area network) **256**. The preferred table display system, e.g., **250**, is preferably a Pentium III or IV personal computer with conventional but high quality Ethernet support, MPEG and digital video and audio processing capabilities, serial communication ports, and digital data storage and RAM.

[**0115**] The LAN or WAN **256** includes and supports a video and audio server or hub **258**, which supports VCRs **260**, DVD players **262**, satellite or cable feeds **264**, VCR players **266**, or other sources of video or audio. The server **258** combines these video inputs and distributes them via standard coax cable to each TDS's (e.g., **250**) TV tuner card, and the TDS then distributes selected video channels or content to the associated TDD **252**.

[**0116**] The LAN or WAN **256** also supports a table management system **268**, a table prize server **270**, and a Crown Data server **272**. The table management system **268** manages the overall network **256** and its various components in coordination with the connected table display systems, e.g., **250**. The table management system **268** is also preferably a powerful Pentium III or IV LAN server with conventional but high quality Ethernet support, MPEG and digital video and audio processing capabilities, serial communication ports, and digital data storage and RAM.

[**0117**] With reference now to **FIG. 4**, the table display system **250** in the networked embodiment provides, in one box such as shown in the alternative embodiments of the table display controller **68** of **FIGS. 11 and 12**, much, but not all, of the functionality of, as shown in **FIG. 1**, the PPC**216**, the polling unit **28**, and the machine interface device **36**. The table display system **250** is in RS **232** communication **276** with the associated table interface device **254**, and the table interface device **254** is in communication with an associated player interactive device **274**. Through the RS 232 communication line **276**, the table display system **250** exchanges with the table interface device **254**: (i) table display device configuration data (including date and time, game table money or betting denominations, minimum and maximum bet amount, audio level, video channel, and game table identification); (ii) bonus/promotion player win data (table identification, win amount, and date and time of the win); (iii) error data; and (iv) bonus/promotion game play data (including game or promotional program and associate pay table). In turn, through wired or wireless communication, the table interface device **254** exchanges button press (game player selection) data with the player interface or interaction device **274**.

[**0118**] The table display system **250** supports the associated LCD **252** in order to allow the LCD **252** to receive from the table management system **268** (and through the table

management system **268**, the LAN or WAN **256** of **FIG. 5**): (i) multimedia data; (ii) media scheduling data; (ii) bonus/promotion game data; (iii) error data; and (iv) table display device (LCD **252**) configuration data. The LCD configuration data includes the identification data for the associated gaming table and the IP address of the LCD **252** on the LAN or WAN **256** of **FIG. 5**. The media scheduling data includes media type, play date, play time, and display window for displaying selected media on the LCD screen **252**.

[**0119**] The table display system **250** also supports the LCD **252** to allow the LCD **252** to receive and display accumulated bonus/promotion game data from the table prize server **270** via the LAN or WAN ("network") shown in **FIG. 4**. The table display system **250** also exchanges bonus/promotion win data with the table prize server **270** over the network **256**.

[**0120**] In turn, through the network the table prize server **270** exchanges: (i) bonus/promotion win data with the Crown Data server **272**; and (ii) bonus/promotion win data with the table management system **268**. This win data includes data regarding player win amounts and promotional giveaway dates and times.

[**0121**] Now referring to both **FIGS. 4 and 5**, the table management system ("TMS") **268** utilizes a standard relational database (such as SQL Server), Microsoft NT 4.0, and an Ultra Suite GUI Development Tool Set. It includes additional TMS applications system software, preferably written in C++ JAVA, providing bonus game, promotional and advertising, and video and audio, and accounting functionality.

[**0122**] As shown in **FIG. 26**, the TMS applications system, generally **300** thus provides network communications process **301**, the database application server (SQL Server) **302**, system configuration process **304**, media management process **306**, and accounting process **308**. The system configuration process **304** includes a bonus game configuration module **310**, a table device configuration module **312**, a network configuration module **314**, and a configuration reports module **316**. The media management process **306** includes a media management module **318**, a media production module **320**, and a media scheduling module **322**. The accounting process **308** includes an accounting reports module **324**. This same basic TMS applications system configuration may also be implemented on the stand-alone system with the TDC **68** of **FIGS. 11 and 12** shown above.

[**0123**] The network communications process or module **301** provides the communication link between the processes that take place on, as shown in **FIGS. 4 and 5**, the TMS **268** and the other devices, e.g., the TDS **250** and the TPS **270**, on the network **256**. Referring now to **FIGS. 4, 5**, and **26**, the network communications module **301** interfaces directly with all these other devices and provides a single transparent communications transport and interface for all the communications on the network **256**.

[**0124**] The bonus game configuration module **310** manages the storage of data, in the database application server **302**, relating to bonus games associated with the system. This includes bonus game software, pay tables for bonus games, and video and graphics that are associated with a given bonus game. In some jurisdictions, pay table and corresponding media may then be identified and downloaded to an appropriate TDS **250** when the operator or dealer wants to change the bonus games. In other jurisdictions, however, this type of information and media may be maintained on the game table's TDS **250**. Preferably, the bonus game configuration module **310** is readily adaptable to the requirements of the jurisdiction.

[**0125**] The bonus game configuration module **310** also provides the following functions: (i) querying of the table display system **250** for current bonus game information including an identification of the loaded bonus game and its associated pay table(s); (ii) defining which bonus games are available and active for each game table (not shown in FIGS. **45**, or **26**); (iii) defining the available and active pay tables for the game(s); (iv) turning video or audio on or off at given game tables; and (v) assigning channels for real time display on LCD's, e.g., **252**, on the network.

[**0126**] The table device configuration module manages the registration of each of the network devices into the central database application server **302**. In addition to the network devices shown in **FIGS. 4 and 5**, other such network devices can include network printers, gaming establishment signage, etc. Registration information for a network device also includes device location, IP address, hardware type, and software versions. Whenever network device configuration data changes, the table device configuration module sends the new data out over the network to the corresponding network devices for update.

[**0127**] The network configuration module **314** manages the relationships between the network devices, the connections between network devices, and the data paths for data from one network device to another.

[**0128**] The network configuration report module **316** allows a network system operator to create reports about the network and data stored in the database application server **302**. This module **316** also allows the operator to generate graphic views of the network and the relationships between network devices.

[**0129**] The media management module **318** provides, as shown in **FIG. 24, a** user interface **319** for registration of media and multimedia into the database application server **302**. This module **318** supports medial in a wide variety of formats, including MPEG, JPEG, WAV, AVI, and others, and a wide variety of data storage and I/O devices, such as floppy drives, hard drives, CDROM, and DVD. The operator defines media groups or types, generally **321**, in the database application server **302**. One example would establish a group type "Auto" with subgroups for "GM" and "Ford."

[**0130**] The media management module **318** allows an operator to preview media through a simultaneously preview sub-window **329**. The module **318** provides a media manager sub-window **341** and media explorer sub-window **343** which cooperatively allow the operator to drag and drop a media icon, e.g., **325**, for a given media file into a desired group type, e.g., **327**, in the media manager sub-window **341**, thereby placing that media file **325** in that group **327**.

[**0131**] The media management module **318** also provides a ticker sub-window interface, generally **331**, for the creation of ticker type messaging, such as that seen on cable news networks. Through this interface **331**, the operator may input text **333** and image tickers **335** in a variety of colors and fonts and store the ticker messages and associated data

337 in the database application server **302**. This interface **331** also allows users to preview tickers in a ticker preview window **323**.

[**0132**] The media management module also provides a selected media file information sub-window **339**. This sub-window **339** displays the media file information and allows the user to update the information and data structure reflected by the media manager sub-window **341**.

[**0133**] The media production module **320** provides, as shown in **FIG. 23, a** window interface **351** for generating media blocks (groupings), play lists for each block, and play schedules for the listed media from the central database application server **302**. This interface allows the operator to search and sort media in the central database through a search sub-window **353**, and then drag and drop resulting media **355** into a play list **357** for an associated media block (schedule grouping, e.g., day of the week) **363** on a block media sub-window **359**. The play list can then be rearranged and media elements in the list can be previewed in the preview sub-window **361**. Play lists can then be stored in the central database on the associated TMS.

[**0134**] The media scheduling module **322** provides, as shown in **FIG. 22**, another window **371** that allows the operator to select, as shown in **FIG. 5, a** particular compatible device, such as TDD **252**, and schedule a play list for play on that device. The media scheduling module **322** has a scheduling sub-window **373** with a calendar **377** and a media block sub-window **375** with the available media blocks **379** and play list **391** for a selected media block. Through the calendar **377**, the operator selects the year, month, day, and time, and drags and drops a block or individual media file into the desired time slot on the calendar **377**. The operator may also preview selected media files in a preview sub-window **397** in the scheduling window **371**. When the operator has completed the schedule, the media scheduling module **322** transmits the schedule to applicable devices on the network.

[**0135**] Referring now to **FIG. 26**, the accounting process provides a window interface for an operator to generate system and network reports from data stored in the central database. The operator can select data to be reported and a wide range or search of sort criteria in order to gather system and network data and then view or print the resulting, report.

[**0136**] With reference now to **FIGS. 4 and 4**, each table display system, e.g., **250**, runs Microsoft Windows NT and C++software modules providing the startup, TMS interface, TID interface, background task handling, and TDD display functionality. The startup functionality includes: (i) queries to the TMS **268** to determine if the table display system **250** is known to the network **256**; (ii) if not known to the network **256**, asking the TID **254** for a node identification and forwarding that identification to the TMS **268**, which marries the node identification to an IP address and forwards that address to the TDS **250**; (iii) loading of animations from the TDS **250** CDROM drive onto the TMS **250** hard disk drive, hashing the animations, and verifying their authenticity; and (iv) downloading the current bonus game software from the table prize server (TPS) **270** and verifying the authenticity of the downloaded game software.

[**0137**] The TMS interface software performs the following functions: (i) monitoring the network for messages from the TPS **270** and the TMS **268**; (ii) receiving table configuration information from the TMS **268** and relaying it to the TID **254** when requested; (iii) receiving video bonus game information from the TMS **268** and relaying it to the TID **254** when requested; (iv) receiving promotional video game information from the TMS **268** and relaying it to the TID **254** when requested; (v) receiving video, audio, or data entertainment, promotional, and advertising media and storing it on a specific hard disk drive partition on the TDS **250**; (vi) receiving entertainment, promotional, and advertising scheduling information and incorporating it into the current schedule; and (vii) receiving promotional data and relaying it to the TID **254**.

[**0138**] The TID **254** interface software performs the following functions: (i) using a serial protocol for communications (any of a wide variety of such serial protocols will work equally well and are well known to, or easily implemented by, those of skill in the art); (ii) monitoring the RS **232** channel in the TDS **250** for requests from the TID **254**; (iii) relaying bonus win and error data from the TID **254** to the TMS **268**; and (iv) executing a bonus event for a TID **254** and its associated game table when triggered from the TID **254**.

[**0139**] The background task handling software provides the following functions: (i) receiving game table configuration information and relaying it to the TID **254** for the game table; (ii) receiving promotional and advertising media and store it on a specific TDS hard disk **250** partition; and (iii) receiving promotional and advertising scheduling data and incorporating into the current schedule on the TDS **250**.

[**0140**] The TDD **252** display functionality software provides the following functions: (i) displaying of bonus win data across the bottom of the TDD **252** in a ticker tape fashion; (ii) activating a special bonus win event at the associated game table when a bonus threshold message is received from the table prize server (TPS) **270**; (iii) displaying or playing of bonus, promotional, or advertising multimedia on the TDD **252** (and associated sound system) according to the schedule on the TDS **250**; (iv) creating and displaying image windows in real time on the TDD **252** based on bonus, promotional, or advertising configuration data on the TDS **250**; and (v) running an attract mode video display on the TDD **252** when the associated game table is idle.

[**0141**] Each TID **254** runs software providing the startup, user interface, PID interface, TDS interface, promotional bonus game, and side wager bonus game functionality. The startup software provides the following functions: (i) verifying authenticity of the program currently loaded on the TID **254**; (ii) if the present startup is the first startup since program download, sending RNG data packet to the associated TDS **250**; and (iii) establishing communications with the TDS **250**, and if unable to do so, notifying the user with visible and audible alarms from the TID **254**.

[**0142**] The user interface software provides the following functionality: (i) touch screen interface for the TID **254**; (ii) large buttons on the TID touch screen interface; (iii) user functions for setting date and time on the TID **254**, which are then send to the TDS **250** so it can reset its clock according to the date and time data received from the TID **254**; (iv) user function to set the game table identification, which, along with the IP address for the TIDS **254**, is sent to the

TMS **268**; (v) user function to set the monetary denomination and the minimum and maximum bets, which are then sent to the TDS **250** for display on the LCD **252**; (vi) user function to view recent bonus and promotional payouts on the associated game table; (vii) user function to set the video channel on the TDS **250**; (viii) user function to set the audio volume on the TDS's associated sound system **250**; and (ix) user function to configure parameters for the TDS **250**.

[**0143**] The PID interface software provides the following functions: (i) wireless communication between the PID **274** and TID **254**, with the TID **254** being the master and the PID **274** being the slave; (ii) secure communication; (iii) detection of button press, thereby triggering bonus events; and (iv) turning lights on and off.

[**0144**] The TDS interface software provides the following functions: (i) RS 232 communications between the TID **254** and TDS **250**, in which the TID **254** is the master and the TDS **250** is the slave; (ii) providing TDS **250** configuration data, live video configuration data, and bonus/promotional game data updates in response to requests from the TID **254**; (iii) receiving and processing of bonus event display requests from the TID **254**; and (iv) relaying of bonus/promotional win amounts from the TID **254** to the TPS **270**.

[**0145**] The promotional bonus game software provides the following functions: (i) upon game player qualification for bonus event at a game table and the dealer's pressing of the "Start" button on the TID **254**, causing the TID **254** to request identification of a promotional prize on the TPS **270**; (ii) when the TID **254** then receives the promotional prize response from the TPS **270**, evaluating the response to determine if the response is a winner and identify the appropriate bonus game; (iii) sending of an activation request to the PID **274** and starting bonus request to the TDS **250** (for activation of the bonus game video on the associated TDD LCD **252**; and (iv) receiving button response (due to player pressing of a selected PID button) from the PID and forwarding the response to the TDS **250** so that the TDS **250** then causes the TDD **252** to display the promotional bonus outcome.

[**0146**] The side wager game software provides the following functions: (i) when (a) a player bets an additional side wager to play a bonus game, (b) a player qualifies to play the bonus game, and (c) the dealer presses the "Start Bonus" button on the TID **254**, sending commands to the PID **274** to activate its lights; (ii) receiving button press data from the PID **274**, and (iii) sending button press data to the TDS **250**, so that the TDS **250** then causes the side wager bonus outcome to be displayed on the associated TDD **252**.

[**0147**] The PID **274** interface software provided the following functions: (i) secure wireless communications between the PID **274** (slave) and the TID **254** (master); (ii) detecting of button press on the PID **274**; and (iii) sending button press data to TID **254** in response to next poll received from TID **254**.

[**0148**] III. Additional Aspects of Systems and Methods of Use

[**0149**] With reference now to **FIG. 8**, one method of using the present invention, whether stand-alone or networked, involves a game player at the gaming table placing a wager to participate in a primary table card game and a second or side wager to participate in a secondary or side game of chance **502**. In this case, as an example, that side wager is a bet that the player will procure a particular set of cards or card total in the hand that is dealt to the player. If the player does not receive the particular hand, the side game is over, but if the player does receive the particular hand, the player qualifies for a bonus **504**.

[**0150**] The dealer at the table then directs that player to look at the display screen (TDD) at the table to observe a group of characters that will participate in a video competition, or alternatively to choose among bonus option shields or boxes **506**. The player then selects the number for the character, or the bonus option, that the player chooses by pressing a button on a player interactive device (PID) at the table **508**. The system then runs the video competition, or exposes the bonus award chosen, in order to provide a bonus or jackpot outcome for the winning player **510**.

[**0151**] The dealer or house then pays the player the amount of the bonus outcome or otherwise provides the player with the bonus outcome, which might include non-cash bonuses, such as products or services **512**. The dealer and game players then continue with the primary card game, and the display screen may then revert to providing other video content, such as attract video, sporting or other video entertainment, advertisements, and text or images banners. Ultimately, in the method repeats in tile underlying or next primary table game **524**.

[**0152**] With reference now to **FIG. 9**, the video game system operates as follows during the example gaming method of **FIG. 8**. When the dealer activates a bonus game at the TID, the display screen (TDD) displays video animation of objects in the bonus game **514**. Next, when the player presses a keypad or button on the PID, the table display system (TDS) microcontroller or associated computing components register the choice **516**. The microcontroller then runs a video game, and/or selects a jackpot award, based upon a random number generator (RNG) and selection from a resulting pay table **518**. The microcontroller or associated components then instruct the TDD to display the video game and/or jackpot award **520**, and based on this display, the dealer or house then provide the player with the jackpot award **522**.

[**0153**] Turning now to **FIG. 10, a** more particular example of a side wager game that may take place with the present systems is called "Follow the Queen." In this game, the primary table game is blackjack. The players at the game table place their regular wagers in the underlying or primary blackjack table game **530**. Before the primary game commences, the player is then given the option to place a side wager, betting that the player will draw a queen of any suit in the first two cards dealt to the player in the primary game **532**. If the player does not draw a queen in the first two cards, the side wager game is terminated and the primary game continues to termination and repetition of the game process **542**; but if the player draws the queen in the first two cards, the player qualifies for a bonus award at the conclusion of the primary blackjack game **534**. At that time, three cards are displayed (face down) and shuffled on the video display at the game table, and the player is asked to pick a card, seeking a queen and a resulting larger bonus award or jackpot **536**. The player then presses a button on the PID at the game table, and the display reveals the selected card face. If it is a queen, the player is awarded a larger jackpot

than if, in the alternative, the card is not a queen and the player is awarded a smaller jackpot. **538**. The process then repeats in conjunction with another primary blackjack game **540**.

[**0154**] It can thus be seen that the preferred embodiments provide systems that can, at the election of the gaming establishment (system manager, dealer, etc.), provide additional and dynamically alterable and selectable entertainment, additional gaming opportunities, and/or information to game players playing table games. Many game players are therefore more likely to play longer or return to the gaming establishment for additional, more varied, and more entertaining game experience such as that provided by the preferred embodiments.

[**0155**] The preferred embodiments also can provide gaming establishment and others with additional methods and systems for delivering advertisements or promotional information. The advertisements or promotions may be those provided by the gaming establishment or by third parties (possibly for a fee or other remuneration, such as reduced cost of video content or barter service). The advertisements and promotions can thus provide the gaming establishment with additional revenue opportunities by charging third parties for providing advertising or promotional information to gaming establishment customers, employees, and other visitors with the present systems.

[**0156**] Using the preferred embodiments, the gaming establishment can increase player interest and excitement by providing a variety of other side wager or secondary games that can offered or alternated at a given game table or game table network. Other examples of such side wager or secondary games include the Wheel of Madness game, which involves a player placing a side wager on the occurrence of a particular card combination in the primary table game. Upon the occurrence of that combination, the player is given the opportunity to participate in a spinning wheel video game. When the wheel stops rotating, the player is provided the indicated bonus award. The video display associated with and viewable to game players at the game table may then display different content such as attract mode content, bonus paid banners, advertising, or entertainment or informational content.

[**0157**] Another example game is called "Scratch Off." In this example, rather than providing a spinning wheel on the video display screen, the system provides a series of cards that have sections that may be cleared or appear to be 'scratched off' in order to reveal an underlying bonus award. The game player selects one the series of cards to have that card "scratched off" on the video display screen, revealing the bonus award to the player.

[**0158**] It is to be understood that the foregoing is a detailed description of the preferred embodiments. Numerous changes may be made to the above embodiments while remaining with the scope of the present invention. The scope of the present invention is therefore to be determined by the following claims.

What is claimed is:

1. An improved table game apparatus of the type used play a primary table game of chance, the improved table game apparatus comprising in combination:

A. a gaming table having a plurality of game player locations adjacent to which a plurality of game players may play the primary table game of chance and place at least one primary game wager in connection with the primary table of game of chance;

B. a video display mounted adjacent the gaming table whereby the each among the plurality of game players may simultaneously view the video display while at the game player locations;

C. a plurality of video content sources;

D. a video input controller having multiple video inputs and a video output, each of said video inputs being in communication with at least one of said video content sources; and

E. a digital computing unit in communication with the video input controller and with the video display and providing video output information to the video display; whereby the plurality of video content sources, the video input controller, the video display, and the computing unit cooperatively provide at least a plurality of types of supplemental video content viewable by each among the plurality of game players while at the plurality of game player locations at the gaming table.

2. The improved table game apparatus of claim 1 also having a game table input device mounted in association with the gaming table and in communication with the digital computing unit whereby at least one game player may input commands to the computing unit.

3. The improve table game apparatus of claim 1 also having a supplemental game program loaded into the digital computing unit whereby the video display and digital computing unit cooperatively provide a supplemental display visible to the plurality of game players while at the game player locations at the gaming table.

4. The improved table game apparatus of claim 2 also having a supplemental game program loaded into the digital computing apparatus whereby the video display, digital computing unit, and game table input device cooperatively provide an interactive supplemental game display visible to the plurality of game players while at the game player locations at the gaming table.

5. The improved table game apparatus of claim 1 also having a plurality of game table input devices, each of said game table input devices being: (i) mounted in association with game table generally within reach of at least one of the plurality of game players when at one of the game player locations; and (ii) in communication with the digital computing unit.

6. The improved table game apparatus of claim 5 also having a supplemental game program loaded into the digital computing apparatus whereby the video display, digital computing unit, and plurality of game table input devices cooperatively provide an interactive supplemental game display visible to the plurality of game players while at the game player locations at the gaming table.

7. A table game video system for use with a plurality of game tables of the type used play a primary table game of chance and having a plurality of game player locations adjacent to which a plurality of game players may play and place at least one primary game wager in connection with the primary table of game of chance, the table game video system comprising in combination:

A. a system computing server;

B. a video content distribution network in communication with the system computing server and in dynamically selectable communication with a plurality of video content sources;

C. a plurality of video displays in communication with the system computing server through the video content distribution network, each said video display being mounted adjacent at least one gaming table; and

D. a supplemental video game program portion loaded into the system computing server;

whereby the video displays and system computing server may cooperatively provide at least supplemental video game content viewable by the plurality of game players while at the plurality of game player locations at their respective game tables.

8. The improved table game apparatus of claim 7 also having at least one game table input device being mounted in association with at least one gaming table and in communication the system computing server whereby at least one game player may input commands to the computing unit.

9. The improve table game apparatus of claim 7 wherein the side wagering game program portion, the video display, and the system computing server cooperatively provide a supplemental game display on one of said video displays simultaneously visible to all of said game players at the game player locations at one of said gaming tables.

10. The improved table game apparatus of claim 8 wherein the side wagering game program portion, the video display, system computing server, and game table input device cooperatively provide an interactive supplemental game display visible to the plurality of game players while at the game player locations at the gaming table.

11. The improved table game apparatus of claim 7 also having a plurality of game table input devices, each of said game table input devices being: (i) mounted in association with game table generally within reach of at least one of the plurality of game players when at one of the game player locations; and (ii) in communication with the system computing server.

12. The improved table game apparatus of claim 11 wherein the side wagering game program loaded, the video display, the system computing server, and plurality of game table input devices cooperatively provide an interactive supplemental game display visible to the plurality of game players when at the game player locations at the gaming table.

13. An improved table game system of the type used to play card games in which a plurality of game players may place wagers in connection with the card games, the improved table game system comprising in combination:

A. at least a first and a second card gaming table;

B. a video system associated with the first and second card gaming tables and including:

i. a first video display apparatus in communication with the computer network and mounted in association with the first card gaming table whereby a first game player at the first game table may view first card gaming table side-wager indicia on the video display apparatus;

ii. a second video display apparatus in communication with the computer network and mounted in association with the second card gaming table whereby a second game player at the second card game table may view second card game table side-wager indicia on the video display apparatus;

iii. a video content serving apparatus in communication with multiple video content sources and with the first video display apparatus and the second video display apparatus;

iv. at least a first supplemental game input unit mounted in association with the first card game table whereby the first card game player may input side wagering commands to the video content server; and

v. at least a second supplemental game input unit mounted in association with the first card game table whereby the second card game player may input side wagering commands to the video content server.

14. A method of operating a table gaming business, the method including the steps of:

A. on at least one game table, operating a table game of chance in which one or more game players are provided the opportunity to place wagers on the outcome of a primary table game of chance;

B. providing a video display simultaneously viewable by the one or more game players at the one game table;

C. providing at least one game player with the opportunity to also participate in a supplemental game conducted at least in part in conjunction with supplemental game video content displayed on the video display; and

D. displaying additional non-game video content through the video display.

15. The method of claim 14 wherein the method also includes as step D: the non-game video content on the video display is dynamically alterable and viewable by the one or more game players when at the one game table.

16. The method of claim 15 wherein the non-game video content includes at least a text banner.

17. The method of claim 15 wherein the non-game video content includes at least advertising content.

18. The method of claim 15 wherein the non-game video content includes at least sports content.

19. The method of claim 15 wherein the non-game video content includes at least music entertainment content.

20. A method of operating a table gaming business, the method including the steps of:

A. on each among a plurality of game tables, operating a table game of chance in which one or more game players at said game table are provided the opportunity to place wagers on the outcome of a primary table game of chance;

B. providing a plurality of video displays, each of which video displays being mounted in association with at least one game table among the plurality of game tables and viewable by said one or more game players at said one game table;

C. providing at least one game player with the opportunity to also participate in a supplemental game conducted at

least in part in conjunction with video content displayed on the video display viewable to the at least one game player; and

D. displaying non-game content on one or more among the plurality of video displays.

21. The method of claim 19 wherein the non-game content is dynamically selectable whereby the wagering and non-wagering content is viewable from at least the particular game tables associated with said one or more among the plurality of video displays.

22. The method of claim 20 wherein the non-wagering video content includes at least a text banner.

23. The method of claim 20 wherein the non-wagering video content includes at least advertising content.

24. The method of claim 20 wherein the non-wagering video content includes at least sports content.

25. The method of claim 20 wherein the non-wagering video content includes at least music entertainment content.

26. The method of claim 20 wherein the non-wagering video content includes a plurality of disparate types of video content whereby the type of video content displaying on at least one of the plurality of video displays is dynamically alterable.

27. A method of operating a table gaming business, the method including the steps of:

A. on each among a plurality of game tables, operating a primary table game of chance in which a plurality of game players at said game table are provided the opportunity to place wagers on the outcome of a primary table game of chance;

B. providing a plurality of video displays, each of which video displays being mounted in association with at least one game table among the plurality of game tables and viewable by said plurality of players at each of said game tables;

C. providing at least one game player with the opportunity to also participate in a supplemental game conducted at least in part in conjunction with video content displayed on the video display viewable to the at least one game player; and

D. displaying non-game content on the plurality of video displays.

28. The method of claim 27 wherein the non-game content is dynamically selectable whereby the wagering and non-wagering content is viewable from at least the particular game tables associated with said one or more among the plurality of video displays.

29. The method of claim 27 wherein the non-wagering video content includes at least a text banner.

30. The method of claim 27 wherein the non-wagering video content includes at least advertising content.

31. The method of claim 27 wherein the non-wagering video content includes at least sports content.

32. The method of claim 27 wherein the non-wagering video content includes at least music entertainment content.

33. The method of claim 27 wherein the non-wagering video content includes a plurality of disparate types of video content whereby the type of video content displaying on at least one of the plurality of video displays is dynamically alterable.

34. The method of claim 20 wherein the method also includes the step of receiving supplemental remuneration on behalf of the one game player in connection with participation in the supplemental game.

35. The method of claim 27 wherein the method also includes the step of receiving supplemental remuneration on behalf of the one game player a fee in connection with participation in the supplemental game.

36. The method of claim 20 wherein the supplemental game is a side wager game.

37. The method of claim 27 wherein the supplemental game is a side wager game.

* * * * *