UNITED STATES PATENT AND TRADEMARK OFFICE

BEFORE THE PATENT TRIAL AND APPEAL BOARD

NEW BALANCE ATHLETICS, INC.,

Petitioner,

v.

NIKE, INC.,

Patent Owner.

Case IPR2024-00778
Patent No. 8,266,749

PATENT OWNER'S PRELIMINARY RESPONSE

TABLE OF CONTENTS

I. INTRODUCTION 1

II. THE ’749 PATENT 3

A. Overview of the ’749 patent 3

B. Relevant File History 4

III. Alleged Prior Art References 5

A. Clark 5

B. Mills 8

IV. DEFINITION OF A PERSON OF ORDINARY SKILL IN THE ART 10

V. CLAIM CONSTRUCTION 10

VI. NEW BALANCE HAS NOT ESTABLISHED A REASONABLY LIKELIHOOD OF PREVAILING FOR ANY CHALLENGED CLAIM 12

A. Ground 1: New Balance Fails to Show A Reasonable Likelihood That Clark Anticipates Claims 1, 2, 5–9, 11–13, 15–19, and 21 13

1. Clark does not disclose “knitting” a “textile element” with a “surrounding textile structure” as recited in claims 1 and 13 13

2. Clark does not disclose “removing” the “textile element” from the “surrounding textile structure,” as recited in claims 1 and 13 16

B. Grounds 2–4: New Balance Fails to Show A Reasonable Likelihood That Clark-Based Grounds 2–4 Render Obvious Any Challenged Claim 17

C. Ground 5: New Balance Fails to Show A Reasonable Likelihood That Mills Anticipates Claims 1–8, 11, 13–18, and 21 17

1. Mills does not disclose manufacturing "an article of footwear," as recited in the preamble of claims 1 and 13 17

2. Mills does not disclose a "knitted" textile structure surrounding the textile element, as recited in claims 1 and 13 18

3. Mills does not disclose "incorporating the knitted textile element into the article of footwear," as recited in claims 1 and 13 20

A. Grounds 6–7: New Balance Fails to Show A Reasonable Likelihood That Mills-Based Grounds 6–7 Render Obvious Any Challenged Claim 21

VII. CONCLUSION 21

TABLE OF AUTHORITIES

Page(s)

Cases

Net MoneyIN, Inc. v. Verisign, Inc.,
545 F.3d 1359 (Fed. Cir. 2008) 12

Phillips v. AWH Corp.,
415 F.3d 1303 (Fed. Cir. 2005) 10

Realtime Data, LLC v. Iancu,
912 F.3d 1368 (Fed. Cir. 2019) 11

Silicon Graphics, Inc. v. ATI Techs., Inc.,
607 F.3d 784 (Fed. Cir. 2010) 12

SIMO Holdings, Inc. v. Hong Kong uCloudlink Network Tech. Ltd.,
983 F.3d 1367 (Fed. Cir. 2021) 17

SMIC, Ams. v. Innovative Foundry Techs., LLC,
IPR2020-00837, Paper 13 (PTAB Oct. 9, 2020) 12

Vivid Techs., Inc. v. Am. Sci. & Eng'g, Inc.,
200 F.3d 795, 803 (Fed. Cir. 1999) 12

Statutes

35 U.S.C. § 102 12

EXHIBITS

Exhibit No.	Description
2001	Excerpts of Prosecution History for U.S. Patent No. 8,266,749
2002	Opinion in *adidas AG v. Nike, Inc.*, No. 19-1788 (Fed. Cir. June 25, 2020)
2003	Declaration of Dr. Christopher M. Pastore

I. INTRODUCTION

Patent Owner Nike, Inc. ("Nike") submits this Preliminary Response to the Petition of New Balance Athletics, Inc. ("New Balance") challenging the patentability of Claims 1–21 (the "Challenged Claims") of U.S. Patent No. 8,266,749 (the "'749 patent"; Ex. 1001). New Balance has not established a reasonable likelihood that it will prevail for any claim in any Ground raised in the Petition.

The '749 patent recites methods of manufacturing footwear by knitting textile uppers. The '749 patent has two independent claims (1, 13) and nineteen dependent claims. The claims generally recite methods of (i) simultaneously knitting a textile element and a different, surrounding textile structure; (ii) removing the textile element from the surrounding knitted textile structure; and (iii) incorporating the textile element into an article of footwear. *E.g.*, Ex. 1001 at 11:43–14:5. *See also* Fig. 9; 7:38–9:4. As discussed herein, the patentability of the claims of the '749 patent—which expired on March 3, 2024—have been considered and upheld by the Office on multiple occasions.

New Balance raises seven grounds of invalidity. Only two grounds—Grounds 1 and 5—challenge the independent claims. Both grounds advance an anticipation theory. Ground 1 alleges anticipation based on U.S. Patent No. 2,440,393 ("Clark";

Ex. 1004). Ground 5 alleges anticipation based on Great Britain Patent No. 500,230 ("Mills"; Ex. 1007). Neither Clark nor Mills disclose every limitation of independent claims 1 or 13. In Ground 1, Clark fails to anticipate independent claims 1 or 13 because it doesn't disclose knitting a textile element with or removing the textile element from a "surrounding textile structure." And in Ground 5, Mills fails to anticipate independent claims 1 or 13 because it doesn't disclose manufacturing an "article of footwear," or "incorporating" a textile element into an "article of footwear." Mills also fails to disclose a "knitted" textile structure surrounding the textile element.

The remaining five grounds—Grounds 2, 3, 4, 6, and 7—challenge only dependent claims. All five grounds advance an obviousness theory based on Clark or Mills. Ground 2 alleges obviousness of claims 3, 4, and 14 over Clark in view of Great Britain Patent No. 228,917 ("Müller"; Ex. 1005). Ground 3 alleges obviousness of claims 9, 10, 19, and 20 over Clark in view of a POSITA's knowledge. Ground 4 alleges obviousness of claims 5, 12, and 15 over Clark in view of U.S. Patent No. 6,299,962 ("Davis"; Ex. 1006). Ground 6 alleges obviousness of claims 9, 10, 19, and 20 over Mills in view of a POSITA's knowledge. And Ground 7 alleges obviousness of claim 12 over Mills in view of U.S. Pat. No. 1,093,032 ("Cadenas"; Ex. 1009). Each of these grounds fails for at least the same reasons as

Grounds 1 and 5.

For these reasons and those discussed below, Nike respectfully requests that the Board decline to institute review.

II. THE '749 PATENT

A. Overview of the '749 patent

The '749 patent lists Bhupesh Dua and Edward Nathaniel Thomas as inventors. The '749 patent, now expired, claims priority to U.S. Patent Application No. 10/791,289, filed March 3, 2004 (now U.S. Patent No. 7,347,011, "the '011 Patent").

The '749 patent relates to methods of manufacturing footwear by knitting textile uppers. Specifically, the '749 patent recites methods of knitting textile elements at the same time as a surrounding knitted textile structure. *E.g.*, Ex. 1001 at 11:43–14:5. The knitted textile elements have at least one texture that is different from the texture of the surrounding textile structure. *Id*. The knitted textile elements are then removed from the surrounding textile structure and incorporated into articles of footwear. *E.g.*, *id.* at Figure 9, 7:38–9:4, 11:43–14:5. Independent claims 1 and 13 recite these steps.

The claimed methods offer many advantages over traditional methods of manufacturing footwear. For example, the claimed methods increase sourcing and

manufacturing efficiency by limiting the required number of suppliers, machinery, or different assembly line techniques used to cut or otherwise prepare the material for incorporation into the footwear. *E.g.*, Ex. 1001 at 3:4–23 11:6–9. The claimed methods also reduce the number of steps in the manufacturing process and reduce the number of seams in the final footwear product. *Id.*

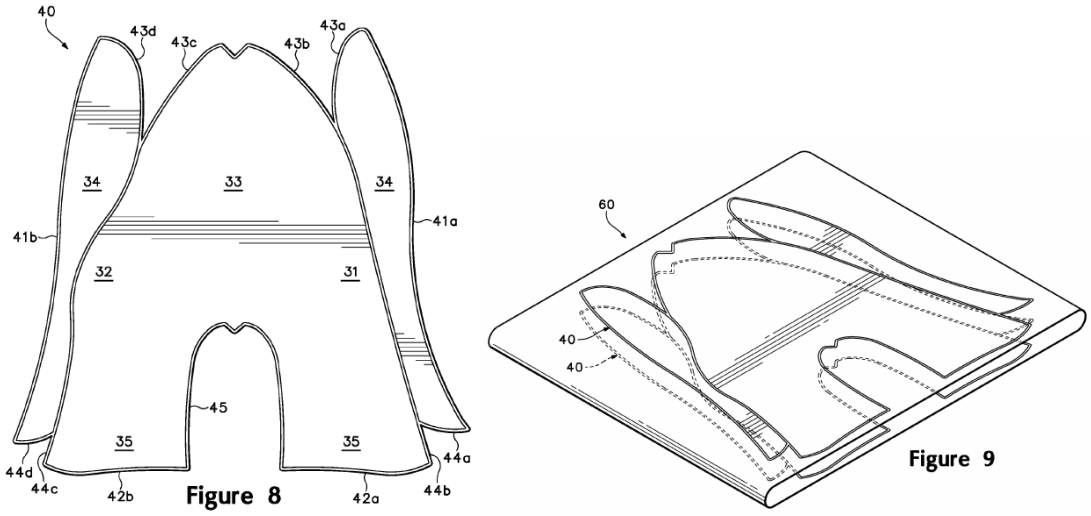

Figures 8 and 9 of the ’749 patent

Figure 8 (reproduced above) shows an example of a textile element with the general shape and form of a footwear upper (or portion of a footwear upper). Figure 9 (reproduced above) shows an example of a tube-shaped cylindrical textile structure “formed with a wide-tube circular knitting machine.” Ex. 1001 at 7:38–39.

B. Relevant File History

The Patent Office has considered the patentability of the claims of the ’749 patent on multiple occasions. During original prosecution of the ’749 patent, the

Examiner twice rejected claims 1–8, 11–18, and 21 as anticipated by U.S. Patent No. 5,345,638 ("Nishida"). Ex. 2001 at 7, 21. The Examiner found Nike's argument that "Nishida fails to disclose a knitted textile element *simultaneously* formed with a knitted textile structure, having a differing texture, during a knitting process" persuasive, and allowed the claims. *Id.* at 26, 39.

In addition to this substantive back and forth with the Examiner during prosecution, the '749 patent has been the subject of serial challenges in *inter partes* review. New Balance's Petition is the third petition filed against the '749 patent. In 2016, adidas filed a petition challenging claims 1–9, 11–19, and 21. *adidas AG v. Nike, Inc.*, IPR2016-00922, Paper 2 at 7 (P.T.A.B. Apr. 19, 2016) (*"adidas IPR*"). The Board ultimately upheld the patentability of all challenged claims. Ex. 1015 at 70. adidas appealed that decision to the Federal Circuit, who then affirmed the patentability of all challenged claims. Ex. 2002 at 2, 8. lululemon also filed a petition earlier this year challenging claims 1–21. *lululemon usa inc. v. Nike, Inc.*, IPR2024-00460, Paper 1 at 19 (P.T.A.B. Jan. 12, 2024) ("*lulu IPR*"). An Institution Decision is due in the *lulu IPR* on August 13, 2024.

III. Alleged Prior Art References

A. Clark

Clark is directed to a process for last-fitting a textile upper. Ex. 1004 at 1:1–

7. Specifically, Clark discloses a method of distributing strands of thermoplastic yarns throughout a knitted fabric, and then "shrinking these strands in the fabric upon [a] last" using heat treatment. *Id.* at 1:18–25. In this way, the "shape of the last is accurately reproduced and permanently retained." *Id.*

Clark's knitted fabric is either "knitted as a strip" which then has "its ends joined," or alternatively is "knitted as a seamless band." *Id.* at 2:12–17. Clark's knitted "strip" is embodied in Figure 5 below.

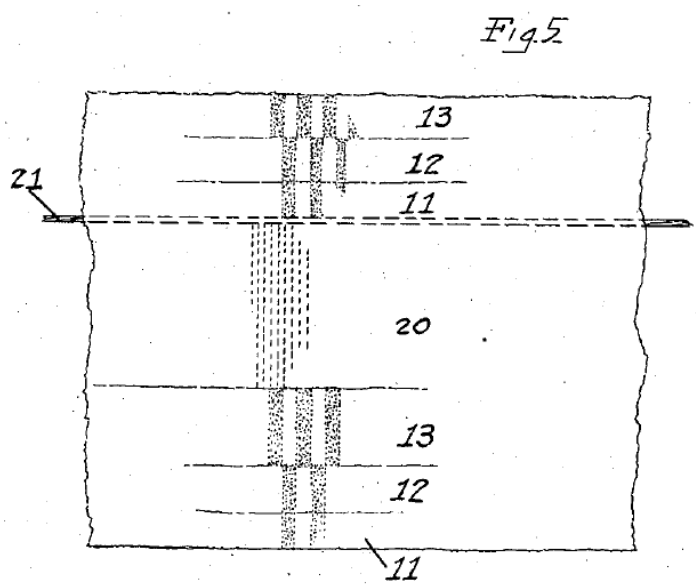

Knitted sections 11–13 ("strip 11–12–13") are made of "sufficient length" to form an "endless band" which is "worked over the last so as to embrace it longitudinally when the two ends of the band are joined." *Id.* at 3:55–59. This is shown in Figure 2 below. Section 20 is a "knitted lining section" that may be "folded down inside the outer sections 11–12–13." *Id.* at 4:43–46, 4:50–53. And parting

thread 21 demarcates one knitted band from an adjacent knitted band. *Id.* at 4:39–43, 4:46–50.

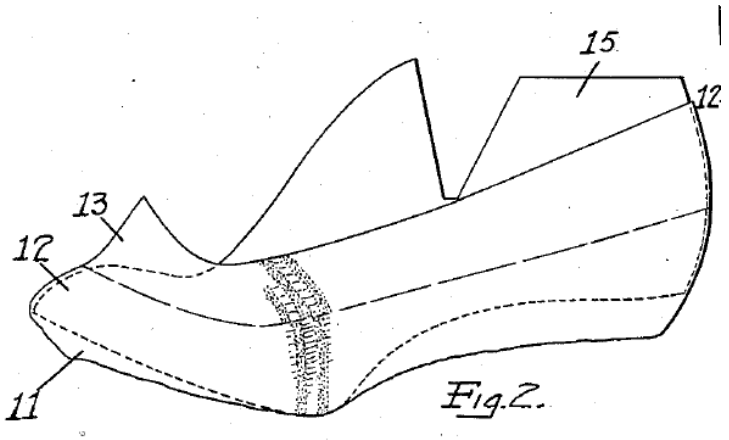

When worked onto the last, section 11 is arranged "under the last bottom" and the "inner edges of this section may be lasted together across the bottom of the last." *Id.* at 3:71–74. Section 12 "extend[s] about the lower curved edge of the last and upwardly over the convex side curvature of the last." *Id.* at 3:24–27. And section 13 is placed on the upper curvature of the last, as shown in Figure 2.

After the knitted band is arranged on the last, the "next step" is to "heat treat[] the upper while tensioned upon the last." *Id.* at 4:4–7. For example, the lasted upper may be exposed to steam. *Id.* at 4:7–21. After heat treating, the thermoplastic strands have "contracted with the fabric" so that the fabric "fits skin tight upon the last conforming accurately to every curve in its contour." *Id.* at 4:21–27. And the thermoplastic strands "become stiff and extremely resilient, being set in the shape

imparted to them by the last." *Id.* at 4:27–31. Figure 4 below shows Clark's "resilient form-fitting upper resulting" from this heat treating process. *Id.* at 4:35–36.

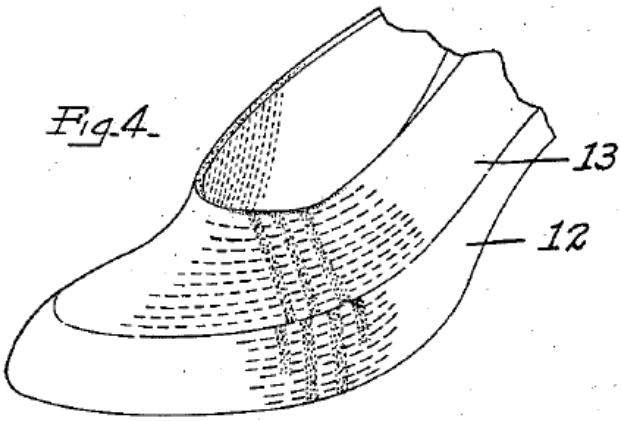

Clark discloses that, after these post-processing steps, the exposed edge at the top of the upper may be trimmed as desired. *Id.* at 4:59–66. The trimmed edge "may be bound or finished as desired." *Id.*

B. Mills

Mills is not directed to footwear at all. Mills is directed to a method for producing a "commercially satisfactory fashioned stocking." Ex. 1007 at 4:19–25. Mills discloses knitting its stocking on a circular knitting machine in a "fabric tube." *Id.* at 5:100–103. From this tube, "a stocking blank of the requisite shape" is cut. *Id.* at 5:110–114. Mills' knitted blank is shown below in Figures 1 and 2.

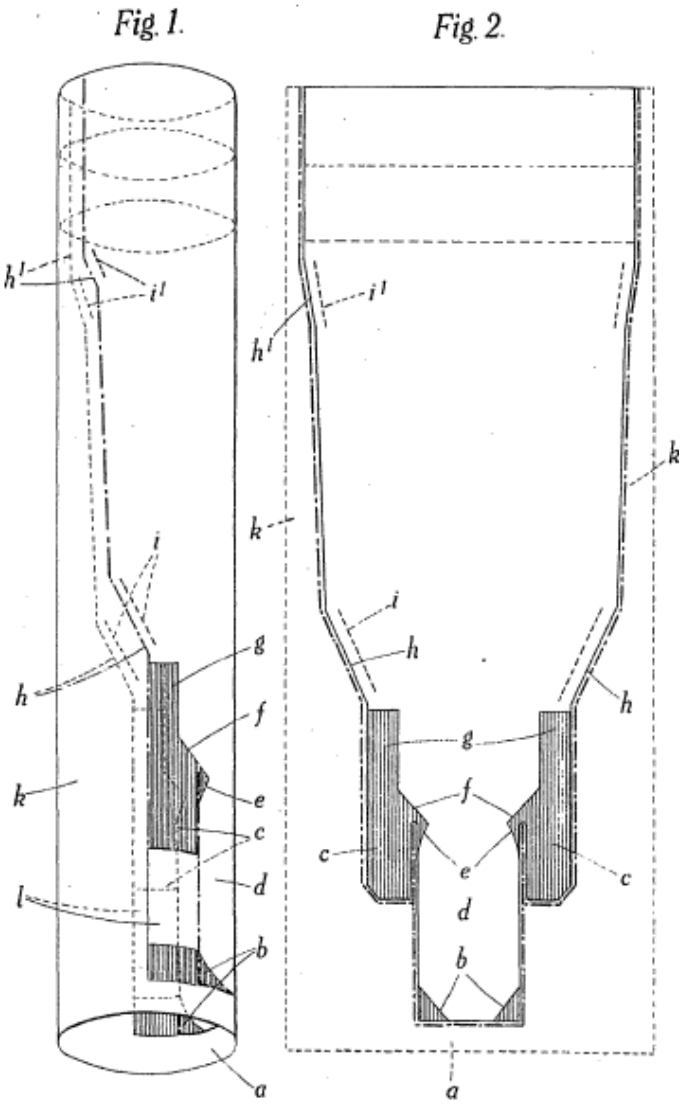

Mills describes that the portion *k* of the tube, from which the blank is cut, is waste material. *Id.* at 3:64–76. The waste material portion of the tube is not knit. "[I]nstead of being knitted," Mills explains, this waste portion is formed by "float[ing]" the "thread laid at each course" over the needles that do not form the blank. *Id.*; *see also id.* at 7:65–75. After removal, the blank is "seam[ed] together" at the "edges of the shaped blank to produce the fashioned leg tube." *Id.*

at 5:114–116.

IV. DEFINITION OF A PERSON OF ORDINARY SKILL IN THE ART

For the purposes of this Preliminary Response only, Nike applies New Balance's proposed level of skill in the art: a POSITA for the '749 patent would have had at least a bachelor's degree in textile engineering, mechanical engineering, or similar technical degree and at least 3 years of experience working with knitted textiles for use in fabric-based articles. Petition at 11; Ex. 1003 at ¶¶28–31. For individuals with different educational backgrounds, a person could still be of ordinary skill in the art provided that person's additional experience compensates for any differences in that person's education as stated above. *Id.* Nike reserves the right to further address New Balance's formulation of a POSITA if trial is instituted.

V. CLAIM CONSTRUCTION

Claims challenged in *inter partes* review proceedings "shall be construed using the same claim construction standard that would be used to construe the claim in a civil action under 35 U.S.C. [§] 282(b)." 37 C.F.R. § 42.100(b). Under this standard, claims "are generally given their ordinary and customary meaning," as understood by a person of ordinary skill. *Phillips v. AWH Corp.*, 415 F.3d 1303, 1312–13 (Fed. Cir. 2005) (citation omitted).

<u>"article of footwear"</u>

Nike contends that the ordinary and customary meaning of the term "article of footwear," as recited in the '749 patent, does not include hosiery, stockings, or socks. Ex. 2003 at ¶¶23–24. This understanding is consistent with and supported by the intrinsic record. For example, the '749 patent specification explains that an "article of footwear" includes two primary elements: "an upper and a sole structure." Ex. 1001 at 1:25–26, 4:43–44; *see also* Petition at 19 (citing Ex. 1001 at 4:43–44). Hosiery, stockings, and socks do not have sole structures. Every figure of the '749 patent confirms this ordinary and customary meaning. *See id.* at Figs. 1–14. The figures depict knitted textile elements which are designed to be, or are, incorporated into a shoe. This meaning is further confirmed by the surrounding language of the claims. Independent claims 1 and 13 recite knitting a textile element that is "incorporated" into an article of footwear. *Id.* at 11:51–52, 12:42–43. This means that the textile element alone does not constitute an "article of footwear." Ex. 2003 at ¶24. Thus, articles such as hosiery, stockings, or socks are not "articles of footwear" as that term is used in the '749 patent.

For purposes of this IPR, Nike contends that no other terms require construction. *See Realtime Data, LLC v. Iancu*, 912 F.3d 1368, 1375 (Fed. Cir. 2019)

("The Board is required to construe 'only those terms … in controversy, and only to the extent necessary to resolve the controversy.'") (quoting *Vivid Techs., Inc. v. Am. Sci. & Eng'g, Inc.*, 200 F.3d 795, 803 (Fed. Cir. 1999)). All other terms and phrases in the '749 patent claims have their ordinary and customary meanings, which are readily apparent, and no further construction is required.

VI. NEW BALANCE HAS NOT ESTABLISHED A REASONABLY LIKELIHOOD OF PREVAILING FOR ANY CHALLENGED CLAIM

New Balance bears the burden on institution of "demonstrating a reasonable likelihood that it will prevail in showing the unpatentability of at least one claim." *SMIC, Ams. v. Innovative Foundry Techs., LLC*, IPR2020-00837, Paper 13 at 13–14 (PTAB Oct. 9, 2020) (citing 35 U.S.C. §§ 314(a) and 312(a)(3)). In making this showing, New Balance's Petition must identify "the evidence that supports the grounds for the challenge to each claim." *Id*. New Balance has not met that burden.

New Balance alleges that independent claims 1 and 13 of the '749 patent are invalid as anticipated under 35 U.S.C. § 102. Anticipation requires "that a single prior art reference discloses each and every element of a claimed invention." *Silicon Graphics, Inc. v. ATI Techs., Inc.*, 607 F.3d 784, 796 (Fed. Cir. 2010). A reference must not only explicitly or inherently disclose every claimed element, but those elements must also be arranged within that reference as they are in the claim. *Net MoneyIN, Inc. v. Verisign, Inc.*, 545 F.3d 1359, 1369–71 (Fed. Cir. 2008).

Disclosures from multiple, distinct embodiments of a prior art reference cannot be combined to anticipate the challenged claim. *Id.* at 1371. And "differences between the prior art reference and a claimed invention, however slight, invoke the question of obviousness, not anticipation." *Id.*

A. Ground 1: New Balance Fails to Show A Reasonable Likelihood That Clark Anticipates Claims 1, 2, 5–9, 11–13, 15–19, and 21

New Balance fails to show a reasonable likelihood that Clark anticipates any challenged claim in Ground 1. Ex. 2003 at ¶34.

1. Clark does not disclose "knitting" a "textile element" with a "surrounding textile structure" as recited in claims 1 and 13

Clark does not disclose "simultaneously knitting a textile element with a surrounding textile structure," as recited in claim 1. Clark also fails to disclose a substantially similar limitation recited in independent claim 13.[1] Ex. 2003 at ¶35.

New Balance points to two aspects of Clark as disclosing this limitation. Petition at 20–22. Neither discloses a "surrounding textile structure."

First, New Balance points to the "strip of material at the parting strand" depicted in Figure 5 as a "surrounding textile structure" from which Clark's upper

[1] Independent claim 13 recites "knitting a first textile element and a second textile element simultaneously with knitting a surrounding textile structure."

is removed. *Id.* at 21, 51; Ex. 1003 at ¶¶122, 216. New Balance's annotated version of Clark's Figure 5—which depicts Clark's "knitted strip"—is reproduced below. *Id.* Sections 11, 12, and 13 (and potentially lining section 20) of Clark's knitted strip form the "portion of material that becomes the upper." *Id.*

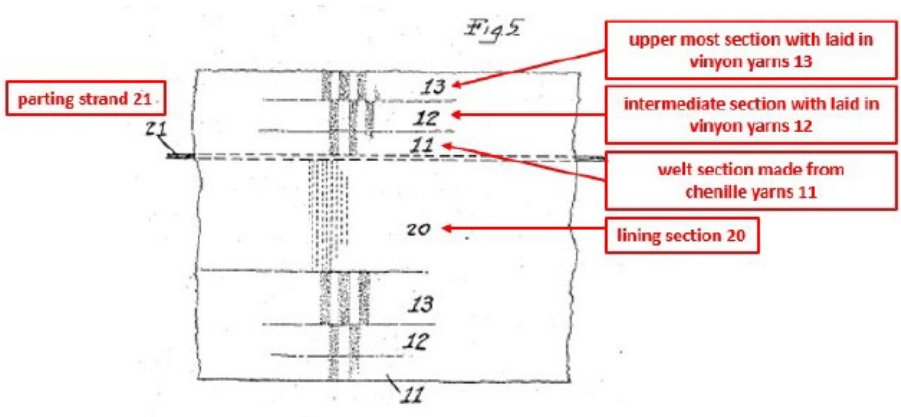

But the "strip of material at the parting strand" that New Balance identifies as the "surrounding textile structure" does not "surround" Clark's sections 11, 12, and 13. Petition at 24. The strip of material that becomes the upper is separated at a parting strand along one or, at most, two sides. Ex. 1004 at 4:39–43, Fig. 5. During removal of strip 11–12–13 from the knitted fabric, the vertical edges of strip 11–12–13 are not removed from any material. Ex. 2003 at ¶¶36–37. Instead, the vertical edges are joined together without any post-processing steps. *Id.*; Ex. 1004 at 3:55–59 ("The composite knitted strip [] is made of sufficient length to form an endless band which may be worked over the last so as to embrace it longitudinally when the two ends of the band are joined."), 3:63–66 ("[It] may be assumed [] that the two ends of the

strip 11–12–13 are united by stitching or binding corresponding to the back seam usually found in uppers.”).

Second, New Balance points to the “exposed edges” of Clark’s upper, depicted in Figure 2, as a “surrounding textile structure” from which the upper is removed. Petition at 21. New Balance argues that these “exposed edges are further trimmed to finish the upper.” *Id.* at 21–22. Dr. Brookstein elaborates that “[i]n this trimming process, [] potions [sic] of the material at the bottom of the shoe, and potentially at the top of the shoe, would have exposed edges that could be trimmed.” Ex. 1003 at ¶128.

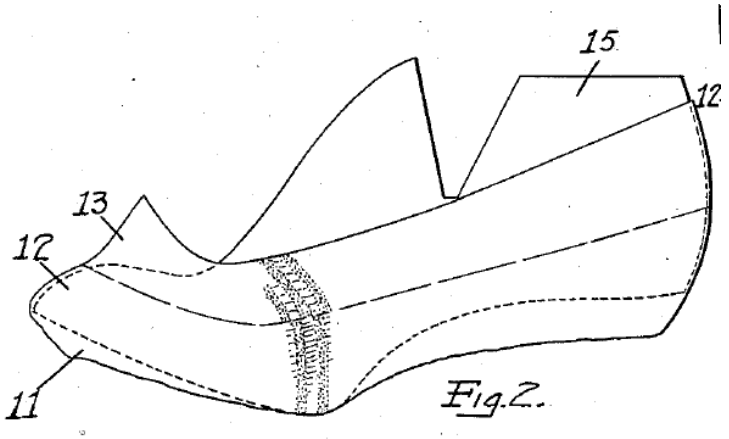

But when Clark discusses the potential trimming of an “exposed edge” (singular), Clark is referring only to top edge 13. *Id.* at 4:61–66; Ex. 2003 at ¶38. Clark never discloses that the bottom edge of strip 11–12–13 is exposed or trimmed. Ex. 2003 at ¶38; Ex. 1004 at 3:71–74 (“The welt section 11 is brought in under the last bottom

and the inner edges of this section may be lasted together across the bottom of the last."). The exposed top edge 13—even if trimmed—is not a *surrounding* textile structure. At least two of four edges of strip 11–12–13 remain intact in all embodiments. Ex. 2003 at ¶38. Nothing surrounds these edges. *Id.* A POSITA reading the '749 patent in 2004 would not have understood a lengthwise strip knitted in a rectangular fabric, like Clark's, to have been knitted with a *surrounding* textile structure. *Id.*

Thus, New Balance has not shown a reasonable likelihood of prevailing on any challenged claim in Ground 1.

2. Clark does not disclose "removing" the "textile element" from the "surrounding textile structure," as recited in claims 1 and 13

Clark does not disclose "removing the knitted textile element from the surrounding knitted textile structure," as recited in claim 1. Claim 13 recites a similar limitation.[2] Because Clark fails to disclose knitting a textile element with a "surrounding textile structure" (*see supra* § VI.A.1), Clark also fails to disclose removing the textile element from a "surrounding textile structure." Ex. 2003 at ¶40.

[2] Independent claim 13 recites "removing the first and second knitted textile elements from the knitted textile structure."

B. Grounds 2–4: New Balance Fails to Show A Reasonable Likelihood That Clark-Based Grounds 2–4 Render Obvious Any Challenged Claim

For at least the reasons discussed above with respect to Ground 1, Clark does not disclose each and every feature of independent claims 1 and 13. For at least the same reasons, Clark in combination with Müller, Davis, or the knowledge of a POSITA does not teach or suggest any claim depending from independent claims 1 and 13.

C. Ground 5: New Balance Fails to Show A Reasonable Likelihood That Mills Anticipates Claims 1–8, 11, 13–18, and 21

New Balance fails to show a reasonable likelihood that Mills anticipates any challenged claim in Ground 5. Ex. 2003 at ¶42.

1. Mills does not disclose manufacturing "an article of footwear," as recited in the preamble of claims 1 and 13

Mills does not disclose manufacturing "an article of footwear," as recited in the preamble of independent claims 1 and 13. The preamble of claims 1 and 13 is limiting because it provides antecedent basis for the limitation "the article of footwear" appearing later in the body of those claims. *See SIMO Holdings, Inc. v. Hong Kong uCloudlink Network Tech. Ltd.*, 983 F.3d 1367, 1375–76 (Fed. Cir. 2021) ("We have repeatedly held a preamble limiting when it serves as the antecedent basis for a term appearing in the body of a claim."). For example, claim

limitations 1[c] and 13[d] recite "incorporating the knitted textile element into *the* article of footwear." Ex. 1001 at 11:42–52, 12:37–43 (emphasis added).

New Balance alleges that Mills' stocking is an article of footwear. Petition at 45 (citing Ex. 1003 at ¶¶197–199). But a POSITA reading claims 1 and 13 in light of the '749 patent specification in 2004 would not have understood Mills' "stockings" to be "articles of footwear." *See supra* § V; Ex. 2003 at ¶43. Mills fails to disclose the preamble of claims 1 and 13, and therefore fails to anticipate any challenged claim in Ground 5.

2. Mills does not disclose a "knitted" textile structure surrounding the textile element, as recited in claims 1 and 13

Independent claims 1 and 13 recite that the knitted "textile element" is surrounded by a "knitted" textile structure. Mills does not disclose a "knitted" textile structure surrounding the textile element. Ex. 2003 at ¶44.

New Balance alleges that the waste material *a* and *k* in Mills' Figure 2 is a "surrounding textile structure" as recited in claims 1 and 13. Petition at 46. According to New Balance, the "stocking blank" depicted in Mills' Figure 2 is an "element that is knit within a surrounding textile structure that is not incorporated into the stocking." *Id.*

Fig. 2.

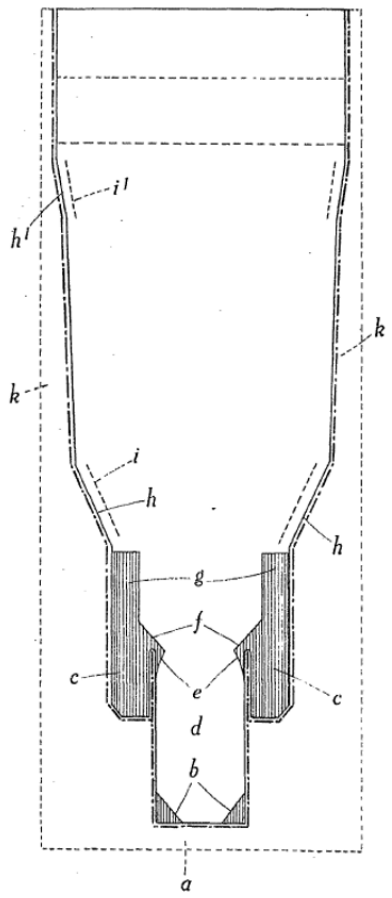

But Mills discloses that only waste area *a*, which constitutes a "small parallel portion of fabric [of] approximately one inch," is knit. Ex. 1007 at 7:35–38; Ex. 2003 at ¶45. By contrast, Mills discloses that "waste area" *k*, which forms the vast majority of the waste portion, is not knitted at all. Ex. 2003 at ¶45. Regarding waste area *k*, Mills discloses that the "waste" portions of the fabric "float over the requisite number of needles, instead of being knitted." Ex. 1007 at 3:64–76. Thus, area *k* is "composed of float threads," which are formed without loops. *Id.* at 7:65–75. This

is different from knitting, which a POSITA would have understood must include the formation of loops. Ex. 1001 at 2:53–56; Ex. 2003 at ¶46. A POSITA would not have understood textile structure that abuts a textile element only on one edge, like waste area *a* in Figure 2 of Mills, to "surround" the textile element.

Because Mills fails to disclose a "knitted" textile structure surrounding the textile element, Mills fails to anticipate any challenged claim in Ground 5.

3. Mills does not disclose "incorporating the knitted textile element into the article of footwear," as recited in claims 1 and 13

Mills does not disclose "incorporating the knitted textile element into the article of footwear," as recited in claim 1. Mills also fails to disclose a substantially similar limitation recited in independent claim 13.[3] Ex. 2003 at ¶48. As discussed above in Section VI.C.1, Mills doesn't disclose an "article of footwear," as a POSITA would have understood that claim term.

Additionally, New Balance fails to show that Mills' method of manufacturing a stocking includes incorporating its knitted blank into an article of footwear. New Balance alleges Mills meets this limitation because its stocking is "cut[] from the fabric" and "seam[ed] together" to form the "fashioned leg tube." Petition at 50.

[3] Independent claims 13 recites "incorporating at least one of the first and second knitted textile elements into the article of footwear."

New Balance also says that the "leg tube" is "part of a 'commercially satisfactory fashioned stocking.'" *Id.* (citing Ex. 1007 at 1:19–25); *see also id.* at 54–55. Dr. Brookstein only repeats New Balance's argument, merely adding that "[a] stocking is an article of footwear." Ex. 1003 at ¶¶212–213, 222–223. Neither New Balance nor Dr. Brookstein allege a step of incorporating, or explain how Mills' "fashioned leg tube" is incorporated, into anything. Ex. 2003 at ¶49.

For this reason, Mills fails to anticipate any challenged claim in Ground 5.

A. Grounds 6–7: New Balance Fails to Show A Reasonable Likelihood That Mills-Based Grounds 6–7 Render Obvious Any Challenged Claim

For at least the reasons discussed above with respect to Ground 5, Mills does not disclose each and every feature of independent claims 1 and 13. For at least the same reasons, Mills in combination with Cadenas or the knowledge of a POSITA does not teach or suggest any claim depending from independent claims 1 and 13.

VII. CONCLUSION

For the reasons set forth above, Nike respectfully requests that the Board deny institution of the Petition for all Challenged Claims of the '749 patent.

Dated: August 9, 2024

/s/ Michael J. Harris
Michael J. Harris (Reg. No. 62,957)
Aaron P. Bowling (Reg. No. 67,311)
Arnold & Porter Kaye Scholer LLP
70 West Madison Street, Suite 4200

Chicago, IL 60602-4231
Tel: (312) 583-2300
Fax: (312) 583-2360

Lindsey C. Staubach (Reg. No. 76,738)
Arnold & Porter Kaye Scholer LLP
601 Massachusetts Avenue, NW
Washington, DC 20001-3743
Tel: (202) 942-5000

Attorneys for Patent Owner Nike, Inc.

CERTIFICATE OF WORD COUNT

Under the provisions of 37 C.F.R. § 42.24(d), the undersigned hereby certifies that the Microsoft Office word count including all footnotes for the foregoing Patent Owner's Preliminary Response, excluding the table of contents, table of authorities, certificate of word count, appendix and certificate of service, totals 4,057 words, which is less than the 14,000 words allowed under 37 C.F.R. § 42.24(b)(1).

Dated: August 9, 2024

/s/ Michael J. Harris

Michael J. Harris (Reg. No. 62,957)
Arnold & Porter Kaye Scholer LLP
70 West Madison Street, Suite 4200
Chicago, IL 60602-4231
Tel: (312) 583-2300
Fax: (312) 583-2360

CERTIFICATE OF SERVICE

The undersigned hereby certifies service on the Petitioner, pursuant to 37 C.F.R. § 42.6(e) and by agreement of counsel, by electronic (e-mail) delivery of a true copy of the foregoing **PATENT OWNER'S PRELIMINARY RESPONSE**, which was served on August 9, 2024 to the following Counsel for Petitioner via e-mail:

Linnea Cipriano (Reg. No. 67,729)
Douglas J. Kline (Reg. No. 35,574)
Goodwin Procter LLP
620 Eighth Ave
New York, NY 10018
lcipriano@goodwinlaw.com
dkline@goodwinlaw.com
DG-NB-NIKE@goodwinlaw.com

/s/ Timothy Haugh
Timothy Haugh