UNITED STATES PATENT AND TRADEMARK OFFICE

BEFORE THE PATENT TRIAL AND APPEAL BOARD

NEW BALANCE ATHLETICS, INC.,

Petitioner,

v.

NIKE, INC.,

Patent Owner.

Case IPR2024-00778
Patent No. 8,266,749

DECLARATION OF CHRISTOPHER M. PASTORE, PH.D., IN SUPPORT OF PATENT OWNER'S PRELIMINARY RESPONSE

New Balance v. NIKE
IPR2024-00778
Patent No. 8,266,749
Ex. 2003

TABLE OF CONTENTS

Page

I. INTRODUCTION 1

II. BACKGROUND AND EXPERIENCE 2

III. COMPENSATION AND PRIOR TESTIMONY 3

IV. MATERIALS CONSIDERED 4

V. LEGAL STANDARDS 4

VI. LEVEL OF ORDINARY SKILL IN THE ART 5

VII. THE ’749 PATENT 6

VIII. CLAIM CONSTRUCTION 8

IX. OVERVIEW OF THE PRIOR ART REFERENCES 9

A. Clark 9

B. Mills 12

X. GROUND 1: CLARK FAILS TO DISCLOSE CLAIMS 1, 2, 5–9, 11–13, 15–19, and 21 14

A. Clark does not disclose “knitting” a “textile element” with a “surrounding textile structure” as recited in claims 1 and 13 14

B. Clark does not disclose “removing” the “textile element” from the “surrounding textile structure,” as recited in claims 1 and 13 16

XI. GROUND 5: MILLS FAILS TO DISCLOSE CLAIMS 1–8, 11, 13–18, and 21 17

A. Mills does not disclose manufacturing "an article of footwear," as recited in the preamble of claims 1 and 13 17

B. Mills does not disclose a "knitted textile structure" that "surrounds" the textile element(s), as recited in claims 1 and 13 17

C. Mills does not disclose "incorporating the knitted textile element into the article of footwear," as recited in claims 1 and 13 20

I, Christopher M. Pastore, Ph.D., declare as follows:

I. INTRODUCTION

1. I have been retained by Nike ("Patent Owner") as an independent expert in this *inter partes* review ("IPR") proceeding before the Patent Trial and Appeal Board ("PTAB"), which I understand involves U.S. Patent No. 8,266,749 ("the '749 Patent"). I am being compensated for my time at my usual consulting rate of $300 per hour for my work associated with this matter. No part of my compensation is dependent on the outcome of this proceeding, and I have no other interest in this proceeding.

2. I understand that this proceeding involves Claims 1–21 (the "Challenged Claims") of the '749 Patent. I further understand that Petitioner New Balance Athletics, Inc. ("New Balance") raises seven grounds in the Petition for IPR. I understand that the raised grounds relate to the following references:

Reference	Exhibit
U.S. Patent No. 2,440,393 ("Clark")	Ex. 1004
G.B. Patent No. 228,917 ("Müller")	Ex. 1005
U.S. Patent No. 6,299,962 ("Davis")	Ex. 1006
G.B. Patent No. 500,230 ("Mills")	Ex. 1007
U.S. Patent No. 1,093,032 ("Cadenas")	Ex. 1009

3. For purposes of this declaration, I have been asked to provide my opinions in response to New Balance's Grounds 1 and 5. I understand that Ground 1 challenges claims 1, 2, 5–9, 11–13, 15–19, and 21 as anticipated by Clark. Petition at 14. And I understand that Ground 5 challenges claims 1–8, 11, 13–18, and 21 as anticipated by Mills. *Id.* I further understand that these are the only grounds challenging independent claims 1 and 13. My opinions for those grounds are set forth below.

II. BACKGROUND AND EXPERIENCE

4. My qualifications for forming the opinions set forth in this declaration are summarized in the following paragraphs and explained in more detail in my curriculum vitae which is attached Exhibit A to this report. Exhibit A also includes a list of my publications and research activities.

5. I am the Assistant Provost, Faculty Development in Classroom Pedagogy and Nexus Learning, and a Professor of Transdisciplinary Studies at Thomas Jefferson University in Philadelphia, Pennsylvania. I am also an Honorary Research Professor in the Department of Clothing and Textiles at Durban University of Technology in Durban, South Africa.

6. I have a Ph.D. in Materials Science from Drexel University, where I wrote my thesis: A Processing Science Model for Three Dimensional Braiding. I have written or had my writings included in nearly twenty books related to textiles.

I have nearly fifty refereed publications related to textiles. I have produced nearly ninety presentations and non-refereed publications on textiles and fabrics. I have won numerous awards related to my writings in and experience with textiles.

7. I have worked in textile and materials engineering and textile engineering since 1984. I have a broad range of experience in warp and weft knitting, computer modelling of textile structures, defects in fabrics, mechanical properties of textiles, 4D textiles, structural and textile composites, and three-dimensional weaving.

III. COMPENSATION AND PRIOR TESTIMONY

8. I have previously been qualified as an expert and admitted to testify about textile design, engineering, and manufacturing. Attached as Exhibit B is a list of cases in which I have provided testimony in the last five years. To the best of my knowledge, no court has ever excluded or prohibited me from providing trial testimony as an expert witness.

9. Although I am being compensated for my time at a rate of $300 per hour for my work in this matter, the opinions herein are my own and I have no stake in the outcome of this matter. My compensation does not depend in any way on the outcome of the matter or my opinions.

IV. MATERIALS CONSIDERED

10. All my opinions are based on my knowledge and professional judgment, and the following documents that I considered:

- New Balance's Petition for IPR of U.S. Patent No. 8,266,749;
- Exhibits 1001–1018; and
- all other materials discussed herein.

11. I reserve the right to amend or supplement the opinions provided in this declaration if trial is instituted.

V. LEGAL STANDARDS

12. I am not an attorney. For purposes of this Declaration, I have been informed by counsel about certain aspects of the law that are relevant to my opinions. My understanding of the law is summarized below.

13. I understand from counsel that in an *inter partes* review, claim terms should be construed "in accordance with the ordinary and customary meaning of such claim as understood by one of ordinary skill in the art and the prosecution history pertaining to the patent." 37 C.F.R. § 42.100(b). I understand from counsel that the ordinary and customary meaning is determined primarily in view of the patent's specification and prosecution history, but that extrinsic evidence such as dictionaries and treatises, as well as the opinions of persons of ordinary skill in the art ("POSITA"), may also be taken into account.

14. I understand from counsel that, in this *inter partes* review, Petitioner has the burden of proving that each challenged claim is unpatentable by a preponderance of the evidence. I understand that New Balance has challenged both independent claims of the '749 patent only under an anticipation theory. I understand from counsel that, to anticipate a claim, a single prior art reference must disclose each and every element of the claim. I further understand that the reference must not only disclose every element of the claim, but it must disclose those elements as arranged in the claim. I understand that even slight differences between a prior art reference and the claimed invention may make a showing of anticipation insufficient.

VI. LEVEL OF ORDINARY SKILL IN THE ART

15. I understand from counsel that New Balance asserts a POSITA in the relevant field of the '749 Patent would have had (1) at least a bachelor's degree in textile engineering, mechanical engineering, or similar technical degree, and (2) at least 3 years of experience working with knitted textiles for use in fabric-based articles. Petition at 11; Ex. 1003 at ¶¶28–31. For purposes of this declaration, I apply New Balance's definition of a POSITA.

16. In view of my experience and qualifications noted above, I am well positioned to opine as to what a POSITA at the time of the invention would have understood and done.

17. My opinions contained herein are from the perspective of a POSITA. My opinions reflect how a POSITA would have interpreted the claims, the prior art, and any available evidence.

18. My opinions are based on generally-accepted methodologies in the textile and knitting communities.

VII. THE '749 PATENT

19. The '749 patent relates to methods of manufacturing footwear by knitting textile uppers. Independent claims 1 and 13 of the '749 patent recite methods of knitting textile elements at the same time as a surrounding textile structure. *E.g.*, Ex. 1001 at 11:43–14:5. The knitted textile elements have at least one texture that is different from the texture of the surrounding textile structure. *Id*. The knitted textile elements are then removed from the surrounding textile structure and incorporated into articles of footwear. *E.g.*, *id.* at Figure 9, 7:38–9:4, 11:43–14:5.

20. The '749 patent further discloses that the knitted textile element(s) and surrounding knitted textile structure can be produced using warp knitting machines and weft knitting machines, including circular knitting machines. *E.g.*, Ex. 1001. at 7:9–8:8. The textile elements can be removed from the surrounding textile structure using "die-cutting, laser-cutting, or other conventional cutting operation[s]." *E.g.*, *id.* at 8:4–8.

21. The claimed methods provide many benefits over conventional methods of manufacturing footwear. The claimed methods increase efficiency by limiting the required number of suppliers, machinery, or different assembly line techniques to cut or otherwise prepare the material for incorporation into the footwear. *E.g.*, Ex. 1001 at 3:4–25, 11:6–9. The claimed methods also reduce the number of steps in the manufacturing process and reduce the number of seams in the final footwear product. *Id.*

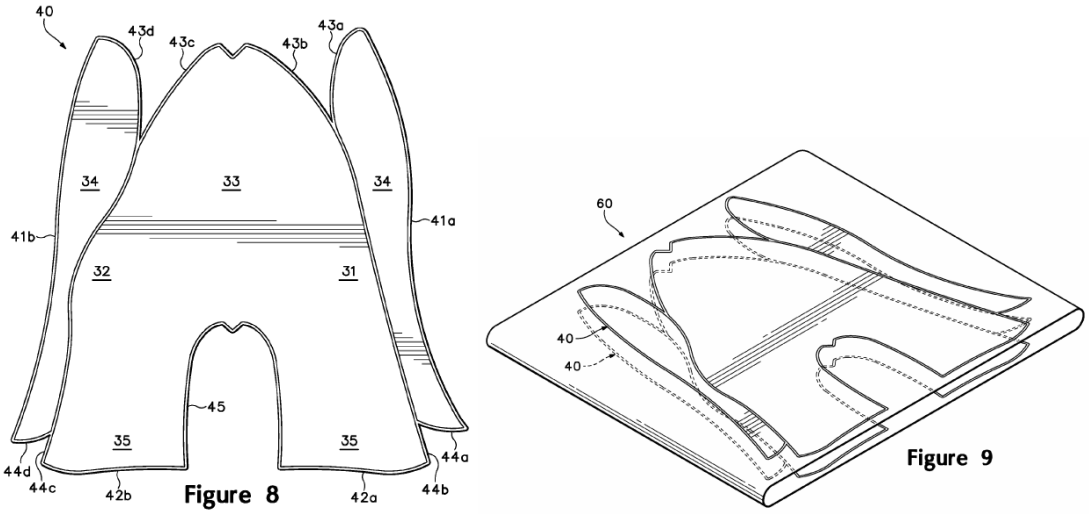

Figures 8 and 9 of the ’749 patent

22. Figure 8 shows an example of a textile element with the general shape and form of a footwear upper. Figure 9 shows an example of a tube-shaped cylindrical textile structure “formed with a wide-tube circular knitting machine.” Ex. 1001 at 7:38–39.

VIII. CLAIM CONSTRUCTION

23. For purposes of this declaration, I have been asked to provide my opinion about the ordinary and customary meaning of "article of footwear," which is recited in independent claims 1 and 13. In my opinion, a POSITA reading the claims in light of the '749 patent specification in 2004 would have understood that an "article of footwear" does not include hosiery, stocking, socks, or the like. This is also consistent with my professional understanding of how the term "article of footwear" is used in the art. The '749 patent specification discusses that "[c]onventional articles of athletic footwear include two primary elements, an upper and a sole structure." Ex. 1001 at 1:25–26. The '749 patent specification further discloses that "[t]he primary elements of footwear 10 are depicted in FIG. 1 as being a sole structure 20 and an upper 30." *Id.* at 4:43–44. And every figure of the '749 patent depicts knitted textile elements which are designed to be, or are, incorporated into a shoe. *Id.* at Figs. 1–14. In my opinion, a POSITA would have understood that "article of footwear," in the context of the intrinsic record, is a shoe.

24. The language of the claims also supports my opinion. Independent claims 1 and 13 recite "incorporating" a knitted textile element into the "article of footwear." *Id.* at 11:51–52, 12:42–43. This means the textile element must be combined with another component to form the article of footwear. That language is consistent with the understanding that the textile element would be paired with a sole

structure. Thus, in my opinion, an "article of footwear" would not include hosiery, stockings, socks, etc.

25. I understand that all other terms and phrases in the '749 patent claims have their ordinary and customary meanings and that no further construction is required. I reserve the right to offer opinions on any claim constructions that arise if this IPR is instituted.

IX. OVERVIEW OF THE PRIOR ART REFERENCES

A. Clark

26. Clark relates to a process for last-fitting a textile upper. Ex. 1004 at 1:1–7. Clark discloses that thermoplastic yarns are distributed throughout a fabric in a knitting process, and then "shrinking" those strands on a last using heat treatment. *Id.* at 1:18–25. As a result, the "shape of the last is accurately reproduced and permanently retained." *Id.*

27. Clark's knitted fabric is either knitted flat, as a "strip" which then has "its ends joined," or alternatively is knitted as a "seamless band." *Id.* at 2:12–17. An embodiment of Clark's knitted "strip" is shown in Figure 5 below.

Fig. 5

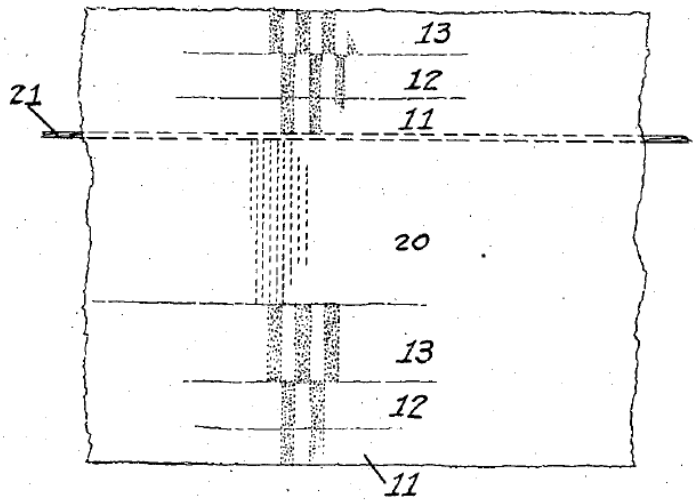

28. Knitted sections 11, 12, and 13 ("strip 11–12–13") are made of "sufficient length" to form an "endless band" which is "worked over the last so as to embrace it longitudinally when the two ends of the band are joined." *Id.* at 3:55–59. Figure 2 below shows strip 11–12–13 worked over the last. Clark describes that section 20 is a "knitted lining section" that may be "folded down inside the outer sections 11–12–13" to form a two-layer upper. *Id.* at 4:43–46, 4:50–53. Parting thread 21 demarcates one knitted band from an adjacent knitted band. *Id.* at 4:39–43, 4:46–50.

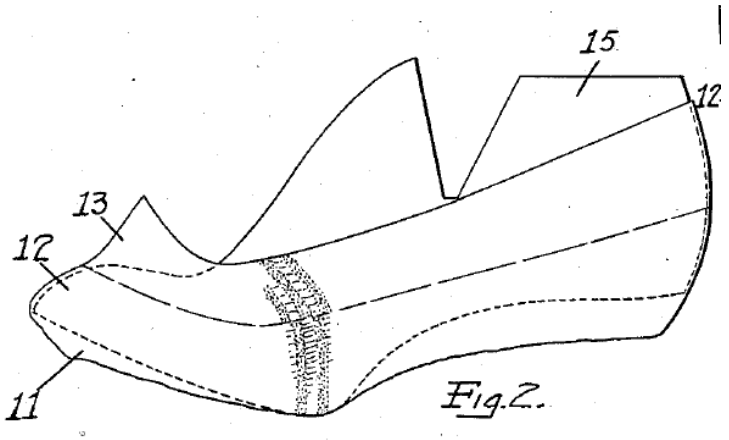

29. When worked over the last, section 11 is arranged "under the last bottom" and the "inner edges of this section may be lasted together across the bottom of the last." *Id.* at 3:71–74. Section 12 "extend[s] about the lower curved edge of the last and upwardly over the convex side curvature of the last." *Id.* at 3:24–27. Section 13 is placed on the upper curvature of the last, as shown in Figure 2.

30. After lasting, the "next step" is to "heat treat[] the upper while tensioned upon the last." *Id.* at 4:4–7. This heat treatment may include, for example, steam treatment. *Id.* at 4:7–21. During heat treatment, the thermoplastic strands "contract[] with the fabric" so that the fabric "fits skin tight upon the last conforming accurately to every curve in its contour." *Id.* at 4:21–27. The thermoplastic strands "become stiff and extremely resilient, being set in the shape imparted to them by the last." *Id.* at 4:27–31. Figure 4 below shows Clark's "resilient form-fitting upper resulting" from this heat treating process. *Id.* at 4:35–36.

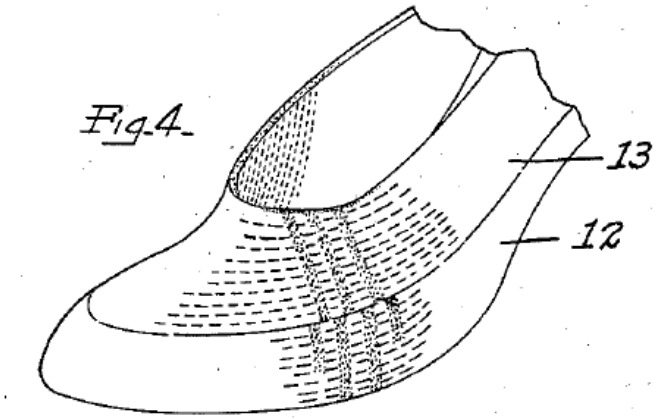

31. Clark discloses that the exposed edge (the top of the upper) may be trimmed as desired only after these post-processing steps. *Id.* at 4:59–66. The trimmed edge "may be bound or finished as desired." *Id.*

B. Mills

32. Mills does not concern footwear. Mills is directed to a method for producing a "commercially satisfactory fashioned stocking." Ex. 1007 at 4:19–25. Mills discloses knitting its stocking on a circular knitting machine in the form of a "tube." *Id.* at 5:100–103. From this tube, "a stocking blank of the requisite shape" is cut. *Id.* at 5:110–114. An embodiment of Mills' knitted blank is shown in Figures 1 and 2 below.

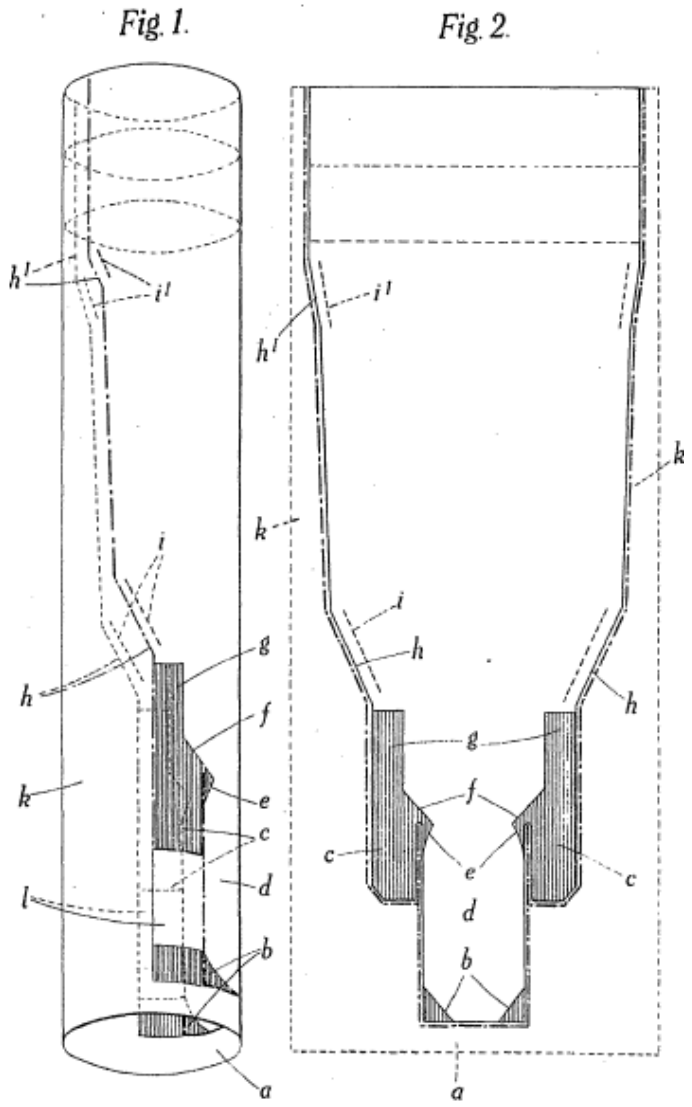

33. Cut away portion *k* is waste material. *Id.* at 3:64–76. Mills explains that it does not knit this portion. "[I]nstead of being knitted," this waste portion is formed by "float[ing]" the "thread laid at each course" over the needles that do not form the blank. *Id.*; *see also id.* at 7:65–75. After removal, the blank is "seam[ed] together" at the "edges of the shaped blank to produce the fashioned leg tube." *Id.* at 5:114–116.

X. GROUND 1: CLARK FAILS TO DISCLOSE CLAIMS 1, 2, 5–9, 11–13, 15–19, and 21

34. In my opinion, Clark fails to disclose all of the features of independent claims 1 and 13. Thus, Clark fails to disclose any challenged claim in Ground 1.

A. Clark does not disclose "knitting" a "textile element" with a "surrounding textile structure" as recited in claims 1 and 13

35. In my opinion, Clark does not disclose "knitting" a "textile element" with a "*surrounding* textile structure," as recited in claim 1. Claim 13 similarly recites that a "first textile element" and a "second textile element" are simultaneously knitted with a "surrounding textile structure."

36. New Balance and Dr. Brookstein contend that Clark's Figure 5 discloses a "portion of material that becomes the upper," i.e., a "textile element," that is knitted in a larger piece of fabric, i.e., a "surrounding textile structure." Petition at 21; Ex. 1003 at ¶122. New Balance's annotated version of Clark's Figure 5 is shown below.

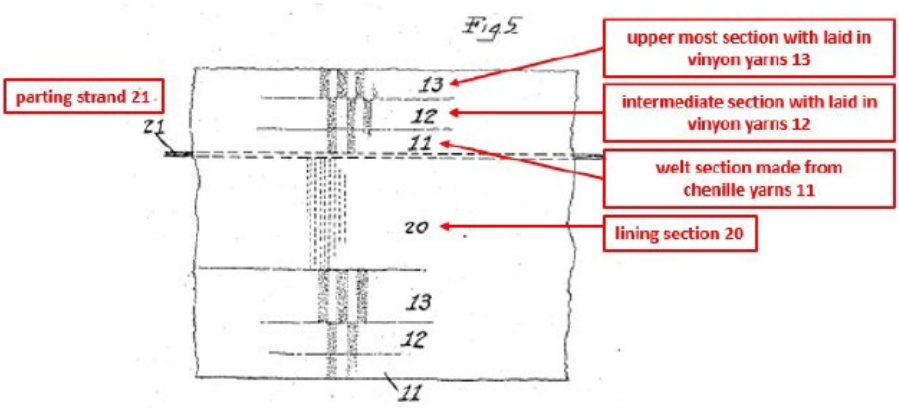

37. It is not apparent whether New Balance or Dr. Brookstein allege that the "portion of the material that becomes the upper" is Clark's "strip 11–12–13" alone or strip 11–12–13 in combination with lining section 20. But in either case, Clark fails to disclose knitting either with a *surrounding* textile structure. This is because the portion to be lasted is separated at parting strand 21 along only one or, at most, two sides. *See* Ex. 1004 at 4:39–43, Fig. 5. In my opinion, the vertical edges of the portion to be lasted are not removed from any material. Clark never discloses removing these edges from other textile material, and instead discloses that these edges are joined together without any post-processing steps. For example, Clark discloses that the portion that becomes the upper is "made of sufficient length to form an endless band which may be worked over the last so as to embrace it longitudinally when the two ends of the band are joined." Ex. 1004 at 3:55–59. Clark also discloses that it "may be assumed [] that the two ends of the strip 11–12–13 are united by stitching or binding corresponding to the back seam usually found in uppers." *Id.* at 3:63–66. Dr. Brookstein seems to agree. *See* Ex. 1003 at ¶128.

38. New Balance and Dr. Brookstein also contend that once Clark's portion that becomes the upper is separated from the fabric along the parting strand, lasted, and heat treated, the "exposed edges" of the upper are further trimmed to finish the upper. Petition at 21; Ex. 1003 at ¶128. Dr. Brookstein additionally opines that "[i]n this trimming process, only potions [sic] of the material at the bottom of the shoe,

and potentially at the top of the shoe, would have exposed edges that could be trimmed." Ex. 1003 at ¶128. First, Dr. Brookstein's opinion that multiple "exposed edges" of Clark's knitted band would be trimmed is unsupported by Clark. Clark discloses only that "the exposed edge," singular, may be trimmed if desired. Ex. 1004 at 4:61–66. In my opinion, Clark refers to the top edge of portion 13. That is the only edge that is exposed. *See id.* at Figs. 2, 3. Clark discloses that the bottom edge of section 11 is lasted together across the bottom of the last and eventually is attached to a shoe bottom. Ex. 1004 at 3:9–10, 71–74. Second, even if the top edge is trimmed, Clark's upper still isn't knitted with or removed from a *surrounding* textile structure. At least two of four edges of strip 11–12–13 would remain intact. And in my opinion, a POSITA reading the '749 patent in 2004 would not have understood a lengthwise strip knitted in a larger rectangular fabric to have been knitted with a *surrounding* textile structure.

39. For at least these reasons, it is my opinion that Clark fails to disclose this limitation.

B. Clark does not disclose "removing" the "textile element" from the "surrounding textile structure," as recited in claims 1 and 13

40. In my opinion, Clark does not disclose "removing" the "textile element" from a "surrounding textile structure," as recited in claims 1 and 13. Because Clark fails to disclose knitting a textile element with a *surrounding* textile

structure (*see supra*, §X.A), it also does not disclose removing the textile element from surrounding textile structure.

41. For at least this reason, it is my opinion that Clark fails to disclose this limitation.

XI. GROUND 5: MILLS FAILS TO DISCLOSE CLAIMS 1–8, 11, 13–18, and 21

42. In my opinion, Mills fails to disclose all of the features of independent claims 1 and 13. Thus, Mills fails to disclose any challenged claim in Ground 5.

A. Mills does not disclose manufacturing "an article of footwear," as recited in the preamble of claims 1 and 13

43. In my opinion, Mills does not disclose manufacturing "an article of footwear," as disclosed in the preambles of claims 1 and 13. As I discuss above in Section VIII, it is my opinion that an "article of footwear" does not include hosiery, stockings, socks, or the like. Mills discloses a method of manufacturing a stocking. Therefore, in my opinion, Mills fails to disclose the preamble of claims 1 and 13.

B. Mills does not disclose a "knitted textile structure" that "surrounds" the textile element(s), as recited in claims 1 and 13

44. Each of independent claims 1 and 13 recite that the knitted "textile element" is surrounded by a "knitted textile structure." In my opinion, Mills does not disclose this feature. New Balance and Dr. Brookstein contend that Mills' stocking blank is knit with a surrounding textile structure, labeled as *a* and *k* in Figure 2. Petition at 46; Ex. 1003 at ¶202.

Fig. 2.

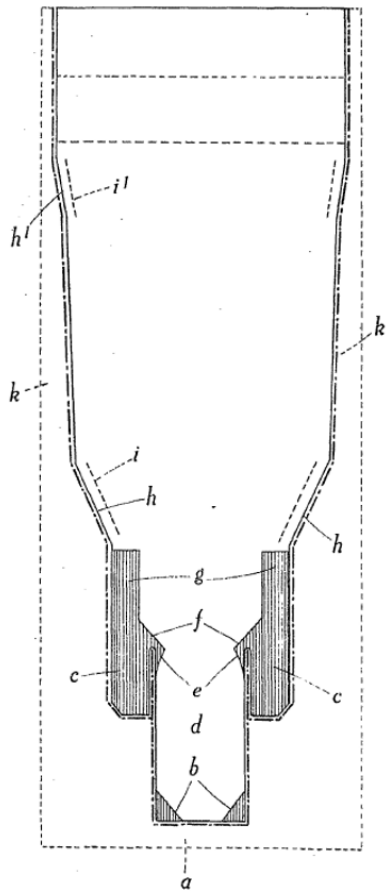

45. Mills discloses that waste portion *a*, although knitted, constitutes only a "small parallel portion" of "approximately one inch." *Id.* at 7:35–38. In my opinion, waste portion *a*, which abuts Mills' blank only on its tip, does not "surround" the blank. As shown in Figure 2, waste area *k* forms the large majority of the material around Mills' blank. Mills explicitly describes that portion *k* is not knitted. With respect to portion *k*, Mills discloses that the "waste" portions of the fabric "float over the requisite number of needles, ***instead of being knitted*** thereby to produce this waste portion." Ex. 1007 at 3:64–76 (emphasis added); *see also id.*

at 7:65–75 ("the waste portion composed of float threads and indicated at *k* is cut away"). In my experience, when Mills says "float threads," it refers to linear threads extending from edge-to-edge of the knitted blank. I've annotated Mills' Figure 2 to show this phenomenon below.

Fig. 2.

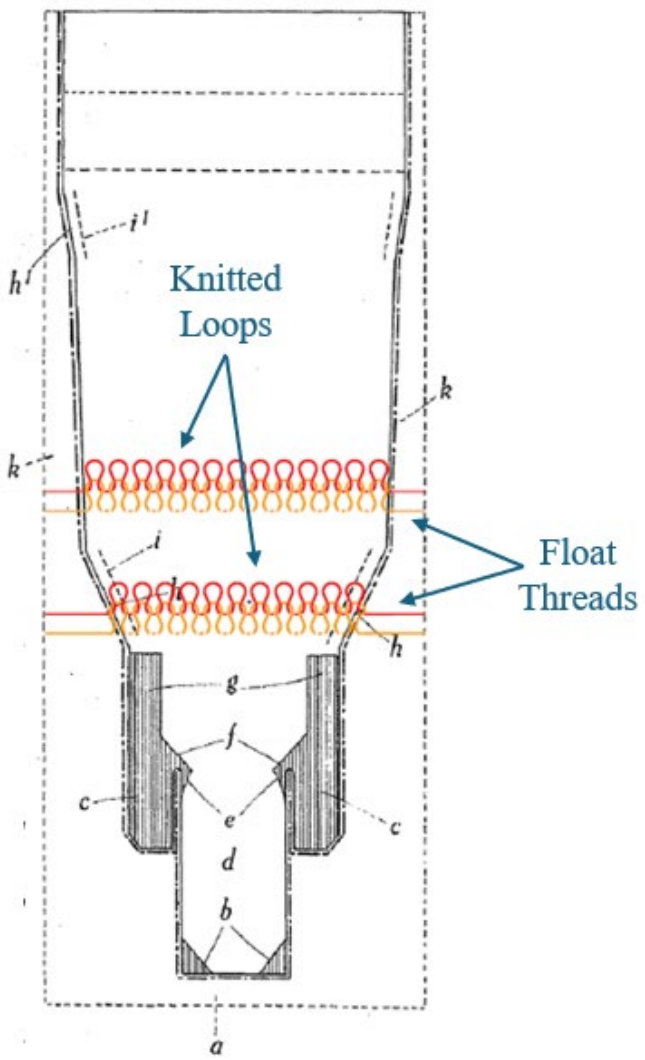

46. Float threads aren't "knitted" because they lack loops. In my opinion and experience, knitting requires the formation of loops. *E.g.*, Ex. 1001 at 2:53–56.

47. Because Mills' waste portion *k* is not knitted, and because waste portion *a* does not surround Mills' blank, in my opinion, Mills fails to disclose this limitation.

C. Mills does not disclose "incorporating the knitted textile element into the article of footwear," as recited in claims 1 and 13

48. In my opinion, Mills does not disclose "incorporating the knitted textile element into the article of footwear," as recited in claim 1. Mills also fails to disclose a substantially similar limitation recited in independent claim 13.[1] As I discussed above in Section XI.A, Mills does not disclose manufacturing an "article of footwear." For that reason alone, Mills fails to disclose this limitation.

49. Additionally, in my opinion, neither New Balance nor Dr. Brookstein explains how Mills incorporates its knitted blank into anything. Petition at 50; Ex. 1003 at ¶212.

50. For these reasons, it is my opinion that Mills fails to disclose this limitation.

---

[1] Independent claims 13 recites "incorporating at least one of the first and second knitted textile elements into the article of footwear."

I hereby declare that all statements made herein of my own knowledge are true and that all statements made on information and belief are believed to be true; and that these statements were made with the knowledge that willful false statements and the like so made are punishable by fine or imprisonment, or both, under Section 1001 of Title 18 of the United States Code.

Dated: August 9, 2024

Christopher M. Pastore, Ph.D.

Exhibit A

Curriculum Vitae

Christopher M. Pastore

Professional Experience

2019-present	*Assistant Provost*, Faculty Development: Classroom Pedagogy and Nexus Learning *Professor,* Transdisciplinary Studies *Associate Director*, Institute for Smart and Healthy Cities Thomas Jefferson University, Philadelphia, PA
2012- 2019	*Professor,* Transdisciplinary Studies *Co-Director*, Engineering and Design Institute *Nexus Learning Advocate* Kanbar College of Design, Engineering, & Commerce Thomas Jefferson University/Philadelphia University, Philadelphia, PA
2018 - present	Associate Editor, *Journal of Engineered Fibers and Fabrics*
2017-present	*Honorary Research Professor*, Department of Clothing and Textiles, Durban University of Technology, Durban, South Africa
2017	*Visiting Research Scientist,* Institute of Technical Textiles, RWTH Aachen University, Aachen, Germany
2014	*Visiting Research Professor*, Oak Ridge National Laboratory, Oak Ridge, TN
2003-2007	*Chief Science Officer,* Novacomp, Inc., Willow Grove, PA
2002–2012	*Professor*, Engineering *Co-Director*, Engineering and Design Institute, *Program Director*, Architectural Engineering *Secretary of the Faculty (2008-2009)* *Chair of the Faculty (2009-2010)* Kanbar College of Design, Engineering, and Commerce Philadelphia University, Philadelphia, PA
1995-2002	*Associate Professor* (tenured 2001), *Director of Research,* *Program Director:* Textile Engineering *Program Director:* Fibrous Materials Science, School of Textiles and Materials Technology, Philadelphia University/Philadelphia College of Textiles and Sciences, Philadelphia, PA

1995	*Visiting Research Professor*, Department of Textiles, University of Gent
1993-95	*Associate Professor*, (tenured, 1995) Department of Textile Engineering, Chemistry, and Science, North Carolina State University, Raleigh, NC.
1990-93	*Assistant Professor* , Department of Textile Engineering, Chemistry, and Science, North Carolina State University, Raleigh, NC.
1988-94	*Visiting Research Professor*, NASA Langley Research Center, Hampton, VA (Summers)
1988-90	*Assistant Professor*, Department of Materials Engineering, Drexel University, and *Associate Director*, Fibrous Materials Research Center, Drexel University, Philadelphia, PA.
1984-88	*Research Engineer*, Department of Materials Engineering, Drexel University, Philadelphia, PA.

Education

Ph.D.	Materials Science, Drexel University, Philadelphia, PA, March 1988; *A Processing Science Model for Three Dimensional Braiding*
M.S.	Mathematics, Drexel University, Philadelphia, PA, June 1986. Concentration: Computer Aided Geometric Design.
B.A.	Mathematics, LaSalle University, Philadelphia, PA, June 1982

Recognized Creative and Professional Achievement

Provost's Career Achievement Award, Thomas Jefferson University, 2024

Provost's Award for Applied Research, Thomas Jefferson University, 2022

Marion Roadhouse Nexus Learning Award, Thomas Jefferson University, 2021.

Member, Scientific Committee, *International Conference on Technics, Technology, and Education (ICTTE 2020)*, Yambol, Bulgaria, Nov 4-6, 2020.

National Academy of Inventors, member (Thomas Jefferson University Chapter), 2018

Honorary Research Professor, Faculty of Applied Sciences, Durban University of Technology, Durban, South Africa, 2017 - present

Journal of Engineered Fibers and Fabrics, Associate Editor, SAGE, 2017 - present

Fulbright Specialist, Textile Engineering, 2017-2020

Dr. Jackie Rehkopf Best Paper Award, "Light weighting Composites through Selective Fiber Placement", C. Pastore, 2015 SPE Automotive Composites Conference and Exhibition, Sept. 2015.

President's Award for Excellence, Philadelphia University, 2014.

Citation for Distinction, National Institute of Building Sciences, for the MS Sustainable Design, February 2012,

Best Practices in Communication – Honorable Mention, (for EcoMan and The Skeptic podcast), Council for the Advancement and Support of Education, December 2009.

Excellence in Education Award, (for MS in Sustainable Design Program) United States Green Building Council, 2009

Excellence in Sustainability Education, Delaware Valley Green Building Council, 2007

Philadelphia Sustainability Award, Pennsylvania Environmental Council, 2007

Leadership in Sustainable Building, Pennsylvania Resources Council, 2004

Director's Award, Systems Competency, National Textile Center, 2004

Best Presentation, National Textile Center, 2002, "Architectural Fabric Structures"

Distinguished Achievement in Basic or Applied Fiber Science, Fiber Society, 2000

Commendation from Philadelphia School District - Career to School program, advising high school students in engineering curricula, 1998

Outstanding Teacher of the Year, 1994, College of Textiles, North Carolina State University

Academy of Outstanding Teachers, North Carolina State University, 1994

Scholarly Activities

Books or In Books

Textile Structural Composites, C. Pastore, C. Ayranci, and F. Ko, DESTech, January 2023.

"Silicon Carbide Fibers", B. Mahltig, and C. Pastore in *Inorganic and Composite Fibers: production, properties, and applications*, editors B. Mahltig & Y. Kyosev, Woodhead Publishing, November 2018.

"Mineral and Ceramic Fibers", B. Mahltig, and C. Pastore in *Inorganic and Composite Fibers*, editors B. Mahltig & Y. Kyosev, Woodhead Publishing, November 2018.

Environmental Science: A Systems Thinking Approach (2nd ed.). C. Pastore and J. A. Klemens, Kendall Hunt Publishing Co. Ebook, 2018.

"4D-Textiles: Hybrid textile structures that change structural form with time", D. Schmelzeisen, H. Koch, and C. Pastore, Chapter 17, *Narrow Fabrics and Smart Textiles*, eds. Y. Kyosev, B. Mahltig, and A. Schwarz-Pfeiffer, Springer International Publishing, Berlin, Germany, 2018.

Handbook of Advances in Braided Composite Materials: Theory, Production, Testing and Application, C. Pastore, et al., Chapters 3, 4, 9, and 10, J. Carey, editor. Woodhead Publishing, October 2016.

Environmental Science: A Systems Thinking Approach, C. Pastore and J. Klemens, Kendall-Hunt, August 2015.

Sustainable Composites and Advanced Materials, C. Pastore and A. Netravli, eds., DESTech Publishers, April 2015.

"Harness Student Creativity and Expertise", J. Klemens, C. Pastore & M. Hudson, in *It Works For Me, Flipping the Classroom*, eds. C. Sweet, H. Blythe, and R. Carpenter, New Forums Press, Stillwater, OK, April 2015.

"Structure and Mechanics of 2D and 3D Textile Composites", *Structure and Mechanics of Fiber Assemblies*, ed. P. Schwartz, Woodhead Publishing, Cambridge, UK, October 2008.

"High-Tech Textiles", Encyclopedia of Clothing and Fashion, Charles Scribner, Michigan, October, 2004

Soft Computing in Textile Sciences, C. Pastore and L. Sztandera, eds., Springer-Verlag, Berlin, October, 2002.

Surface Characteristics of Fibers and Textiles, editor: C. Pastore & P. Kiekens, Marcel Dekker, Inc., NY, Dec. 2000

Technology Encyclopedia, editor of textile and apparel entries: C. Pastore, Brown Partworks, London, September, 2000

Mechanics of Textile and Laminated Composites with Applications to Structural Analysis and Design, C. Pastore and A. Bogdanovich, *Jun, 1996,* Chapmann and Hall, London.

Illustrated glossary of textile terms for composites. Christopher M. Pastore. NASA Contractor Report 191539, Hampton, VA, October 1993.

"Analysis of composite shallow shell structures reinforced with textiles." A. Bogdanovich, C. Pastore, and A. Birger. In P. Hamelin and G. Verchery, editors, Textile *Composites in Building Construction*, volume **2**, pages 35--44. Editions Pluralis, Paris, 1992.

"Mechanical properties of triaxially braided composites: Experimental and analytical results." John E. Masters, R. L. Foye, Christopher M. Pastore, and Yasser A. Gowayed. *Contract Report 189572*, NASA, January 1992.

"Design and fabrication of a composite monocoque bicycle frame." Christopher Pastore, Nick Casale, and Dan Bristow. In T. Vigo and A. Turbak, editors, *High Tech Fibrous Materials*, pages 90--101. American Chemical Society, March 1991.

"Applications of computer aided geometric modelling for textile structural composites." Christopher M. Pastore, Yasser A. Gowayed, and YunJia Cai. In C. Brebbia, W. de Wilde, and W. Blain, editors, *Computer Aided Design in Composite Material Technology*, pages 45--53. Computational Mechanics Publications, Southampton, UK, 1990.

Atkins and Pearce Handbook of Industrial Braiding, F. Ko, C. Pastore, and A. Head, Atkins and Pearce, Covington KY, October, 1989.

"CIM of braided preforms for composites." Christopher M. Pastore and Frank K. Ko. In C. A. Brebbia, W. P. deWilde, and W. R. Blain, editors, *Computer Aided Design in Composite Materials Technology*. Springer Verlag, 1990.

"A Comparison of the Japanese and American Primary Hand for Men's Winter Suiting Fabrics", F. Ko, C. Pastore and S. Kawabata, *Objective Measurement: Applications to Product Design and Process Control*, eds. S. Kawabata, R. Postle and M. Niwa, (TMSJ: Osaka, Japan, 1986), pp. 581-589.

PATENTS

Impact and Explosive Force Minimization Structures, US Patent #9,572,389, February 2017 (T. Twardowski, A. Faden, A. Ira, C. Pastore, T. Isaacson).

Impact and Explosive Force Minimization Structures, US Patent #9,462,847, October 2016 (T. Twardowski, A. Faden, A. Ira, C. Pastore, T. Isaacson).

Vandalism-resistant Insulating Panels for Building Exteriors and Building Having Vandalism-resistant Thermally Insulative Walls, US Patent #8,287,671, April 2009 (C. Pastore, R. Fleming and T. Twardowski)

Vandalism-resistant Insulating Panels for Building Exteriors and Building Having Vandalism-resistant Thermally Insulative Walls, US Patent #7,521,114, June 2006 (C. Pastore, R. Fleming and T. Twardowski)

A Method of making a three-dimensional stiffener having at least one wall extending outwardly from a generally planar base portion, Taiwan Patent #TW355696B (with A. Malek)

Automated Three-Dimensional Method for Making Integrally Stiffened Skin Panels, US Patent # 6,019,138, February 2000 (with A. Malek).

Games

Starchitect, Pastore, C. and Fleming, R. The Game Crafter, Madison, WI, to be released.

The Red Queen's Menagerie, Suss, J. and Pastore, C., The Game Crafter, Madison, WI, August 2016.

Refereed Publications

Shajoo, S., Schmellzeisen, D., and Pastore, C., "Auxetic structures from 3D printed hybrid textiles", *Communications in Development and Assembling of Textile Products,* August, 2021. https://doi.org/10.25367/cdatp.2021.2.p91-102

Pastore, C., Kyosev, Y., Fassihi, F. A. , and Flax, B., "Textile education during the 2020 pandemic: experiences in US, South Africa and Germany" *Communications in Development and Assembling of Textile Products*, May, 2021. https://doi.org/10.25367/cdatp.2021.2.p18-33

Narula, A., Pastore, C., Schmelzeisen, D., El Basri, S., and Schenk, J., "Effect of Knit Fabric Structure on Peel Strength of 3D Printed Textiles", *Journal of Textiles and Fibrous Materials, February 7, 2018,*. https://doi.org/10.1177/2515221117749251

Pastore, C. M., "Tailored Material Properties using Textile Composites", *IOP Conference Series: Materials Science and Engineering*, **254**, 4, 2017. (Refereed conference proceedings)

Shajoo, S., Haller, J., Pastore, C., Schmelzeisen, D., and Gries, T., "4D Textiles and Shape Memory Polymers", submitted to *Additive Manufacturing*.

Clements, B., Bushman, J, Murthy, S., Ezra, M., Pastore, C. and Kohn, J, "Design of Barrier Coatings on Kink-resistant Peripheral Nerve Conduits", *Journal of Tissue Engineering*, Vol 7, February, 2016.

C. Pastore, "Light weighting Composites through Selective Fiber Placement", *Proceedings of the 2015 SPE Automotive Composites Conference and Exhibition*, Detroit, MI, Sept. 2015. (refereed proceedings)

Periyaswamy, T., Balasubramanian, K., and Pastore C., "Novel characterization method for fibrous materials using non-contact acoustics: material properties revealed by ultrasonic perturbations", *Ultrasonics*, Vol 56, pp 361-369, February 2015.

Pastore C. and Garfinkle M., "The Expected Time to Attain Chemical Equilibrium from a Thermodynamic-Probabilistic Analysis", *Canadian Journal of Chemistry*, Vol 90, pp 243-255, March 2012.

Frostén, S., and Pastore, C., "Dancing Fabric: Micro-Tectonic Environmental Control System", *INPUT_OUTPUT: Adaptive Materials and Mediated Environments Symposium and Exhibition*, Temple University, Oct. 2010.

Pierce, J., Pastore, C., Reinbold, K., Lyngard, B., and Goldman, R., "Direct Measurement of Punch Force During Six Professional Boxing Matches" *Journal of Quantitative Analysis in Sports*, (**2**) April 2006. http://www.bepress.com/jqas/vol2/iss2/3

E. Shady, M. Abou-Iiana, S. Youssef, Y. Gowayed, and C. Pastore, "Detection and Classification of Defects in Knitted fabric structures", *Textile Research Journal*, June 2006.

Lyons, J. and Pastore C. M., "Effect of Braid Structure on Yarn Cross-Sectional Shape", *International Polymer Processing*, Vol. 5, No. 3, 182-186. 2004.

K. Hristov, E. Armstrong-Carroll, M. Dunn, C. Pastore, and Y. Gowayed, "Mechanical behavior of circular hybrid braids under tensile loads", *Textile Research Journal*, Vol. 74, No. 1, 2004.

M. Abou-Iiana, S. Youssef, C. Pastore, and Y. Gowayed, Y., "Assessing structural changes in knits during processing", *Textile Research Journal*, Vol. 73, No. 6, pp. 535-540, 2003.

C. Rusinko and C. Pastore, "Managing innovation to address financial challenges in the textile industry", *Journal of Textile and Apparel Technology and Management*, 3 (**2**), 2002 refereed web publication: https://textiles.ncsu.edu/tatm/wp-content/uploads/sites/4/2017/11/rusinko_fulldocument-1.pdf

A. Messinger, R. Fleming, C. Pastore, and C. Wollner, "Understanding it all: A New Approach to Investigating Fabric Structures, Part 2", *Fabric Architecture* Industrial Fabrics Association International, Roseville, MN (July/August 2002).

C. Dougherty, J. Pierce, B. George, E. Carroll, and C. Pastore, "Promoting Active Learning in Introductory Textile Classes: Assessing and Responding to Diverse Learning Styles," *2002 AAHE Assessment Conference, Assessment: A Shared Commitment*, Boston, June 2002

A. Messinger, R. Fleming, C. Pastore, and C. Wollner, "Understanding it all: A New Approach to Investigating Fabric Structures, Part 1", *Fabric Architecture,* Industrial Fabrics Association International, Roseville, MN (May/June 2002).

R. Fleming and C. Pastore, "Transcendent Sustainability: The Role of Aesthetics", *Proceedings of the 90th ACSA National Conference*. Washington D.C.: ACSA Press, April, 2002.

A. Messinger, R. Fleming, C. Pastore, and C. Wollner, "Search for a New Approach into the Investigation of Fabric Structures", *Proceedings of the 90th ACSA National Conference*, Washington D.C.: ACSA Press, April, 2002.

M. Govindaraj, C. M. Pastore, A. Raheja, & A. Kumar, "Haptic Simulation of Fabric Hand". *The Hand*, Volume 8, p. 01-08, 2001.

Christopher M. Pastore, "Opportunities and Challenges for Textile Reinforced Composites", *Mechanics of Composite Materials*, **12**-3, 2000.

Frank K. Ko and Christopher M. Pastore, "Virtual Manufacturing of Braided Composites", *Composites Tooling and Manufacturing*, SME, 2000.

Matthew Dunn and Christopher Pastore, "Determining Three Dimensional Weaving Design from Material Requirements", *Composites Manufacturing*, 1998.

Matthew Dunn, Christopher Pastore and Ania Saeys, "Yarn Compaction and Migration in Woven Composites", *Polymer and Polymer Composites*, **6**, 2, pp 89-96, 1998.

Alexander Bogdanovich and Christopher Pastore, "Material-smart Analysis of Textile Reinforced Structures," *Composites Science and Technology*, **56** (3): 291-309, (1996).

H. Davis, R. McGregor, C. Pastore, & N. Timble. "Human perception and fabric streakiness", *Textile Research Journal*, 66(8), p. 533-544, 1996.

Edward H. Glaessgen, Christopher M. Pastore, O. Hayden Griffin and Alexander B. Birger, "Geometrical and Finite Element Modeling of Textile Composites", *Composites: Part B,* **27B**: 43-50, 1996.

Yasser A. Gowayed, Christopher M. Pastore and Carl S. Howarth, "Modification and Application of a unit cell continuum model to predict the elastic properties of textile composites", *Composites: Part A,* **27A**: 149-155 (1996).

A. E. Bogdanovich, C. M. Pastore, and B. P. Deepak "A comparison of various 3-D approaches for the analysis of laminated composite structure." *Composites Engineering*, **5** (9):1105-1126, 1995.

Christopher M. Pastore and Yasser A. Gowayed. "A self-consistent fabric geometry model: Modification and application of a fabric geometry model to predict the elastic properties of textile composites." *Journal of Composites Technology and Research*, **16**:32--36, January 1994.

Ralph McGregor, Donald H. Mershon, and Christopher Pastore. "Perception, detection and diagnosis of appearance defects in fabrics." *Textile Research Journal*, **64** (10):584--591, 1994.

Christopher M. Pastore. "Quantification of processing artifacts in textile composites." *Composites Manufacturing*, **4** (4):87-112, 1993.

John E. Masters, R. L. Foye, Christopher M. Pastore, and Yasser A. Gowayed, "Mechanical properties of triaxially braided composites: Experimental and theoretical results." *Journal of Composites Technology and Research*, **15** (2):112--122, Summer 1993.

E. Skott Greenhalgh, Christopher M. Pastore, and Moishe Garfinkle. "Aeroelastic airfoil smart spar." *Composites Manufacturing,* **4** (4):194--206, 1993.

Christopher M. Pastore, Alexander E. Bogdanovich, and Yasser A. Gowayed. "Applications of a meso-volume based analysis for textile composite structures." *Composites Engineering*, **3** (2):181--194, 1993.

Yasser A. Gowayed and Christopher M. Pastore. "Analytical techniques for the prediction of elastic properties of textile reinforced composites." *Mechanics of Composite Materials*, **5**:579--596, Dec 1993.

E. Skott Greenhalgh, Christopher M. Pastore, and Moishe Garfinkle. "A continuous fiber composite wing box-beam exhibiting twist-bend coupling." *Composites Engineering*, **3** (7-8):691--698, 1993.

Y. A. Gowayed and C. M. Pastore. "An integrated approach to the mechanical and geometrical modelling of textile reinforced composites." In *Fall Annual Meeting*, Boston, MA, December 1992. Materials Research Society, MRS.

Yu. Dzenis, A. Bogdanovich, and C. Pastore. "Stochastic damage evolution in textile laminates." *Composite Manufacturing*, **4** (4):187--193, 1992.

C. M. Pastore, A. E. Bogdanovich, and J. E. Masters. "The effects of specimen width on tensile properties of braided laminates." In *3rd Advanced Composites Technology Symposium*, Long Beach, CA, June 1992. NASA/DoD.

Ralph McGregor, Don Mershon, and Christopher Pastore. "Perception, detection and diagnosis of appearance defects in fabrics." In A. Zucker, editor, National *Laboratory Technology Transfer*, pages 13--91, ASME Publications, November 1992.

C. M. Pastore. "Quantification of processing artifacts in textile composites." In *Fiber Tex '92*, Philadelphia, PA, October 1992. NASA Langley Research Center.

"Mechanical Properties of Triaxially Braided Composites: Experimental and Analytical Results", J.E. Masters, R.L. Foye, C.M. Pastore, and Y.A. Gowayed, *NASA Contractor Report 189572*, NASA Langley Research Center, Jan. 1992.

T. Tan, C. Pastore, and F. Ko. "Engineering design of tough ceramic matrix composites for turbine components." *Journal of Engineering for Gas Turbines and Power*, 113(2):312--317, April 1991.

John E. Masters, R. L. Foye, Christopher M. Pastore, and Yasser A. Gowayed. "Mechanical properties of triaxially braided composites: Experimental and theoretical results." In *Proceedings of the NASA/DOD Advanced Composites Technology Conference*, pages 34--41, Hampton, VA, Nov. 1991. NASA/DOD, NASA.

Yasser. A. Gowayed and Christopher M. Pastore. "Analytical techniques for textile structural composites: A comparative study of US-USSR research." In Proceedings of *FIBER-TEX 90*. NASA, 1990. CP 3128.

Frank K. Ko and Christopher M. Pastore. "Modelling of textile structural composites: Part I: Processing science model for three dimensional braiding." *Journal of the Textile Institute*, 81(4), 1990.

Frank K. Ko and Christopher M. Pastore. *Structure and properties of an Integrated 3-D fabric for structural composites*. ASTM STP 1874. ASTM, 1990.

Christopher M. Pastore and Frank K. Ko, "Near Net Shape Manufacturing of Composite Engine Components by 3-D Fiber Architecture", Transactions of the ASME, 89-GT-315, *Gas Turbine and Aeroengine Congress*, June 1989, ASME, NY, NY.

Frank K. Ko and Christopher M. Pastore. "Design of complex shaped structures." In *Textiles: Product Design and Marketing*, pages 123--135. The Textile Institute, The Textile Institute, May 1987.

Christopher M. Pastore, Dennis W. Whyte, H. Benny Soebroto, and Frank K. Ko. "Design and analysis of multi-axial warp knit fabrics for composites." *Journal of Industrial Fabrics*, 5(1):84--91, September 1986.

P. Fang, F. Ko, C. Pastore and M. Koczak, *Stress/strain/time relationship of silicon carbide yarns*, Drexel Press, Philadelphia, PA 1986.

Frank K. Ko, Ping Fang, and Christopher M. Pastore, "Multilayer Multidirectional Warp Knit Fabrics for Industrial Applications" *Journal of Industrial Fabrics,* 4(2):73--85, December 1985.

F. Ko and C. Pastore, "Development of Multi-bar Weft Insertion Warp Knit Fabrics for Industrial Applications", *Journal of Engineering for Industry,* Vol 11, 1980.

Presentations and Non-Refereed Publications

"Using System Dynamics Modelling for Sustainable Apparel Production", G. Kaur & C. Pastore, The Fiber Society Spring Annual Meeting, Greensboro, NC, May 2024.

"Impact of Consumer Awareness on Fast Fashion", G. Kaur & C. Pastore, *The Fiber Society's Fall 2023 Technical Meeting and Conference*, Philadelphia, PA, Oct 25-27, 2023.

"Designing 3D Braided Composites", T. Liao, C. Pastore, H. Lam, M. Grudza, & B. Ong, *The Fiber Society's Fall 2023 Technical Meeting and Conference*, Philadelphia, PA, Oct 25-27, 2023.

"Learning from Covid-19: How the pandemic led to improved digital and remote learning in textile engineering", C. Pastore, *Co-Creating the future in education and the textile industry, 4th T-CREPE Workshop,* Tourcoing, France, March 15-16, 2023.

"Imagineering at Thomas Jefferson University", C. Pastore, *Alumni Day at Disney 100*, Franklin Institute, Philadelphia, March 11, 2023.

"How to Host an Inter-professional Academic Book Club", D. Verbit and C. Pastore, *Innovative Strategies to Advance Student Learning*, ITLC Lilly, Asheville, NC, Aug 8-10, 2022.

"Finding Joy in Game Design", C. Pastore and J. Suss, *Faculty Day 2022*, Thomas Jefferson University, June 2022.

"Talking Teaching", C. Pastore, *Faculty Day 2022*, Thomas Jefferson University, June 2022.

"Development of a 3D Braided Preform for Rotorcraft flex beams", C. Pastore, D. Nguyen, T. Chen, S. Ng, B. Ong, H. Lam, M. Grudza, D. Jann, R. Ciccarelli, and T. Liao, *Vertical Flight Society Forum 78*, Fort Worth, TX, May 10-12, 2022.

"Characterization of Residual Monomer in Acrylic Emulsion Medical Adhesives", M. Ugwuanyi, C. Pastore, & T. Twardowski Jr, Thomas Jefferson University College of Health Sciences Student Poster Session. Thomas Jefferson University. April, 2021.

"Introduction to 4D Textiles", C. Pastore, *AATCC Workshop*, online, March 5, 2021

"Textile education during the 2020 pandemic: experiences in US, South Africa and Germany", Fassihi, A., Flax, B., Kyosev, Y., and Pastore, C., refereed proceedings of *International Conference on Technics, Technology and Education*, Yambol, Bulgaria, Nov 4-6, 2020.

"Assessment of Biodegradable Weed Control Fabrics Made of Flax and Polylactic Acid Fibers", W. Chanprapanon, B. George, & C. Pastore, *PaperCon 2019*, TAPPI, Indianapolis, IN, May 5-8, 2019.

"Shape Memory Polymers for Recovery of 4D Textiles", C. Pastore, Keynote Speaker, *Aegean Textile Conference,* Mytilene, Greece, Sept 4-7, 2018.

"4D Textiles and Shape Memory Polymers", C. Pastore, D. Schmelzeisen, S. Shajoo, and J. Hairer, *Kármán Conference: Additive Fabrication of Interactive Material Systems,* Bergisch Gladbach, Germany, July 15-18, 2018.

"Game-Based Learning to Enhance Student Engagement", J. Suss, C. Pastore, R. Fleming & D. Orsetti, *Faculty Days*, Thomas Jefferson University, June 5, 2018, Philadelphia, PA.

"4D Textiles: Defined shape-change through 3D printed hybrid textiles", D. Schmelzeisen, C. Pastore, J. Haller, and T. Gries, *Fiber Society Annual Meeting 2017,* November, Athens, GA.

"Advances in Technical Textiles", *Dean's Lecture Series,* Durban University of Technology, Durban, South Africa, 20 September, 2017.

"Use of Elastomers and Bingham Plastics for Energy Absorption", *Plastics Institute of Southern Africa,* invited lecture, Durban, South Africa, 19 September, 2017.

"Implications of Industry 4.0 to the Textile Industry", C. Pastore, *Textile Industry Symposium*, US Consulate, Durban, South Africa, 12 September, 2017.

"Optimization of Textile Composites", C. Pastore, *4D Textile Workshop*, RWTH Aachen University, Institute of Textile Technology, Aachen, Germany, July 27 ,2017.

"Tailored Materials Properties using Textile Composites", C. Pastore, *AUTEX 2017*, Corfu, Greece, 29 May, 2017.

"Reinforced Bingham plastics for energy dissipation", C. Pastore and T. Twardowski, *AATCC International Conference*, Williamsburg, VA, April 2016.

"The importance of game play in engaging students in serious gaming", C. Pastore and J. Suss, *3rd Annual Lilly Conference - Austin*, Austin, TX, January 2016.

"Lightweighting Composites through Selective Fiber Placement", C. Pastore, 2015 SPE Automotive Composites Conference and Exhibition, Detroit, MI, Sept. 2015.

"Integrating Building Automation into Academic Programs", R. Waligora & C. Pastore, *Honeywell Users Group*, Scottsdale, AZ, June, 2015.

"Transportation Applications of Textile Composites", session chair, C. Pastore, *TexComp 12*, Raleigh, NC, May 2015.

"Optimizing Price-Performance of Hybrid Short Fiber Composites", C. Pastore, R. Norris, C. Eberle, D. Hartman, and T. Sudbury, Keynote Presentation, *TexComp 12*, Raleigh, NC, May 2015.

Multi-material Preforming of Structural Composites, R. E. Norris, C. C. Eberle, C. Pastore, T. Z. Sudbury, F. Xiong, D. Hartman, ORNL/TM-2015/174, CRADA/NFE-14-04920, ORNL, Oak Ridge, TN, April 2015.

"Initial Lessons from Nexus Learning for Engineering Students Achieved Via Interdisciplinary Projects for Outside Clients," M. J. Traum, C. F. Anderson, C. M. Pastore, and M. J. Leonard, *Proceedings of the Spring 2015 Mid-Atlantic ASEE Conference*, Villanova, PA, April 10-11, 2015.

"Architectural and Transportation Applications of Fibrous Materials", session chair: C. Pastore, *Fiber Society Annual Meeting*, Philadelphia, PA, October 2014.

'Microtectonic Responsive Textile Systems", S. Frostén and C. Pastore, *Fiber Society 2014 Fall Meeting and Technical Conference: Fibers for the Future, Philadelphia, PA,* October 2014.

"Multimaterial Preforming of Structural Composites", Pastore, C., Sudbury, T., Norris, R., Eberle, C., Hartman, D. and Anderson, C., *Fiber Society 2014 Fall Meeting and Technical Conference: Fibers for the Future, Philadelphia, PA,* October 2014.

"Multimaterial Preforming of Structural Composites", T. Sudbury and C. Pastore, *National Conference on Undergraduate Research,* Lexington, KY, April 2014.

"High Tenacity Polyester Yarns: the New Generation of High Performance Biomaterial", M. King, C. Pastore, and R. Torgeson, *Pioneering the Future of Biomaterials*, Society for Biomaterials 2014 Annual Meeting, Denver, CO, April 2014.

"Noncontact Ultrasonic Characterization Techniques for Fibrous Materials Analysis", Periyaswamy, T., Balasubramanian, K., and Pastore, C. *Fiber Society 2012 Spring Conference*, St. Gallen, Switzerland, May 2012.

"The Sustainable Home: Today and Tomorrow", C. Pastore, *Eco-Expo 2012*, guest speaker, Ambler, PA, Jan 2012

"Future of Green Technologies", C. Pastore Panel Leader*, Green Building Product Summit*, Pittsburgh, PA, June 2011

"The Art and Science of Glass-making", C. Pastore, *Philadelphia Science Festival*, Philadelphia, PA, April 2011

"Green Plastics", C. Pastore, *SPE Plastic Magic*, Philadelphia, PA April 2011

"Sustainability and BioPolymers", C. Pastore, *ANTEC 2010,* keynote presentation, Orlando, FL, May 2010.

"Sustainability and Developments in Metallurgy", *Emerging Technologies Seminar*, Carpenter Technologies, April 2010.

"EcoMan and The Skeptic", *Earth Day Festival,* Cheltenham Township, April 2010.

"Here Comes the Sun", C. Pastore and R. Thompson, *Electrical and Computer Engineering Day*, Villanova University, November, 2009.

"Recent Advances in Green Materials", C. Pastore, session developer and chair, *Build Green 2009*, Philadelphia, PA, October 2009.

"Biobased Polymers for Structural Composites", C. Pastore and Y. Rane, *Society of Plastics Engineers Technical Symposium*, Newark, DE, October 2009.

"Rapidly Renewable Structural Composites", Y. Rane and C. Pastore, *International SAMPE Symposium and Exhibition (Proceedings)*, Baltimore, MD, May 2009.

"Green Materials for Brownfield Reclamation", C. Pastore, *Greening the Post-Industrial City: Innovative Reuse of Philadelphia's Idle Lands*, Philadelphia, PA April 2009.

"Commercialization of Green Products", C. Pastore, *Pa Green Growth Forum*, Hershey, PA September 2008

"Chitosan based renewable composites", Y. Rane and C. Pastore, *PA Green Growth Forum*, Hershey, PA September 2008.

"Trade Study of an Interface for a Removable/Replaceable Thermal Micrometeoroid Garment", Janet Ferl, Linda Hewes, Bobby Jones, Lindsay Aitchison, Ed Hodgson, Christopher Pastore, Bryce Beamer, and Frank Sneeringer, *International Conference on Environmental Systems,* June, 2008.

"Sustainable Textiles", C. Pastore, *Reading Public Museum*, Reading, PA, 2008.

"Chitosan Composites", Y. Rane and C. Pastore, PaGGP Forum, Harrisburg, PA September, 2007

"Development of Interdisciplinary Research Centers", *AICUP Conference*, July, 2007, Harrisburg, PA.

"Green Composites", C. Pastore and C. Schauer, *Innovations in Nanotechnologies, Composites, and Sports/Military Materials Symposium, AATCC,* Atlanta, GA, April 2007.

"Creative Design of Urban Spaces", Panelist, *Global Creative Economy Convergence Summit*, Philadelphia, PA June 14, 2006

"Opportunities for Textiles and Sustainability", C. Pastore, *TechTextil North America*, Atlanta, GA, March 2006

"Direct measurement of punch force during two professional boxing matches ", Pierce, Jr., J.D., Reinbold, K.A., Goldman, R.J., Lyngard, B.C., and Pastore, C.M. (2004), May meeting of the American Psychological Society, Chicago, IL.

"Sustainability and Composites", C. Pastore, *TechTextil North America*, Atlanta, GA, March 2004.

"Structural Composites from Harvest Waste", C. Pastore, invited speaker, Cornell University, Ithaca, NY, October, 2003.

"Industrial Applications of 3D Textiles", C. Pastore, keynote speaker, *Textile Engineering at the dawn of a new millennium*, Bruges, Belgium, April 2002.

"Critiquing, Clarifying, Rewriting and Expanding Current Definitions of Sustainability to Include Aesthetics as a Core Value of Sustainable Design", R. Fleming and C. Pastore, *90th ACSA Annual Meeting*, New Orleans, April, 2002.

"Renewable Nonwoven Composites for a Sustainable Future", Matthew W. Dunn, Rob Fleming, and Christopher M. Pastore, *INTC 2001*, Baltimore, MD, Oct. 2001.

"Textile Composites for High Temperature Applications", C. Pastore, invited lecture, NASA Glenn Research Center, July, 2001.

"Textile Composites: Barriers to Commercial Acceptance", C. Pastore, keynote address,, *The Fiber Society Fall 2000 Annual Technical Conference*, Nov. 7-10, 2000, Pine Mountain, GA.

"The performance of hybrid braided composite rebar", C. Pastore, E. Armstrong-Carroll and F. Ko, 32nd International SAMPE Technical Conference, Boston, MA, Nov 2000.

"Modelling the Tensile Response of Composite Rebar", E. Armstrong-Carroll, M. Dunn and C. Pastore, International Mechanical Engineering Congress and Exposition, ASME, Orlando, FL, Nov. 2000

"The Science of Art," C. Pastore and M. Dunn, special workshop for the *Franklin Institute Discovery Science Camp*, August 2000

"Opportunities and Challenges for Textile Composites", C. Pastore, invited keynote speaker, *MCM 2000 (11th International Conference on Mechanics of Composite Materials*), June 11-15, 2000, Riga, Latvia.

"Virtual Manufacturing of Braided Composites", F. Ko and C. Pastore, *Composites Manufacturing and Tooling, 2000*, Long Beach, CA, February 23, 2000,

"3D Weaving Technologies", C. Pastore, *Carbon Fibers '99*, Nov, 1999, San Diego

"Dynamic Mechanical Response of Woven Fabrics", C. Pastore, Invited Seminar Speaker, *15th AIAA Aerodynamic Decelerator Systems Conference*, Toulouse, France, June 1999.

"Property-Driven Three-Dimensional Weave Design," M. Dunn and C. Pastore, *International Conference on Composites Engineering V*, Las Vegas, NV, July 1998.

3-D Weaving for Composites, C. Pastore, workshop for SME Composites '97, Anaheim, CA 1997.

"The Role of Fiber Architecture in the Air Flow Resistance and Permeability of Renitent Textile Composites," M. W. Dunn and C. Pastore, *Fall General Meeting of the Fiber Society*, Newport, RI, October, 1996.

"Nonlinear impact response of textile reinforced composites.", C. Pastore, *Joint Air Force/Army Workshop on Structural Mechanics*, 22-25 September, 1997, Myrtle Beach, SC.

"Renitent Composites from Commingled Yarns," M. W. Dunn and C. Pastore, 42nd International SAMPE Symposium and Exhibition, May 1997, Anaheim, CA.

"Elastic Properties of Three-Dimensionally Woven Composites," M. W. Dunn, C. Pastore, and A. Saeys, *Advances in Fibre and Textile Science and Technologies*, Fiber Society International Meeting, April 1997, Mulhouse, France.

"Property-Driven Three-Dimensional Weave Design," M. Dunn and C. Pastore, *ICCE-V*, July 1998, Las Vegas, NV.

Geometrical Modeling of Textiles for Composites, C. Pastore and Y. Gowayed, Fiber Society Fall Meeting, Nov. 11-13, 1995, Philadelphia, PA (International meeting)

Drapability Evaluation of Woven Glass Fabrics, P. Kiekens, C. Pastore, and L. Vangheluwe, Fiber Society Fall Meeting, Nov. 11-13, 1995, Philadelphia, PA (International meeting)

Applications of Textile Composites - Problems and Pitfalls, C. Pastore, University of Gent, "New Products, Processes, and Applications of Textiles", July 12, 1995, Gent, Belgium. (International meeting)

"Glass-Thermoplastic Composite Building Materials From Reclaimed Waste Fibers", P. Duke and C. Pastore, *Proceedings, Tech-Textil* 1994, Frankfurt.

"Composite Panels from Reclaimed Textile Waste", C. Pastore, A. Morales and E. Skott Greenhalgh, Proceedings, *TAPPI Conference, 1995, March, 1995, Petersburg, FL.*

"3-D Stress Analysis in Textile Composite Plates Using a Combination of ANSYS and Sub-Element/Deficient Approximation Function Analysis", C. M. Pastore, A. E. Bogdanovich, V. Kumar, M. German, 10th Annual ASM/ESD, Detroit, MI, Nov. 1994.

"Effects of Heterogeneity Hierarchy on the Mechanical Response of Three Dimensional Woven Composites", A. E. Bogdanovich, C. M. Pastore, V. Kumar and M. German, Winter Annual Meeting of the ASME, Chicago, IL, Nov, 1994.

"Application of the Meso-Volume Concept to the Prediction of Elastic Properties of Rigid Textile Structures", C. M. Pastore, Fall General Meeting of the Fiber Society, Atlanta, GA, Nov. 1994.

"3-D Stress Analysis in Composite Plates Using a Combination of ANSYS and Sub-Element Deficient Approximation Function Analysis", C. M. Pastore, A. E. Bogdanovich, V. Kumar, M. German, American Society for Composites Annual Meeting, Newark, DE, Sept. 20-22, 1994.

"Three Dimensional Static Analysis of Laminated Composite Cylinders", A. E. Bogdanovich and C. M. Pastore, Annual Meeting of the American Society for Composites, Newark, DE, Sept. 1994.

"Modelling of Textile Composites", E. Glaessgen, C. Pastore, H. Griffin, A. Birger, First Annual ICCE, New Orleans, LA, Aug 29-31, 1994.

"Material Characterization of Textile Composites", C. M. Pastore and A. E. Bogdanovich, First Annual ICCE, New Orleans, LA, Aug 29-31, 1994.

"Glass-Thermoplastic Composite Building Materials From Reclaimed Waste Fiber", P.W. Duke and C. M. Pastore, Tech Textil, Hamburg, Germany, July 1994.

"Generalized Analysis of Nonuniform Inhomogeneous Structure", A. E. Bogdanovich and Christopher M. Pastore, Army Workshop on Impact of Composites, August, 1994.

"Critical Review of Materials Property Modelling for Textile Composites", C. M. Pastore, TexComp-2, Leuven, Belgium, May 17-19, 1994.

"Effects of Fiber Architecture on the Performance of Textile Composites", C. M. Pastore, Gordon Conference on Composites, January 10-14, 1994, Ventura, CA

"Elastic Properties of Triaxially Braided Glass/Urethane Composites", J. Jaranson, C. Pastore, J. Singletary, T. Kniveton, and H. Rushing, *Proceedings of the 9th Annual the Advanced Composites Conference and Exposition*: Technology Exchange and Partnerships, November 8-11, 1993, Dearborn, MI.

"Some Basic Concepts for the 3-D Analysis of Transverse and Interlaminar Stresses in Composite Structures", A. E. Bogdanovich and C. M. Pastore, *Proceedings of the 9th Annual the Advanced Composites Conference and Exposition*: Technology Exchange and Partnerships, November 8-11, 1993, Dearborn, MI.

"Role of Inhomogeneities in the Damage Resistance of Textile Composites", C. M. Pastore, *Proceedings of the 25th International SAMPE Technical Conference,* Oct. 26-28, 1993, Phila. PA.

"Analytical and Experimental Results for a Quasi-Unbalanced Composite Double Box Beam Spar", *Proceedings of the American Society for Composites 8th Technical Conference,* October 19-21, 1993, Cleveland, OH.

"Three-Dimensional Deformation and Failure Analysis of Textile Reinforced Composite Structures", A. E. Bogdanovich, C. M. Pastore and A. B. Birger, *Proceedings of the Ninth International Conference on Composite Materials (ICCM/9),* Madrid, 12-16 July, 1993,

"Neural Network Modelling of the Mechanical Behavior of Textile Composites", W. J. Jasper and C. M. Pastore, *1992 Fall Meeting of the Materials Research Society,* Nov. 30 - Dec. 4, 1992, Boston, MA.

"Geometrical and Mechanical Modelling of Textile Reinforced Composites", Y. A. Gowayed and C. M. Pastore, *1992 Fall Meeting of the Materials Research Society*, Nov. 30 - Dec. 4, 1992, Boston, MA.

"Symmetry Conditions in Textile Structures", E. Armstrong-Carrol C. M. Pastore, and F. Ko, *1992 Fall Meeting of the Materials Research Society*, Nov. 30 - Dec. 4, 1992, Boston, MA.

"Quantification of Processing Artifacts in Textile Composites", C. Pastore, *Fiber-Tex 1992*,Philadelphia, PA, October 27-29, 1992, NASA Conference Publication 3211, 1993,

"Perception, Detection and Diagnosis of Appearance Defects in Fabrics", R. McGregor, D. H. Mershon, and C. M. Pastore, *113th Winter Annual Meeting*, Anaheim, CA, Nov. 1992.

"Manufacture of an Aeroelastic Smart Spar", M. Garfinkle, E. S. Greenhalgh, and C. M. Pastore, *Fiber-Tex 1992*,Philadelphia, PA, October 27-29, 1992, NASA Conference Publication 3211, 1993,

"Stochastic Damage Evolution in Textile Laminates", Y. A. Dzenis, A. E. Bogdanovich and C. M. Pastore, *Fiber-Tex 1992*, Philadelphia, PA, October 27-29, 1992, NASA Conference Publication 3211, 1993, pp. 235-248.

"On The Structural Analysis of Textile Composites", A. Bogdanovich, and C. Pastore, *ASME Summer Annual Meeting on Materials and Structures*, Tempe, AZ, April, 1992.

"Analysis of Composite Shallow Shell Structures Reinforced with Textiles", A. Bogdanovich, C. Pastore, and A. Birger, *Textile Composites in Building Construction*, Lyon, France, June 1992.

"Aeroelastic Continuous Fiber Smart Spar", E. S. Greenhalgh, C. M. Pastore, and M. Garfinkle, American Society for Composites, *7th Technical Conference on Composite Materials*, Oct. 13-15, 1992, University Park, PA.

"Quantification of Processing Artifacts in Textile Composites", C. M. Pastore, *Fiber Tex '92*, Oct. 27-29, 1992, Phila., PA.

"The Effects of Specimen Width on Tensile Properties of Braided Laminates", C. M. Pastore, A. E. Bogdanovich, and J. E. Masters, *3rd Advanced Composites Technology Symposium*, Long Beach, CA, Jun 8-11, 1992.

"Applications of Structural Analysis to Textile Composites", C. Pastore, A. Bogdanovich, and Y.A. Gowayed, Proceedings, *5th Textile Structural Composites Symposium*, Phila., PA Dec. 2-5, 1991.

"Thermal and Thermo-mechanical Characterization of Three Dimensionally Reinforced Fibrous Composites", R. Gabel, A. Fahmy, and C. Pastore, *25th International SAMPE Technical Conference*, Tokyo, Japan, Nov. 1991.

"Modelling of Euclidean Braided Fiber Architectures to Optimize Composite Properties", E. Armstrong-Carroll, F. Ko, and C. Pastore, *Fiber-Tex 91*, Raleigh, NC Oct. 15-17, 1991, NASA CP-3176, pp. 153-157.

"Modelling Textile Composites: An Integrated Process, Property, Structure Approach", E. Greenhalgh, Y. Gowayed, and C. Pastore, *Fiber-Tex 91*, Raleigh, NC Oct. 15-17, 1991.

"Analytical Techniques for Textile Structural Composites: A Comparative Study of US-USSR Research", Y. Gowayed and C. Pastore, *FiberTex '90*, Aug. 14, 1990, Greenville SC

"Computer Aided Design of Three Dimensional Woven Fabrics for Composites", A. Morales, C. Pastore, *FiberTex '90*, Aug. 14, 1990, Greenville SC

"Effects of Processing on the Behavior of 3-D Braided SiC/SiC Composites", C. Pastore, P. Khandelwal, and F. Ko, Proceedings, *13th Annual Conference on Composites and Advanced Ceramic Materials,* Cocoa Beach, FL, Jan. 1989.

"Fabric Geometry and Finite Cell Models for Three Dimensional Composites", F. Ko and C. Pastore, *1st US/USSR Conference on Composite Materials*, Riga, USSR, May 20-25, 1989.

"Modelling of Three Dimensional Braided Carbon/Carbon Composites", C. Lei, F. Ko, and C. Pastore, *Proceedings, High Temperature Composites*, Dayton, OH, 1989.

"A Fabric Geometry Model for Brittle Matrix Composites", C. Pastore, E. Armstrong, and F. Ko, Proceedings, *Ceramic Matrix Composites*, Indianapolis, IN, April 24-26, 1989.

"Near Net Shape Manufacturing of Composite Engine Components by 3-D Architecture", C. Pastore and F. Ko, *Proceedings, Gas Turbine and Aeroengine Congress*, Toronto, Ontario, Canada, June 4-8, 1989.

"Evaluation of CVI Processing on SiC Yarns", C. Pastore, P. Khandelwal, and F. Ko, *Proceedings, 12th Annual Conference on Composites and Advanced Ceramic Materials*, Cocoa Beach, FL, Jan. 1988.

"CAD/CAM of Braided Preforms for Advanced Composites", G. Yang, C. Pastore, *Proceedings, 3rd Annual ASM/ESD Advanced Composites Conference*, Detroit, MI, Set 15-17, 1987.

"A Generalized Processing Science Model for Braided Structures", C. Pastore and F. Ko, *Fiber-Tex 1987*, NASA Publication

"Advanced Preforming Concepts for Structural Carbon/Carbon Composites", Proceedings, *12th Annual Conference on Composites and Advanced Ceramic Materials*, Cocoa Beach, FL, Jan. 1988.

"Structure and Properties of SiC/LAS III Ceramic Matrix Composites", F. Ko, P. Fang, and C . Pastore, *Proceedings, Whisker and Fiber Reinforced Ceramic Matrix Composites*, Oak Ridge National Laboratories, Oak Ridge, TN, May 1988.

"Analytical Techniques for Modelling Mechanical Properties of Multi-axial Textile Composites", C. Pastore, *Proceedings, 3rd Annual Textile Structural Composites Symposium*, Philadelphia, PA June 1-2, 1988.

"Structure and Properties of Hybrid SiC/LAS III Glass Ceramic Matrix Composites", C. Pastore, P. Fang, F. Ko and M. J. Koczak, *Proceedings, Fabricating Composites '88*, Philadelphia, PA, Sept. 1988.

"Structure and Properties of Hybrid SiC/Al-Li Composites", C. Lei, C. Pastore, and F. Ko, *Proceedings, Metal Matrix Composites, '88*, Philadelphia, PA, Sept. 1988.

"A Processing Science Model for Three Dimensional Braiding", C. Pastore and F. Ko, *Proceedings, Advanced Composites Conference,* 1988, Detroit, MI, Sept. 1988.

"An Integrated Design Methodology for Fabric Reinforced Composite Structural Components", T. M. Tan, C. Huang, C. Pastore and F. K. Ko, *Proceedings, ASME Winter Annual Meeting 1988*, Chicago, IL, Oct. 1988.

"Processing Science Model for Three Dimensional Braiding", C. Pastore and F. Ko, *Proceedings, ASME Winter Annual Meeting*, Chicago, IL, Oct. 1988.

"CAD of 3-D Composites", C. Pastore, Proceedings of the *2nd Textile Structural Composites Symposium,* Philadelphia, PA, Feb. 10-11, 1987.

"Structure and Properties of Cardable Glass Composites", F. Ko, M. Williams, C. Pastore, and J. Carey, *Proceedings, International Nonwovens Technical Conference, INDA Tec 87*, Hilton Head, SC, May 18-21, 1987.

"A Fabric Geometry Model for 3-D Braid Reinforced FP/Al-Li Composites", F. Ko, C. Pastore, C. Lei, and D. Whyte, *1987 International SAMPE Metals Conference: Competitive Advances in Metals/Metal Processing*, Cherry Hill, NJ, Aug. 18-21, 1987.

"Textiles: Product Design and Marketing", F. Ko and C. Pastore, *Proceedings, Annual World Conference of the Textile Institute*, Como Italy, May 5, 1987.

"The Effects of Fiber Architecture on SiC/SiC Composites", F. Ko, C. Burkland, C. Pastore, and M. Koczak, *Tenth Conference on Composites and Advanced Ceramic Materials*, Cocoa Beach, FL, Jan. 19-24, 1986.

"Control of Fiber Architecture for Tough, Net Shaped Structural Composites", F. Ko and C. Pastore, *Proceedings, Symposium on High Temperature Materials for the 1990's and Beyond*, Phila. PA, May 16, 1986.

"Cardable Glass Fibers for Composites", M. Williams, F. Ko, and C. Pastore, *Proceedings, IFAI Conference*, Boston MA, Oct. 1986.

"Tensile and Shear Properties of Composites by Various Reinforcement Concepts", A. Mayadas, C. Pastore and F. Ko, *Proceedings of the National SAMPE Technical Conference*, Anaheim, CA, 1985.

"Computer Aided Design of Nonwoven Fabrics", F. Ko and C. Pastore, *Proceedings of INDA Technical Symposium*, Boston MA, 1985.

"Design and Formation of 3-D Fabrics for Advanced Composites", Ko, F.K. and Pastore, C.M., *Composite Materials, NASA Publication CP-2420*, Annapolis, MD, November 1985

"Multilayer, Multidirectional Warp Knit for Industrial Applications", F. Ko, P. Fang, and C. Pastore, *Proceedings, IFAI Textile Technology Forum,* New Orleans, LA, Oct. 31, 1985.

"Nonlinear Viscoelasticity of Natural Polyamide Fibers", Ko, F.K. and Pastore, C.M., Proceedings, *7th International Wool Textile Research Conference*, Tokyo. 1985.

Role of Processing in the Performance of Textile Reinforced Composite Materials, C. Pastore, NCSU COT Graduate Seminar Series, Sept. 1992.

Use of Textile Composites in the Aerospace Industry, C. Pastore, Society for Plastic Engineers, Southern Pines, NC, April, 1992.

Design and Analysis of Three Dimensional Preforms for Composites, C. Pastore, SAMPE Long Island Division, March 14, 1989.

Manufacture, Design and Analysis of Braided Fabrics and Composites, C. Pastore, Proceedings, 4th Annual Textile Structural Composites Symposium, Philadelphia, PA July 24-26, 1989.

Model for Silk-Like Spun Bonded Fabrics, F. Ko, P. Fang, C Pastore, INDA-TEC: The International Nonwovens Technical Conference, Philadelphia, PA, 1988.

Courses Taught

Thomas Jefferson University

Advanced Textile Composites

Analytical Methods[S]

Architectural Engineering Senior Design

Behavior of Materials[A]

Chemical Protective Clothing[C]

Composite Materials: Design and Analysis

Design of Green Materials[A]

Eco-Innovation and Sustainability[S]

Engineering Dynamics

Engineering Senior Design I & II

Engineering Statics

Experimental Materials[A]

Experimental Structures[A]

Fabric Mechanics

Fabric Studies

Fibrous Composite Materials

Foundations: Fabric Studies

Integrative Design Process

Introduction to Computer Programming

Introduction to Structural Analysis

Introduction to Textile Materials[C]

Introductory Materials Science

Mechanics of Materials

Mechanics of Textiles

Numerical Methods

Probability and Statistics

Processing of Polymers and Fibers

Research Methods

Structural Design of Compressive Systems

Structural Design of Tensile Systems

Structures I [A]

Structures II[A]

Textile Engineering Senior Design I & II

Textile Materials

Textile Problem Solving

Yarn Mechanics

North Carolina State University

Design of a Composite Baja Vehicle

Introduction to Fiber Science

Introduction to Textiles

Mechanical Properties of Textiles

Physical Properties of Textile Fibers

Physical Properties of Textiles

Textile Composite Materials

Textile Composites

Textile Honors Seminar

Textile Materials Science Design I

Textile Materials Science Design II

Drexel University

Advanced Mechanical Behavior of Materials

Introduction to Materials Science

Numerical Methods for Materials Engineering

Senior Design Thesis

A: College of Architecture and the Built Environment

S: College of Science, Health and the Liberal Arts

C: School of Continuing and Professional Studies

Graduate Student Committees

Chair

T. Liao, *Three Braided Composites for Aerospace Applications*, PhD, Engineering, Thomas Jefferson University.

D. Forry, *Properties of knitted fabrics for garment modeling,* MS Textile Engineering, Thomas Jefferson University

C. Anderson, *Development of 3D Printed Gelatinous Composites*, PhD, Textile Engineering, May 2018, Thomas Jefferson University.

C. Huang, *Thermal Conductivity and Tensile Properties of Icelandic Horse Hair Fiber Reinforced Poly(Lactic Acid) Green Composites*, MS Textile Engineering, May 2012, Philadelphia University

J. Xu, *The Influence of Braid Angle and Yarn Twist Match on the Mechanical Properties and Knot Performance of Surgical Sutures*, MS Textile Engineering, May 2012, Philadelphia University

K. Fu, *Influence of Alkali Treatment on the Mechanical Properties of Aligned Jute Yarn/ PLA Composites*, MS Textile Engineering, May 2011, Philadelphia University

X. Qiu, *Acoustic Qualities of Natural Fiber Reinforced Polylactic Acid Composites* MS Textile Engineering, May 2011, Philadelphia University

R. Wu, *Characterization and Development of Flax/PLA Composites for acoustic properties*, MS Textile Engineering, December 2010, Philadelphia University

Y. Rane, *Development of Triggered Degradation for Chitosan Composites*, Ph.D., August 2009, Textile Engineering, Philadelphia University

M. Owens, *Organic Material for Bone Replacement,* MS December 2009, Textile Engineering, Philadelphia University

T. Periyaswamy, *Ultrasonic Characterization of Flexible Textile Materials*, Ph.D., March 2009, Textile Engineering, Philadelphia University

K. Darrah, *Luminous Fabric Structures*, M.S. May 2010, Textile Engineering, Philadelphia University

H. Khurana, *Effect of Processing on Mechanical and Physical Properties of Chemical Protective Clothing*, M.S., May 2006, Textile Engineering, Philadelphia University

A. Naik, *Ultra-light weight cement products for built environments*, M.S., May 2005, Textile Engineering, Philadelphia, University

S. Ram, *Highly extensible knit fabrics for architectural applications*, M.S., May 2004, Textile Design, Philadelphia University

C. Wollner, *Non-linear anisotropic fabrics for architectural structures*, M. S., May 2002, Textile Engineering, Philadelphia University

K. Hristov, *Tensile Characteristics of Hybrid Braided Structures*, M. S., May 2002, Textile Engineering, Philadelphia University

D. Lee, *Moisture Diffusion in Kevlar®-Epoxy Composites*, M.S. May 2000, Textile Engineering, Philadelphia University.

L. DellaPutta, *Dynamic Response of 3D Woven Tapes Subject to Axial Tensile Load,* M.S., August 1998, Textile Engineering, PCT&S

J. N. Singletary *Analysis of Transverse Compressive Response of Anisotropic Single Fibers*, Ph.D., June 1998, Fiber and Polymer Science, NCSU.

T. Chen, *Effect of Glass Fiber Surface Treatments on the Bonding of Glass Fiber in Resin Matrix Composites*, M. S. , May 1998, Textile Engineering, PCT&S

M. W. Dunn, *Renitent Textile Composites: Formation and permeability analysis of porous media*, M.S., May 1997, Textile Engineering, PCT&S.

A. B. Birger, *Development of Curvilinear Spline Aided Techniques for Structural Analysis of Textile Composites*, Ph.D., June 1997, Fiber and Polymer Science, NCSU.

B. Deepak, *Application of Parametric Splines in Curvilinear Coordinate Systems for the Structural Analysis of Inhomogeneous Materials*, Ph.D., June 1997, Fiber and Polymer Science, NCSU.

G. Loughry, *Analysis of Shear Testing Methods for Braided Composite Cylinders and Plates*, M.S., Dec. 1995, Textile Engineering and Science, NCSU.

S. Khedekar, *Modelling of Braided Composites with Architectural Defects*, M.S. Sep. 1995, Mechanical and Aerospace Engineering, NCSU.

C. G. Green, *Cost-Effective Textile Reinforcements for Complex Shaped Automotive Components*, M.S., Dec. 1995, Textile Engineering and Science, NCSU.

P. W. Duke, *Commingled Thermoplastic-Glass Composites Formed from Recyclable Carded Webs*, M.S., Dec. 1995, Textile Engineering and Science, NCSU.

B. Deepak, *Application of Parametric Splines to the Displacement Solution of Textile Composites*, M.S. March. 1995, Textile Engineering and Science and Mechanical and Aerospace Engineering Co-major, NCSU.

E. C. Clyburn, *Application of Neutron Tomography to the Investigation of Textile Reinforcement Geometry in Composites*, M.S., Feb. 1995, Materials Engineering, NCSU.

E. S. Greenhalgh, *Development of Biomimetic Prosthetic Heart Valve Leaflets*, Ph.D., Dec. 1994, Fiber and Polymer Science, NCSU.

Y. Gowayed, *An Integrated Approach to the Mechanical and Geometrical Modelling of Textile Structural Composites*, Ph.D. March 1992, Fiber and Polymer Science, NCSU.

E.S. Greenhalgh, *Fabric Geometry Modelling Applied to Finite Element Methodology for the Prediction of Mechanical Behavior of Cylindrical Composite Structures*, M.S., March 1992 Fiber and Polymer Science, NCSU.

Funded Research Activities

3D Braided rotorcraft components, Phase 2, STTR	Naval Air Warfare Center	2021-2023
3D Braided rotorcraft components, Phase 1 Option, STTR	Naval Air Warfare Center, Patuxent River	2020-2021
3D Braided rotorcraft components, Phase 1 STTR	Naval Air Warfare Center, Patuxent River	2019-2020
Development of a Medical Adhesive with Thermal Release Properties	Saligman Family Surgery Pilot Grant	2018
Effect of Temperature on Strength of Biocompatible Adhesives	Faculty Research Grant	2018
Game Based Learning	Nexus Research Grant	2017
Multi-material preforming of structural automotive composites	Oak Ridge National Laboratory	2013
Development of warp knitted heater panels for helicopter rotors	Cox & Co.	2012-2016
Optimization of braided sutures	Ethicon	2011-2013
Evaluation of energy efficient classrooms	CertainTeed	2011-2012
Development of Cellulose/PLA composites as hardwood replacement	DCED/Comins Guitars	2011
Life Cycle Assessment and Environmental Impact of Textile Products	Federal Mogul	2010-11
Development of braided nerve conduits	Rutgers Univ.	2010-13

Design of Sustainable Classroom Components	CertainTeed	2010
Development of new building products	CS Group	2008
Design of ergonomic, comfortable carriage vests	KDH, Inc.	2007-2009
Effectiveness of stretch fabric for enhanced athletic performance	Lontex, Inc.	2007-2008
Design and Characterization of transparent exterior building insulation materials	Roofscapes, Inc.	2007-2008
Residential Complex Design Charette	Earth Rising, Inc.	2007
Development of wheat gluten polymers	Green Materials R&D	2008
Evaluation of through thickness reinforcement of Carbon/Carbon Composites	MR&D	2007
Pa Green Growth Partnership	PA DCED	2006-2011
Consortium for Sustainable Design and Research	PA DCED	2003-2006
Bioinductive Scaffolds	NIH	2004-2005
Sustainability as a Source of Competitive Advantage	NTC	2003-2005
Representations and Algorithms for Deformable Objects	NSF	2002-2005
Trans-Atlantic Textile Network	FIPSE	2002-2004
Spray-on Insulation System for Housing	State of PA	2002-2004
Engineering and Design Studio	State of PA	2000-2002
Haptic Simulation of Fabric Structures	NTC	2000-2002

Exploring Architectural Fabrics	NTC	2000-2002
Novel Textiles for Military Applications	DARPA	1999
Educating the Educators	NTC	2000-2002
Scale Sensitive Modelling of Braided Hybrid Composites	NTC	1998-2000
Development of self-sealing spacesuit materials	ILC Dover	1998
Materials Characterization of Elastomeric Nonwoven Fabrics	Kimberly Clark	1998
Conversion of natural fiber to textile products	Crane Paper	1998
Dynamic Response of Woven Arresting Tapes	Navy SAWC	1997-99
Apparel Research Network	DLA	1996-1999
Evaluation of Z Fiber Component in Needle Punched Nonwovens	Fiberite	1996-97
A Comparative Theoretical Study of Quasi-Static and Impact Response of Laminated and Textile Composite Structures	ARO	1996-1999
Testing and Analysis of Braided Composite Materials for Automotive Applications	Ford Motor	1994-96
Stress Analysis in Thick Walled Composite Cylinders	ONR	1995-97
Manufacturing and Analysis of Braided Composite Materials	Ford Motor	1993-94
Textile Composite Panels for Improved Indoor Air Quality	EPA	1992-95
Composite Materials for Energy Efficient Structures	Duke Power	1993-95
Prediction of Mechanical Properties of Textile Reinforced Composites	DoC	1992-95

Appearance Defects in Fabrics	DoC	1992-95
Development of Technical Glossary for Textile Composites Industry	NASA	1992
Modelling of Transverse Shear Deformation of Three Dimensionally Woven Composites	State of NC	1992-93
Geometric Modelling of Textile Reinforcements for Structural Analysis	NASA	1991-95

Exhibit B

Dr. Christopher M. Pastore Testimony List

- *Nike, Inc. v. lululemon usa, inc.*, Case No. 1:23-cv-00771 (S.D.N.Y.) (2024)
- *Watterson Construction Co. v. International Door, Inc.*, Case no. 2:22-cv-11037 (E.D.M.I) (2023)
- *Nike, Inc. v. lululemon usa, inc.*, Case No. 1:23-cv-00771 (S.D.N.Y.) (2023)
- *In re Matter of Certain Knitted Footwear*, Inv. No. 337-TA-1289 (ITC) (2022)
- *Moore v. Hunter Safety Sys., Inc.,* Case No. 1931-MC-00688 (Missouri 31st Circuit) (2021)
- *Knauf Insulation, LLC v. Johns Manville Corp.*, Case No. 1:15-cv-00111 (S.D. Indiana) (2021)
- *Strategic Partners, Inc. v. Figs, Inc.*, Case No. 2:19-cv-02286 (C.D. Cal.) (2020)