Trials@uspto.gov
Tel: 571-272-7822

Paper 12
Entered: February 28, 2022

UNITED STATES PATENT AND TRADEMARK OFFICE

---

BEFORE THE PATENT TRIAL AND APPEAL BOARD

---

SAMSUNG ELECTRONICS AMERICA, INC.,
Petitioner,

v.

PROXENSE, LLC,
Patent Owner.

---

IPR2021-01438
Patent 9,049,188 B1

---

Before THU A. DANG, KEVIN F. TURNER, and DAVID C. McKONE, *Administrative Patent Judges.*

DANG, *Administrative Patent Judge*.

DECISION
Granting Institution of *Inter Partes* Review
*35 U.S.C. § 314*

APPLE EXHIBIT 1042
APPLE v. PROXENSE
IPR2024-00782

# I. INTRODUCTION

## *A. Background*

Samsung Electronics America, Inc. ("Petitioner") filed a Petition requesting an *inter partes* review of claims 1–20 (the "challenged claims") of U.S. Patent No. 9,049,188 B1 (Ex. 1001, "the '188 patent"). Paper 1 ("Pet."). Proxense, LLC ("Patent Owner") filed a Preliminary Response. Paper 10 ("Prelim. Resp.").

Under 37 C.F.R. § 42.4(a), the Board has authority to determine whether to institute an *inter partes* review. Applying the standard set forth in 35 U.S.C. § 314(a), which requires demonstration of a reasonable likelihood that Petitioner would prevail with respect to at least one challenged claim, we grant Petitioner's request and institute an *inter partes* review of all challenged claims.

## *B. Related Proceedings*

Petitioner identifies the '188 patent as the subject of *Proxense, LLC v. Samsung Electronics, Co., Ltd. et al.*, No. 6.21-CV-00210 (W.D. Tex.) ("the parallel district court litigation"). Pet. 3.

## *C. The '188 Patent*

The '188 patent, titled "Hybrid Device Having a Personal Digital Key and Receiver-Decoder Circuit and Methods of Use," issued on June 2, 2015, from Application No. 14/171,705, with a filing date of February 3, 2014. Ex. 1001, codes (54), (45), (21), (22). The '188 patent provides a hybrid device including a personal digital key (PDK) and a receiver-decoder circuit (RDC) that are coupled for communication with each other. *Id.* at code (57).

An illustration of the embodiment of the '188 patent's hybrid device is depicted in Figure 1, reproduced below:



APPLE EXHIBIT 1042
APPLE v. PROXENSE
IPR2024-00782

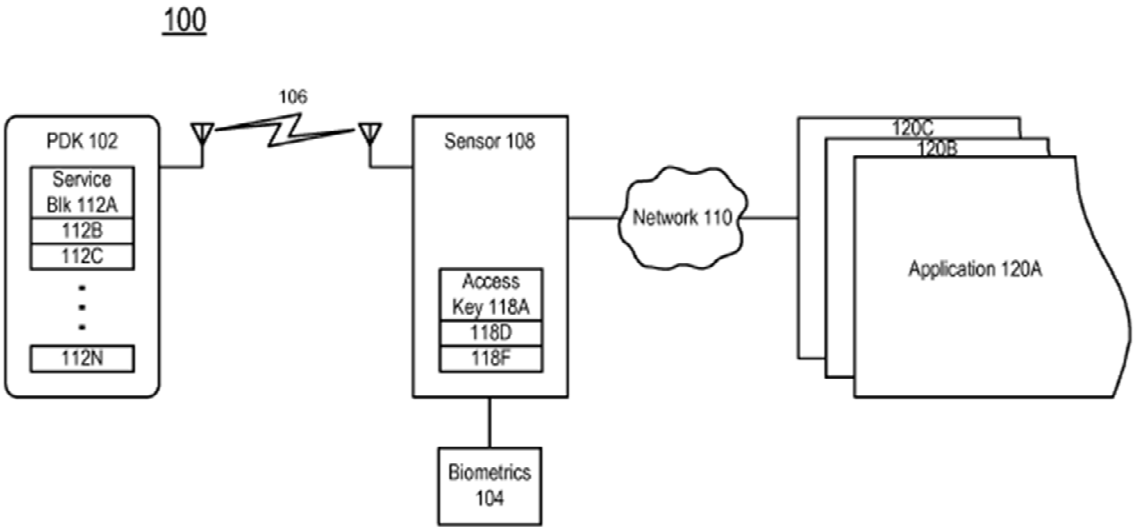


FIG. 1

Figure 1 is a block diagram of system 100 comprising PDK 102, sensor 108, network 110, and one or more applications 120 (including services). *Id.* at 2:65–3:2. In Figure 1, sensor 108 is coupled to PDK 102 by wireless link 106 and coupled to network 110 by a wired or wireless link. *Id*. at 3:2–4. In the exemplary embodiment shown in Figure 1, applications 120 are accessed over network 110, with sensor 108 being adapted to receive biometric input 104 from a user and displaying status to a user. *Id.* at 3:4–7.

In the example shown in Figure 1, sensor 108 contains three service block access keys 118A, 118D, 118F, wherein service block access keys 118 allow sensor 108 to unlock information stored in corresponding service blocks 112, which information is used as local secured information. *Id.* at 3:14–21. In one example in which a biometric is required in order to access specific service blocks in PDK 102, service block 112A is used for verification of the biometric and sensor 108 uses stored corresponding service block access key 118A to unlock biometric service 112A. *Id.* at 3:22–27. A current biometric is received using biometric input 104, and



APPLE EXHIBIT 1042
APPLE v. PROXENSE
IPR2024-00782

sensor 108 verifies the stored biometric (from service block 112A) against the recently acquired biometric (from input 104). *Id.* at 27–30.

An exemplary embodiment of sensor 108 is depicted in Figure 3, reproduced below:

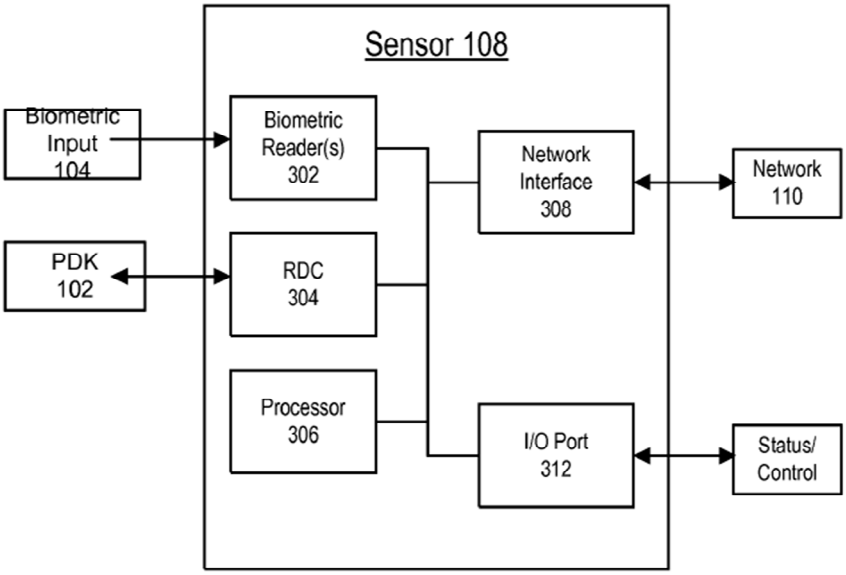


FIG. 3

Figure 3 is a block diagram of sensor 108 comprising one or more biometric readers 302, RDC 304, processor 306, network interface 308, and I/O port 312. *Id.* at 7:4–7. As shown in Figure 3, RDC 304 provides the wireless interface to PDK 102. *Id.* at 7:10–11.

Biometric reader 302 receives and processes biometric input 104 from an individual. *Id.* at 7:23–30. I/O port 312 provides general input and output interface to sensor 108. *Id.* at 7:42–48.



APPLE EXHIBIT 1042
APPLE v. PROXENSE
IPR2024-00782

*D. The Challenged Claims*

Of the challenged claims, claims 1 and 10 are independent. Independent claim 1 is illustrative of the challenged claims, and is reproduced below:

> 1. A hybrid device comprising:
>
> an integrated personal digital key (PDK) for storing local, secured biometric information for authenticating a user and capable of communicating wirelessly with an external receiver-decoder circuit (RDC); and
>
> an integrated RDC for communicating wirelessly with at least one external PDK within a proximity zone, the integrated RDC coupled to the integrated PDK by a first signal line for communication, the integrated RDC coupled to at least one other component of the hybrid device by a second signal line, one or more of the integrated RDC and integrated PDK enabling one or more of an application, a function, and a service.

Ex. 1001, 21:50–62.

*E. Asserted Grounds of Unpatentability*

Petitioner challenges the patentability of claims 1–20 of the ’188 patent on the following grounds (Pet. x):



APPLE EXHIBIT 1042
APPLE v. PROXENSE
IPR2024-00782

| Claim(s) Challenged | 35 U.S.C. §[1] | Reference(s)/Basis |
|---|---|---|
| 1–20 | 103 | Giobbi '157[2], Giobbi '139[3], Dua[4] |
| 1–7, 9–15, 17, 18 | 103 | Broadcom[5] |
| 8, 16, 19, 20 | 103 | Broadcom, Giobbi '157 |

Petitioner relies on the Declaration of Dr. Andrew Wolfe, Ph.D. (Ex. 1003) in support of its unpatentability contentions.

## II. ANALYSIS

### *A. Discretionary Denial Under 35 U.S.C. § 314(a)*

Institution of an *inter partes* review is discretionary, not mandatory. *See Cuozzo Speed Techs., LLC v. Lee*, 136 S. Ct. 2131, 2140 (2016) ("[T]he agency's decision to deny a petition is a matter committed to the Patent Office's discretion."); *Harmonic Inc. v. Avid Tech., Inc.*, 815 F.3d 1356, 1367 (Fed. Cir. 2016) ("[T]he PTO is permitted, but never compelled, to institute an IPR proceeding.").

---

[1] The Leahy-Smith America Invents Act ("AIA"), Pub. L. No. 112-29, 125 Stat. 284, 287–88 (2011), amended 35 U.S.C. §§ 102, 103, effective March 16, 2013. Because the application from which the '188 patent issued was a continuation of applications filed before this date, the pre-AIA versions of §§ 102, 103 apply.

[2] U.S. Patent Publication No. 2007/0245157 A1, published October 18, 2007, filed May 5, 2007 (Ex. 1004, "Giobbi '157").

[3] U.S. Patent Publication No. 2004/0255139 A1, published December 16, 2004, filed May 17, 2004 (Ex. 1005, "Giobbi '139").

[4] U.S. Patent No. 9,042,819 B2, issued May 26, 2015, filed September 30, 2014 (Ex. 1004, "Dua").

[5] European Patent Application No. EP 1,536,36 A1 published June 1, 2005, filed September 30, 2004 (Ex. 1007, "Broadcom").



APPLE EXHIBIT 1042
APPLE v. PROXENSE
IPR2024-00782

The decision whether to exercise discretion to deny institution under § 314(a) is based on "a balanced assessment of all relevant circumstances in the case, including the merits." Patent Trial and Appeal Board Consolidated Trial Practice Guide (Nov. 2019) ("Consolidated Trial Practice Guide"), available at https://www.uspto.gov/sites/default/files/documents/tpgnov.pdf, at 58 (citing *General Plastic Indus. Co. v. Canon Kabushiki Kaisha*, IPR2016-01357, Paper 19 at 15 (PTAB Sept. 6, 2017) (precedential)). Those circumstances include "events in other proceedings related to the same patent, either at the Office, in district courts, or the ITC." *Id.* When considering the impact of parallel litigation in a decision to institute, the Board seeks, among other things, to minimize the duplication of work by two tribunals to resolve the same issue. *See NHK Spring Co. v. Intri-Plex Techs. Inc.*, IPR2018-00752, Paper 8 at 19–20 (PTAB Sept. 12, 2018) (precedential) ("*NHK*"). In *NHK*, the Board determined that it was appropriate to consider the advanced state of a parallel district court litigation involving the same issues and an earlier trial date in determining whether to exercise its discretion to deny institution under § 314(a). *Id.*

In *Apple Inc. v. Fintiv, Inc.*, IPR2020-00019, Paper 11 (PTAB Mar. 20, 2020) (precedential) ("*Fintiv*"), the Board discussed potential applications of *NHK* and identified a non-exclusive list of factors to consider when determining whether a related, parallel district court action provides a basis for discretionary denial. *Fintiv* at 5–16. Those factors include:

> 1. whether the court granted a stay or evidence exists that one may be granted if a proceeding is instituted;
> 2. proximity of the court's trial date to the Board's projected statutory deadline for a final written decision;
> 3. investment in the parallel proceeding by the court and the parties;



APPLE EXHIBIT 1042
APPLE v. PROXENSE
IPR2024-00782

> 4. overlap between issues raised in the petition and in the parallel proceeding;
> 5. whether the petitioner and the defendant in the parallel proceeding are the same party; and
> 6. other circumstances that impact the Board's exercise of discretion, including the merits.

*Id.* at 5–6.

We now consider these factors to determine whether we should exercise discretion to deny institution under § 314(a). In evaluating the factors, we take a holistic view of whether efficiency and integrity of the system are best served by denying or instituting review. *Fintiv* at 6.

1. Whether a Stay Exists or Is Likely to be Granted if a Proceeding Is Instituted

A district court stay of parallel litigation pending resolution of an *inter partes* review allays concerns about inefficiency and duplication of efforts, which strongly weighs against exercising the authority to deny institution. *Fintiv* at 6. Here, as Petitioner points out, the district court has not granted a stay and no request for a stay has been filed. Pet. 16. We are unpersuaded by Patent Owner's contention that "[t]he case is currently before Judge Albright, who has only stayed cases . . . 'when the plaintiff has first sued other companies over a patent in a different district,'" wherein "Patent Owner has not sued others in a different district." Prelim. Resp. 6.

On the present record, neither party has produced evidence that a stay has been requested or that the district court has considered a stay in this case. Patent Owner's assertion that Judge Albright "only" stayed cases when the plaintiff has first sued in a different district (Prelim. Resp. 6) is not sufficient evidence that a stay will not likely be granted in this case.



APPLE EXHIBIT 1042
APPLE v. PROXENSE
IPR2024-00782

Further, a judge determines whether to grant a stay based on the facts of each specific case as presented in the briefs by the parties. Although Patent Owner cites to the presiding Judge's public statements (Prelim. Resp. 6 (citing Law360, May 11, 2021 ("Albright Says He'll Rarely Put cases on Hold for PTAB"))), we decline to infer, based on actions taken in different cases with different facts, how the district court would rule should a stay be requested by the parties in the case here.

On this record, we assess this factor as neutral.

2. The Trial Date in the Related District Court Litigation

If a district court's trial date is earlier than the projected statutory deadline, the Board generally has weighed this factor in favor of exercising authority to deny institution under § 314(a). *Fintiv* at 9. If the court's trial date is at or around the same time as the projected statutory deadline, the decision whether to institute will likely implicate other *Fintiv* factors, such as the resources that have been invested in the parallel proceeding. *Id.*

On January 28, 2022, the Western District of Texas entered a scheduling order setting a January 17, 2023, trial date for the parallel district court litigation. Ex. 3001, 6. Patent Owner argues that the projected statutory deadline for the final written decision is February 2023, and thus "the related litigation will likely be completed before any PTAB proceeding, if instituted," which "weighs in favor or denial." Prelim. Resp. 6.

Petitioner contends that "the PTAB has held that such close proximity of a district court trial date weighs in favor of institution." Pet. 18. Petitioner contends that "the PTAB has instituted IPR even where a district court trial is scheduled to occur *five months* before the PTAB's decision where . . . the petition was filed in the early stages of litigation." *Id.* at



APPLE EXHIBIT 1042
APPLE v. PROXENSE
IPR2024-00782

18–19. According to Petitioner, this factor "is not considered in isolation, but holistically along with other factors," wherein "Petitioner has agreed not to pursue any ground it raised or could have raised in the litigation," "this case is in its infancy with minimal investments made by the parties and the Court," and "the impact of the Delta variant of the COVID-19 virus has already begun to have a disruptive impact and may adversely impact case schedules as it did last year." *Id.* at 19.

We decline to speculate that the scheduled trial date in the parallel district court litigation will be affected due to the COVID-19 virus, as Petitioner contends. Pet. 18–19. That said, for this second *Fintiv* factor, while we look at the proximity of the trial date to the date of our final written decision, wherein the timing of the trial date is a proxy for the likelihood that the district court will reach a decision on validity before the Board issues a final written decision, as Petitioner points out, this factor is not considered in isolation, but holistically along with other factors. *See Fintiv*, Paper 11 at 6 (discussing how "there is some overlap among these factors" and "[s]ome facts may be relevant to more than one factor").

Here, the scheduled trial date in the parallel district court litigation is almost an entire year away. Thus, we view the relevance of this factor as diminished somewhat when, as discussed with respect to factor three below, this case is still at a relatively early stage, with fact discovery yet to begin. Based on these facts and circumstances, we assess this factor as neutral.

3. <u>Investment in the Parallel District Court Litigation by the District Court and the Parties</u>

We consider now the amount and type of work already completed in the parallel district court litigation by the court and the parties at the time of the institution decision. *See Fintiv* at 9.



APPLE EXHIBIT 1042
APPLE v. PROXENSE
IPR2024-00782

Patent Owner argues that at the time of the institution decision, "[s]ufficient time has been invested." Prelim. Resp. 7. Patent Owner points out that *Markman* was scheduled for December 27, 2021. *Id.* According to Patent Owner, Petitioner has already filed its opening claim construction brief and Patent Owner has already filed its responsive claim construction. *Id.*

Petitioner argues that "[t]he district court litigation is in its infancy," wherein, "Petitioner has not filed an answer." Pet. 19. Petitioner argues that "there have been *no* investments, let alone significant investments, by the Court or the parties in this case related to invalidity." *Id.*

We do not agree with Petitioner's contention that there have been *no* investments related to invalidity (Pet. 19), and instead, we recognize that the parties and the court have invested *some* effort in the parallel district court litigation to date. However, although, as Patent Owner points out, a *Markman* hearing was held, much of the invested effort is unconnected to the patentability challenges. *See Sand Revolution II, LLC v. Cont'l Intermodal Grp. – Trucking LLC*, IPR2019-01393, Paper 24 at 10–11 (PTAB June 16, 2020) (informative) ("*Sand Revolution*") (finding that *Fintiv* factor 3 "weighs only marginally, if at all" toward discretionary denial even though the district court had held a *Markman* hearing and construed the claims, because "much of the district court's investment relates to ancillary matters untethered to the validity issue itself" and "much work remains in the district court case as it relates to invalidity"). According to the Scheduling Order issued by the Western District of Texas, fact discovery in this case does not close until August 8, 2022, and expert discovery does not close until October 3, 2022. *See* Ex. 3001, 5. Thus, as Petitioner points out,



APPLE EXHIBIT 1042
APPLE v. PROXENSE
IPR2024-00782

at the time of institution, the parallel district court litigation will be in "its infancy." Pet. 19.

The Board's precedential *Fintiv* order provides the following guidance:

> [I]f, at the time of the institution decision, the district court has issued substantive orders related to the patent at issue in the petition, this fact favors denial. Likewise, district court claim construction orders may indicate that the court and parties have invested sufficient time in the parallel proceeding to favor denial.

*Fintiv* at 9–10 (footnote omitted).

Here, the parties have not explained why any such order indicates substantial investment in the parallel district court litigation, and we are unaware of any dispositive motions that have yet been filed or ruled upon. There is also no evidence that the parties have submitted briefing on any dispositive issue or that the district court has made any determination on the merits.

Accordingly, on the whole, this factor weighs against exercising discretion to deny institution under 35 U.S.C. § 314(a). In particular, in considering this factor, we find that the substantial work that remains on invalidity issues in the parallel district court litigation substantially outweighs the minimal investment so far.

4. Overlap Between Issues Raised in the Petition and in the Parallel Proceeding

This factor evaluates "concerns of inefficiency and the possibility of conflicting decisions" when substantially identical prior art is submitted in both the district court and the *inter partes* review proceedings. *Fintiv* at 12.



APPLE EXHIBIT 1042
APPLE v. PROXENSE
IPR2024-00782

Petitioner contends that, for the avoidance of doubt, it stipulates that, "if this IPR proceeding is instituted, then Petitioner will not pursue in the Litigation the specific grounds identified above in connection with the referenced patents and claim." Pet. 20. According to Petitioner, "[t]his waiver eliminates any overlap in invalidity grounds between the Litigation and an IPR instituted based on this Petition," and thus "mitigate any concerns of duplicative efforts." *Id.* (citing *Sotera Wireless, Inc. v. Masimo Corporation*, IPR2020-01019, Paper 12 (PTAB Dec. 1, 2020) (precedential) ("*Sotera*"); *Sand Revolution* at 11–12; *Google LLC et al v. Parus Holdings, Inc.*, IPR2020-00846, Paper 9 at 22 (PTAB October 21, 2020)).

Patent Owner faults Petitioner's stipulation in the Petition as being "directed only to the 'the specific grounds identified in the petition' and **does not** extend to other grounds 'that could have been reasonably raised.'" Prelim. Resp. 7. That is, according to Patent Owner, the stipulation "leaves the Petitioner free to pursue alternative grounds of invalidity based on other patents and printed publications." *Id.*

Although Petitioner could have submitted a broader stipulation similar to that provided in *Sotera*, and that "might have tipped this factor more conclusively in its favor," we nevertheless find that Petitioner's stipulation "mitigates to some degree the concerns of duplicative efforts between the district court and the Board, as well as concerns of potentially conflicting decisions." *Sand Revolution*, at 12 & n.2 (considering a stipulation that the petitioner "will not pursue the same grounds in the district court litigation."). Petitioner makes the representation in this proceeding, which we find sufficient for purposes of institution. Thus, this factor weighs at least marginally in favor of not exercising discretion to deny institution under 35 U.S.C. § 314(a).



APPLE EXHIBIT 1042
APPLE v. PROXENSE
IPR2024-00782

5. Identity of Petitioner and the Defendant in the Underlying Litigation

"If a petitioner is unrelated to a defendant in an earlier court proceeding, the Board has weighed this fact against exercising discretion." *Fintiv* at 13–14. Both parties acknowledge that Petitioner here is the defendant in the underlying litigation. Pet. 21; PO Prelim. Resp. 7. Thus, we assess this factor as neutral.

6. Other Circumstances That Impact the Board's Exercise of Discretion, Including the Merits

The final *Fintiv* factor is a catch-all that takes into account any other relevant circumstances. The decision whether to exercise discretion to deny institution under § 314(a) is based on "a balanced assessment of all relevant circumstances in the case, including the merits." Consolidated Trial Practice Guide 58.

Considering the merits of the unpatentability arguments in the Petition and Patent Owner's arguments in the Preliminary Response, as discussed below in Parts II.D and II.E, we determine that Petitioner's grounds are particularly strong. As discussed below, Petitioner presents a strong showing that claim 1 of the '188 patent would have been obvious over Giobbi '157, Giobbi '139 and Dua. For example, on this preliminary record, Petitioner has made a strong showing that Giobbi '157 teaches "an integrated personal digital key (PDK) for storing local, secured financial information," and an integrated "receiver-decoder circuit (RDC) . . . for communicating wirelessly with at least one external PDK" wherein "one or more of the integrated RDC and integrated PDK enabling one or more of an application, a function, and a service," as recited in claim 1. *See infra* Part II.D. Further, on this preliminary record, Petitioner has made a strong



APPLE EXHIBIT 1042
APPLE v. PROXENSE
IPR2024-00782

showing that, alternatively, Broadcom also teaches the contested limitation as recited in claim 1. *See infra* Part II.E.

Accordingly, at this stage of the proceeding, we determine that the merits of the challenges presented in the Petition are strong, and, therefore, favor institution.

7. Conclusion on Discretionary Denial Under § 314(a)

As noted in *Fintiv*, we consider the above six factors when taking "a holistic view of whether efficiency and integrity of the system are best served by denying or instituting review." *Fintiv* at 6. Weighing these factors in a holistic analysis, we are not persuaded that the interests of efficiency and integrity of the system would be best served by invoking our authority under § 314(a) to deny institution of a potentially meritorious Petition.

*B. Claim Construction*

We construe each claim "in accordance with the ordinary and customary meaning of such claim as understood by one of ordinary skill in the art and the prosecution history pertaining to the patent." 37 C.F.R. § 42.100(b) (2020). Under this standard, claim terms are generally given their plain and ordinary meaning as would have been understood by a person of ordinary skill in the art (POSITA) at the time of the invention and in the context of the entire patent disclosure. *See Phillips v. AWH Corp.*, 415 F.3d 1303, 1313 (Fed. Cir. 2005) (en banc).

Only those terms in controversy need to be construed, and only to the extent necessary to resolve the controversy. *See Nidec Motor Corp. v. Zhongshan Broad Ocean Motor Co. Matal*, 868 F.3d 1013, 1017 (Fed. Cir. 2017) (quoting *Vivid Techs., Inc. v. Am. Sci. & Eng'g, Inc.*, 200 F.3d 795, 803 (Fed. Cir. 1999)).



APPLE EXHIBIT 1042
APPLE v. PROXENSE
IPR2024-00782

Petitioner submits that "express interpretations of the challenged claims are not required to resolve this petition." Pet. 6. Patent Owner presents proposed constructions for "Personal Digital Key (PDK)" and "enabling one or more of an application, a function, and a service." Prelim. Resp. 3.[6]

In light of the parties' arguments and evidence, we find that it is necessary to construe only "Personal Digital Key (PDK)," to the extent necessary to resolve the disputed issues before us.[7]

"*Personal Digital Key (PDK)*" (claims 1, 10)

Claim 1 recites a "personal digital key (PDK) *for storing local, secured biometric information* for authenticating a user and capable of communicating wirelessly with an external receiver-decoder circuit (RDC)." Ex. 1001, 21:51−54 (emphasis added). Claim 10 similarly recites this limitation.

Patent Owner asserts that "stored 'information particular to a user' is defined in claims 1 and 10 as comprising at least 'local, secured biometric information.'" Prelim. Resp. 2. Thus, Patent Owner contends that "at least

---

[6] Patent Owner also states that it will file a request asking that we consider and adopt the District Court's construction "when the District Court issues its claim construction." Prelim. Resp. 1. As Patent Owner has not filed such request, for the purpose of this Decision, we need not address the district court claim construction.

[7] Although Patent Owner also proposes construction for "enabling one or more of an application, a function, and a service" (Prelim. Resp. 3), Patent Owner's proposed construction relies on its contention that "a PDK comprises memory including service blocks unlocked by an access key provided to the PDK." *Id.* at 4. For purposes of this Decision, we need not address the construction for the "enabling" limitation separate from the construction for "PDK."



APPLE EXHIBIT 1042
APPLE v. PROXENSE
IPR2024-00782

a portion of the PDK's memory must be 'local, secured' information held in local secure memory," wherein "[t]he specification explicitly defines 'local secure memory' as a service block unlocked by an access key, and 'local secured information' as information stored in a service block unlocked by an access key." *Id.* Patent Owner references Figure 2 of the Specification for showing that "each service block 112 can be used as **local secure memory** for the corresponding application 120," and thus contends that "the specification explicitly defines 'local secure memory' as a service block unlocked by an access key." *Id.* at 2–3 (citing Ex. 1001, 5:27–31, Fig. 2). According to Patent Owner, the claimed PDK "must have memory comprising a service block unlocked by an access key provided to the PDK." *Id.* at 3.

Petitioner does not propose a claim construction but relies on Giobbi '157's PDK 202 comprising memory 210 for storing "biometric profile" in "***tamper-proof format***" and Broadcom's Access Device 102 for storing "biometric characteristic" that is "***encrypted***." Pet. 22–27, 52–56 (citing Ex. 1004 ¶¶ 11, 28, 30, 35, 37–38, 41, 50, Fig. 2–3; Ex. 1007 ¶¶ 114, 135–137, 165, Figs. 1, 3, 6; Ex. 1003 ¶¶ 39–42, 49–50, 94–99).

Reading Patent Owner's proposed construction and Petitioner's contention concerning the term, both parties agree that "PDK" for "storing local, secured biometric information" for authenticating a user, as claimed, comprises a local memory for storing biometric information for authenticating a user, wherein the information is secured. *See* Pet. 22–27, 52–56; Prelim. Resp. 2−3. An ordinarily skilled artisan would have appreciated the definition of "storing local, secured biometric information" set forth in various dictionaries as the general knowledge in the art. However, nothing in the Specification or the general knowledge in the art



APPLE EXHIBIT 1042
APPLE v. PROXENSE
IPR2024-00782

limits a PDK for storing "local, secured biometric information" to having "memory comprising a service block unlocked by an access key provided to the PDK ," as Patent Owner proposes. Prelim. Resp. 2–3. Thus, we determine that "local, secured biometric information" does not require being stored by a PDK that must have memory comprising a service block unlocked by an access key provided to the PDK. *Id.*

We are unpersuaded by Patent Owner's contention that "[t]he specification explicitly defines 'local secure memory' as a service block unlocked by an access key, and 'local secured information' as information stored in a service block unlocked by an access key." Prelim. Resp. 2. Although Patent Owner points to Figure 2 of the Specification for such explicit[] defin[ition]," Figure 2 of the Specification merely shows an exemplary embodiment and ***not*** a definition, wherein, as Patent Owner also points out, such teaching in the Specification shows that "each service block 112 ***can be used*** as local secure memory for the corresponding application 120." *Id.* at 2–3 (citing Ex. 1001, 5:27–31, Fig. 2) (emphasis added). That is, although the referenced portion of the Specification indicates that a "service block" ***can*** be used as "local secure memory," nothing in the Specification limits the local storage memory to "a service block unlocked by an access key," as Patent Owner contends. Prelim. Resp. 2. Any special definition for "local storage memory" limiting it to "a service block unlocked by an access key" must be set forth in the Specification with reasonable clarity, deliberateness, and precision. *In re Paulsen*, 30 F.3d 1475, 1480 (Fed. Cir. 1994).

In view of the Specification and the general knowledge in the art, we determine that the term "PDK" for "storing local, secured biometric information" for authenticating a user, as claimed, encompasses a local



APPLE EXHIBIT 1042
APPLE v. PROXENSE
IPR2024-00782

memory for storing biometric information for authenticating a user, wherein the information is secured. The parties are invited to address this claim construction issue during trial, if so desired.

*C.* Principles of Law

A patent claim is unpatentable under 35 U.S.C. § 103(a) if the differences between the claimed subject matter and the prior art are such that the subject matter, as a whole, "would have been obvious at the time the invention was made to a person having ordinary skill in the art to which said subject matter pertains." *KSR Int'l Co. v. Teleflex Inc*., 550 U.S. 398, 406 (2007). The question of obviousness is resolved on the basis of underlying factual determinations including: (1) the scope and content of the prior art; (2) any differences between the claimed subject matter and the prior art; (3) the level of ordinary skill in the art; and (4) objective evidence of non-obviousness.[8] *See Graham v. John Deere Co*., 383 U.S. 1, 17–18 (1966).

*D. Claims 1–20 as Obvious over Giobbi '157, Giobbi '139, Dua*

Petitioner contends that claims 1–20 of the '188 patent would have obvious over by Giobbi '157, Giobbi '139, and Dua. Pet. 22–50. In response, Patent Owner contends that "the Petition fails to establish the combination of [] Giobbi '157, Giobbi '139, and Dua invalidates claims 1-20." Prelim. Resp. 10–15.

1. Giobbi '157

Giobbi '157, titled "Two-Level Authentication for Secure Transaction," published on October 18, 2007, with a filing date of May 5, 2007. Ex. 1004, codes (54), (43), (22). Giobbi '157 discloses a PDK that

[8] Neither party presents evidence or arguments regarding objective evidence of non-obviousness in the instant proceeding at this time.



APPLE EXHIBIT 1042
APPLE v. PROXENSE
IPR2024-00782

stores biometric profiles in "a tamper-proof memory that is acquired in a secure trusted process," wherein the biometric profiles comprise a "representation of physical or behavioral characteristics that are uniquely associated with an individual that owns and carries the PDK." *Id.* at code (57). An illustration of Giobbi '157's system for securely authenticating an individual for transaction-processing and/or access control applications is depicted in Figure 1, reproduced below.

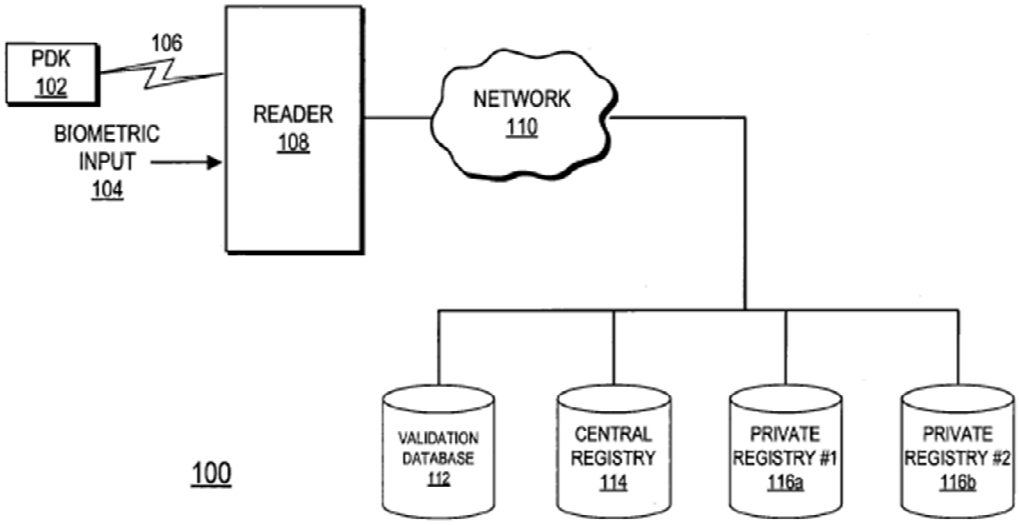


FIG. 1

Figure 1 is a block diagram of system 100 for secure electronic authentication comprising PDK 102, reader 108, network 110, and one or more external databases including validation database 112. *Id.* ¶ 26. As shown in Figure 1, reader 108 is coupled to PDK 102 by wireless link 106 and coupled to network 110 by either a wired or wireless link. *Id.* Reader 108 is also adapted to receive biometric input 104 from a user. Network 110 couples validation database 112, central registry 114 and two private registries 116 to reader 108. *Id.*

Reader 108 is depicted in Figure 3, reproduced below.



APPLE EXHIBIT 1042
APPLE v. PROXENSE
IPR2024-00782

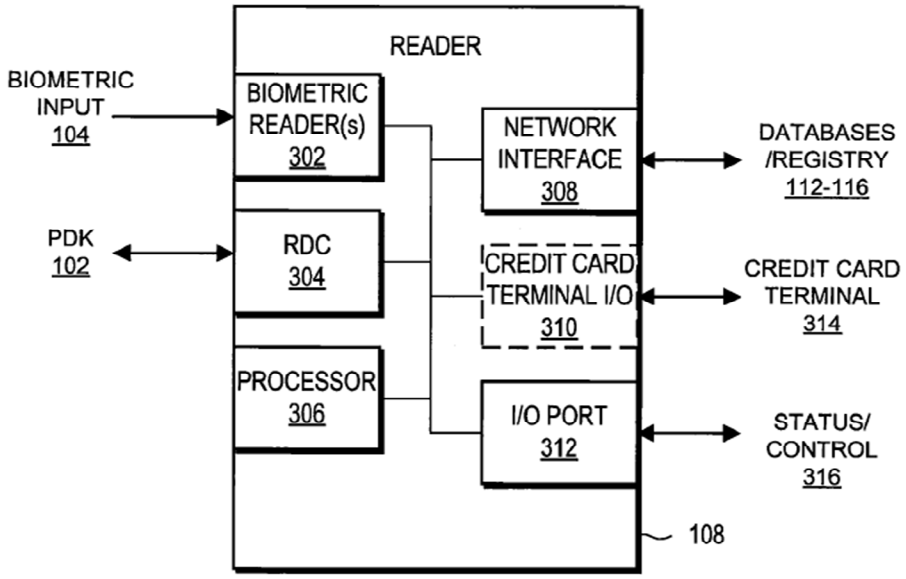


FIG. 3

Figure 3 is a block diagram of reader 108 that includes one or more biometric readers 302, receiver-decoder circuit (RDC) 304, processor 306, network interface 308, I/O port 312 and optionally credit card terminal I/O 310. *Id.* ¶ 49. As shown in Figure 3, RDC 304 provides wireless interface to PDK 102, wherein RDC 304 wireless receives data from PDK 102 in an encrypted format and decodes the encrypted data for processing by processor 306. *Id.* ¶ 50. Generally, processor 306 processes data received by reader 108 or data to be transmitted by reader 108, wherein biometric input 104 received by biometric reader 302 can be processed and compared to biometric profile 220 received from PDK 102 in order to determine if a transaction should be authorized. *Id.* ¶ 52.

PDK 102 is depicted in Figure 2, reproduced below.



APPLE EXHIBIT 1042
APPLE v. PROXENSE
IPR2024-00782

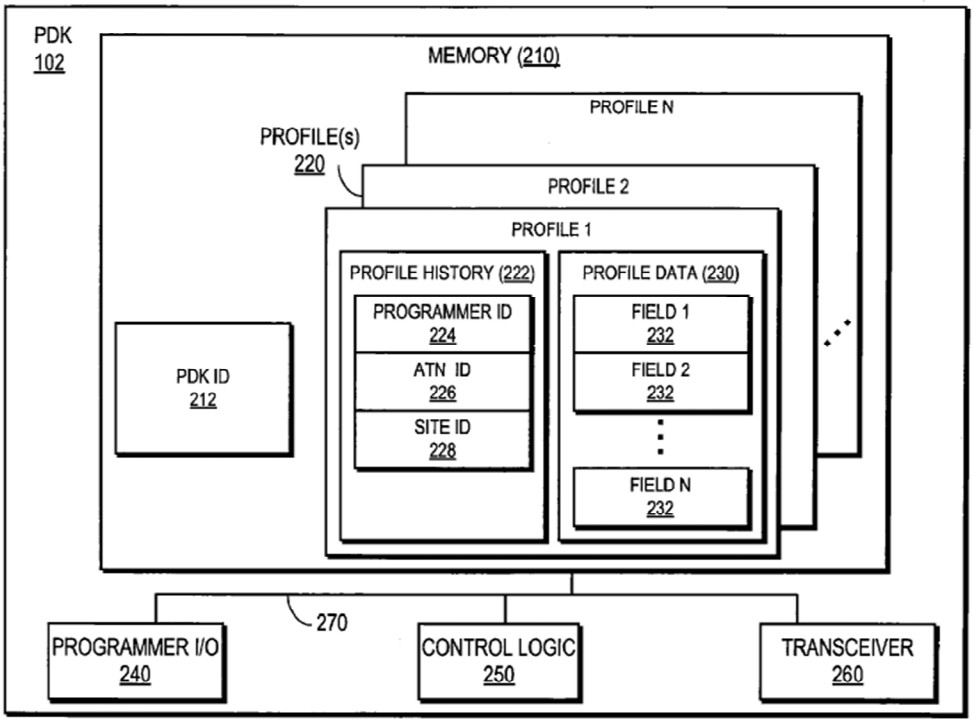


FIG. 2

Figure 2 is a block diagram of PDK 102 comprising memory 210, programmer I/O 240, control logic 250, and transceiver 260, coupled by bus 270. *Id.* ¶ 35. Memory 210 can be any combination of memory types, including physical access secured and tamperproof memories, that stores unique PDK ID 212 and one or more profiles 220. *Id.* ¶ 36. Profiles 220 may comprise biometric profile, for example, which includes profile data 230 representing physical and/or behavioral information that can uniquely identify the PDK owner. *Id.* ¶ 37.

2. Analysis

Petitioner contends that the claims of the ’188 patent recite a “hybrid device” that “includes both an internal PDK (key) and an internal RDC (lock)” wherein “this type of digital lock-and-key system was known years before the ’188 patent was filed.” Pet. 1. Petitioner contends that Giobbi



APPLE EXHIBIT 1042
APPLE v. PROXENSE
IPR2024-00782

'157 teaches an "integrated PDK" that is "capable of communicating wirelessly with an external receiver-decoder circuit (RDC)." *Id.* at 7.

*i. Preamble, a "hybrid device" (claim 1)*

Petitioner contends that, "[t]o the extent that the preamble is limiting, Giobbi '157 discloses a hybrid device, such as a cell phone." Pet. 22 (citing Ex. 1004 ¶¶ 12, 35). Petitioner provides an annotated Figure 3 of Giobbi '157, shown below, to illustrate its contentions.

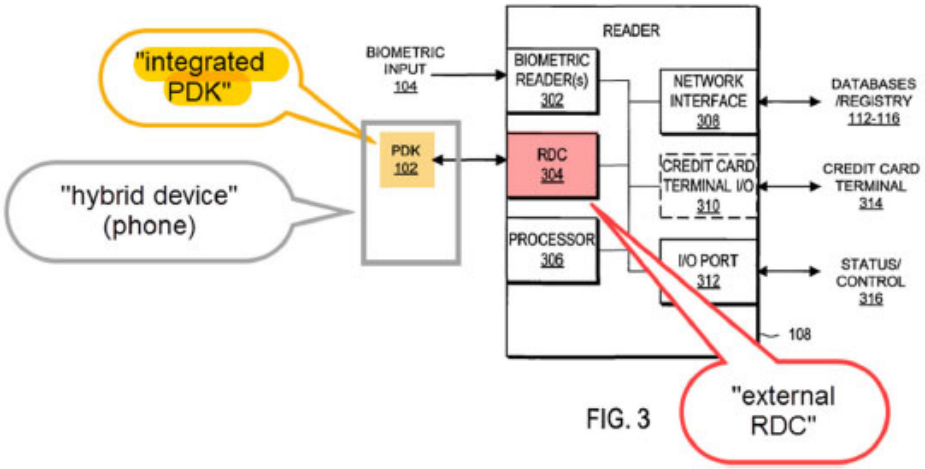


Annotated Figure 3 of Giobbi '157 in the Petition, according to Petitioner, illustrates "Giobbi's hybrid device (cell phone) [that] carries an integrated PDK," wherein the PDK "communicates with an external RDC." Pet. 22 (citing Ex. 1003 ¶ 38).

At this stage of the proceeding, Patent Owner does not present arguments in the Preliminary Response addressing the specific merits of



APPLE EXHIBIT 1042
APPLE v. PROXENSE
IPR2024-00782

Petitioner's contentions with respect to the preamble. *See generally* Prelim. Resp. 10–15.[9]

Having reviewed all of Petitioner's assertions regarding this claim limitation, as well as the supporting evidence, we determine on this record that Petitioner has established a reasonable likelihood of establishing that the combination of Giobbi '157, Giobbi '139, and Dua teaches a "hybrid device."

*ii. "an integrated personal digital key (PDK) for storing local, secured biometric information for authenticating a user and capable of communicating wirelessly with an external receiver-decoder circuit (RDC)" (claim 1)*

Petitioner contends that "Giobbi '157 expressly discloses a 'Personal Digital Key (PDK),'" wherein "[the] PDK is integrated into a hybrid device, such as a cell phone." Pet. 23 (citing Ex. 1004 ¶¶ 11, 35). Petitioner also contends that "Giobbi '157 further discloses that its integrated PDK is used for storing information in local storage," and in particular, the PDK includes "memory 210 for storage." *Id.* at 24 (citing Ex. 1004 ¶ 28, Fig. 3; Ex. 1003 ¶ 39). According to Petitioner, "Giobbi '157 explains that the information stored locally on its integrated PDK is secured information for authenticating a user," such as "biometric information," wherein "this biometric information is used for authentication, e.g., fingerprint authentication." *Id.* at 25–26 (citing Ex. 1004 ¶¶ 28, 37–38, 41).

---

[9] Because there is no dispute that Giobbi '157 in view of Giobbi '139 and Dua teaches a hybrid device, as recited in the preamble, for purposes of institution, we need not decide whether the preamble is limiting. *See Nidec*, 868 F.3d at 1017 (noting that "we need only construe terms 'that are in controversy'" (quoting *Vivid*, 200 F.3d at 803)).



APPLE EXHIBIT 1042
APPLE v. PROXENSE
IPR2024-00782

Petitioner then contends that "Giobbi '157 teaches that information stored on a PDK, such as fingerprint information, is transmitted to an external 'RDC' located, for example, on a 'Reader 108,'" wherein "this communication between the integrated PDK and external RDC (on the Reader) is done wirelessly." Pet. 26–27 (citing Ex. 1004 ¶¶ 30, 49–50, Fig. 3; Ex. 1003 ¶ 42).

Patent Owner replies that the claimed PDK "'for storing local, secured biometric information for authenticating a user' must have memory comprising a service block unlocked by an access key provided to the PDK." Prelim. Resp. 10. Although Patent Owner acknowledges that Giobbi '157 discloses "a 'portable device, referred to herein as a Personal Digital Key or "PDK", [that] stores one or more profiles . . . in a tamper-proof memory,'" Patent Owner contends that "Giobbi '157 does not, however, disclose or suggest that tamper proofing requires, or that it can include, a service block unlocked by an access key as in the challenged claim(s)." *Id.* at 10–11 (citing Pet. 24–26; Ex. 1004 ¶¶ 11, 28, 36).

We find Patent Owner's arguments unavailing. In particular, as Patent Owner acknowledges, Petitioner relies on Giobbi '157 for teaching the claimed PDK, wherein Giobbi '157's PDK "stores one or more profiles . . . in a tamper-proof memory." Prelim. Resp. 10–11. That is, Patent Owner does not contest Petitioner's reliance on Giobbi '157 for teaching a PDK "for storing local, secured biometric information." *Id.*

In our claim construction section above, we gave "PDK" for "storing local, secured biometric information" its ordinary and customary meaning as a local memory for storing biometric information for authenticating a user, wherein the information is secured. An interpretation of "PDK" for "storing local, secured biometric information" as "must have memory comprising a



APPLE EXHIBIT 1042
APPLE v. PROXENSE
IPR2024-00782

service block unlocked by an access key provided to the PDK" as Patent Owner asserts, does not comport with the aforementioned construction. Prelim. Resp. 10.

As illustrated in annotated Figure 3 of Giobbi '157 set forth in the Petition, Giobbi '157 discloses an integrated PDK capable of communicating with an RDC.

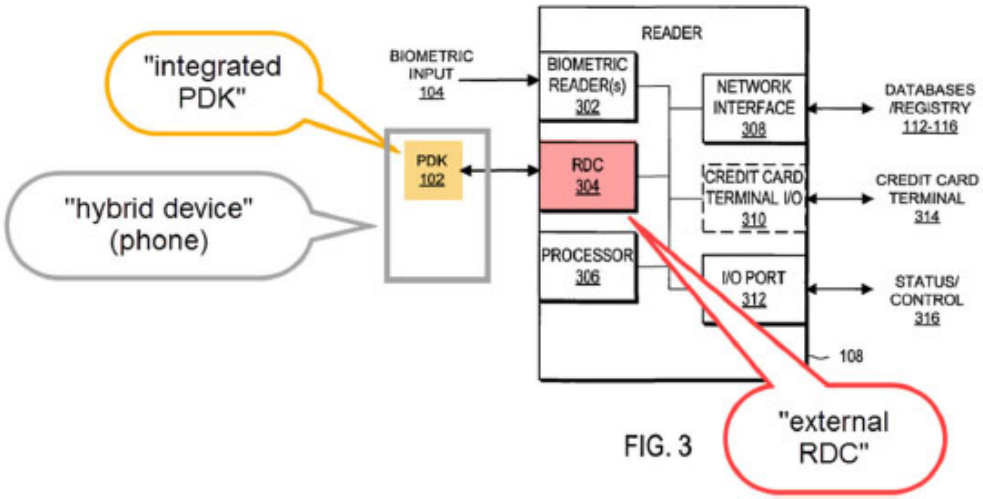

FIG. 3

Pet. 24. Annotated Figure 3 of Giobbi '157, as discussed in the Petition, illustrates PDK 102 (yellow) communicating with RDC 304 (red). *Id.* As Petitioner contends, PDK 102 locally stores digital information "***in a tamper-proof format*** that uniquely associates the PDK 102 with an individual." *Id.* (citing Ex. 1004 ¶ 28). Further, as Petitioner contends, "Giobbi '157 further teaches that this information may be biometric information, i.e., a 'biometric profile.'" *Id.* at 25 (citing Ex. 1004 ¶¶ 37–38).

On this preliminary record, we are persuaded that Petitioner has made a sufficient showing that Giobbi '157 in view of Giobbi '139 and Dua teaches "an integrated personal digital key (PDK) for storing local, secured biometric information for authenticating a user and capable of



APPLE EXHIBIT 1042
APPLE v. PROXENSE
IPR2024-00782

communicating wirelessly with an external receiver-decoder circuit (RDC)," as recited in claim 1.

*iii. "an integrated RDC for communicating wirelessly with at least one external PDK within a proximity zone . . . , one or more of the integrated RDC and integrated PDK enabling one or more of an application, function, and service" (claim 1)*

Petitioner contends that a person of ordinary skill in the art (POSITA) "would have been motivated to integrate an RDC into Giobbi '157's hybrid device for communication with external PDKs based, in part on the teachings of Giobbi '139." Pet. 28. In particular, Petitioner contends that Giobbi '139 "expressly teaches integrating an RDC into the same type of hybrid device disclosed in Giobbi '157, a cell phone," wherein "a 'Personal Digital Key Digital Content Security System (PDK-DCSS) is used to protect computers from unauthorized use and protect the digital content stored on computers from being wrongfully accessed, copied, and/or distributed.'" *Id.* (citing Ex. 1005, Abstract).

According to Petitioner, "Giobbi '139 teaches that RDCs should be incorporated into hybrid devices like cell phones because these devices 'commonly included' data storage," wherein "Giobbi '139 identified such a configuration as an 'enhancement.'" Pet. 29 (citing Ex. 1005 ¶¶ 87–88). Further, according to Petitioner, "Giobbi '157 teaches that it is advantageous to incorporate PDKs into 'commonly carried items,' like phone, since it would eliminate the need for a user to carry a separate PDK device and would reduce the risk of loss." *Id.* at 30 (citing Ex. 1005 ¶ 35; Ex. 1003 ¶ 48). In addition, Petitioner contends that "the Dua patent's RFID system configuration also provides motivation to integrate and RDC into Giobbi



APPLE EXHIBIT 1042
APPLE v. PROXENSE
IPR2024-00782

'157's hybrid device." *Id.* at 31. In particular, according to Petitioner, "Dua teaches a hybrid device –e.g., a cell phone—which establishes wireless connections with other devices to enable functions and exchange data." *Id.* (citing Ex. 1006, 6:46–65).

Petitioner then contends that "Giobbi '157 enables a function or service for providing 'efficient, secure, and highly reliable authentication for transaction processing' using a PDK in conjunction with an RDC." Pet. 40 (citing Ex. 1004, Abstract, ¶ 11). In particular, according to Petitioner, "[t]his transaction is made possible by transmitting authentication information from the integrated PDK to the external RDC," and thus, "the integrated PDK enables this application/function/service." *Id.*

Patent Owner responds that the exchanged information referenced by the Petitioner "is not described as being unlocked prior to transmission with an access key provided by the application, function, or service to be enabled as required by the challenged claims." Prelim. Resp. 12. In particular, according to Patent Owner, "while the PDK may send a message containing various account information, Giobbi '157 does not describe unlocking such information from a service block using an access key prior to transmission." *Id.* at 13. Patent Owner also contends that "Giobbi '139 fails to disclose that the 'activation code' is unlocked from the physical key prior to transmission with an access key provided by the playing device." *Id.* at 15. Accordingly, Patent Owner contends that "neither Giobbi '157 nor Giobbi '139 disclose . . . 'enabling one or more of an application, a function, and a service.'" *Id.*

We find Patent Owner's arguments unavailing. In particular, similar to the claim limitation above, for "enabling one or more of an application, a function, and a service," Patent Owner is again relying on a claim construction of "PDK" as requiring "a service block unlocked by an access



APPLE EXHIBIT 1042
APPLE v. PROXENSE
IPR2024-00782

key." Prelim. Resp. 11. As discussed above, an interpretation requiring a "PDK" to "have memory comprising a service block unlocked by an access key provided to the PDK" as Patent Owner asserts (*id.* at 12–13), does not comport with the aforementioned construction. Thus, we disagree with Patent Owner's contention that the "enabling" limitation "is a message comprising information from a service block of a PDK unlocked prior to transmission with an access key provided by the application, function, or service to be enabled." *Id.* at 11.

As illustrated in annotated Figure 3 of Giobbi '157 set forth in the Petition, Giobbi '157 discloses RDC 304 for communicating wireless with PDK 102 within a proximity zone. Further, as Petitioner contends, Giobbi '139 teaches "integrating an RDC into the same type of hybrid device disclosed in Giobbi '157, a cell phone," wherein a security system is used "to protect computers from unauthorized use and protect the digital content stored on computers.'" Pet. 28 (citing Ex. 1005, Abstract). As Petitioner points out, "Giobbi '139 identified such a configuration as an 'enhancement,'" "Giobbi '157 teaches that it is advantageous to incorporate PDKs into 'commonly carried items,' like phone, since it would eliminate the need for a user to carry a separate PDK device and would reduce the risk of loss," and "the Dua patent's RFID system configuration also provides motivation to integrate an RDC into Giobbi '157's hybrid device." *Id.* at 29–31 (citing Ex. 1005 ¶¶ 35, 87–88; Ex. 1006, 6:46–65; Ex. 1003 ¶ 48).

On this preliminary record, we are persuaded that Petitioner has made a sufficient showing that Giobbi '157 in view of Giobbi '139 and Dua teaches "an integrated RDC for communicating wirelessly with at least one external PDK within a proximity zone," as recited in claim 1.



APPLE EXHIBIT 1042
APPLE v. PROXENSE
IPR2024-00782

Petitioner then relies on Giobbi '157 for "enabl[ing] a function or service for providing 'efficient, secure, and highly reliable authentication for transaction processing' using a PDK in conjunction with an RDC," wherein the transaction is made possible "by transmitting authentication information from the integrated PDK to the external RDC." Pet. 40 (citing Ex. 1004, Abstract, ¶ 11). That is, as Patent Owner acknowledges, Petitioner asserts that the "enabling" limitation "can be found in the authentication process" which includes "sending various messages between a PDK and RDC," wherein a "first exchange of information" is included "to validate a PDK and a second exchange of purchasing means information." Prelim. Resp. 11–13.

As discussed above, we disagree with Patent Owner's contention that the "enabling" limitation "is a message comprising information from a service block of a PDK unlocked prior to transmission with an access key provided by the application, function, or service to be enabled." Prelim. Resp. 11. Here, Giobbi '157 teaches that biometric input 104 is compared to biometric profile 220 received from PDK 102 in order to determine if a transaction should be authorized. Ex. 1004 ¶ 52. We are persuaded by Petitioner's reliance on Giobbi '157's "transmitting of authentication information from the integrated PDK to the external RDC" to make "possible" (i.e. enabling) an application, function, and service (i.e., the authorized transaction). *See* Pet. 40 (citing Ex. 1004, Abstract, ¶ 11).

On this preliminary record, we are persuaded that Petitioner has made a sufficient showing that Giobbi '157 in view of Giobbi '139 and Dua teaches "at least one or more of the integrated RDC and integrated PDK enabling one or more of an application, function, and service," as recited in claim 1.



APPLE EXHIBIT 1042
APPLE v. PROXENSE
IPR2024-00782

*iv. Remaining limitations of claim 1*

Petitioner provides detailed explanations as to how the combination of Giobbi '157, Giobbi '139, and Dua teaches the remaining claim limitations as recited in independent claim 1, citing Dr. Wolfe's testimony for support. Pet. 37–40 (citing Ex. 1004, Abstract, ¶¶ 27, 35, Fig. 3; Ex. 1005, Abstract, ¶¶ 22–44, 71–73, 87–90, 97, Figs. 11, 12, 14; Ex. 1006, Abstract, 1:41–51, 2:22–37, 6:46–65, 12:60–61, 13:19–14:64, 16:31–34, Figs. 4A, 6; Ex. 1003 ¶¶ 57–62). For example, Petitioner contends that "Giobbi '139 expressly teaches coupling an integrated RDC and an integrated PDK by a signal line for communication" (Pet. 37 (citing Ex. 1005 ¶¶ 41, 71–73)); and that "Giobbi '139 further teaches that the integrated RDC is coupled to a variety of other components on the hybrid device" (*id.* at 39–40 (citing Ex. 1005 ¶¶ 88–89)).

At this stage in the proceeding, Patent Owner does not address separately Petitioner's explanations and supporting evidence regarding the remaining limitations in claim 1. *See generally* Prelim. Resp.

Having reviewed Petitioner's arguments and supporting evidence in the present record, we determine Petitioner has demonstrated a reasonable likelihood that it will prevail on its assertion that independent claim 1 would have been obvious over Giobbi '157, Giobbi '139, and Dua.

*v. Claims 2–20 over Giobbi '157, Giobbi '139, and Dua*

Petitioner provides detailed explanations as to how the combination of Giobbi '157, Giobbi '139, and Dua renders the limitations as recited in claims 2–20 as obvious, citing Dr. Wolfe's testimony for support. Pet. 42–50 (citing Ex. 1004, Abstract, ¶¶ 12, 35, 63, 65, 74; Ex. 1003 ¶¶ 65–91).



APPLE EXHIBIT 1042
APPLE v. PROXENSE
IPR2024-00782

At this stage in the proceeding, Patent Owner does not address separately these explanations and supporting evidence by Petitioner regarding claims 2–20. *See* generally Prelim. Resp.

Having reviewed Petitioner's arguments and supporting evidence in the present record, we determine Petitioner has demonstrated a reasonable likelihood that it will prevail on its assertion that claim 2–20 would have been obvious over the combination of Giobbi '157, Giobbi '139, and Dua.

*E. Claims 1–20 as obvious over Broadcom (and Giobbi '157)*

Alternatively, Petitioner contends that claims 1–7, 9–15, 17, and 18 of the '188 patent also would have been obvious over Broadcom (Pet. 50–67), and that claims 8, 16, 19, and 20 of the '188 patent would have been obvious over Broadcom in view of Giobbi '157. Pet. 67–68. In response, Patent Owner contends that Petitioner fails to demonstrate that Broadcom discloses or renders obvious the claim limitations. Prelim. Resp. 15–20.

1. Broadcom

Broadcom, titled "Proximity Authentication System," published on June 1, 2005, with a filing date of September 30, 2004. Ex. 1005, codes (54), (43), (22). Broadcom discloses controlling access to secured services based on the proximity of a wireless token to a computing device through which access to the secured services is obtained, wherein an authorized user is provided access to a service only when the wireless token assigned to the user is in the proximity of the computing device. *Id.* at code (57). A user's credential may be stored on the token and a reader may be implemented within a security boundary on the computing device, and thus, the credential may be passed to the security boundary without passing through the computing device via software messages or applications. *Id.* An illustration



APPLE EXHIBIT 1042
APPLE v. PROXENSE
IPR2024-00782

of Broadcom's proximity-based authentication system is depicted in Figure 1, reproduced below.

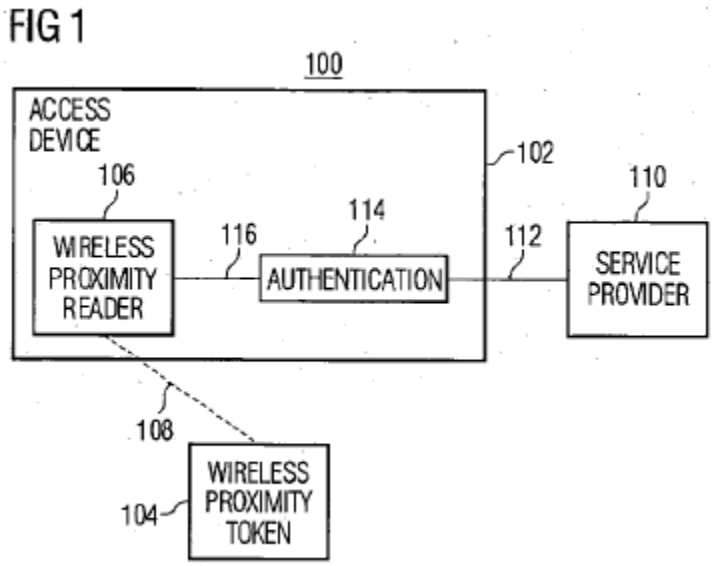


Figure 1 is a block diagram of system 100 comprising access device 102 used to determine whether wireless token 104 assigned to a user or users is proximate to access device 102. *Id.* ¶¶ 110–111. As shown in Figure 1, wireless proximity reader 106 is configured to receive signals 108 from wireless proximity token 104, wherein signals 108 includes information that uniquely identifies wireless proximity token 104 and includes credentials (e.g., a password) that may be used to access a secured service provided by service provider 110. *Id.* ¶ 111.

2. Analysis

Petitioner contends that Broadcom teaches "a system for secured access to a service," wherein a user's credentials are stored on a token and this token is then read by a reader. Pet. 50 (citing Ex. 1007, Abstract). In particular, according to Petitioner, the device including the reader authenticates the token and permits access to the secured service after



APPLE EXHIBIT 1042
APPLE v. PROXENSE
IPR2024-00782

authentication. *Id.* (quoting Ex. 1003 ¶ 92). Petitioner provides an annotated Figure 1 of Broadcom, shown below, to illustrate its contentions.

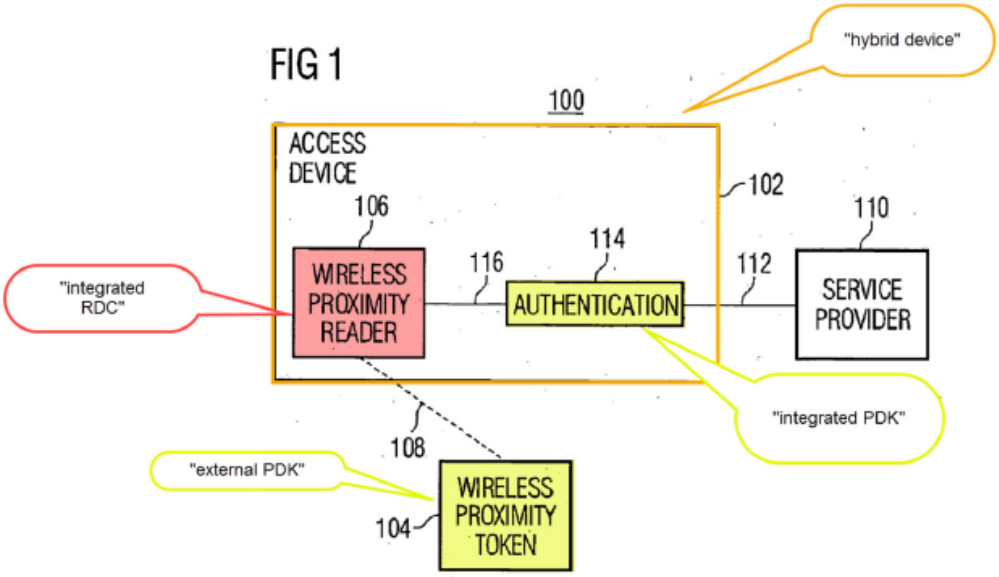


Annotated Figure 1 of Broadcom in the Petition, according to Petitioner, illustrates access device 102 (orange) as the claimed "hybrid device," that requests access to service 110 after verifying that information sent from wireless proximity token 104 (yellow) includes a credential associated with an authorized user and/or access device. Pet. 51 (citing Ex. 1007 ¶¶ 119, 113–118). As shown in annotated Figure 1, wireless proximity token (yellow) is wirelessly connected (108) to wireless proximity reader 106 (red).

*i. "an integrated personal digital key (PDK) for storing local, secured biometric information for authenticating a user" and "capable of communicating wirelessly with an external receiver-decoder circuit (RDC)" (claim 1)*

Petitioner contends that "Broadcom teaches that its Access Device 102 includes an integrated PDK," wherein "Broadcom's internal memory—part the claimed PDK—is used for storing information locally." Pet. 52–53



APPLE EXHIBIT 1042
APPLE v. PROXENSE
IPR2024-00782

(citing Ex. 1007, Fig. 1; Ex. 1003 ¶ 94). In particular, according to Petitioner, "Broadcom teaches that Access Device includes 'Data Memory 314' which stores, e.g., security keys." *Id.* (citing Ex. 1007 ¶¶ 135–137).

Furthermore, according to Petitioner, "besides a security key, a 'biometric characteristic' can be used to authenticate a user," wherein "the user may be asked to input a password and/or provide a biometric (e.g., a fingerprint) to a biometric reader to further verify the authenticity of the user." Pet. 54 (quoting Ex. 1007 ¶ 114). Petitioner contends that "this secured biometric information is stored on data memory 314 (part of the integrated PDK)." *Id.* (quoting Ex. 1003 ¶ 96). According to Petitioner, information stored in memory is "secured, in particular, it is encrypted." *Id.* (citing Ex. 1007 ¶ 14; Ex. 1003 ¶ 97).

Petitioner further contends that "Broadcom's integrated PDK is capable of communicating wirelessly with an external receiver decoder circuit (RDC)," because "Broadcom's hybrid device communicates wirelessly through a network interface with an external access point." Pet. 55 (citing Ex. 1007, Fig. 6; 1003 ¶ 98). According to Petitioner, "Broadcom explains that a token may send authentication information to an integrated RDC (i.e., the proximity reader)." *Id.* (citing Ex. 1007 ¶ 165). That is "[t]he access controller, which is involved in the determination whether to grant access to the service, is the claimed external RDC." *Id.* at 56 (citing Ex. 1003 ¶ 99).

Patent Owner replies that Broadcom's "'data memory 314' is not unlocked by an access [] key provided by the service provider." Prelim. Resp. 16. In particular, Patent Owner repeats the argument that "the specification explicitly defines 'local secured information' as information



APPLE EXHIBIT 1042
APPLE v. PROXENSE
IPR2024-00782

stored in a service block unlocked by an access key provided to the PDK." *Id.*

We find Patent Owner's arguments unavailing. In particular, as Patent Owner acknowledges, Petitioner relies on Broadcom's "data memory 314" for teaching the claimed PDK (Prelim. Resp. 16–17), wherein Petitioner contends that data memory 314 stores encrypted information that includes biometric information (Pet. 54). That is, Patent Owner does not contest Petitioner's reliance on Broadcom for teaching a PDK "for storing local, secured biometric information." Prelim. Resp. 16–17.

As discussed above, an interpretation of "PDK" for "storing local, secured biometric information" as being required to be "unlocked by an access with key provided by the service provider," as Patent Owner asserts, does not comport with the aforementioned construction. Prelim. Resp. 16.

Here, Petitioner relies on Broadcom's access device 102 for including "an integrated PDK," wherein "Broadcom's internal memory" (i.e., data memory 314) is "part [of] the claimed PDK" and "used for storing information locally," such as security keys. Pet. 52–53 (citing Ex. 1007 ¶¶ 135–137, Fig. 1; Ex. 1003 ¶ 94). As Petitioner contends, "a 'biometric characteristic' can be used to authenticate a user," wherein "this secured biometric information is stored on data memory 314 (part of the integrated PDK)." *Id.* at 54 (quoting Ex. 1007 ¶ 114). According to Petitioner, in Broadcom, "[i]nformation stored in memory is secured, in particular, it is encrypted." *Id.* (citing Ex. 1007 ¶ 14; Ex. 1003 ¶ 97).

Furthermore, Petitioner also relies on Broadcom for teaching that the "integrated PDK" is "capable of communicating wirelessly with an external receiver decoder circuit (RDC)," because Broadcom's hybrid device communicates wirelessly through a network interface with an external



APPLE EXHIBIT 1042
APPLE v. PROXENSE
IPR2024-00782

access point. Pet. 55 (citing Ex. 1007, Fig. 6; 1003 ¶ 98). According to Petitioner, "[t]he access controller, which is involved in the determination whether to grant access to the service, is the claimed external RDC." *Id.* at 56 (citing Ex. 1003 ¶ 99).

On this preliminary record, we are persuaded that Petitioner has made a sufficient showing that Broadcom teaches "an integrated personal digital key (PDK) for storing local, secured biometric information for authenticating a user and capable of communicating wirelessly with an external receiver-decoder circuit (RDC)," as recited in claim 1.

*ii. "an integrated RDC for communicating wirelessly with at least one external PDK within a proximity zone . . . , one or more of the integrated RDC and integrated PDK enabling one or more of an application, function, and service" (claim 1)*

Petitioner contends that "Broadcom's hybrid device includes an integrated RDC, the wireless proximity reader," wherein "the wireless proximity reader communicates with an external token seeking access to a service," "[t]his external token [being] the claimed external PDK." Pet. 56 (citing Ex. 1003 ¶ 100). Further, Petitioner contends that "the integrated PDK communicates with an external RDC to enable a wide variety of applications/functions/services," wherein

> service may enable an access device to, for example, read or write data in a data memory, access encrypted data, use cryptographic keys, gain access to cryptographic material such as security association and keys, access a web page, access a data network or access a processing application.

*Id.* at 60 (quoting Ex. 1007 ¶ 120).



APPLE EXHIBIT 1042
APPLE v. PROXENSE
IPR2024-00782

Patent Owner repeats the contention that "this element is a message comprising information from a service block of a PDK unlocked prior to transmission with an access key provided by the application, function, or service to be enabled." Prelim. Resp. 17. Thus, although Patent Owner acknowledges that "Broadcom teaches sending messages containing credential information from a token activated by proximity," Patent Owner contends that, "as the message is the result of the token being powered by an RF signal, the first message lacks information unlocked prior to transmission with an access key provided by the service to be enabled." *Id.* at 18. Patent Owner also contends that "no key is used to unlock information prior to transmission." *Id.*

We find Patent Owner's arguments unavailing, because Patent Owner is again relying on a claim construction of "PDK" as requiring "a service block unlocked by an access key." Prelim. Resp. 17. As discussed above, an interpretation requiring "information from a service block of a PDK unlocked prior to transmission with an access key provided by the application, function, or service to be enabled," as Patent Owner asserts (*id.* at 12–13), does not comport with the aforementioned construction. Thus, we are unpersuaded by Patent Owner's contention that the "enabling" limitation "is a message comprising information from a service block of a PDK unlocked prior to transmission with an access key provided by the application, function, or service to be enabled." *Id.* at 17.

Here, Petitioner relies on Broadcom's wireless proximity reader as encompassing a "hybrid device" that includes "an integrated RDC," wherein the wireless proximity reader communicates with an external token, i.e., "the claimed external PDK," seeking access to a service. Pet. 56 (citing Ex. 1003



APPLE EXHIBIT 1042
APPLE v. PROXENSE
IPR2024-00782

¶ 100). As Petitioner contends, "the integrated PDK communicates with an external RDC to enable a wide variety of applications/functions/services." *Id.* at 60 (quoting Ex. 1007 ¶ 120).

As discussed above, we disagree with Patent Owner's contention that the "enabling" limitation "is a message comprising information from a service block of a PDK unlocked prior to transmission with an access key provided by the application, function, or service to be enabled." Prelim. Resp. 17. Instead, as Patent Owner acknowledges, Broadcom teaches sending messages containing credential information for access to a service (*id.* at 18), and thus, we agree with Petitioner's reliance on Broadcom's communication "from the integrated PDK to the external RDC" to teach "enabling" of an application, a function, or a service to be accessed. Pet. 60 (citing Ex. 1007 ¶ 120).

On this preliminary record, we are persuaded that Petitioner has made a sufficient showing that Broadcom teaches "at least one or more of the integrated RDC and integrated PDK enabling one or more of an application, function, and service," as recited in claim 1.

*iii. Remaining limitations of claim 1, and claims 2–7, 9–15, 17, and 18*

Petitioner provides detailed explanations as to how Broadcom teaches the remaining claim limitations as recited in independent claim 1, independent claim 10 reciting similar limitations, and claims 2–7, 9, 11–15, 17, and 18 depending respectively therefrom, citing Dr. Wolfe's testimony for support. Pet. 57–67 (citing Ex. 1007 ¶¶ 8, 114, 116, 130, 195, 198–199, 204, Figs. 1, 3; Ex. 1003 ¶¶ 101–103, 107– 128). At this stage in the proceeding, Patent Owner does not address separately Petitioner's



APPLE EXHIBIT 1042
APPLE v. PROXENSE
IPR2024-00782

explanations and supporting evidence regarding the remaining limitations in claim 1 and claims 2–7, 9–15, 17, and 18. *See* generally Prelim. Resp.

Having reviewed Petitioner's arguments and supporting evidence in the present record, we determine Petitioner has demonstrated a reasonable likelihood that it will prevail on its assertion that independent claim 1, independent claim 10 reciting similar limitations, and claims 2–7, 9, 11–15, 17, and 18 depending respectively therefrom, would have been obvious over Broadcom.

*iv. Claims 8, 16, 19, and 20 over Broadcom and Giobbi '157*

Petitioner provides detailed explanations as to how the combination of Broadcom and Giobbi '157 teaches the limitations as recited in claims 8, 16, 19, and 20, citing Dr. Wolfe's testimony for support. Pet. 67–68 (citing Ex. 1007 ¶ 130; Ex. 1003 ¶¶ 129–133).

At this stage in the proceeding, Patent Owner does not address separately Petitioner's explanations and supporting evidence regarding claims 8, 16, 19, and 20, but merely contends that "[t]his ground is directed to claims that depend upon independent claims 1 and 10," wherein "because elements of the independent claims are not met," the Petition "fails to establish that Broadcom or Giobbi '157 or a combination thereof invalidate dependent claims 8, 16, 19, and 10." *See* Prelim. Resp. 20

Having reviewed Petitioner's arguments and supporting evidence in the present record, we determine Petitioner has demonstrated a reasonable likelihood that it will prevail on its assertion that claims 8, 16, 19, and 20 would have been obvious over Broadcom in further view of Giobbi '157.



APPLE EXHIBIT 1042
APPLE v. PROXENSE
IPR2024-00782

## III. CONCLUSION

Because we determine that Petitioner has demonstrated a reasonable likelihood that it would prevail in showing at least one of the challenged claims is unpatentable, we institute *inter partes* review as to all challenged claims and grounds presented in the Petition. 37 C.F.R. § 42.108(a) (2020). At this stage of the proceeding, we have not made a final determination as to the patentability of any of these challenged claims.

## IV. ORDER

For the reasons given, it is

ORDERED that pursuant to 35 U.S.C. § 314, an *inter partes* review is instituted as to claims 1–20 of the '188 patent to determine whether:

1) claims 1–20 are unpatentable under 35 U.S.C. § 103 as obvious over Giobbi '157, Giobbi '139, and Dua;

2) claims 1–7, 9–15, 17, and 18 are unpatentable under 35 U.S.C. § 103 as obvious over Broadcom;

3) claims 8, 16, 19, and 20 are unpatentable under 35 U.S.C. § 103 as obvious over Broadcom and Giobbi '157; and

FURTHER ORDERED that pursuant to 35 U.S.C. § 314(c) and 37 C.F.R. § 42.4, notice is hereby given of the institution of a trial, which commences on the entry date of this Decision.



APPLE EXHIBIT 1042
APPLE v. PROXENSE
IPR2024-00782

For PETITIONER:

James Glass
Marissa Ducca
Sean Gloth
QUINN EMANUEL URQUHART & SULLIVAN, LLP
jimglass@quinnemanuel.com
marissaducca@quinnemanuel.com
seangloth@quinnemanuel.com

For PATENT OWNER:

David Hecht
HECHT PARTNERS LLP
dhecht@hechtpartners.com



APPLE EXHIBIT 1042
APPLE v. PROXENSE
IPR2024-00782