US 20040176032A1

(19) United States

(12) Patent Application Publication

(10) Pub. No.: US 2004/0176032 A1

(43) Pub. Date: Sep. 9, 2004

Kotola et al.

(54) RADIO FREQUENCY IDENTIFICATION (RF-ID) BASED DISCOVERY FOR SHORT RANGE RADIO COMMUNICATION WITH READER DEVICE HAVING TRANSPONDER FUNCTIONALITY

(76) Inventors: **Sakari Kotola**, Espoo (FI); **Holger Hussmann**, Tampere (FI)

Correspondence Address:
**MORGAN & FINNEGAN, L.L.P.**
**345 Park Avenue**
**New York, NY 10154-0053 (US)**

(21) Appl. No.: **10/804,081**

(22) Filed: **Mar. 19, 2004**

**Related U.S. Application Data**

(63) Continuation-in-part of application No. 10/105,320, filed on Mar. 26, 2002.

**Publication Classification**

(51) **Int. Cl.**[7] ..... **H04Q 5/22**; H04B 7/24

(52) **U.S. Cl.** ..... **455/41.2**; 455/39

(57) **ABSTRACT**

A RF-ID based wireless terminal includes a reader device with transponder functionality implementing ECMA 340 standard for near field communication and has shortened session set-up and user identification. The reader device is operable in an active communication mode or a passive communication mode. During the active mode, one RF-ID tag reader simulates a RF-ID tag while the other simulates a RF-ID tag reader. The reader includes a transponder, which operates during periods of time when the reader is not energized. A radio frequency interface provides signal for operation of the reader in the reader operation mode or transponder mode of operation. An RF-ID reader upon receiving a response signal from a semi-passive or active RF-ID tag of reader emulating a tag informs the terminal CPU which instructs the short-range communication to enter e.g. a page scanning mode which shortens session set-up time and user identification.

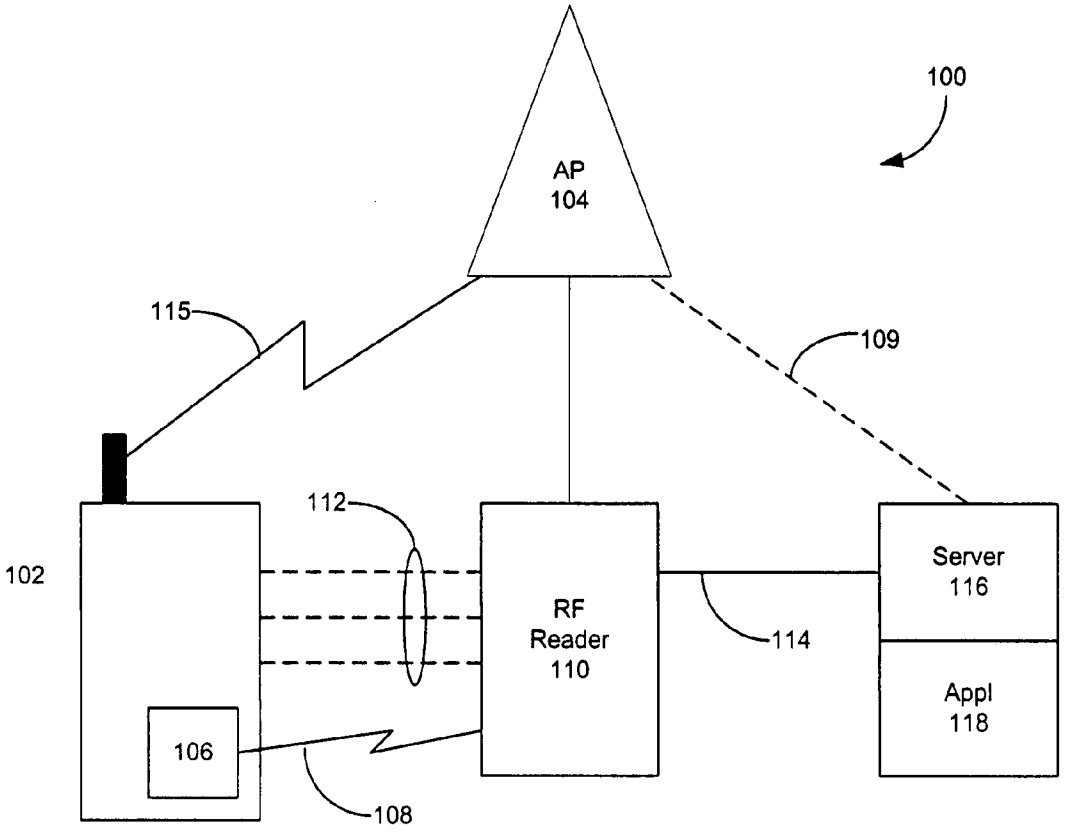




GOOGLE EXHIBIT 1017

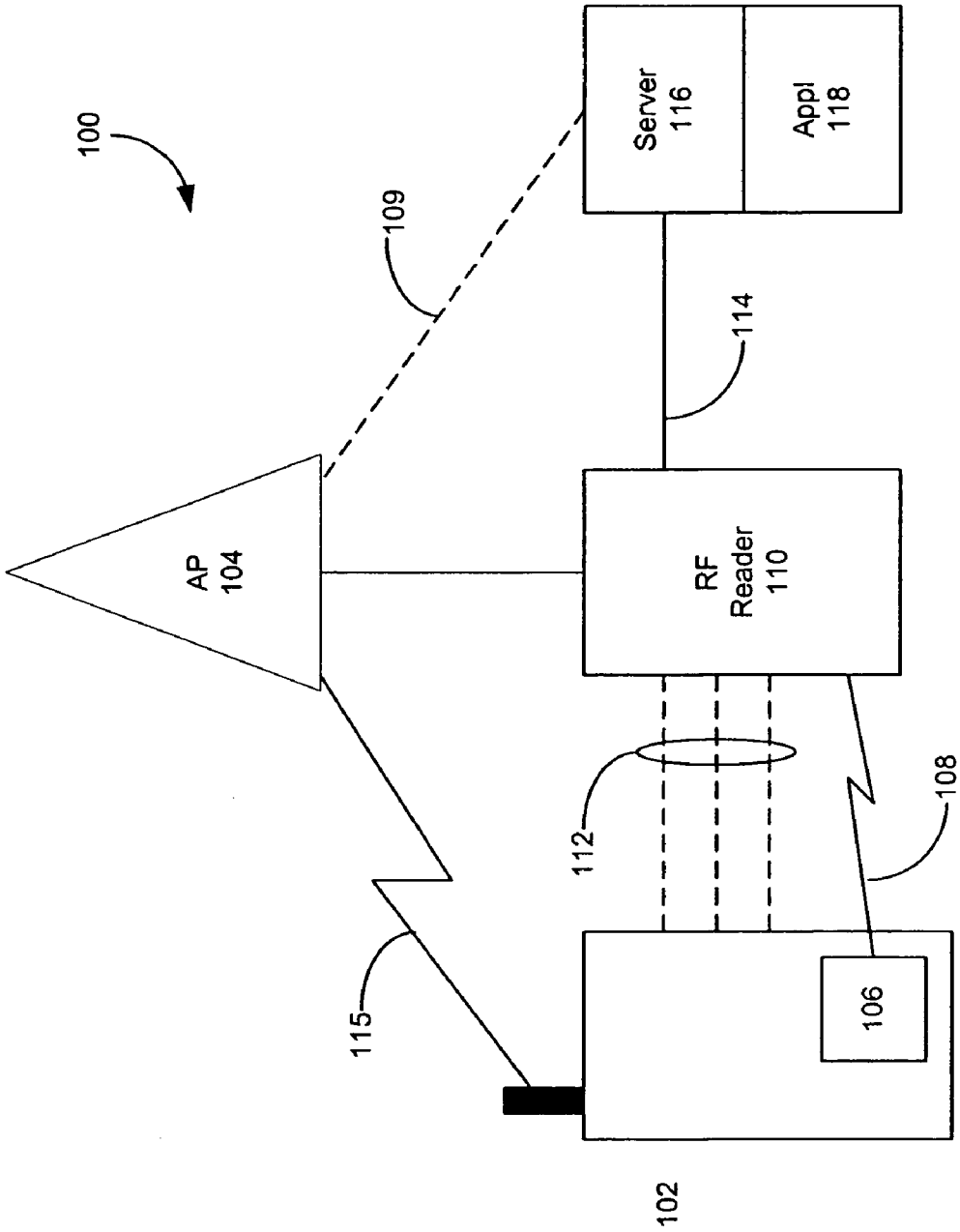
100
109
Server
116
Appl
118
114
AP
104
RF
Reader
110
112
108
115
106
102

FIG. 1

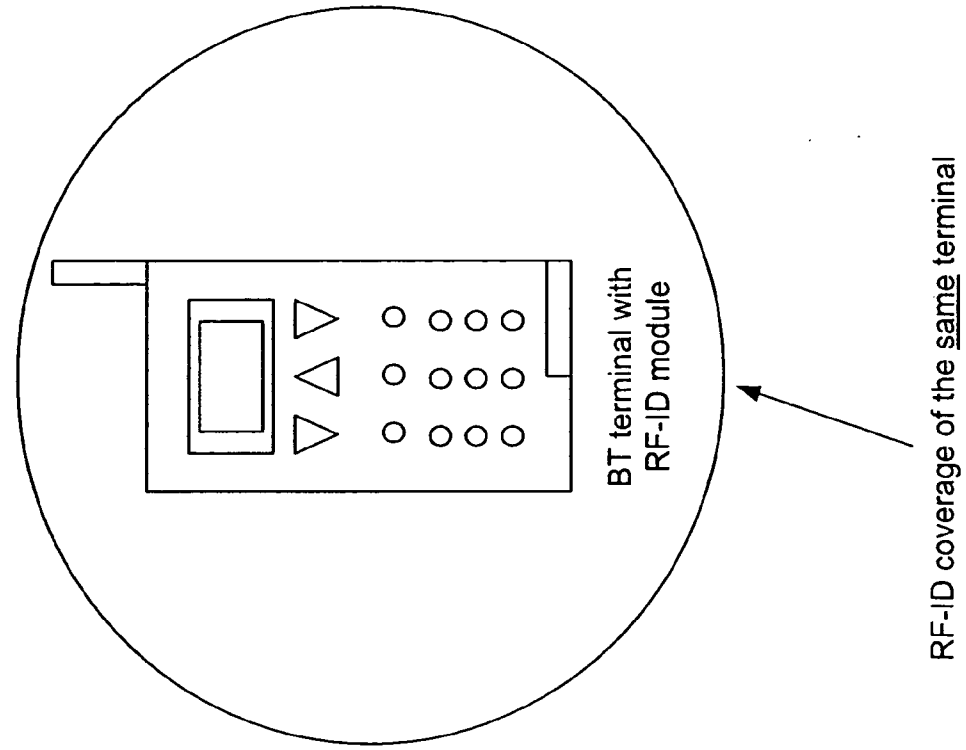
BT terminal with
RF-ID module
RF-ID coverage of the same terminal

FIG. 1B

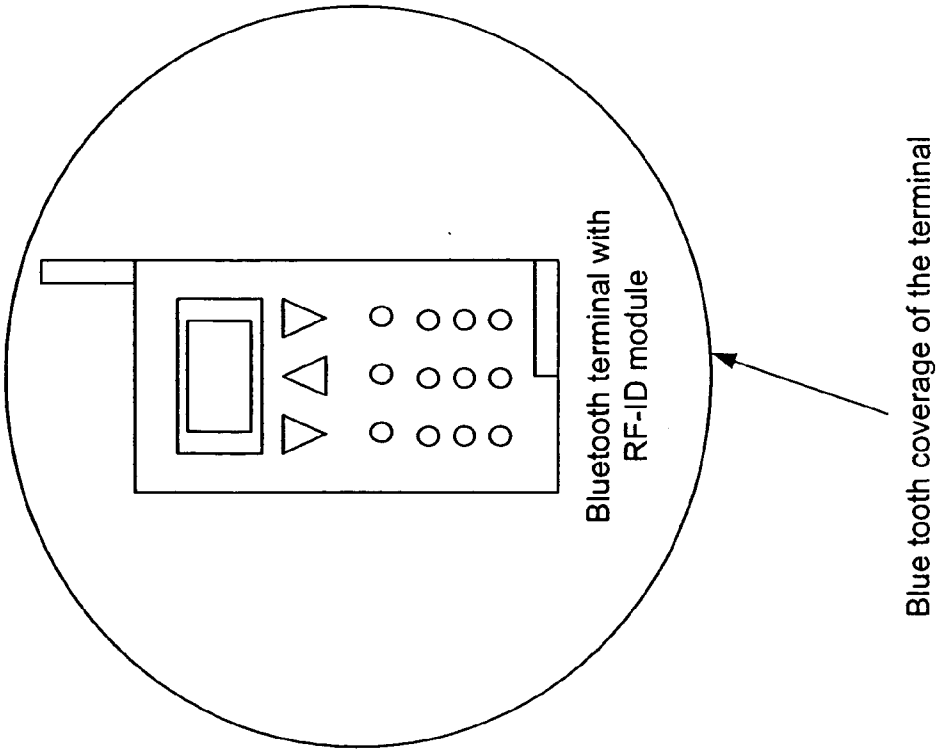
Bluetooth terminal with
RF-ID module
Blue tooth coverage of the terminal

FIG. 1A

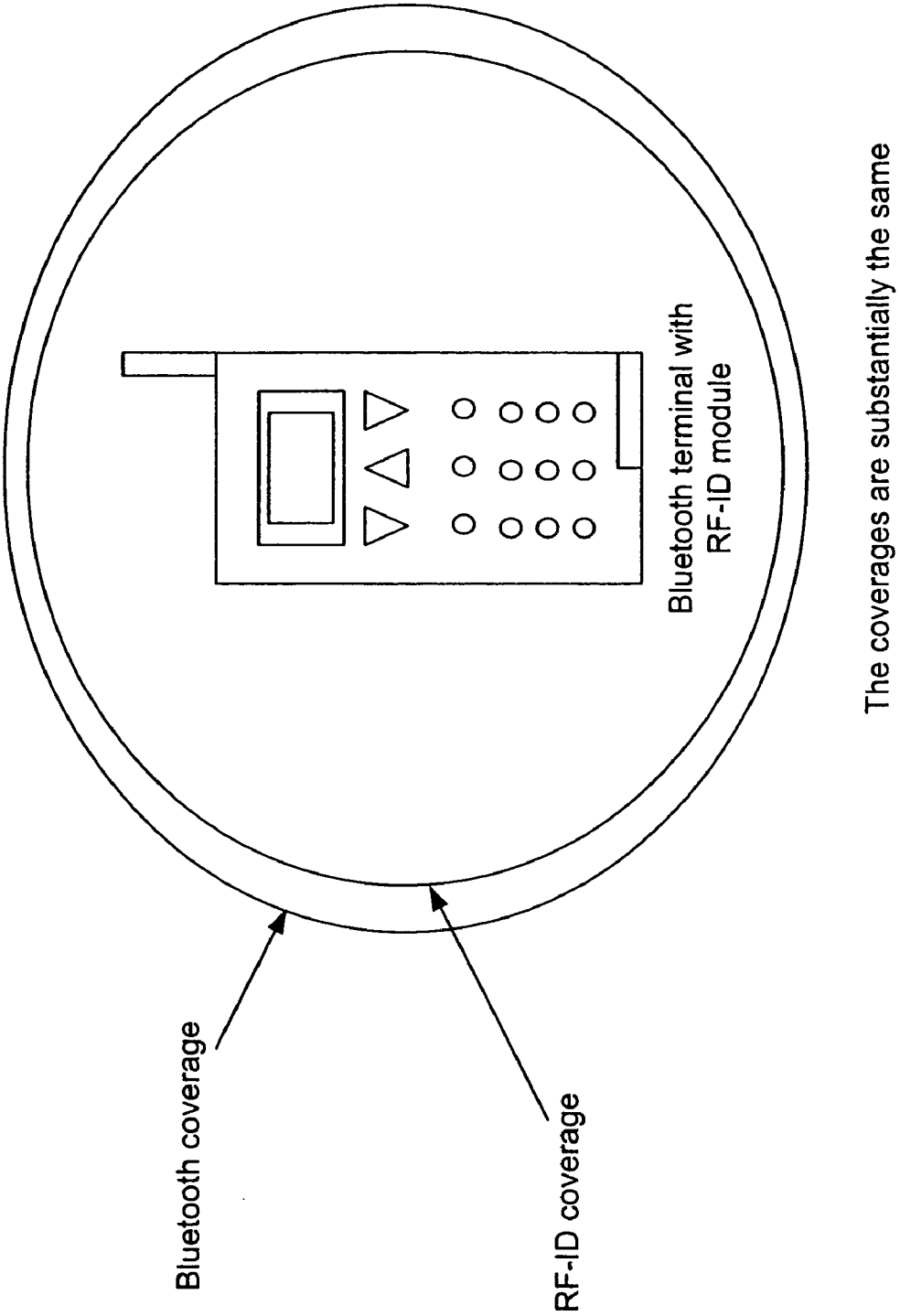
Bluetooth coverage
RF-ID coverage
Bluetooth terminal with
RF-ID module
The coverages are substantially the same

FIG. 1C

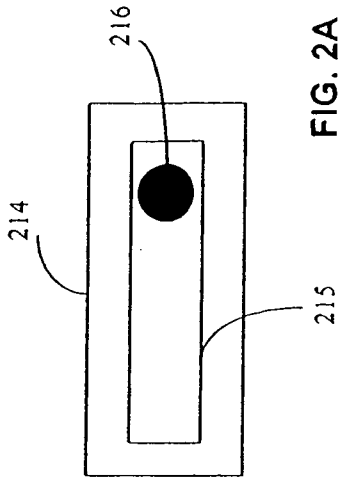
214
216
215

FIG. 2A

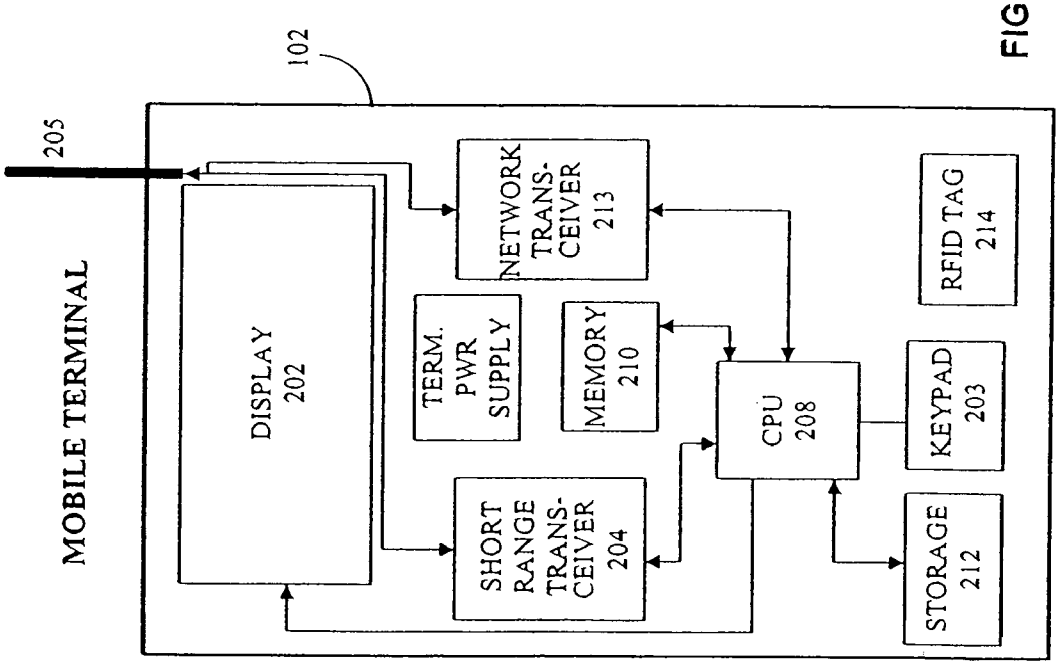
MOBILE TERMINAL
205
102
DISPLAY 202
NETWORK TRANS-CEIVER 213
TERM. PWR SUPPLY
MEMORY 210
CPU 208
RFID TAG 214
KEYPAD 203
SHORT RANGE TRANS-CEIVER 204
STORAGE 212

FIG. 2

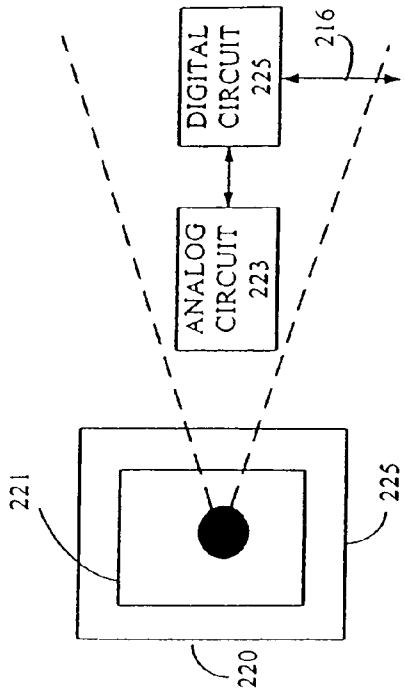
DIGITAL CIRCUIT 225
216
ANALOG CIRCUIT 223
221
225
220

FIG. 3A

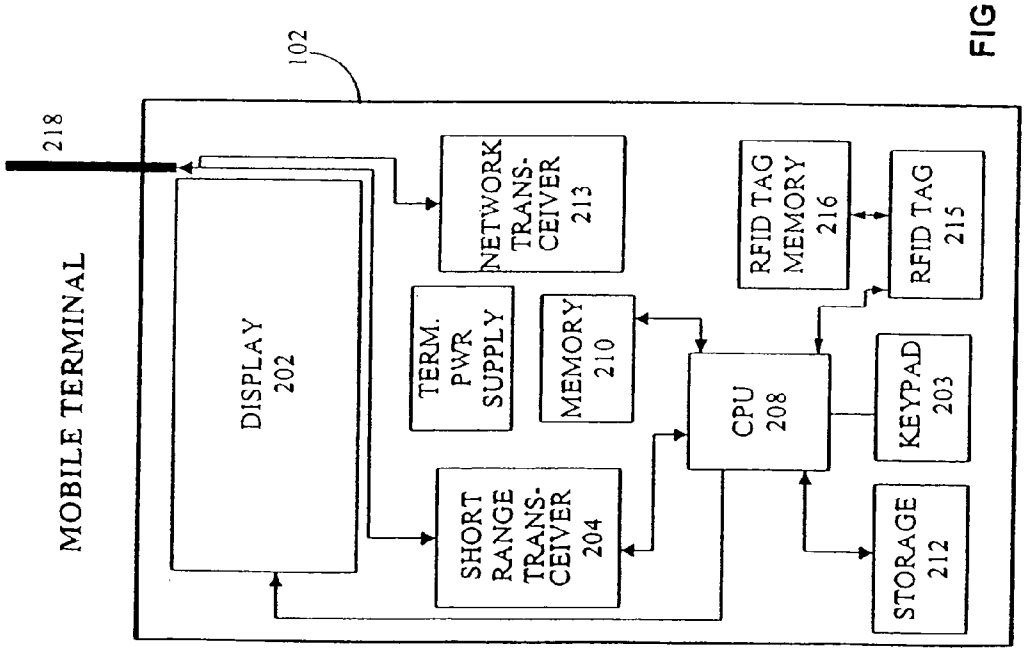
MOBILE TERMINAL
218
102
DISPLAY 202
NETWORK TRANS-CEIVER 213
TERM. PWR SUPPLY
MEMORY 210
SHORT RANGE TRANS-CEIVER 204
CPU 208
RFID TAG MEMORY 216
RFID TAG 215
KEYPAD 203
STORAGE 212

FIG. 3

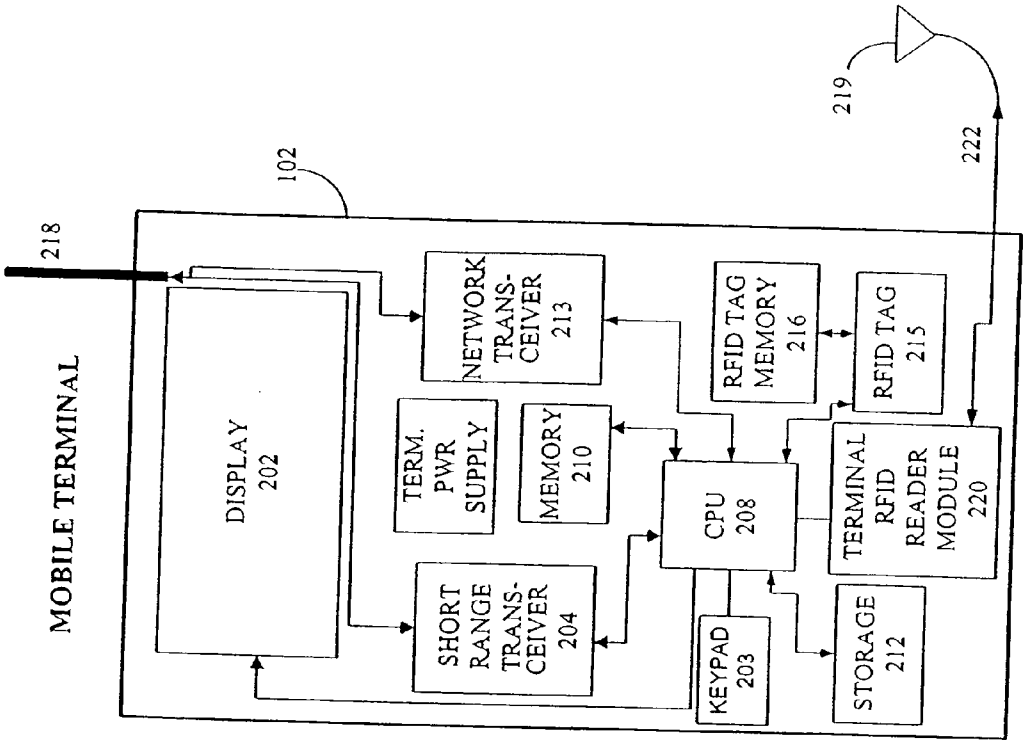
MOBILE TERMINAL
218
102
DISPLAY 202
NETWORK TRANS-CEIVER 213
TERM. PWR SUPPLY
MEMORY 210
SHORT RANGE TRANS-CEIVER 204
CPU 208
KEYPAD 203
RFID TAG MEMORY 216
RFID TAG 215
TERMINAL RFID READER MODULE 220
STORAGE 212
219
222

FIG. 4

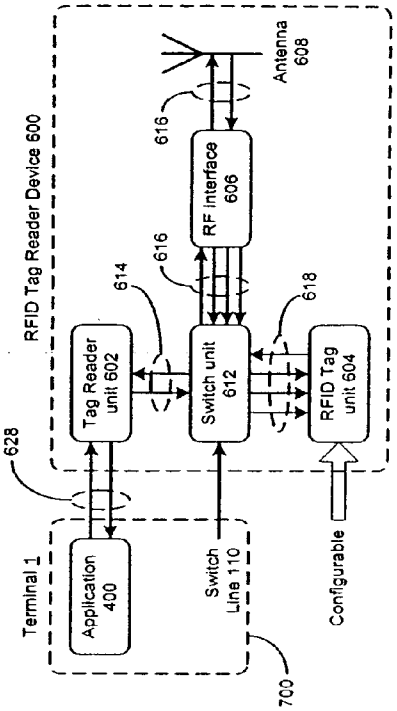


FIG. 5A

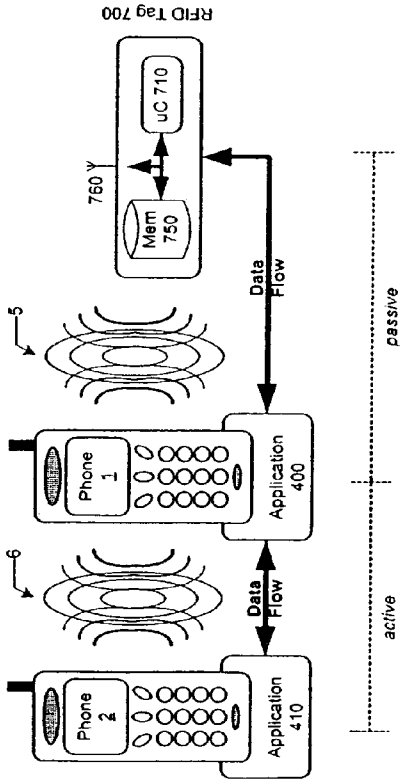


FIG. 5
(State of the Art)

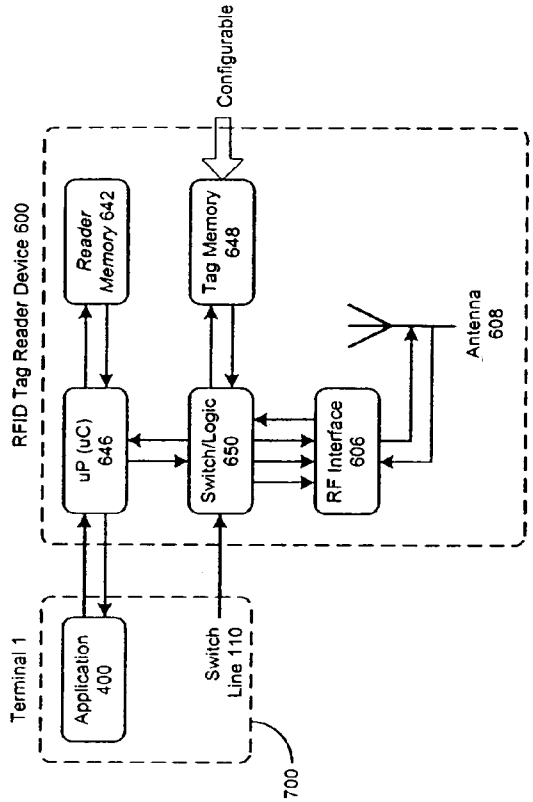
Configurable
RFID Tag Reader Device 600
Reader Memory 642
Tag Memory 648
Antenna 608
uP (uC) 646
Switch/Logic 650
RF Interface 606
Terminal 1
Application 400
Switch Line 110
700

FIG. 5C

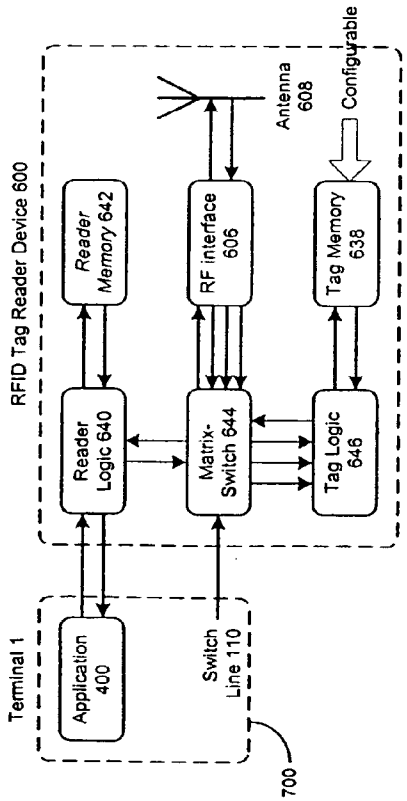
Configurable
RFID Tag Reader Device 600
Antenna 608
Reader Memory 642
RF interface 606
Tag Memory 638
Reader Logic 640
Matrix-Switch 644
Tag Logic 646
Terminal 1
Application 400
Switch Line 110
700

FIG. 5B

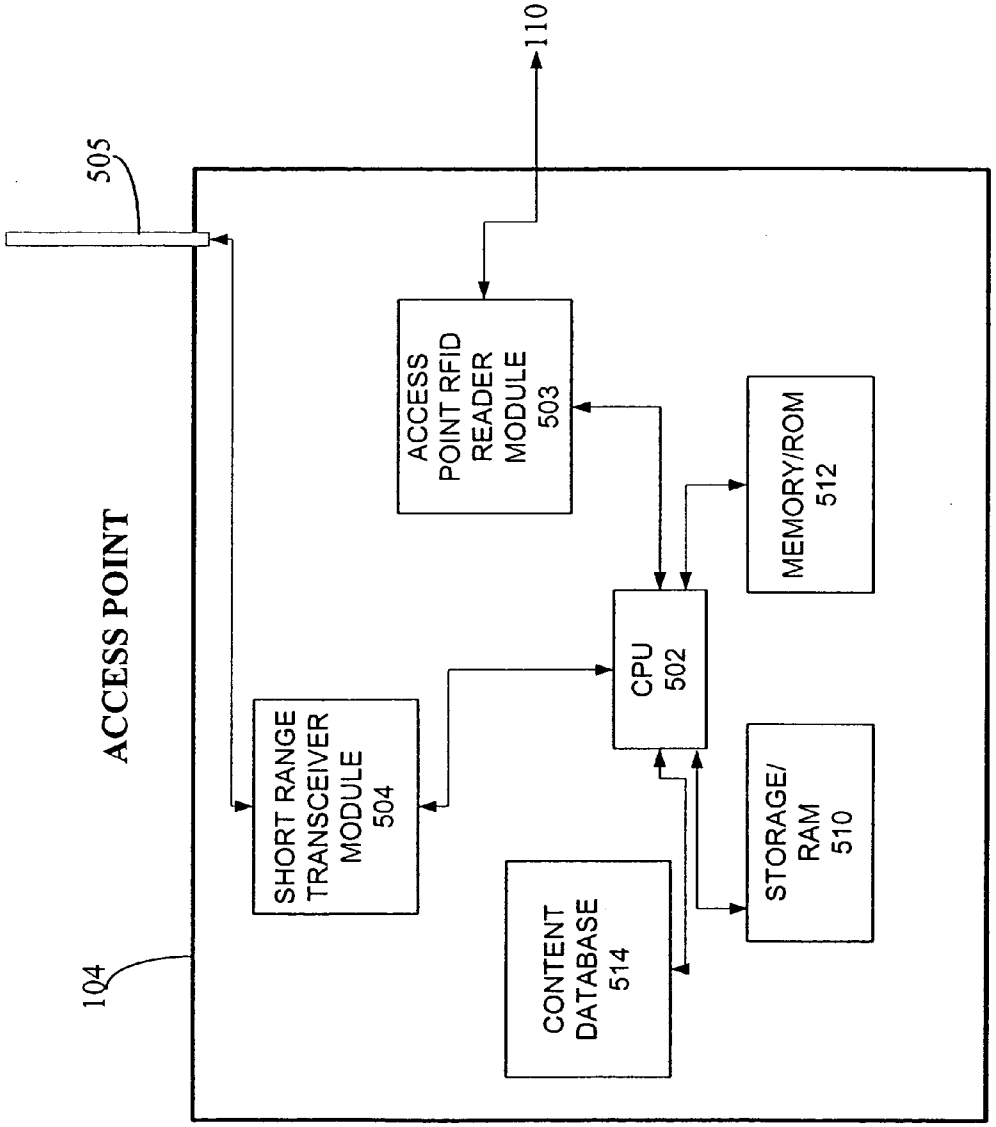
ACCESS POINT
505
110
104
SHORT RANGE TRANSCEIVER MODULE 504
ACCESS POINT RFID READER MODULE 503
CPU 502
MEMORY/ROM 512
CONTENT DATABASE 514
STORAGE/ RAM 510

FIG. 6

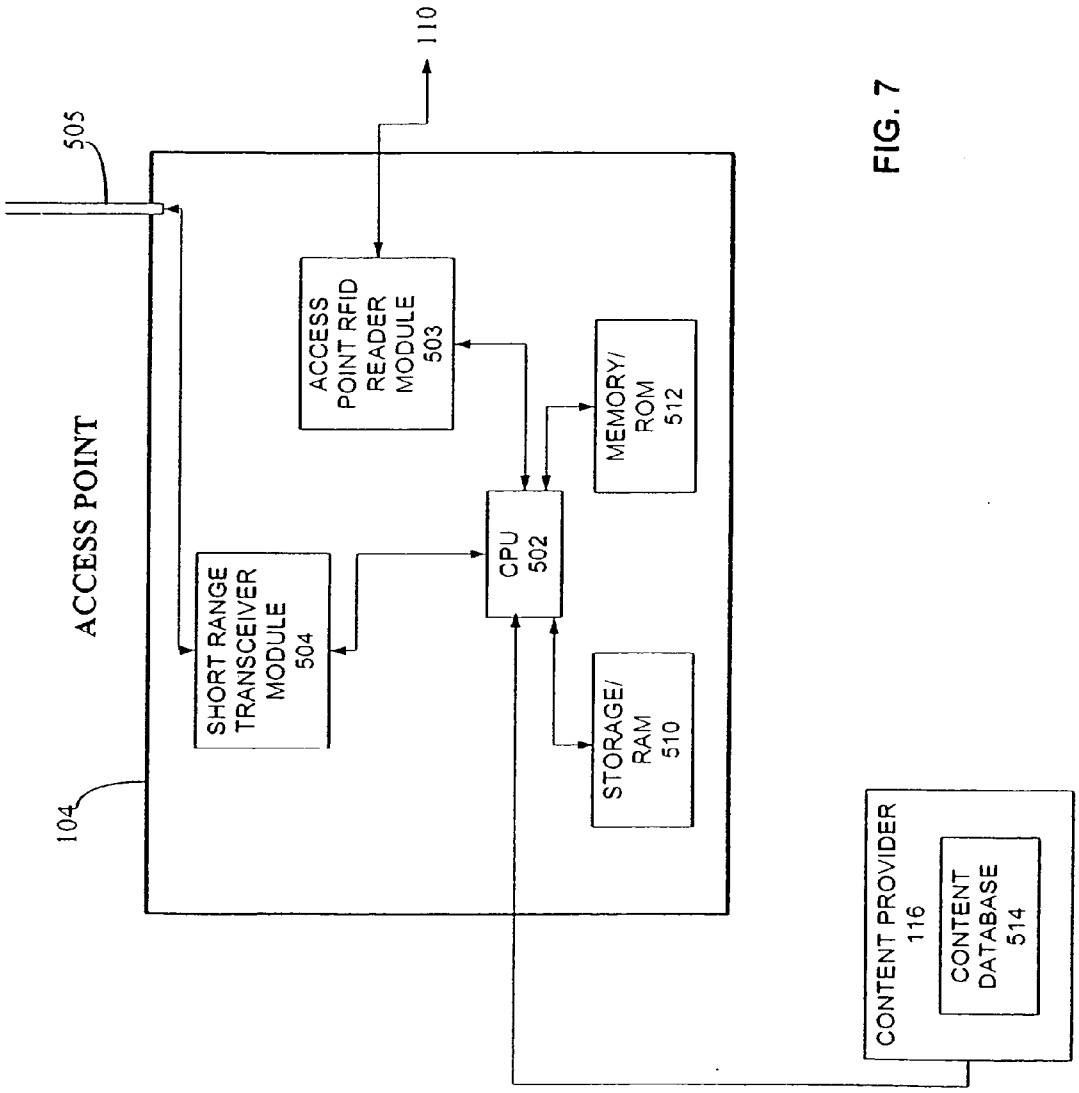
110
505
ACCESS POINT
104
ACCESS POINT RFID READER MODULE 503
SHORT RANGE TRANSCEIVER MODULE 504
CPU 502
MEMORY/ ROM 512
STORAGE/ RAM 510
CONTENT PROVIDER 116
CONTENT DATABASE 514

FIG. 7

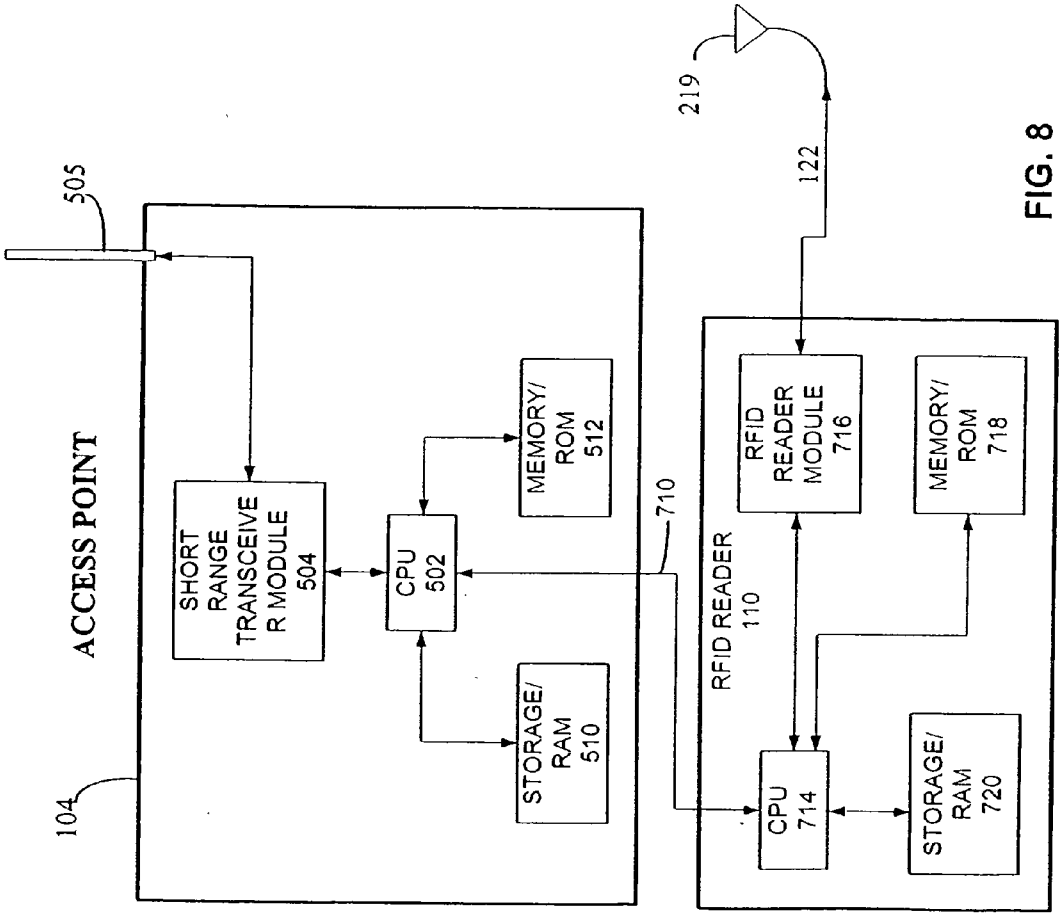
ACCESS POINT
505
104
SHORT RANGE TRANSCEIVE R MODULE 504
CPU 502
MEMORY/ ROM 512
STORAGE/ RAM 510
710
219
122
RFID READER 110
RFID READER MODULE 716
MEMORY/ ROM 718
CPU 714
STORAGE/ RAM 720

FIG. 8

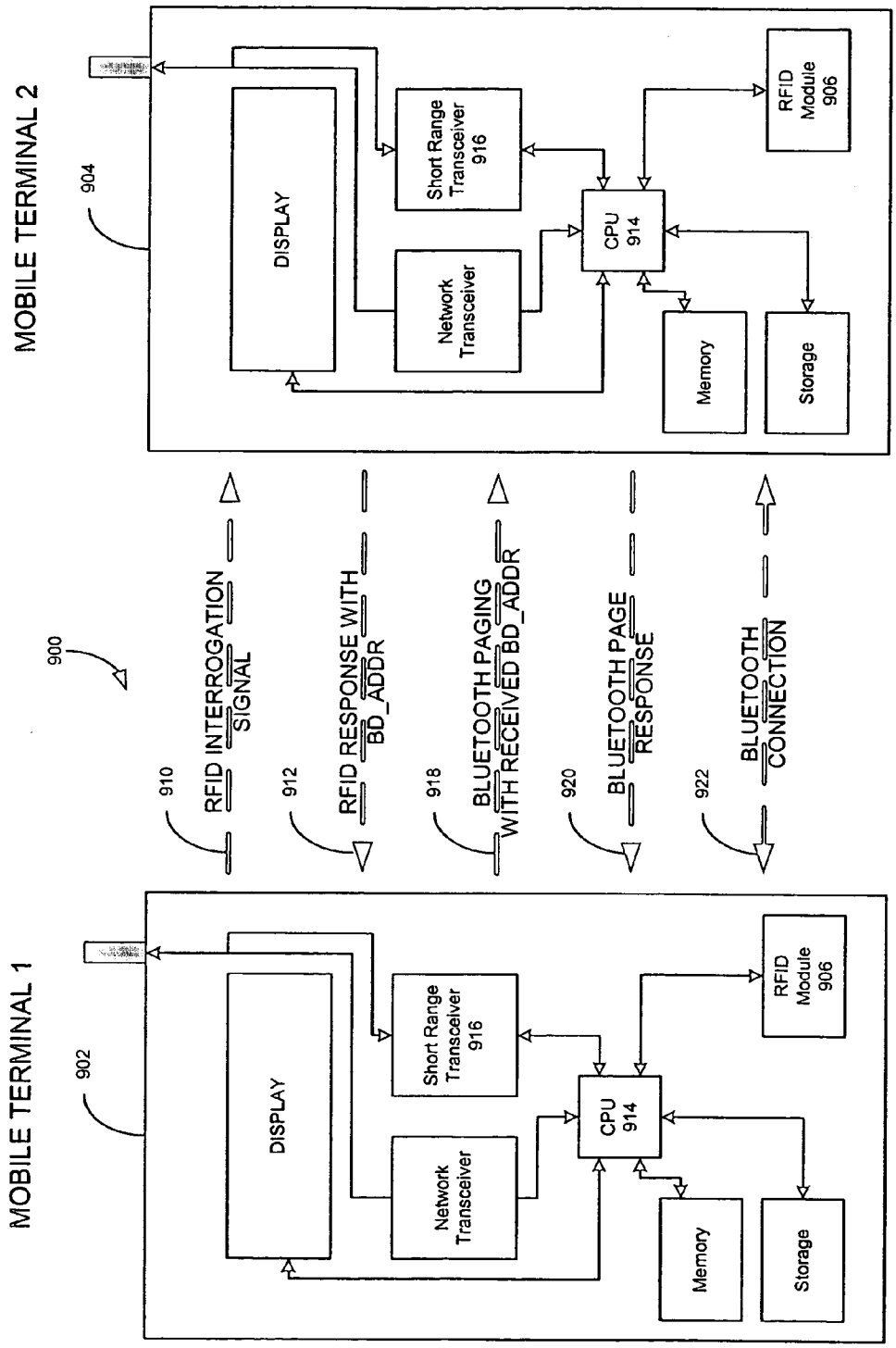
MOBILE TERMINAL 2
904
DISPLAY
Short Range Transceiver 916
Network Transceiver
CPU 914
RFID Module 906
Memory
Storage
900
910
RFID INTERROGATION SIGNAL
912
RFID RESPONSE WITH BD_ADDR
918
BLUETOOTH PAGING WITH RECEIVED BD_ADDR
920
BLUETOOTH PAGE RESPONSE
922
BLUETOOTH CONNECTION
MOBILE TERMINAL 1
902
DISPLAY
Short Range Transceiver 916
Network Transceiver
CPU 914
RFID Module 906
Memory
Storage

FIG. 9

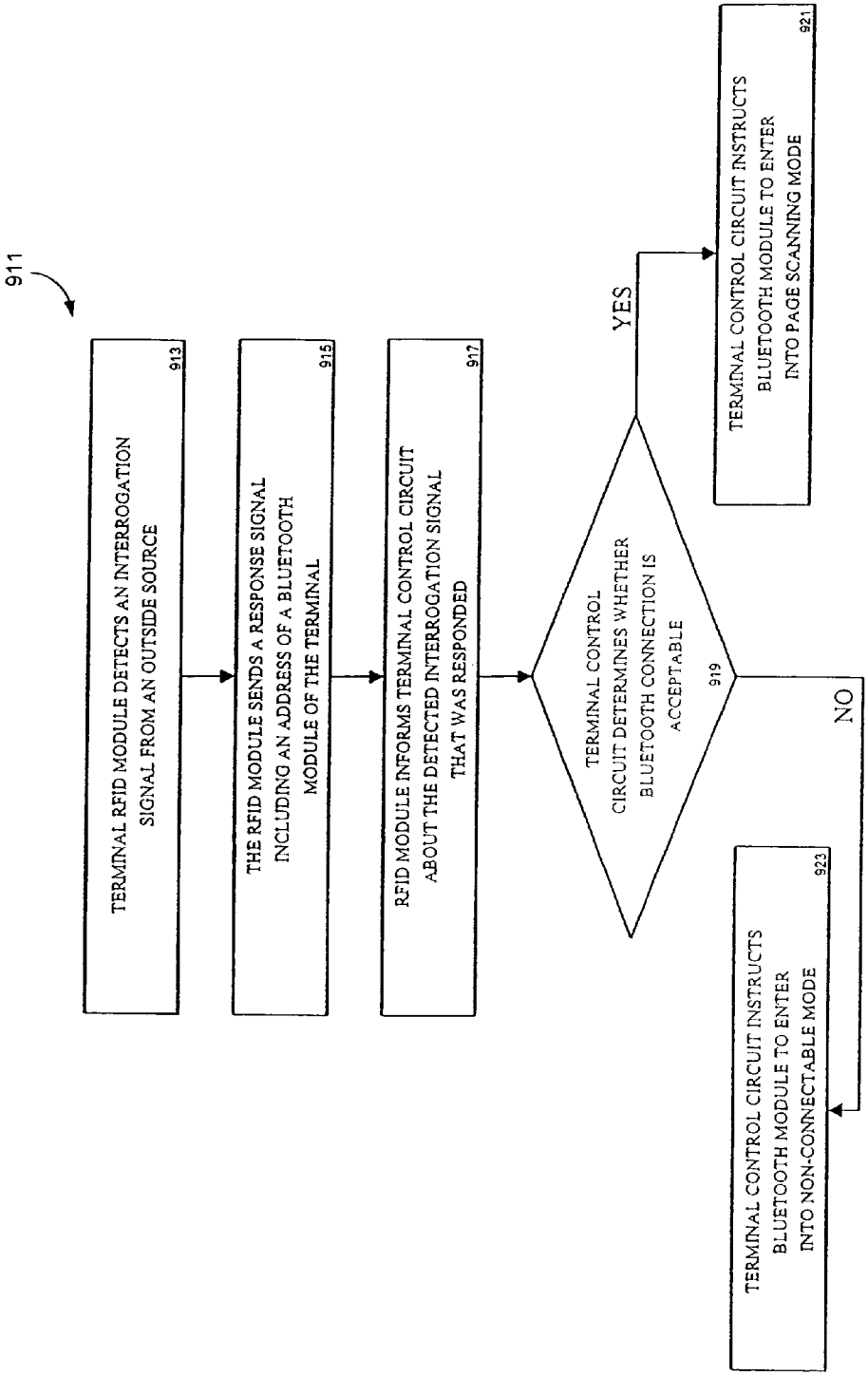
911
TERMINAL RFID MODULE DETECTS AN INTERROGATION SIGNAL FROM AN OUTSIDE SOURCE
913
THE RFID MODULE SENDS A RESPONSE SIGNAL INCLUDING AN ADDRESS OF A BLUETOOTH MODULE OF THE TERMINAL
915
RFID MODULE INFORMS TERMINAL CONTROL CIRCUIT ABOUT THE DETECTED INTERROGATION SIGNAL THAT WAS RESPONDED
917
TERMINAL CONTROL CIRCUIT DETERMINES WHETHER BLUETOOTH CONNECTION IS ACCEPTABLE
919
YES
NO
TERMINAL CONTROL CIRCUIT INSTRUCTS BLUETOOTH MODULE TO ENTER INTO PAGE SCANNING MODE
921
TERMINAL CONTROL CIRCUIT INSTRUCTS BLUETOOTH MODULE TO ENTER INTO NON-CONNECTABLE MODE
923

FIG. 9A

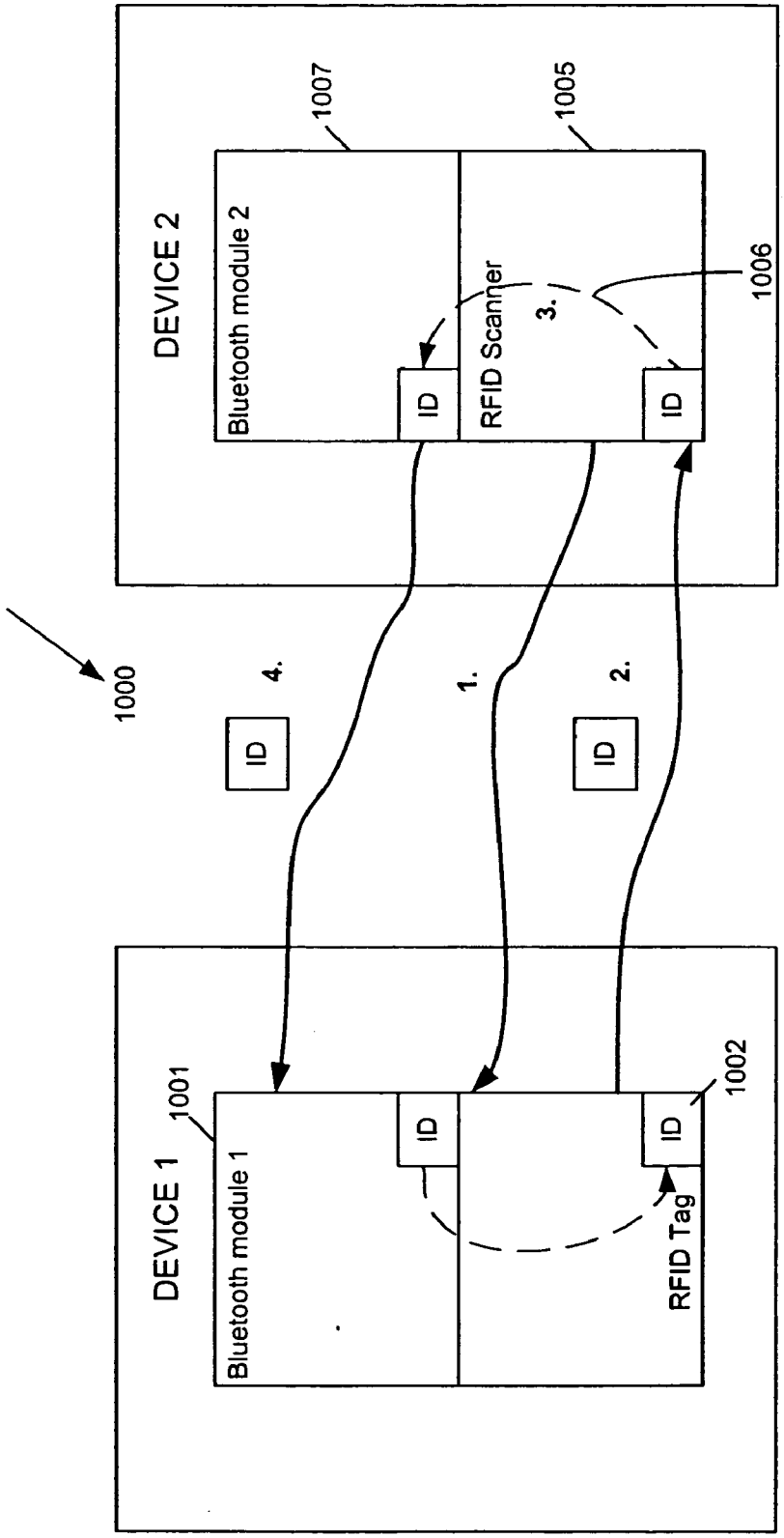
1000
DEVICE 1
1001
Bluetooth module 1
ID
ID
RFID Tag
1002
DEVICE 2
Bluetooth module 2
1007
ID
RFID Scanner
1005
ID
1006
1.
2.
3.
4.
ID
ID

FIG. 10

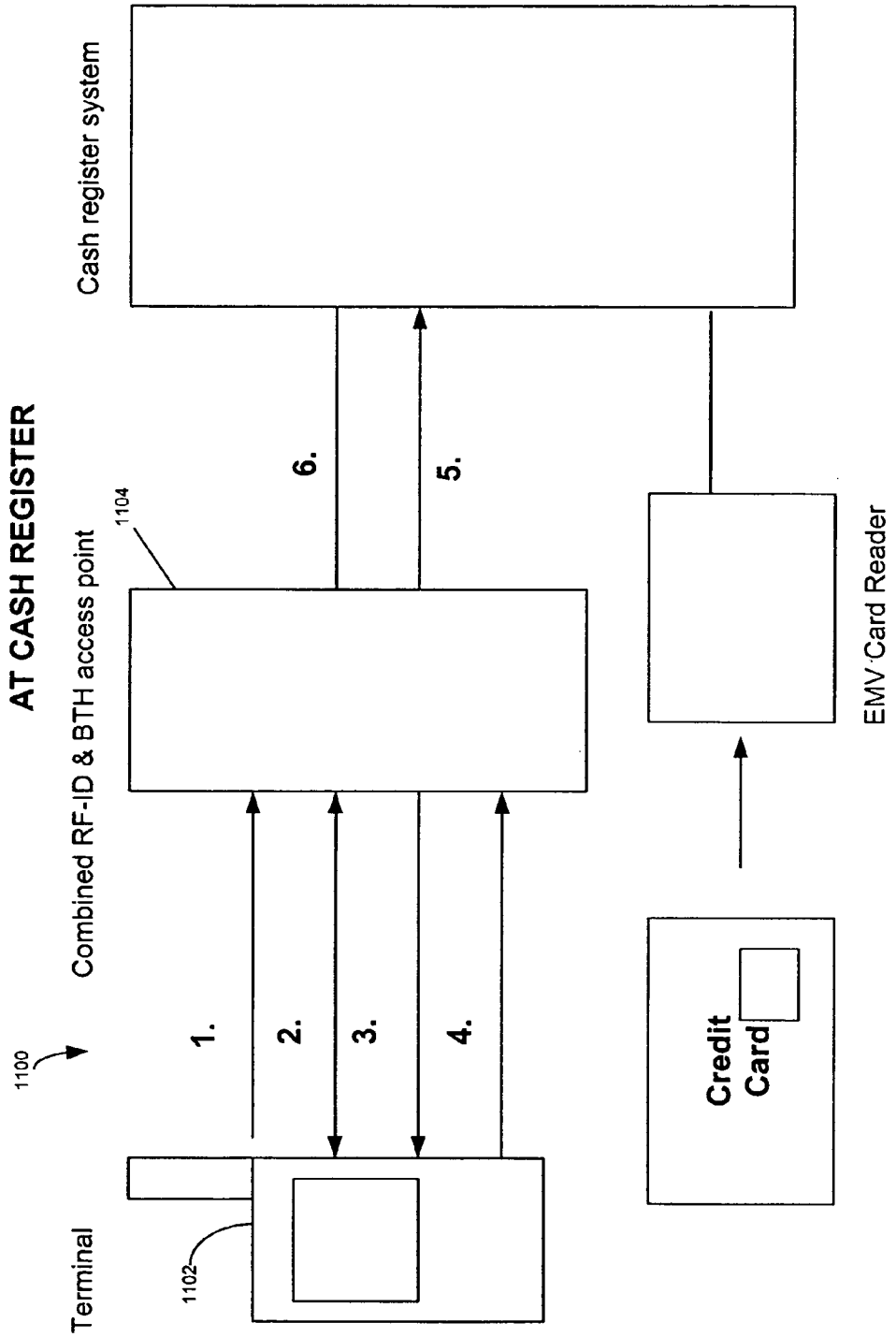
AT CASH REGISTER
1100
Terminal
1102
Combined RF-ID & BTH access point
1104
1.
2.
3.
4.
5.
6.
Cash register system
Credit Card
EMV Card Reader

FIG. 11

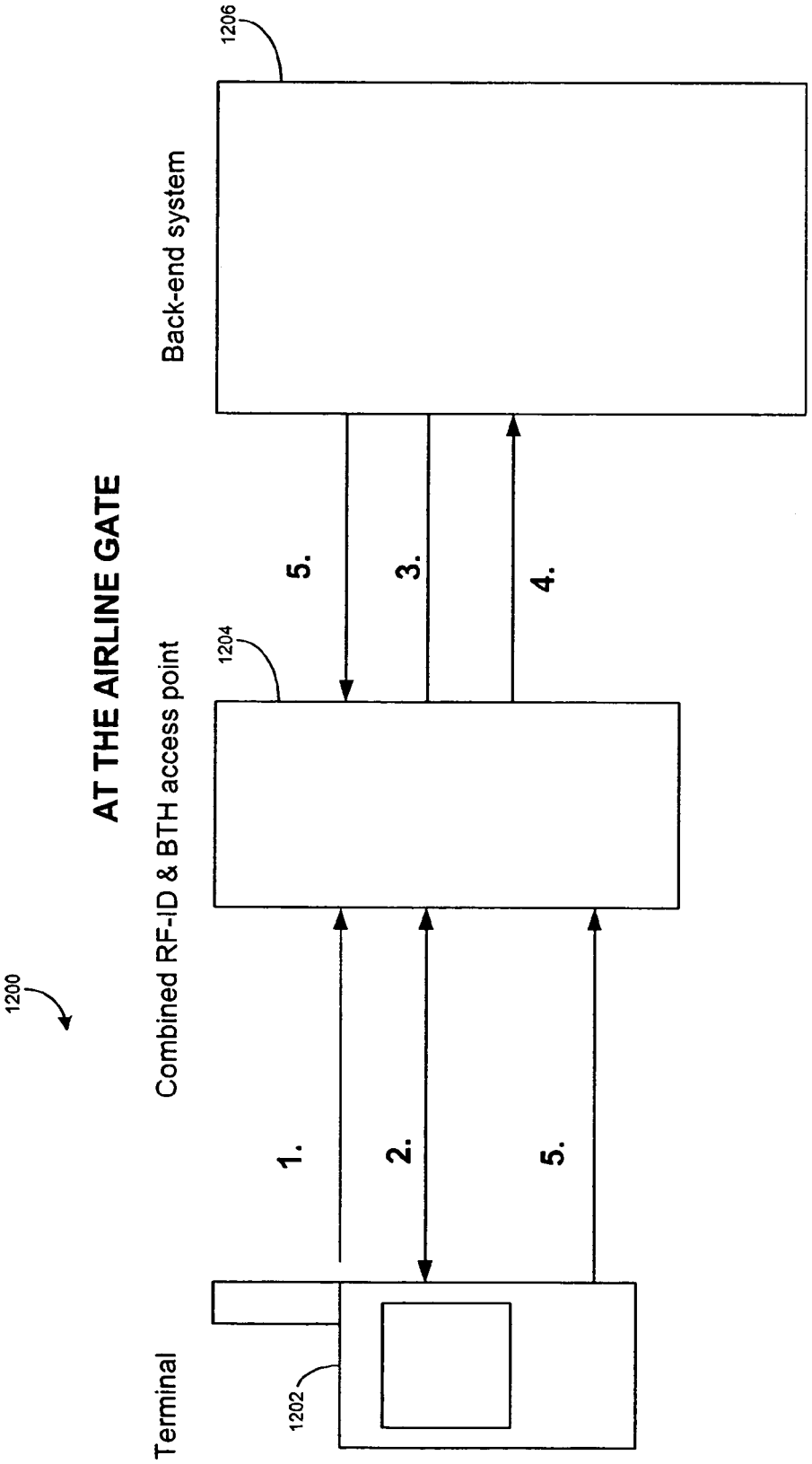
1200
AT THE AIRLINE GATE
Terminal
1202
Combined RF-ID & BTH access point
1204
Back-end system
1206
1.
2.
5.
3.
4.
5.

FIG. 12

# RADIO FREQUENCY IDENTIFICATION (RF-ID) BASED DISCOVERY FOR SHORT RANGE RADIO COMMUNICATION WITH READER DEVICE HAVING TRANSPONDER FUNCTIONALITY

[0001] This Application is a continuation-in-part of U.S. patent application Ser. No. 10/105,320, filed Mar. 26, 2002 entitled "Radio Frequency Identification (RF-ID) Based Discovery For Short-Range Radio Communication", and assigned to Nokia Corporation of Keilalahdentie 4, 02150 Espoo, FINLAND.

## BACKGROUND OF INVENTION

[0002] 1. Field of Invention:

[0003] This invention relates to short range communication devices, processes and systems. More particularly, the invention relates to short range communication devices, processes and systems utilizing radio frequency identification systems with shorter user identification and session setup time in interactive services, and a reader device with transponder functionality.

[0004] 2. Description of Prior Art

[0005] Bluetooth$^{R}$ is a short-range wireless communication system operating at 2.4 GHz and designed to establish connection between two or more devices operating within a ten-meter communication range, for nominal output power, but can be extended up to 100 meters for 100 mW-output power. The details of Bluetooth are described in "The Bluetooth Special Interest Group, Specification Of The Bluetooth System, Volumes 1 and 2, Core and Profiles: Version 1.1, 22nd Feb., 2001, which are fully incorporated herein by reference. To discover another Bluetooth terminal, an inquiry message is transmitted searching for other devices in the vicinity. Any other Bluetooth terminal that is listening by means of conducting an inquiry scan, will recognize the inquiry message and respond. The inquiry response is a message packet containing the responding devices Bluetooth terminal Address (BD_ADDR). The Bluetooth terminal address is a unique, 48-bit IEEE address, which is electronically engraved into each Bluetooth terminal. The address is virtually guaranteed to be completely unique, so much so that it can be reliably associated with the device's user, much as can the user's passport number or social security number. One of the problems of Bluetooth terminals is the long time required for discovery of a Bluetooth terminal, which can be up to 10 seconds. In many applications, the device discovery time is too long and restricts the usage of Bluetooth, particularly for interactive services.

[0006] Radio Frequency Identification (RF-ID) is a wireless system that automatically identifies tracks and manages objects via a fast connection between the object and a RF-ID reader. RF-ID principles are described in a publication entitled "Radio Frequency Identification RF-ID: A Basic Primer", published by the Automatic Identification Manufacturers (AIM) web site (http: //www.aimglobal.org), Oct. 23, 2001 and fully incorporated herein by reference. The object includes a transponder, active or passive as a RF-ID tag, which when in the presence of an electromagnetic zone created by the reader broadcasts an object identity signal. The reader senses and decodes the broadcast signal to identify the object. The object identity is achieved by a connectionless communication that is a connection without a logical connection between the reader and the object.

[0007] The rising use of RF-ID tags promotes standardization efforts to establish a broadly applicable communication framework between RF-ID tag readers and RF-ID tags. Such a standard is established by European Computer Manufacturers Association (ECMA) International, Geneva, Switzerland in a near field communication standard (ECMA-340) dated December 2002. The standard defines communication modes for a near field communication interface and protocol (NFCIP-1) to be used for RF-ID tag readers and RF-ID tags. It also defines both passive and active communication modes to realize a communication network using near field communication enabled devices for networked products and also for consumer equipment. The standard specifies, in particular, modulation schemes, codings, transfer speeds, and frame format of a Radio Frequency/High Frequency (RF/HF) interface, as well as initialization schemes and conditions required for data collision control during initialization. Furthermore, the ECMA Standard defines a transport protocol including protocol activation and data exchange methods.

[0008] The aforementioned RF-ID tag reader and RF-ID tag communication is covered in a first approach, as shown in **FIG. 5**, by the passive communication mode between a phone **1** and a RF-ID tag **700**. Correspondingly in a second approach, the active communication mode relates to communications between RF-ID tag readers. The state of the art communication between RF-ID tags readers will be enlightened in view of **FIG. 5**., wherein a second portable terminal **2** is provided which is connected to a RF-ID tag reader. The RF-ID tag reader may be realized as a stand-alone unit which may be detachably connected to the portable terminal **2** or which may be embedded in the portable terminal **2**. Both the RF-ID tag readers of portable terminal **1** and the portable terminal **2** support the active communication mode which means, that the both RF-ID tag readers are adapted to communicate with each other by employing the aforementioned near field communication interface and protocol (NFCIP-1) standard. During active communication mode one of the participating RF-ID tag readers of the portable terminal **1** and portable terminal **2** actively simulates a RF-ID tag whereas the other one actively simulates a RF-ID tag reader. The data communication is established via the wireless communication link **6**, which is a radio and high frequency (RF/HF) communication link, respectively. This wireless communication link **6** provide data flow between the application **400** operated on the portable terminal **1** and an application **410** operated on the portable terminal **410**.

[0009] But in contrast to passive RF-ID tags which are energized by the interrogation signal of the RF-ID tag reader, both participating RF-ID tag readers are always energized independently, i.e. have their own power supply to generate the radio/high frequency (RF/HF) signals used for data communications between those. Therefore, the RF-ID tag reader, which actively simulates a RF-ID tag, may be regarded as an active RF-ID tag.

[0010] Despite the advantages provided by the RF-ID tag readers intercommunication several drawbacks of the aforementioned explanation may be identified. The realization of the RF-ID tag reader—RF-ID tag reader intercommunication requires a great effort in development since the interface

and protocol definitions are sophisticated and show a significantly complex functionality which is of course required to ensure interoperability between RF-ID tag readers of different manufacturers. Moreover, the realization of the RF-ID tag reader—RF-ID tag reader intercommunication requires energy supply to each participating RF-ID tag reader, which can be problematic in view of portable devices, powered by batteries or accumulators. And in certain circumstances the operation of a portable device is not wanted or even forbidden for example in airplanes or in hospitals. Assume a RF-ID tag reader embedded in a cellular telephone wherein the embedded RF-ID tag reader supports RF-ID tag reader—RF-ID tag reader intercommunication and the user of this cellular telephone wants to establish intercommunication with a fixed RF-ID tag reader. Due to the fact that the embedded RF-ID tag reader has to be energized, intercommunication is not possible in these aforementioned circumstances since the energizing of the embedded RF-ID tag reader results in an unwanted or forbidden energizing of the cellular phone. Comment: This was a very good point!

[0011] Furthermore, RF-ID tag reader—RF-ID tag reader intercommunication competes with well established short range communication standards such as Bluetooth which are implemented in numerous state of the art portable terminals. The implementation of competing communication solutions offering comparable functionality is not economical, especially when considering that the implementation of support of RF-ID tag reader—RF-ID tag reader intercommunication is a complex undertaking. However, a RF-ID tag reader with transponder functionality, which simulates a RF-ID tag while another RF-ID tag reader simulates a tag reader, provides enhanced communication between terminals, particularly when the terminals are mobile deices.

[0012] What is needed in the art is a Bluetooth terminal having (1) shortened terminal discovery and user identification time via a connectionless connection to another terminal or access point using RF-ID, the terminal or access point establishing a session enabling the terminal to conduct transactions with an interactive service application, and (2) an advanced reader device for radio frequency (RF) identification which is at least adapted to communicate with a radio frequency identification transponder and which is able to provide radio frequency identification transponder functionality also during unpowered conditions.

[0013] Prior art related to short range communication systems and RF-ID includes:

[0014] 1. PCT Publication WO01/39108 A1, published May 31, 2001, discloses a system that includes a mobile communication unit wherein a RF-ID identification module is added between the radio part and an antenna in a mobile telephone that includes a Bluetooth function. The module comprises a mixer for transposing identification messages from identification devices in a 2.45 GHz RF-ID system of the backscatter type to a baseband for further processing in a computer part of the unit. The unit may communicate with a super ordinate system, via a standard call channel or Bluetooth channel. The unit is also cabled to send information to the identification devices for alerting or transmitting data, wherein modulation and encoding can be effected in accordance with the Bluetooth standard enabling the mixer to be included as an integral part of a standard Bluetooth radio.

[0015] 2. PCT Publication WO01/45038 A2, published Jun. 21, 2001, discloses a short-range communication system includes an interrogator, which interrogates multiple transponders located on a person and receives information separately from the transponders. The interrogator and/or the transponders may be held in an article of clothing or in personal effects of the person. The system enables the close worn by a person to communicate with a plurality of items and to obtain useful information. The network system may be configured so that any particular transponder may communicate with another transponder or a group of transponders of other locals to activate functions; cause action to otherwise shared data and/or information.

[0016] 3. PCT Publication WO01/45319 A1, published Jun. 21, 2001, discloses a first short-range radio link operating within a first link range. The first link is between a stationary unit and a mobile communication device in a wireless network where the stationary unit transmits an interrogation signal to the communication device, via a short-range communication link operating within a second link range, essentially smaller than the first link range. The mobile communication device receives the interrogation signal from the stationary unit and transmits a response signal, including a unique identification number of the mobile communication device to the interrogation signal. The stationary unit receives the response signal and authenticates the identification number. The stationary unit and the mobile communication device establish a connection, via the first short-range radio link.

[0017] 4. US Publication 20030114104, published Jun. 19, 2003 discloses a method and system for identifying when a first device is within a physical range of a second device, the second device is to establish substantive communications with. The method includes sensing which particular first device is within a physical range of the second device, and establishing substantive communications with the particular first device.

[0018] 5. JP 2001-278495 2001-09-13, Application No. JP0209325 JP, Filed 20020912, entitled Information Processing Apparatus and Method A1 Published 20030327 discloses an information processing apparatus and method capable of easily and rapidly starting radio communication. When a cellular telephone is placed in the vicinity of a personal computer, a strap ID is provided from a non-contact IC tag of a cellular telephone strap to a reader/writer) of the personal computer. The personal computer has a table of correspondence between the strap ID and the Bluetooth device name of the cellular telephone. Upon acquisition of a strap ID, the personal computer references the correspondence table and identifies the cellular telephone as a communication partner of the Bluetooth communication. The personal computer identifies the cellular telephone by referencing the Bluetooth device name among a plurality of Bluetooth devices including the cellular telephone and performs Bluetooth communication with the cellular telephone.

[0019] None of the prior art discloses or suggests (1) a Bluetooth terminal having a RF-ID identification for establishing a connectionless communication with a service application and conducting transactions with the application on a session basis where the connection time and user identification time are shortened relative to the standard Bluetooth terminal discovery process for conducting ses-

sions, and (2) a reader device included in or coupled to the terminal and adapted to operate in: (A) a reader operation mode and a transponder operation mode, the reader device supporting the near field communication (ECMA-340) standard; (B) a transponder mode or passive mode during periods of time, within which the reader is not energized and (C) operate automatically in a transponder operation mode during periods of time, within which the reader device is not energized.

## SUMMARY OF THE INVENTION

**[0020]** To overcome limitations in the prior art described above, and to overcome other limitations that will be apparent upon reading and understanding the present specification, the present invention is directed to: (1) shorten session set-up and identification time for interactive services over a short range radio link connection, more particularly Bluetooth connection, and (2) an advanced RF-ID tag reader with transponder functionality capable of simulating a RF-ID tag while in a powered down state. The terminal incorporates a RF-ID tag incorporating a Bluetooth terminal serial number and optionally a user ID. The RF-ID tag can be a passive or semi-passive tag. In the case of a semi-passive tag, it is possible to process information before transmission of any messages. This enables transmission of other valuable information such as Bluetooth clock information. If the Clock Offset value is transmitted with Bluetooth serial number, a subsequent paging protocol is faster. When the terminal enters the field of a combined RF-ID reader and Bluetooth access point (RF-ID/BTH), the Bluetooth serial number and other optional parameters are read from the RF-ID tag incorporated into the terminal. A terminal control circuit included in the terminal and responsive to a processor is informed about the detected interrogation signal. The terminal control circuit performs a determination to determine whether a Bluetooth connection is acceptable. A "No" determination causes the terminal control circuit to instruct the Bluetooth module to enter into a non-connectable mode. A "Yes" determination causes the terminal control circuit to instruct the Bluetooth module to enter into a page scanning mode. The RF-ID reader transfers the device serial number and other optional parameters to the access node. A Bluetooth paging operation can then be initiated by the access node using the Bluetooth serial number received from the RF-ID reader. In response to the page, the terminal performs a connection setup with the access node using normal Bluetooth session set-up procedure. If the Bluetooth clock information is also transmitted, the page can be made even faster, because the access node can use the terminal's clock information in Bluetooth paging procedure. Alternatively, the access node performs a service notification that includes links to local services. By transmitting the user-ID and other optional parameters, the service notification can be personalized. The paging process shortens the session setup time as compared to the normal Bluetooth terminal discovery process for establishing a session. The system can also be used in communication between two Bluetooth terminals if the terminals are respectively equipped with a RF-ID tag and a RF-ID reader. The reader device associated with the terminal is capable to serve as a radio frequency identification transponder, and comprises a reader logic unit a radio/high frequency (RF/HF) interface and an antenna. The reader device is adapted to communicate at least with radio frequency identification transponders in a reader operation mode. The reader device comprises additionally a transponder logic unit. The transponder logic unit is connected to the reader device and in particular to the radio/high frequency (RF/HF) interface such that the reader device acts as a radio frequency identification transponder in a transponder operation mode. In particular, the transponder logic unit is adapted to communicate with other reader devices for radio frequency identification transponders. The reader device for radio frequency identification transponders can be attached, connected, implemented and/or embedded in electronic device and particularly portable electronic devices, respectively.

**[0021]** In addition to the Bluetooth standard, the invention also applies to other wireless standards. The invention applies, for example, to the IEEE 802.11 Wireless LAN standards, the Japanese 3rd Generation (3G) wireless standard, the various 2G, 2.5G, and 3G cellular telephone system standards, the Infrared Data Association (IrDA) standard, the Digital Enhanced Cordless Telecommunications (DECT) standard, the Shared Wireless Access Protocol (SWAP) standard, the IEEE 802.15 Wireless Personal Area Network (WPAN) standard, the High Performance Radio Local Area Network (HIPERLAN) standard, and the Multimedia Mobile Access Communication (MMAC) Systems standard of the Japanese Association of Radio Industries and Businesses. For each of these standards, the initialization parameters for establishing a communications session between a terminal and an access point are stored in a RF-ID tag accompanying the terminal. The parameters are transferred to the RF-ID reader at the access point using RF-ID technology, thereby speeding up the process of initialization.

## DESCRIPTION OF THE DRAWINGS

**[0022]** The invention will be further understood from a detailed description of a preferred embodiment taken in conjunction with an appended drawing, in which:

**[0023]** **FIG. 1** is a representation of a Bluetooth terminal within the field of RF-ID reader providing a connectionless communication to an access point in a Bluetooth network for conducting transactions between the terminal and a service application on a sessions basis and incorporating the principles of the present invention, as follows:

**[0024]** **FIG. 1A** is a representation of a RF coverage area for a Bluetooth terminal with a RF-ID module;

**[0025]** **FIG. 1B** is a representation of RF-ID coverage of the Bluetooth terminal of **FIG. 1A**;

**[0026]** **FIG. 1C** is a representation of the Bluetooth coverage and RF-ID coverage of the Bluetooth terminal of **FIGS. 1A and B**;

**[0027]** **FIG. 2** is a representation of a Bluetooth terminal, including a passive RF-ID tag, according to one embodiment of the invention;

**[0028]** **FIG. 2A** is a representation of the passive tag of **FIG. 2**;

**[0029]** **FIG. 3** is a representation of a Bluetooth terminal, including a semi-passive RF-ID tag, according to one embodiment of the invention;

**[0030]** **FIG. 3A** is a representation of the semi-passive or active tag of **FIG. 3**;

[0031] **FIG. 4** is a representation of Bluetooth terminal including a RF-ID reader module for exchanging information with other RF-ID equipped devices according to one embodiment of the invention;

[0032] **FIG. 5** depicts a block diagram illustrating state of the art communication between a RF-ID tag reader and RF-ID tags;

[0033] **FIG. 5A** depicts a block diagram illustrating function units of a RF-ID tag reader according to an embodiment of the invention;

[0034] **FIG. 5B** depicts a block diagram illustrating an embodiment of a RF-ID tag reader according to the invention;

[0035] **FIG. 5C** depicts a block diagram illustrating an alternative embodiment of a RF-ID tag reader according to the invention;

[0036] **FIG. 6** is a representation of an access point in the system of **FIG. 1**, according to one embodiment of the invention;

[0037] **FIG. 7** is a representation of the access point of **FIG. 6** coupled to a content provider for conducting interactive services, according to one embodiment of the present invention;

[0038] **FIG. 8** is a representation of an access point of **FIG. 6** coupled to the RF reader providing terminal tag information for establishing a session with the terminal of **FIG. 2** or **3**, according to one embodiment of the invention;

[0039] **FIG. 9** is a communication process having shortened terminal discovery and user identification in establishing a Bluetooth connection between mobile terminals with RF-ID tag functionality operating in a show communication mode described in **FIG. 5B**;

[0040] **FIG. 9A** is a process **911** for determining whether a terminal within the range of an interrogating signal from another terminal should establish a Bluetooth connection to the another terminal;

[0041] **FIG. 10** is a session set-up process reducing session setup time between mobile terminals with RF-ID tag reader devices having tag Punctuality operating in a powered down show communication mode described in **FIG. 5C** in establishing a Bluetooth connection in **FIG. 1**;

[0042] **FIG. 11** is a representation of a process for conducting a cash transaction or a credit card transaction with a user in the system of **FIG. 1**, according to one embodiment of the invention; and

[0043] **FIG. 12** is a representation of a process providing a user with flight information at an airline gate, using the system of **FIG. 1**, according to one embodiment of the invention.

## DESCRIPTION OF PREFERRED EMBODIMENT

[0044] In the following description of the various embodiments, reference is made to the accompanying drawings, which form a part hereof, and in which is shown by way of illustration various embodiments in which the invention may be practiced. It is to be understood that other embodiments may be utilized and structural and functional modifications may be made without departing from the scope of the present invention.

[0045] **FIG. 1** discloses a system **100** incorporating principles of the present invention for RF-ID based discovery of Bluetooth terminals, which shortens the user identification time and speeds up session setup for interactive services between a terminal and a service application. The terminal **102** incorporates a RF-ID tag **106**, which stores ID information, such as the Bluetooth terminal serial number of the terminal **102**. The ID information including at least the Bluetooth serial number of the user terminal is transmitted by the RF-ID tag **106** via a radio link **108** to a RF-ID Reader **110**.

[0046] In one embodiment, the RF-ID tag **106** may be a passive tag, which operates without an internal battery source, deriving the power to operate from the radio field **112** generated by the RF-ID reader **110**. The Bluetooth terminal serial number is transmitted by the RF-ID tag **106** to the RF-ID reader **110**, and can be forwarded to a server **116**. Alternately, the RF-ID reader **110** can transfer the identity information to an access point **104**, which can forward the identity information to the server **116**. The server **116** can use the received terminal serial number or user ID to lookup information about either the user or the terminal **102**, and return the accessed information to the access point **104** for transfer to the terminal via radio link **115**.

[0047] In another embodiment, the RF-ID tag **106** can be a semi-passive or active tag. A semi-passive or active tag may include a read/write storage device powered by an internal battery allowing a greater RF communication range and higher data transmission rates. In the case of a semi-passive tag, it is possible to process information before message transmission. This enables transmission of other valuable information such as the Bluetooth Clock Offset of the terminal **102**. If the Clock Offset value of the terminal **102** is transmitted with the Bluetooth serial number, the subsequent Bluetooth paging protocol with the access point **104** is faster.

[0048] When the terminal **102** enters the radio field **112** of a combined RF-ID reader **110** and Bluetooth access point **104** (RF-ID/BTH), the Bluetooth serial number and other optional parameters are read by the reader **110** from the RF-ID tag **106**. If the terminal has a passive tag there is no option to update the tag information, so the information preferably includes only Bluetooth serial number of the terminal, which may be hard-coded within the RF-ID tag already in the terminal manufacturing line. In the case of semi-passive or active RF-ID tag, the tag information can be updated later on, so more information, such as Clock Offset information and User ID information can be maintained in the tag.

[0049] According to a preferred embodiment of the present invention, the RF coverage area of the RF-ID tag and the RF coverage area of the Bluetooth terminal are substantially the same (or at least in magnitude). **FIG. 1A** illustrates the Bluetooth RF coverage of the terminal. **FIG. 1B** illustrates RF-ID coverage of the same terminal. In **FIG. 1**C, the coverage areas of **FIGS. 1A and B** are "put together" and are substantially the same (in the optimum case) thereby requiring the RF-ID readers to send interrogation signals

having coverage in the same magnitude as that of the Bluetooth terminal coverage and requiring the RF-ID tag to have the same coverage as the terminal. The combined RF-ID reader **110** and Bluetooth access point **104** may also periodically send Bluetooth Inquiry messages to detect the terminal **102**. After receiving the Bluetooth serial number and other optional parameters by whatever means (using RF-ID or Bluetooth), the combined RF-ID reader instantly sends a Bluetooth paging message using the received information. It should be noted that according to various embodiments of the present invention, the coverage areas of Bluetooth and RF-ID may be significantly different, and the present Patent Application shall not be limited to any specific coverage areas.

[**0050**] Returning to **FIG. 1**, the RF-ID reader **110** transfers the device serial number; the terminal Clock Offset value, and other optional parameters including the Clock Offset value depending upon whether the terminal has a passive or a semi-passive RF-ID tag to the access node **104**. The access point now has enough information about the terminal **102** to skip the usual Bluetooth inquiry stage in establishing a Bluetooth connection, and can proceed directly to the Bluetooth paging stage. A Bluetooth paging operation is initiated by the access node **104** using the Bluetooth serial number of the terminal **102** received from the RF-ID reader and possibly the Clock Offset value of the terminal **102**. In response to the page, the terminal **102** performs a connection setup with the access point **104** using normal Bluetooth session set-up procedure. Additionally, the access point **104** can send a service notification to the server **116** to access data, such as links to local services. By transmitting user-ID or the serial number of the terminal **102**, the service notification to the server **116** can be personalized, and data uniquely associated with the user can be accessed. The RF-ID discovery/paging process shortens the session setup time as compared to the normal Bluetooth terminal discovery process for establishing a session. The system can also be used in communication between two Bluetooth mobile terminals, if the terminals are respectively equipped with a RF-ID tag **106** and a RF-ID reader **110**.

[**0051**] The access point **104** uses the information transferred from the RF-ID reader **110** to prepare and send a paging message to the terminal **102**. The access point **104** invokes its link controller to enter a page state where it will transmit paging messages to the paged terminal **102** using the access code acquired from the RF-ID tag **106**. The terminal **102** Bluetooth communication module is correspondingly set into page scanning state in response of detecting the interrogation signal from the access point **104**, and therefore it can receive the paging message from the access point **104**, which provides the terminal **102** with the access point's clock timing and access code. When the access point **104** sends a paging message to the terminal, a Frequency Hopping Synchronization (FHS) packet which includes the terminal's address is transmitted to enable the terminal **102** to synchronize itself with the access point **104**. The terminal **102** responds to the page with an acknowledgement packet, whereupon, the two devices form a synchronous connectionless link (ACL) and the access point **104** and terminal **102** transition into the connection state. Since the access point has initiated the page, it will be the master device and the terminal device will become the slave to the access point. Additional details for establishing the connection between the terminal and the access point are described in "The Bluetooth Special Interest Group, Specification Of The Bluetooth System", Volumes 1 and 2, Core and Profiles: Version 1.1, 22nd Feb., 2001.

[**0052**] The communications between the terminal **102** and access point **104** are passed through the reader **110**, via a connection **114** to the server **116**, which executes a service application **118**. Alternatively, the access point **104** may communicate directly with the server **116** via a wired or wireless connection **119**. The terminal **102** and the service application **118** interact, via the standard Bluetooth message protocols described in "The Bluetooth Special Interest Group, Specification Of The Bluetooth System", Volumes 1 and 2 supra.

[**0053**] The terminal messages are processed by the application **118**. In one embodiment the messages between the terminal **102** and the application **118** are exchanged using the Wireless Access Protocol (WAP), allowing mobile terminals to use data services and providing access to the Internet. WAP supports a client/server architecture. WAP enabled client devices can use micro browsers, which are specially designed web browsers that fit into mobile devices, such as a mobile cellular handset. A micro browser is designed to work with a small screen and use less memory than a browser running on a desktop computer. Additional information about the WAP standard and the WAP client/server architecture can be found in the book by Charles Arehart, et al. entitled, "Professional WAP", published by Wrox Press Ltd., **60610** (ISBN 1-866124-04-1).

[**0054**] **FIG. 2** is a functional representation of the mobile terminal **102** according to one embodiment of the present invention. Included in the terminal **102** is a display **202** for displaying messages received from the access point **104** or other terminal and entering messages and data via a keypad **203** for transmission to the access point or other terminal. A short-range transceiver **204** linked to an antenna **205** provides communication over a Bluetooth network for messages and data. It should be noted that the antenna used in short-range communication is not the same antenna used in communication with a mobile network. The transceiver **204** interacts with a CPU **208** for implementing Bluetooth protocols and processing messages exchanged between the access point **104** and the terminal **102**. The CPU **208** is linked to a volatile or dynamic random access memory (DRAM) **210** containing an operating system for processing messages, protocols, etc. The CPU **208** executes programs stored in a non-volatile or read only memory **212** providing instructions for managing and controlling the operation of the terminal **102**. The CPU **208** is also connected to a cellular telephone network transceiver **213** for interacting with a cellular network, such as the Global System Mobile (GSM) and the like via the antenna **205**. In accordance with the invention, a RF-ID tag **214** is installed in the terminal **102**. In one embodiment, the tag may be a passive device which operates without an internal battery source, deriving the power to operate from the field **112** generated by the RF-ID reader **110** which is inductively coupled to the passive tag. Passive tags have typically a shorter reading range and require a higher-powered RF-ID reader **110**. Passive tags are also constrained in their capacity to store data and in the ability to perform well in a noisy electromagnetic environment. Passive tags may contain varying amounts of information ranging from a small storage holding only an ID number to a 128 k byte memory sufficient to

hold a serial identification number and parity bits. The RF-ID reader **110** communicates with the RF-ID tag **214** through the use of RF energy. The transferred data between the RF-ID tag **214** and the RF-ID reader **110** requires the data to be modulated on a carrier wave. Carriers operate in several frequency bands ranging from 612-500 kHz to 2.4-5.8 GHz. Modulation of the carriers relies upon Amplitude Shift Key (ASK), Frequency Shift Key (FSK) and Phase Shift Key (PSK).

[**0055**] **FIG. 2A** shows the passive RF-ID tag **214** in more detail. According to one embodiment, the tag comprises a radio frequency ID transponder **215**, which conforms to the principles of RF-ID technology. A tag antenna **216** is connected to the transponder **215**, typically a microchip using well-known coil-on-chip technology. The chip may include a user programmable E-PROM incorporating a user identification and Bluetooth serial number (BT_ADDR). The RF-ID tag **214** is capable of receiving an interrogation signal from the RF-ID reader **110** (see **FIG. 1**) and separating the RF energy from the received signal. The energy captured by the antenna **216** is analyzed by the microchip and is sufficient to provide a response signal to the RF-ID reader **110**. The response signal includes at least the Bluetooth serial number for transfer to the access point **104** to initiate a paging operation for the terminal **102**.

[**0056**] **FIG. 3** discloses the terminal **102** of **FIG. 2**, except that it substitutes a semi-passive or active tag **215** for the passive tag **214**. The RF-ID tag **215** may be a read/write device powered by an internal battery allowing greater communication range and higher data transmission rates. The RF-ID tag **215** is connected to a RF-ID memory **216**, which may be a random access memory and/or a read-only non-volatile memory. The random access memory facilitates temporary data storage during reader interrogation and response. The read-only memory stores the operating system and contains instructions related to terminal operation. The RF-ID tag **215** is connected to the CPU **208** for receiving the Bluetooth Clock Offset data of the terminal **102** and other possibly stored data required by the access point **104** in establishing a Bluetooth connection. In the case of a semi-passive RF-ID tag, the tag after receiving an interrogation signal may activate the Bluetooth module of the user terminal and set it to page scanning mode.

[**0057**] **FIG. 3A** shows the RF-ID semi-passive tag **215** in greater detail. An antenna film or coil **220** is connected to a microchip **221** including a power supply (not shown) and analog circuit **223** for converting the RF signals from the RF-ID reader **110** into digital signals for processing by digital circuitry **225** in reading and writing data into the tag memory **216**. The tag **215** communicates with the CPU **208** for updating information within the tag, e.g. Clock Offset information. Also, The tag **215** may allow the RF-ID reader **110** to alter the data stored in the RF-ID tag **215** by writing into and reading from the tag memory **216**.

[**0058**] **FIG. 4** shows the terminal **102** of **FIG. 3** further including a terminal RF-ID reader module **220** connected to the CPU **208**. The terminal **102** may use the reader module **220** using e.g. an internal battery (not shown) as a power source to transmit an interrogation signal via the antenna **219** for receiving the Bluetooth serial number and possibly other information, such as Bluetooth Clock Offset information of other terminals within proximity to the reader module **220**. The module disables the RF-ID tag **215** when sending the interrogation signals to other handheld terminals. The electromagnetic coupling of the terminal **102** and the other terminals and the RF-ID reader **110** (**FIG. 1**) allows non-line-of-sight communication between the terminals and with the RF-ID reader.

[**0059**] To enlighten state of the art for RF-ID tags and RF-ID tag readers, **FIG. 5** shows a schematic block diagram to describe state of the art use of RF-ID tags and RF-ID tag readers.

[**0060**] In a first approach, the state of the art communication between RF-ID tags readers and RF-ID tags will be enlightened. The block diagram shows a portable terminal **1** which operates an application **400** and which has tag reader capability such that data flow is established between a RF-ID tag **700** and the application **400**. The portable terminal **1** is any electronic terminal device, which is adapted to communicate with a RF-ID tag **700**.

[**0061**] The portable terminal **1** is connected to a RF-ID tag reader to enable communications between application **400** operated on the portable terminal **1** and the RF-ID tag **700**. The RF-ID tag reader may be realized as a stand-alone unit which may be detachably connected to the portable terminal **1** or which may be embedded in the portable terminal **1**.

[**0062**] The RF-ID tag **700** illustrated in **FIG. 5** includes a storage component (Memory) **750** and a microprocessor ($\mu$P) or microcontroller ($\mu$C) **710**. An antenna **760** allows the RF-ID tag-**700** to receive an interrogation signal and to transmit a response signal e.g. on receiving of such an interrogation signal. The storage component **750** contains the RF-ID tag information that comprises in accordance with the present invention at least a tag identification sequence, which is suitable to address a plurality of individual services. An interrogation signal and a response signal are communicated with the portable terminal **1** via the wireless communication link **5** which is a radio frequency (RF) communication link, or depending on the deployed frequency actually a high frequency (HF) communication link. The coupling of RF-ID tag reader and RF-ID tag is preferably inductive. The storage component **750** may be one of a read-only or a read/write (i.e. random access) storage component embodied as volatile or non-volatile memory. In case of a read-only storage component the RF-ID tag reader is allowed to retrieve stored information, whereas in case of read/write storage component the RF-ID tag reader may be allowed to read information and to write information. The communication link established between RF-ID tag reader and RF-ID tag **700** allows for an application **400** operated on the portable terminal **1** transmitting one or several commands to the RF-ID tag **700** to request information, which is answered by RF-ID tag **700** by a corresponding response comprising the requested information. The received request information is supplied to the originally requesting application **400** to be processed. The one or several commands may be simply the interrogation signal or may be embedded in the interrogation signal by modulation. The RF-ID tag reader establishes a data flow between RF-ID tag **700** and application **400**.

[**0063**] **FIG. 5A** shows a diagram of functional blocks, which allow realizing a RF-ID tag reader device **600** with RF-ID tag functionality according to an embodiment of the present invention. The illustrated RF-ID tag reader device

**600** includes a RF-ID tag reader unit **602** which shall represent the RF-ID tag reader functionality and a RF-ID tag unit **604**, which shall represent the RF-ID tag functionality. Both functional units, i.e. the RF-ID tag reader unit **602** as well as the RF-ID tag unit **604**, require a radio frequency (RF) interface (and a high frequency (HF) interface, respectively) and an antenna adapted to the radio frequency (RF) deployed for operating. The embodiment illustrated in **FIG. 5A** shows a common RF interface **606** and a common antenna **608** used by both functional units. It shall be understood that the radio frequency interface such as interface **606** as well as the antenna such as antenna **608**, which are presented in the present description according to embodiment of the invention, are adapted to employ any suitable radio frequency used in the field of RF-ID tags and transponders, respectively. In particular, at least typical operation frequencies aforementioned shall be implementable with embodiments of the present invention.

[**0064**] In case of RF-ID tag reader functionality, the antenna **608** is adapted to transmit one or more interrogation signals and to receive one or more response signals for retrieving information from a RF-ID tag. In view of the aforementioned near field communication standard (ECMA-340), the antenna **608** may be adapted to allow communication in accordance with the standard.

[**0065**] Depending on the capability of the RF-ID tag reader unit **604**, the antenna is adapted to communicate with a RF-ID tag in passive communication mode and with another RF-ID tag reader device **600** in active communication mode.

[**0066**] In case of RF-ID tag functionality the antenna **608** is adequate to receive one or more interrogation signals and to transmit one or more response signals carrying information retrieved from the RF-ID tag unit **604**.

[**0067**] The antenna **608** is connected to the RF interface **606** via one or more signal connections **610** which supplies RF/HF signals generated by the RF interface **606** to the antenna **608** and which accepts RF/HF signals received by the antenna **608**.

[**0068**] The RF interface **606** is responsible for both modulating and demodulating the signals to be transmitted and received by the antenna **608**, respectively. Therefore, the RF interface **606** couples to the RF-ID tag reader unit **602** and the RF-ID tag unit **604**, respectively. In particular, the RF interface **606** receives from the RF-ID tag reader unit **602** signals to be modulated and transmitted and transmits demodulated signals to RF-ID tag reader unit **602**. The RF interface **606** also transmits demodulated signals to the RF-ID tag unit **604** and receives signals from the RF-ID tag unit **604** to be modulated and transmitted. More particularly, the RF interface provides further signals necessary for the operation of the RF-ID tag unit **604** which are in detail a power supply signal (voltage signal) and a clock signal. The power supply signal is gained from the coupling of the interrogating electromagnetic field whereas the clock signal is obtained from the demodulator included in the RF interface. The power supply signal and the clock signal are obligate for operating the RF-ID tag unit **604** as a passive RF-ID tag energized by interrogating signal of a RF-ID tag reader device.

[**0069**] The RF-ID tag reader device **600** illustrated in **FIG. 5A** comprises a switch **612**, which is operated to switch between RF-ID tag reader functionality and RF-ID tag functionality. The switch **612** is interposed between RF-ID tag reader unit **602**, RF-ID tag unit **604** and RF interface **606** and operated with a switching input to which a switching signal is provided via a switching line **110**. In detail, signal connections **614** carry at least signals generated by the RF-ID tag reader unit **602** to be modulated by the RF interface **606** and to be transmitted by the antenna **608** and signals received by the antenna **608** and demodulated by the RF interface **606** to be supplied to the RF-ID tag reader unit **602**. The signal connections **614** are switched by the switch **612** to the RF interface **606** connected to the switch **612** via signal connections **616**.

[**0070**] Analogously, signal connections **618** carry at least signals received by the antenna **608** and demodulated by the RF interface **606** to be supplied to the RF-ID tag unit **604** and signals generated by the RF-ID tag unit **604** to be modulated by the RF interface **606** and to be transmitted by the antenna **608**. The signal connections **618** are switched by the switch **612** to the RF interface **606** connected to the switch **612** via signal connections **616**. The aforementioned power supply signal and clock signal are supplied from the RF interface **606** to the RF-ID tag unit **604** via the switch **612** and may be part of the signals transmitted via the signal connections **616** and signal connections **618**.

[**0071**] Depending on the switching state or position of the switch **612**, either the RF-ID tag reader unit **602** is coupled to the RF interface **606** or the RF-ID tag unit **604** is coupled to the RF interface **606**. In the former case RF-ID tag reader functionality is available whereas in the latter case RF-ID tag functionality is available.

[**0072**] The RF-ID tag reader device **600** and hence the RF-ID tag reader unit **602** is provided with an interface indicated by communication connections **620** to allow an application **400**, which is operated on a portable terminal **700** comparable to portable terminals **1** or **2**, communicating with the RF-ID tag reader device **600** and in particular with the RF-ID tag reader unit **602**, respectively, as shown in **FIG. 5** The interface interfacing between RF-ID tag reader device **600** and application is established by appropriate hardware and software interfaces that allow access of the application **400** to the RF-ID tag reader device **600**.

[**0073**] Referring back to near field communication standard (ECMA-340), the purposed RF-ID tag reader functionality and the RF-ID tag functionality as described above in view of an embodiment illustrated by functional units depicted in **FIG. 5** establish a further communication mode additional to the standardized passive and active communication mode.

[**0074**] As described in detail above, the field communication standard (ECMA-340) addresses the operation of RF-ID tag reader devices and provides the active communication mode, which is used preferably in communication with one or more RF-ID tags. Additionally, the field communication standard (ECMA-340) provides the passive communication mode, which is intended for communication with another RF-ID tag reader device. Both the active and passive communication modes require necessarily energizing of the communicating RF-ID tag reader device via a power supply. In case of the active communication mode, the necessity of a power supply is obvious since communication with one or more passive RF-ID tags requires ener-

gizing of the passive RF-ID tags via one or more interrogating signals of the communicating RF-ID tag reader device.

[0075] Additionally, the active as well as passive communication modes allow operating reading functionality and writing functionality of the RF-ID tag reader device. That means, the RF-ID tag reader device having reading functionality is adapted to retrieve information stored in one or more RF-ID tags. The reading functionality is at least the basic functionality of a RF-ID tag reader device. The RF-ID tag reader device having writing functionality is adapted to add information to RF-ID tags to be stored and/or modify information stored in RF-ID tags. It shall be noted that the adding and/or modifying of information stored in RF-ID tags depends on the capability of the RF-ID tags and/or authorization of the RF-ID tag reader device. The writing functionality is an enhanced functionality of a RF-ID tag reader device.

[0076] The RF-ID tag functionality as described above in detail in view of an embodiment illustrated by functional units depicted in **FIG. 5** may be employed to establish a new communication mode, which will be denoted as show communication mode. In the show communication mode the RF-ID tag functionality is switched while the RF-ID tag reader functionality is out of operation. The show communication mode is distinguished from the known communication modes therein that the RF-ID tag functionality provides the physical advantages of a passive RF-ID tag, which does not require any internal power supply. This is in clear contrast to the passive communication mode, which may be regarded as functionality, which simulates a RF-ID tag. Further, advantages addressing the implementation of the RF-ID tag functionality will become apparent in view of RF-ID tag reader devices according to embodiments of the present invention.

[0077] The information stored in the RF-ID tag unit **604** that can be retrieved by a RF-ID tag reader device **600** as illustrated above is stored in an adequate storage component. The storage component may be a read-only storage component or a configurable storage component. In case of a configurable storage component a number of storage technologies are applicable and in particular non-volatile configurable storage technologies are of interest.

[0078] It shall be assumed that the RF-ID tag reader device **600** as embodied in **FIG. 5A** is attached to or embedded in a portable terminal **700** such as portable terminals **1** and **2**. Conventionally, the RF-ID tag reader device **600** may be provided with an interface such as a serial interface interfacing data exchanged between the RF-ID tag reader device **600** and the portable terminal **700** such that applications executed on the portable terminal **700** can use the functionality, which is provided by the RF-ID tag reader device **600**. An application program interface (API) layer may support the communication between applications such as applications **400** and **410** and the RF-ID tag reader device **600**.

[0079] Whereas the operation of a RF-ID tag reader device **600** according to the embodiment has been described by the means of functional units the following **FIG. 5**B and **FIG. 5C** illustrate more detailed embodied RF-ID tag reader device.

[0080] **FIG. 5B** depicts a block diagram, which illustrates an embodiment of a RF-ID tag reader device according to still another embodiment of the invention.

[0081] The tag reader device **600** comprises a reader logic **640**, an optional reader memory **642**, a RF interface **606** and an antenna **608**. These components establish a complete conventional tag reader device. With respect to the present invention, the illustrated tag reader device **600** comprises further a matrix switch **644**, a tag logic **646** and a tag memory **648**. The tag reader device **600** is coupled to the terminal **700** via an appropriate interface such that the application **400** can communicate with the tag reader device **600**. The illustrated tag reader device **600** corresponds in its design to the arrangement of the functional units explained with reference to **FIG. 5A**

[0082] The antenna **608** and the RF interface **606** are common units used for RF-ID tag reader operation and for RF-ID tag operation. The matrix switch **644** is controlled via the switch line **110**, which is herein supplied with switching signal by the terminal **700**. Alternatively, without leaving the scope of the invention, the switching state of the switch **644** may be also controlled by the RF-ID tag reader device **600** itself, which may ensure a higher readability. In show communication mode, as defined above, the antenna **608** and the RF interface **606** are coupled via the switch **644** to the tag logic **646**, whereas in all other communication modes the antenna **608** and the RF interface **606** are coupled via the switch **644** to the reader logic **640**. Since the RF-ID tag functionality corresponds in its externally visible physical properties to a passive RF-ID tag, the RF interface may provide additionally at least a power supply signal and a clock signal to the tag logic **646** via the switch **644** (shown) or directly unswitched (not shown).

[0083] In show communication mode, i.e. when operating RF-ID tag functionality, the RF interface **606** forms the interface between the analogue, radio frequency transmission channel from a requesting RF-ID tag reader device to the RF-ID tag and the tag logic **646** of the RF-ID tag. The modulated RF (HF) signal from the requesting RF-ID tag reader device is reconstructed in the RF interface **606** by demodulation to create a digital serial data stream for reprocessing in the tag logic. The tag logic **646** is preferably embodied as a digital logic serving as address and/or security logic. The tag logic **606** also includes logic for a terminal control circuit (not shown) for determining whether a short-range connection, typically Bluetooth is acceptable as will be described hereinafter in connection with a description of **FIGS. 9 and 9**A. A clock-pulse generation circuit in the RF interface **606** generates the system clock for the data carrier from the carrier frequency of the RF (HF) field supplied by the requesting RF-ID tag reader device. The RF interface **606** may further incorporate a load modulator or backscatter modulator (or any alternative procedure, e.g. frequency divider), controlled by the digital data being transmitted, to return data to the requesting RF-ID tag reader device. Moreover the RF interface **606** draws current from the antenna **608** which is rectified and supplied to the tag logic **646** as a regulated supply voltage.

[0084] The tag logic **646** may support a passive read-only RF-ID tag implementation and a re-writeable RF-ID tag implementation. As soon as a passive read only RF-ID tag enters the interrogation zone of a RF-ID tag reader device it

begins to continuously transmit information stored in the tag memory **648** associated with tag logic **646**. In principle, the tag memory **648** illustrated as a separate component may be included in the tag logic **646**. The stored information may comprise a tag identification number, which relates to the original purpose of the RF-ID tags. But the stored information is not limited thereto. Depending of the realization and complexity of the tag logic **646**, also sophisticated operations on stored information is possible wherein the operations can be instructed by commands additionally transmitted in the interrogation zone, e.g. modulated on the interrogating signal. Typically, the communication between passive read-only RF-ID tags and the RF-ID tag reader devices is unidirectional, with the RF-ID tag sending its stored information to the RF-ID tag reader device continuously. But data transmission from the RF-ID tag reader device to the RF-ID tag is possible. A re-writeable RF-ID tag implementation that can be written with data by the RF-ID tag reader device can be realized with varying memory capacities which only depends in the implementation of the tag memory **648**. Typically write and read access to the re-writeable RF-ID tag is often in blocks, which are formed by assembling a predefined number of bytes, which can then be read or written.

[**0085**] The tag logic **646** may be realized in a simple implementation as a state machine.

[**0086**] In active and/or passive communication modes, i.e. when operating RF-ID tag reader functionality, the RF interface **606** forms a transmitter and receiver.

[**0087**] The RF interface **606** should perform the following functions when operated in conjunction with RF-ID tag reader functionality. The RF interface **606** is adapted to generate radio/high (RF/HF) frequency transmission power serving as interrogating signal to activate RF-ID tags and supply RF-ID tags with power. Further, the RF interface **606** is adapted to modulate transmission signals on the carrier frequency to transmit data and/or instructions to the interrogated RF-ID tags and to receive and demodulate response signals transmitted back by the interrogated RF-ID tags.

[**0088**] The reader logic **640** may be realized as an application specific integrated circuit (ASIC) module, a microcontroller ($\mu$C), a microprocessor ($\mu$P) and the like. In order to allow communication with the terminal **700**, in which the RF-ID tag reader device **600** is embedded or to which the RF-ID tag reader device **600** is attached, the reader logic **640** also provides a data communication interface such as a serial interface (e.g. a RS232 interface) to perform the data exchange between the RF-ID tag reader device **600** (slave) and the external application **400** (master) executed on the terminal **700**.

[**0089**] The reader logic **640** may also be associated with an optional reader memory **642**.

[**0090**] Conventionally, a distinct reader memory **642** is not necessary for RF-ID tag reader functionality, but the reader memory **642** may be used as a buffer storage for communication with the terminal **700** as well as with a RF-ID tag or another RF-ID tag reader device.

[**0091**] In view of the present invention, the tag memory **648** may be configurable; i.e. information stored in the tag memory may be modified, added, processed and/or deleted. According to an embodiment of the invention, the configuration of the information stored in the configurable tag memory **648** may be limited to the terminal **700** and applications executed thereon. Moreover, the access to the configurable tag memory **648** may be limited to one or more specific applications executed on the terminal **700** to ensure data integrity, which may be required and necessary, respectively, depending on the kind of information stored.

[**0092**] The access to the tag memory **648** to configure information stored therein may be established via a dedicated interface (not shown) connecting the terminal **700** and one or more applications, respectively, executed thereon to the memory tag **648**. Alternatively, the access to the tag memory **648** to configure information stored therein may be established (mediated) via the reader logic **640** and the microprocessor ($\mu$P)/microcontroller ($\mu$C), respectively, which is provided with an interface interfacing data communication between RF-ID tag reader device **600** and terminal **700** and one or more applications executed thereon, respectively.

[**0093**] In case the configuration of the information stored in the tag memory **648** is limited to e.g. a specific application executed on the terminal **700**, the externally visible RF-ID tag property is comparable to a read-only RF-ID tag. That means, another communicating RF-ID tag reader device recognizes the RF-ID tag reader device **600** as a read-only RF-ID tag when the RF-ID tag reader device **600** is switched to RF-ID tag functionality. In particularly, the other communicating RF-ID tag reader device recognizes the RF-ID tag reader device **600** as a passive read-only RF-ID tag when the RF-ID tag reader device **600** is switched to RF-ID tag functionality.

[**0094**] The configurable tag memory **648** may be understood as dynamic tag memory **648**, which on the one side shows read-only properties to other communicating RF-ID tag reader devices, whereas the information stored in the tag memory **648** is modifiable under circumstances enlightened above. In principle, the storage capacity of the tag memory **648** is not limited such that the capacity may be adapted to range of applications, to which the information stored in the tag memory **648** is dedicated. In particular, the storage capacity may be adapted to such an amount, which is typically for passive read-only small RF-ID tags. The distance between a passive read-only RF-ID tag and a RF-ID tag reader device for communicating therebetween is limited due to the fact that field energy of the interrogating signal, which is emitted by the RF-ID tag reader device, is used for energizing the passive RF-ID tag. This implies that the information stored in the passive RF-ID tag has to be transmitted as long as the passive read-only RF-ID tag and the RF-ID tag reader device retrieving the information stored in the passive RF-ID tag are spaced apart in an adequate distance even in case one of the communicating devices (the RF-ID tag and the RF-ID tag reader device, respectively) are in motion. The smaller the storage capacity and the amount of information communication between the RF-ID tag and the RF-ID tag reader device the higher the probability of reliable transmission. A typical passive read-only RF-ID tag and therefore also the tag memory **648** may be provided with a storage capacity of 612 bytes to 606 bytes but the present invention shall not be understood as limited thereto.

[**0095**] Alternatively, a security logic, which can be implemented in the tag logic **646**, may allow providing config-

urability of the tag memory **648** similar to a RF-ID tag of re-writeable type and in particular similar to a passive re-writeable RF-ID tag. In this case the security logic ensures information integrity and/or authenticated access.

[**0096**] A configurable tag memory may be realized as a non-volatile storage component. For example programmable read-only memory (PROM) or electrical erasable read-only memory (EEPROM) may be employed. But also promising non-volatile configurable storage technologies such as magnetic random access memory (MRAM), ferrite random access memory (FRAM) or non-volatile random access memory on the basis of polymer material may be employed. The enumeration is not limited thereto but further non-volatile configurable storage technologies may be used. Non-volatile configurable storage technologies are primarily addressed since one of the advantages of the present invention is that the show communication mode (which corresponds to the explained RF-ID tag functionality of the RF-ID tag reader device **600**) is independence from any power supply.

[**0097**] **FIG. 5C** depicts a block diagram illustrating an alternative embodiment of a RF-ID tag reader device according to still another embodiment of the invention. The RF-ID tag reader device embodiment illustrated in **FIG. 5C** is comparable to the RF-ID tag reader device embodiment shown in **FIG. 5A** in several points. A common RF interface **606** and a common antenna **608** serve for RF-ID tag reader functionality and RF-ID tag functionality. The reader logic **646** is realized as a microcontroller ($\mu$C) and a microprocessor ($\mu$P), respectively, which provides for data communication interface to the terminal **700** and the application **400** executed thereon, respectively. The reader logic operates the interface and protocol framework for communicating with RF-ID tags (passive communication mode) and in particular, when supporting active communication mode, for communicating with RF-ID tag reader devices. An optional reader memory **642** is associated with the microcontroller ($\mu$C) and a microprocessor ($\mu$P), respectively.

[**0098**] A switch/logic component **650** is interposed between RF interface **606** and reader logic **640** to switch between RF-ID tag reader functionality and RF-ID tag functionality as described in detail above. The switch/logic component **650** implement tag logic necessary for providing RF-ID tag functionality. Correspondingly, the tag memory **648** is connected to the switch/logic component **610**.

[**0099**] The common RF interface **606** provides signals to the switch/logic component **650**, which are required for operation of RF-ID tag reader functionality and RF-ID tag functionality, wherein in this embodiment the switch/logic component **650** passes through signals to the microprocessor ($\mu$P) **640**, which are required by the microprocessor ($\mu$P) **640**. The passing through of the signals depend on the switching state of the switch/logic component **650**. Alternatively, the switch/logic component **650** and the microprocessor ($\mu$P) **640** may be implemented in a common logic component (not shown), which is adapted to operate functions of the switch/logic component **610** as well as functions of the microprocessor ($\mu$P) **640**.

[**0100**] As aforementioned, the switching state of the switch/logic component **650** and the switch defines the functionality of the RF-ID tag reader device **600**, respectively. The switching state and therefore the switching operation is important to ensure proper operation of the RF-ID tag reader device **600** as enlightened. According to an embodiment, the switching state of the switch/logic component **650** and the switch is controlled by a switching signal supplied thereto via the switch line **110**. The switching signal is generated by the terminal **700**, to which the RF-ID tag reader device **600** is connected. The controlling of the switching state by an specific application executed on the terminal **700** may be critical and less reliable, respectively, since in case of a sudden or unexpected loss of power of the terminal **700** the switching state is undefined or the switching state remains in its former switching state such that RF-ID tag functionality may not be switched. This situation may be unsatisfactory.

[**0101**] In a more reliable embodiment of the RF-ID tag reader device **600** according to the present invention, the selecting of the switching state may be semi-autonomously or autonomously (corresponding to a semi-autonomous operation mode and a autonomous operation mode, respectively). Semi-autonomous operation mode means that for example in case of a sudden or unexpected power loss or always when the RF-ID tag reader device **600** is out of power supply the RF-ID tag functionality is selected and the switching state is correspondingly adapted thereto. Analogously, the RF-ID tag reader device **600** may be operable with RF-ID tag reader functionality in case the terminal **700** and one or more applications executed thereon, respectively, instruct to select/switch to RF-ID tag reader functionality. So if no explicit indication to select RF-ID tag reader functionality is present the RF-ID tag reader device **600** is operated in RF-ID tag functionality by default.

[**0102**] In autonomous operation mode the switch, i.e. the switch and the switch/logic component **650** respectively, comprise a switching logic which autonomously selects and switches between the RF-ID tag functionality and the RF-ID tag reader functionality.

[**0103**] It shall be noted, that the RF-ID tag reader functionality may support passive communication mode and active communication mode in accordance with near field communication standard (ECMA-340) and the RF-ID tag functionality may support show communication functionality which has been defined above and described in detail.

[**0104**] Further details on a RF-ID tag reader with transponder functionality are described PCT Application IbO3/02900, filed Jul. 23, 2003, assigned to Nokia Corporation and fully incorporated herein by reference.

[**0105**] **FIG. 6** is a representation of the access point **104** according to one embodiment of the invention. The access point RF-ID module **503** is connected to the RF-ID reader **110**. The access point RF-ID module **503** transfers the Bluetooth serial number and Bluetooth Clock Offset information received from the terminal **102**, to the CPU **502**. The CPU **502** controls a short-range transceiver module **504** for initiating Bluetooth inquiry and paging processes with the terminal **102**, via an antenna **505**. The CPU **502** is further connected to storage RAM **510** and the read-only memory **512**, which provide the connections and protocols to enable the terminal **102** to interact with a content database **514**. The user at terminal **102** interacts with the content database **116** using the WAP protocol. At the conclusion of the user's session with the content database, the terminal-to-access point connection is dropped.

[0106] **FIG. 7** discloses the access point of **FIG. 5** in which the CPU **502** is linked to the remote content provider **116** (See **FIG. 1**) including the content database **514**. The CPU **502** implements terminal-to-content provider signaling using program instructions stored in the memory/ROM **512**, after establishing a connection with the terminal **102** using the access point RF-ID module **503** input.

[0107] **FIG. 8** shows the RF-ID reader **110**, connected to the access point **104** via a connection **710**, according to one embodiment of the invention and transferring the Bluetooth serial number and possibly the Bluetooth Clock Offset information received from the terminal **102** via the antenna **219**. The CPU **502** receives the demodulated serial number signal and clock information generated by the RF-ID reader module **716** based upon the connectionless communication between the terminal **102** and the RF-ID reader **110**. The CPU **714** packetizes the Bluetooth serial number and Bluetooth Clock Offset information for transfer over line **710** to the access point **104** using programs available in the memory **718**. The access point **104** initiates the Bluetooth paging process in lieu of the Bluetooth inquiry process and the access point serves as the master device based upon the user identification, terminal serial number and clock information. The clock information allows the access point to speed up the connection establishment with the mobile terminal in establishing a session with the terminal **102** even more. By replacing the possibly time-wasting Inquiry procedure with faster RF-ID identification method session set-up time is shortened and also Bluetooth master-slave switching step is eliminated because the access point automatically becomes the master in response to initiating the paging. Alternatively the access point **104** may send a service notification message including links to local services as described in copending application Ser. No. 09/985,444, filed Nov. 1, 2001, assigned to the same assignee as that of the present invention and fully incorporated herein by reference.

[0108] **FIG. 9** describes one embodiment of a communication process **900**. Each terminal includes a RF-ID reader module **906**, **908**, which may act in an active mode or a passive mode, according to the ECMA 340 standard. In the present instance, the readers operate in a show communication mode., as described in **FIG. 5B**. The terminal **902** generates an interrogating signal **910**. When the terminal **904** comes within the range of the signal **910**, it enters into a process **911**, shown in **FIG. 9**A, for processing the signal. In step **913**, the terminal RF-ID module detects the interrogation signal. In step **915**, the RF-ID module sends a response signal to **902** including an address of a Bluetooth module of the terminal **904**. A terminal control circuit included in the terminal **904** and responsive to a processor **208** (See **FIG. 4**) is informed about the detected interrogation signal that was responded to in step **917**. The terminal control circuit performs a determination in step **919** to determine whether a Bluetooth connection is acceptable. A "Yes" determination result causes the terminal control circuit in step **921** to instruct the Bluetooth module to enter into a page scanning mode. A "NO" determination result causes the terminal control circuit in step **923** to instruct the Bluetooth module to enter into a non-connectable mode. The determination may be based on the current mode of the Bluetooth module of the terminal. For example, if the terminal Bluetooth module is already set into a non-connectable mode, the event of detecting an interrogation signal does not override the current terminal settings. Also, the current context of the terminal may define whether the terminal Bluetooth connection is acceptable. As one example when a terminal is set into a silent mode also the Bluetooth connection may be set into non-acceptable.

[0109] Returning to **FIG. 9**, the terminal **904** transmits a paging response message **920** to the terminal **902** using the BD_ADDR of the terminal **902** included in the message **918** The terminal **902** proceeds to establish a connectionless connection with the terminal **904** serving as the slave and the terminal **902** serving as the master device. Further details on establishing a Bluetooth connection between terminals whether mobile or stationary are described in the text as described in Bray, et al., "Bluetooth Connect Without Cable", at pg. 73-85.incorporated herein by reference. The terminals **902** and **904** exchange information with the reader module **906** simulating a RF-ID tag reader and the reader module **908** simulating a RF-ID tag in a passive mode.

[0110] **FIG. 10** is a representation of a shortened session setup process **1000** for the system of **FIG. 1**, where the device **1** and device **2** are portable devices and device **2** serves as an access point. Device **1** includes a Bluetooth terminal **1001** and a RF-ID tag reader **1003** in a powered down state The device **2** includes a RF-ID tag reader as scanner **1005** coupled via scanner channel **1006** to a Bluetooth module **1007** serving as the access point for the system. The RF-ID tag readers **1002** and **1005** have tag functionality and operate in a show communication mode, as described in **FIG. 5C** In step **1**, The device RF-ID scanner **1005** energizes the RF-ID tag **1003** of device **1** and in step **2** at least a portion of the device **1** ID information is transmitted, via the RF-ID scanner channel **1006** to device **2**. The received ID information of the device **1** module is forwarded to the device **2** module via the scanner channel **1006** in step **3**. The device **2** module sets up a connection through a Bluetooth channel to page the Bluetooth module **1001** using the ID information of the Bluetooth module, plus other module **1** identification stored in device **2**.

[0111] The paging process can be accelerated when the device **1** transmits the terminal clock information in the response to the device **2** scan of the device **1** tag information. Where the terminal clock time is provided with the tag information, the paging operation scan eliminates the random backup time and the master slave switch time, as described in Bray, et al., supra.

[0112] **FIG. 11** describes a service scenario **1100** for a cash register transaction initiated by the terminal **102**, according to one embodiment of the invention.

[0113] In step **1**, the terminal **1102** is subjected to a RF field by a reader/Bluetooth access point **1104** and the Bluetooth terminal serial number and user credit card number are transferred to the reader using the RF-ID inductive coupling or electromagnetic wave propagation technology previously described in conjunction with **FIGS. 2, 3** and **4**.

[0114] In step **2**, the terminal user identification and serial number are used by the access point in a paging operation to establish a session with the terminal.

[0115] In step **3**, the access point pushes a PIN request to the terminal over the air-link interface. The PIN request may contain more information about the payment transaction.

For example, the quantities, type and cost of the merchandise involved in the cash register transaction could be provided.

[0116] In step **4**, after the user has inputted the PIN number to the terminal display, the terminal sends the PIN number to the access point via the Bluetooth connection.

[0117] In step **5**, the terminal information is transferred via the access point to the cash register system for processing and completion of the transaction in step **6**.

[0118] The cash register scenario assumes a passive tag for the generation of the user identification and Bluetooth terminal serial number. A semi-passive or active tag can provide a response to the access point, including the clock information of the terminal. When the terminal clock time is provided, the access point serves as the master device and eliminates the random backup time that other wise would be required by the device in an inquiry or discovery process. Further the master-slave switch time is eliminated in establishing a logical connection between the access point and the terminal.

[0119] **FIG. 12** is a second scenario **1200** for a Bluetooth terminal user **1202** at an airline gate scenario according to one embodiment of the invention.

[0120] In step **1**, the Bluetooth terminal serial number and passenger card number are transferred to the access point **1204** using RF-ID technology, either inductive coupling or electromagnetic wave propagation coupling.

[0121] In step **2**, a Bluetooth session setup is established between the access point and the terminal using the terminal's Bluetooth serial number.

[0122] In step **3**, the user's passenger card information is transferred to a back-end system **1206**

[0123] In step **4**, the back-end system opens the gate, based upon passenger card information, and

[0124] In step **5**, the airline backend system sends the user personalized information about flight and destination via the access point-terminal session. Alternatively, the airline backend system may be adapted to serve as an access point enabling the terminal to interact directly with the backend system after establishing a session based upon inductive or electromagnetic wave propagation coupling of the terminal tag and clock information to the backend system.

[0125] Summarizing, the present invention describes a method and system for establishing a fast wireless connection between a terminal and a service application using RF-ID connectionless communication between the terminal and a RF-ID reader tag/access point. The RF-ID tag reader device supports RF-ID tag reader—RF-ID tag communication and RF-ID tag reader—RF-ID tag reader communication. The support of RF-ID tag reader—RF-ID tag reader communication is an optional feature and not mandatory for the RF-ID tag reader device according to an embodiment of the invention. The RF-ID tag functionality of the RF-ID tag reader device according to an embodiment of the invention, also referred as show communication mode, may allow for substituting RF-ID tag reader—RF-ID tag reader communication in many ranges of applications. The terminal transmits user and terminal identification plus terminal clock information to the reader/access point using inductive or electromagnetic wave propagation coupling. The access point, which can also be another mobile terminal, uses the terminal identification and clock information to establish a wireless connection to the terminal. A paging operation is established in lieu of an inquiry or discovery operation, the later shortening session set-up time and user identification by eliminating the random backup time and slave master switch time which would otherwise be required in an inquiry or discovery process in establishing a wireless connection between the terminal and the access point. The invention is applicable to Bluetooth and other wireless standards.

[0126] While the invention has been described in a preferred embodiment, various changes can be made within the skill of a worker skilled in the without departing from the spirit and scope of the present invention, as defined in the appended claims, in which,

We claim:

**1**. A method of connection establishment in a short-range wireless communication environment, comprising:

a) generating a RF-ID interrogation signal by a first terminal equipped with a RF-ID tag reader device;

b) detecting the RF-ID interrogation signal by a second terminal equipped with means to detect and respond to RF-ID interrogation signals when within the range of the RF-ID interrogation signal;

c) notifying a processor in the second terminal of the presence of the RF-ID interrogation signal for setting a short-range communication module in the second terminal into a predefined operation mode for being capable of detecting paging signals directed to the second terminal;

d) responding to the RF-ID interrogation signal by transmitting a RF-ID response signal to the first terminal including identification information relating to the short-range communication module of the second terminal;

e) processing the received RF-ID response signal by the first terminal to activate a short-range communication module in the first terminal to initiate a shortened session setup by transmitting a short-range paging signal directed to the second terminal based on information of the received RF-ID response signal to establish a short-range connection with the second terminal; and

f) detecting the paging signal by the short-range communication module in the second terminal for immediate establishment of a short-range connection between the first and second terminals.

**2**. The method of claim 1 further comprising:

g) incorporating in the second mobile terminal a RF-ID tag reader having tag functionality and terminal identification information.

**3**. The method of claim 2 further comprising:

h) switching the RF-ID tag reader in the second terminal to operate in a show communication mode and simulate a RF-ID tag device.

**4**. The method of claim 1 wherein the first and second terminals include RF-ID tag readers operating in an active mode.

**5**. The method of claim 1 wherein the RF-ID tag reader of the second terminal operates in a powered down state and passive mode.

**6**. The method of claim 4 wherein one RF-ID tag reader automatically switches to a passive state when de-energized.

**7**. The method of claim 1 wherein the short-range communication modules of the first and the second terminals conform to the principles of Bluetooth technology.

**8**. The method of claim 7 wherein the processor of the second terminal responding terminal to the second terminal informs the Bluetooth module of the second terminal to enter into a Bluetooth page scan mode after detecting an interrogation signal and responding to it with identification information of the Bluetooth communication module in order to provide a shortened device discovery and session setup between the terminals.

**9**. The method of claim 7 wherein transmitting the paging signal by the first terminal comprises transmitting by the first terminal a Bluetooth paging message to the second terminal including the Bluetooth identification information of the short-range communication module of the second terminal.

**10**. The method of claim 7, wherein the predefined operation mode of the second terminal is Bluetooth Page scanning mode.

**11**. The method of claim 7, wherein the identification information relating to the short-range communication module of the second terminal includes at least a unique Bluetooth identification number of the short-range communication module of the second terminal.

**12**. The method of claim 1, further comprising:

i) periodically updating at least portion of the identification information relating to the second terminal.

**13**. The method of claim 12, wherein the identification information relating to the short-range communication module of the second terminal includes a Bluetooth serial number and Bluetooth Clock Offset information of the short-range communication module of the second terminal.

**14**. The method of claim 1, wherein one of the terminals is a stationary access point connected to an infrastructure network enabling the other terminal to conduct transactions with service applications within the communication network through the established wireless short range connection.

**15**. The method of claim 14, wherein the infrastructure network is the Internet.

**16**. The method of claim 1, wherein the first and the second terminals are mobile terminals.

**17**. The method of claim 16 further comprising:

j) determining whether a short-range connection is acceptable.

**18**. The method of claim 17 further comprising:

k) instructing the short-range communication module to enter into a page scanning mode if the Bluetooth mode is acceptable.

**19**. Method of claim 17 further comprising:

l) instructing the short-range communication module to enter into a non-connectable connection if the Bluetooth mode is not acceptable.

**20**. Apparatus for connection establishment in a short-range wireless communication environment, comprising:

a) means for generating a RF-ID interrogation signal by a first terminal equipped with a RF-ID tag reader device;

b) means for detecting the RF-ID interrogation signal by a second terminal equipped with means to detect and respond to RF-ID interrogation signals when within the range of the RF-ID interrogation signal;

c) means for notifying a processor in the second terminal of the presence of the RF-ID interrogation signal for setting a short-range communication module in the second terminal into a predefined operation mode for being capable of detecting paging signals directed to the second terminal;

d) means in the second terminal for responding to the RF-ID interrogation signal by transmitting a RF-ID response signal to the first terminal including identification information relating to the short-range communication module of the second terminal;

e) means in the first terminal processing the RF-ID response signal to activate a short-range transceiver in the first transceiver to initiate a shortened session setup by transmitting a short-range paging signal to the second terminal based on information of the received RF-ID response signal to establish a short-range connection with the second terminal; and

f) means in the second terminal for detecting the paging signal by the short-range communication module for immediate establishment of a short-range connection between the first and second terminals.

**21**. The Apparatus of claim 20 wherein the second mobile terminal is a RF-ID tag reader having tag functionality and terminal identification information

**22**. The Apparatus of claim 20 further comprising:

g) means for switching the RF-ID tag reader in the second terminal to operate in a show communication mode and simulate a RF-ID tag device.

**23**. The Apparatus of claim 20 wherein the first and second terminals include RF-ID tag readers operating in an active mode.

**24**. The Apparatus of claim 20 wherein the RF-Tag reader of the second terminal operates in a powered down state and passive mode.

**25**. The Apparatus of claim 24 wherein one RF-Tag reader automatically switches to passive state when de-energized.

**26**. The Apparatus of claim 20 wherein the short-range communication modules of the first and second terminals conform to the principles of Bluetooth technology.

**27**. The Apparatus of claim 26 wherein the processor of the first terminal responding terminal to the second terminal informs the Bluetooth module of the first terminal to enter into a Bluetooth page scan mode after detecting an interrogation signal and responding to it with a Bluetooth communication module identification information in order to provide a shortened device discovery and session setup between the terminals.

**28**. The Apparatus of claim 26 wherein transmitting the paging signal by the first terminal comprises transmitting by the first terminal a Bluetooth paging message to the second terminal including the Bluetooth identification information of the short-range communication module of the second terminal.

**29**. The Apparatus of claim 26, wherein the predefined operation mode of the second terminal is Bluetooth Page scanning mode.

**30**. The Apparatus of claim 26, wherein the identification information relating to the short-range communication module of the second terminal includes at least a unique Bluetooth identification number of the short-range communication module of the second terminal.

**31**. The Apparatus of claim 20, further comprising:

h) means periodically updating at least portion of the identification information relating to the second terminal.

**32**. The Apparatus of claim 31, wherein the identification information relating to the short-range communication module of the second terminal includes a Bluetooth serial number and Bluetooth Clock Offset information of the short-range communication module of the second terminal.

**33**. The Apparatus of claim 20, wherein one of the terminals is a stationary access point connected to an infrastructure network enabling the other terminal to conduct transactions with service applications within the communication network through the established wireless short range connection.

**34**. The Apparatus of claim 33 wherein the infrastructure network is the Internet.

**35**. The Apparatus of claim 20, wherein the first and the second terminals are mobile terminals.

**36**. The Apparatus of claim 20 further comprising:

i) determining means determining whether a short-range connection is acceptable.

**37**. The Apparatus of claim 36 further comprising:

j) instructing means instructing the short-range communication module to enter into a page scanning mode if the Bluetooth mode is acceptable.

**38**. The apparatus of claim 37 wherein the instructing means instructs the short-range communication module to enter into a non-connectable connection if the Bluetooth mode is not acceptable

**39**. The Apparatus of claim 20 wherein the RF-ID tag reader comprises:

k) a radio frequency interface and an antenna; and

l) an associated logic unit, which is connectable to the radio frequency, interface where the associated logic unit is operable in a transponder operation mode, in which the reader device acts as radio frequency identification transponder.

**40**. The Reader device according to claim 20 which comprises a reader logic unit, which is connected to said radio frequency interface and which allows for operating said reader operation mode.

**41**. The Reader device according to claim 40, wherein said transponder operation mode is operable independently from any power supply.

**42**. The Reader device according to claim 20 or claim 21 wherein said reader device is adapted to operate as a passive radio frequency identification transponder in said transponder operation mode.

**43**. The Reader device according to claim 40, wherein said reader device acts as a passive read-only radio frequency identification transponder in said transponder operation mode.

**44**. The Reader device according to claim 40, wherein said transponder logic unit comprises a transponder memory.

**45**. The Reader device according to claim 44 wherein said transponder memory is non-volatile.

**46**. The Reader device according to claim 45 wherein said transponder memory is configurable.

**47**. The Reader device according to claim 40, wherein said transponder logic unit is coupled through a switch unit to said radio frequency interface, wherein said switch unit is operable to select between said reader operation mode and said transponder operation mode.

**48**. The Reader device according to claim 40 wherein said reader device operates autonomously in said transponder operation mode during periods of time, within which said reader device is not energized.

**49**. The Reader device according to claim 40, wherein said radio frequency interface is adapted to provide signals required for operation of said reader device in said reader operation mode and said transponder operation mode.

**50**. The Reader device according to claim 40, wherein said reader device supports near field communication (ECMA-340) standard, wherein said reader device is operable with a passive communication mode in said reader operation mode, wherein said reader device is operable with a show communication mode in said transponder operation mode.

**51**. The Reader device according to claim 40 wherein said reader device is operable with an active communication mode in said reader operation mode.

**52**. A portable electronic device, which is, connected to a reader device for radio frequency identification transponders, wherein said reader device comprises:

a) a radio frequency interface and an antenna such that said reader device is adapted to communicate at least with said radio frequency identification transponders in a reader operation mode; and

b) an associated transponder logic unit which is connectable to said radio frequency interface, wherein said transponder logic unit (is operable in a transponder operation mode, in which said reader device acts as a radio frequency identification transponder.

**53**. The portable terminal according to claim 52, wherein said reader device is a reader device according to claim 39.

**54**. The portable terminal according to claim 52, wherein said portable electronic device is enabled to communicate via a public land mobile network.

**55**. A system including a portable electronic device and a reader device for radio frequency identification transponders, which is connected to said portable electronic device, wherein said reader device comprises:

a) a radio frequency interface and an antenna such that said reader device is adapted to communicate at least with said radio frequency identification transponders in a reader operation mode; and

b) a transponder logic unit, which is connected/to, said radio frequency interface, wherein said transponder logic unit is operable in a transponder operation mode, in which said reader device acts as a radio frequency identification transponder.

* * * * *