IN THE UNITED STATES DISTRICT COURT
FOR THE WESTERN DISTRICT OF TEXAS
WACO DIVISION

PROXENSE, LLC, Plaintiff, v. MICROSOFT CORPORATION, Defendant.	Case No. 6:23-cv-00319-ADA

MICROSOFT CORPORATION'S OPENING CLAIM CONSTRUCTION BRIEF

TABLE OF CONTENTS

Page(s)

I. INTRODUCTION 1

II. LEGAL STANDARD 1

III. AGREED CONSTRUCTIONS 2

IV. THE ASSERTED PATENTS 2

A. Biometric Authentication Patents 2

B. Hybrid Device Patents 3

V. DISPUTED CLAIM TERMS 3

A. "access message" ('730 Patent, claims 1, 15; '954 Patent, claim 1; '905 Patent, claim 1) 3

B. "wherein the biometric data and the scan data are both based on a fingerprint scan by the user" ('730 Patent, claim 5) 7

C. "personal digital key" or "PDK" ('042 Patent, claim 10) 11

D. "receiver-decoder circuit" or "RDC" ('042 Patent, claim 10; '289 Patent, claims 14 and 16) 17

VI. CONCLUSION 21

APPLE EXHIBIT 1046
APPLE v. PROXENSE
IPR2024-00783

TABLE OF AUTHORITIES

Cases **Page(s)**

Allergan Sales, LLC v. Sandoz, Inc.,
935 F.3d 1370 (Fed. Cir. 2019).....1

Cdn Innovations v. Grande Communs. Networks,
No. 4:20-CV-653-SDJ, 2021 WL 3615908 (E.D. Tex. Aug. 13, 2021).....4

Central Admixture Pharmacy Services, Inc. v. Advanced Cardiac Solutions, P.C.,
482 F.3d 1347, 82 U.S.P.Q.2d 1293 (Fed. Cir. 2007), *cert. denied*, 128 S. Ct. 648 (U.S. 2007).....18

Eon-Net LP v. Flagstar Bancorp,
653 F.3d 1314 (Fed. Cir. 2011).....13

Exxon Chem. Patents, Inc. v. Lubrizol Corp.,
64 F.3d 1553 (Fed. Cir. 1995).....18

Goldenberg v. Cytogen, Inc.,
373 F.3d 1158 (Fed. Cir. 2004).....11

Howmedica Osteonics Corp. v. Zimmer, Inc.,
822 F.3d 1312 (Fed. Cir. 2016).....12

Huawei Techs. Co. v. T-Mobile US, Inc.,
No. 2.16-CV-00055 JRG(RSP), 2017 WL 2190103 (E.D. Tex. May 17,2017).....7

Indacon, Inc. v. Facebook, Inc.,
824 F.3d 1352 (Fed. Cir. 2016).....11

Lexion Medical, LLC v. Northgate Techs., Inc.,
641 F.3d 1352 (Fed. Cir. 2011).....1

Multilayer Stretch Cling Film Holdings, Inc. v. Berry Plastics Corp.,
831 F.3d 1350 (Fed. Cir. 2016).....8, 10

Nevro Corp. v. Boston Sci. Corp.,
955 F.3d 35 (Fed. Cir. 2020).....17

Pfizer, Inc. v. Ranbaxy Labs. Ltd.,
457 F.3d 1284 (Fed. Cir. 2006).....7

Phillips v. AWH Corp.,
415 F.3d 1303 (Fed. Cir. 2005).....2, 11

Praxair, Inc. v. ATMI, Inc.,
543 F.3d 1306 (Fed. Cir. 2008).....16

APPLE EXHIBIT 1046
APPLE v. PROXENSE
IPR2024-00783

Renishaw PLC v. Marposs Societa' per Azioni,
158 F.3d 1243 (Fed. Cir. 1998).....12

Wi-LAN USA, Inc. v. Apple Inc.,
830 F.3d 1374 (Fed. Cir. 2016).....4, 13

Statutes

35 U.S.C. § 112 ¶ 4.....7, 10

APPLE EXHIBIT 1046
APPLE v. PROXENSE
IPR2024-00783

TABLE OF EXHIBITS

Ex. No.	Description
Ex. A	2023-10-02 Email from counsel for Proxense regarding claim construction
Ex. B	Excerpts from the file history for U.S. Patent No. 8,352,730
Ex. C	Excerpts from the file history for U.S. Patent No. 8,886,954

APPLE EXHIBIT 1046
APPLE v. PROXENSE
IPR2024-00783

I. INTRODUCTION

Plaintiff Proxense, LLC ("Proxense") asserts six patents, which can be categorized into two groups: (1) the "Biometric Authentication Patents," which consist of U.S. Patent Nos. 8,352,730, 8,886,954, and 9,298,905 and (2) the "Hybrid Device Patents," which consist of U.S. Patent Nos. 8,646,042, 9,679,289, and 10,073,960. Several of the disputes as to the scope of the terms arise from infringement allegations against an unspecified group of Defendant Microsoft Corporation's ("Microsoft") offerings and various third-party offerings that are unrelated to Microsoft.[1]

II. LEGAL STANDARD

Claim terms should be "given their ordinary and customary meaning," defined as "the meaning that the term would have to a person of ordinary skill in the art in . . . question at the time of the invention." *Allergan Sales, LLC v. Sandoz, Inc.*, 935 F.3d 1370, 1373 (Fed. Cir. 2019) (quoting *Phillips v. AWH Corp.*, 415 F.3d 1303, 1312-13 (Fed. Cir. 2005)). "The words used in the claims are interpreted in light of the intrinsic evidence of record, including the written description, the drawings, and the prosecution history." *Id.* (quoting *Teleflex, Inc. v. Ficosa N. Am. Corp.*, 299 F.3d 1313, 1324 (Fed. Cir. 2002) (brackets omitted)); *see also Lexion Medical, LLC v. Northgate Techs., Inc.*, 641 F.3d 1352, 1356 (Fed. Cir. 2011) (stating that the meaning of a disputed claim term "should be harmonized, to the extent possible, with the intrinsic record, as understood within the technological field of the invention"). "The construction that stays true to the claim language and most naturally aligns with the patent's description of the invention will be,

[1] Proxense's failure to define the Accused Product(s), as well as its violation of the fundamental rule prohibiting divided infringement, are discussed in Microsoft's Motion to Dismiss for Failure to State a Claim (Dkt. No. 21) and its reply in support thereof (Dkt. No. 26).

APPLE EXHIBIT 1046
APPLE v. PROXENSE
IPR2024-00783

in the end, the correct construction." *Phillips*, 415 F.3d at 1316 (quoting *Renishaw PLC v. Marposs Societa' per Azioni*, 158 F.3d 1243, 1250 (Fed. Cir. 1998)).

III. AGREED CONSTRUCTIONS

The parties agree upon the following constructions:

Term	Patents	Agreed-Upon Construction
"ID code" or "device ID code"	'730 Patent, claims 1, 3, 15; '954 Patent, claims 1, 3; '905 Patent, claims 1, 2	"a unique code identifying a device"
"hybrid device"	'042 Patent, claim 10; '289 Patent, claims 14, 16	"a device comprising an integrated personal digital key (PDK) and an integrated receiver-decoder circuit"

Proxense stated that it: "does not believe any additional terms need to be construed and adopts the Court's prior constructions for terms that have been previously construed by this Court in the Proxense, LLC v. Samsung et. al [*sic*] litigation." Ex. A. For these two terms, Microsoft's proposed constructions align with the Claim Construction order from *Proxense, LLC v. Samsung Electronics Co., Ltd. et al.*, 6:21-cv-00210-ADA (W.D. Tex.) ("*Proxense/Samsung*"), Dkt. No. 43 (Claim Construction Order). Hence, these terms are not disputed.

IV. THE ASSERTED PATENTS

A. Biometric Authentication Patents

This first group of asserted patents relate to biometric authentication: U.S. Patent Nos. 8,352,730 (the "'730 Patent"), 8,886,954 (the "'954 Patent"), and 9,298,905 (the "'905 Patent") (collectively, the "Biometric Authentication Patents"). This Court has previously construed several terms for U.S. Patent Nos. 8,352,730 (the "'730 Patent") and 9,298,905 (the "'905 Patent") in *Proxense/Samsung*.

The Biometric Authentication Patents relate generally to "computerized authentication" using biometric data. '730 Patent at 1:15–18; '954 Patent at 1:19–22; '905 Patent at 1:21–24. The

APPLE EXHIBIT 1046
APPLE v. PROXENSE
IPR2024-00783

patents generally disclose a distributed form of biometric authentication involving biometric key that persistently stores biometric data in a tamper-resistant format, a scanner that collects biometric data from a user, and an integrated device that compares the scan against the biometric data and sends a code, for example to an application, to indicate that the user was successfully verified. '730 Patent at 1:59–67; '954 Patent at 2:4–12; '905 Patent at 2:6–14.

B. Hybrid Device Patents

The second group of asserted patents relate to hybrid devices: U.S. Patent Nos. 8,646,042 (the "'042 Patent"), 9,679,289 (the "'289 Patent"), and 10,073,960 (the "'960 Patent") (collectively, the "Hybrid Device Patents"). The disputed terms appear in the asserted claims of the '042 and '289 Patents. This Court previously construed terms in related patents, U.S. Patent Nos. 9,049,188 (the "'188 Patent") and 9,235,700 (the "'700 Patent") in *Proxense/Samsung*, but has not construed terms in the asserted Hybrid Device Patents.

These patents generally relate "to a hybrid device including a personal digital key (PDK) and a receiver-decoder circuit (RDC) and methods for using same." '042 Patent at 1:21–27; '289 Patent at 1:44–52. The patents disclose "[p]roximity sensors and location tracking," where "proximity sensors can be used to provide secure access to physical and/or digital assets, based on biometrics, passwords, PINs, or other types of authentication." '042 Patent at 1:30–33; '289 Patent at 1:55–58.

V. DISPUTED CLAIM TERMS

A. "access message" ('730 Patent, claims 1, 15; '954 Patent, claim 1; '905 Patent, claim 1)

Microsoft's Construction	Proxense's Construction
"a message enabling access"	Adopts the *Proxense/Samsung* Claim Construction Order: "A signal or notification enabling or announcing access"

APPLE EXHIBIT 1046
APPLE v. PROXENSE
IPR2024-00783

Microsoft's proposed construction stays true to the claim language in which "access message" appears and the description in the specification. Microsoft proposes the natural reading of the "access message," which is a message that itself enables access. Whereas Proxense, proposes that "access message" variably consists of different data and functions, such as a "signal or notification" (instead of, simply, "message") that either "enable[es]" or "announces" access to the application, which receives the access message. In one instance, it functions as a key to gain access, in the other it functions as an alert to say that access has already been obtained.

The claim language of the '730 Patent expressly and repeatedly describes the access message as "allowing the user access to an application." '730 Patent at claims 1 ("receiving an access message from the agent allowing the user access to an application"), 8 ("receives an access message from the agent allowing the user access to an application"), 12 ("in response to a positive access message, allowing the biometrically verified user access to an application"), 15 ("the authentication unit receiving an access message from the agent allowing the user to access an application"). This mirrors the description of "access message" in the specifications of the Biometric Authentication Patents. '730 Patent at 7:18–19 ("an access message to the application to allow user access"); '954 Patent at 8:12–14 (same); '905 Patent at 8:15–17 (same). Because the '730 Patent describes "access message" in only one manner in the entire specification (and the '954 and '905 Patents mention "access message" only one additional time, in the Abstract), that description should weigh heavily during construction. *See, e.g.*, *Wi-LAN USA, Inc. v. Apple Inc.*, 830 F.3d 1374, 1382 (Fed. Cir. 2016) ("Consistent use of a term in a particular way in the specification can inform the proper construction of that term."); *Cdn Innovations v. Grande Communs. Networks*, No. 4:20-CV-653-SDJ, 2021 WL 3615908, at *5 (E.D. Tex. Aug. 13, 2021) (quoting *Vitronics Corp. v. Conceptronic, Inc.*, 90 F.3d 1576, 1582 (Fed. Cir. 1996)) (finding that

APPLE EXHIBIT 1046
APPLE v. PROXENSE
IPR2024-00783

"[t]he specification is 'always highly relevant to the claim construction analysis' and is usually 'dispositive'" and that "[t]he specification 'is the single best guide to the meaning of a disputed term.'"). Moreover, although not in the context of "access message" specifically, the specification describes sending a "message to [the] application 330, or otherwise allow[ing] access to the application" that is "responsive to a successful authentication by trusted key authority 320." '730 Patent at 5:23–26; '954 Patent at 6:15–17; '905 Patent at 6:17–19. Notably, however, the specification does not describe sending a message to the application, or otherwise "announcing" access to the application, in a way that offers any support to Proxense's construction.

Microsoft's construction is also consistent with the only depiction of "access message" in the figures of the Biometric Authentication Patents.

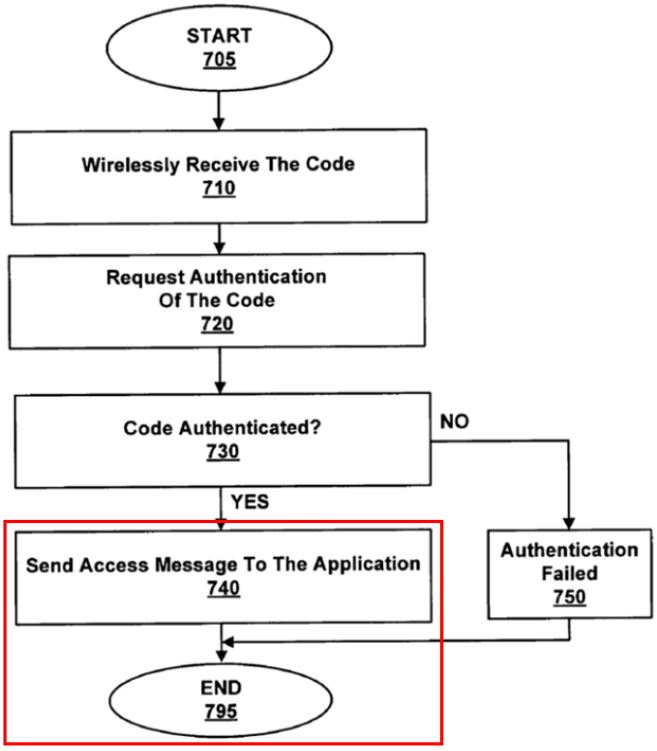

FIG. 7

'730 Patent at Fig. 7 (red box added); *see also* '954 Patent at Fig. 7; '905 Patent at Fig. 7. As shown, sending an "Access Message" (740) is right above "END" (795). *See also* '730 Patent at

7:18–23 ("If authentication is successful, the trusted key authority sends an access message to the application to allow user access . . . If authentication is not successful, authentication fails 750 and the message to the application indicates that the user should be denied access."); '954 Patent at 8:12–17; '905 Patent at 8:15–20. There is no indication of another function, such as sending a signal/notification announcing access.

Further, Proxense's proposed construction is illogical, as it calls for "announcing access" without requiring granting access. There is no alternate signal that Proxense proposes as the message enabling access, other than "access message." So if, as Proxense proposes, "access message" can be either a "signal or notification ***enabling*** access" or a "signal or notification ***announcing*** access," then, in instances where "access message" acts as an announcement, there would be no signal that enables access—making that announcement incorrect. Nor is there any support to add an "announcing" function on top of the enabling function when "access message" enables access. Indeed, "announcing access" is an addition that Proxense seeks to introduce to this claim term without support. In other words, Proxense's construction, which adds an additional function of "announcing" access, is not only unsupported by the specification, but logically incompatible with the sequence of events as outlined by the claims and the specification.

The Applicant's statements during prosecution are also informative. During the prosecution of the '730 and '954 Patents, the Applicant stated that the user is allowed access upon receipt of an access message. *See* Ex. B ('730 Patent File History) at 9 (Resp. to July 7, 2010 Office Action) ("The user is ***allowed access responsive to receipt of an access message*** from the agent that authenticates the code."); Ex. C ('954 Patent File History) at 12 (Resp. to June 13, 2013 Office Action) ("The user is ***allowed access responsive to receipt of an access message*** from the

APPLE EXHIBIT 1046
APPLE v. PROXENSE
IPR2024-00783

agent that authenticates the code.").[2] In contrast, a message, signal, or notification "announcing access" was never discussed.

Proxense's proposed construction of "a signal or notification enabling or announcing access" is unsupported by the intrinsic record. The terms "notification" (or "notice") and "announcing" (or "announce") are not found in the '730, '954, or '905 Patents. Although the word "signal" appears in the specification, it is never used to describe the "access message."

Therefore, the term "access message" should be construed to mean "message enabling access."

B. "wherein the biometric data and the scan data are both based on a fingerprint scan by the user" ('730 Patent, claim 5)

Microsoft's Construction	Proxense's Construction
Invalid under 112 ¶ 4	Adopts the *Proxense/Samsung* Claim Construction Order: No construction needed, plain and ordinary meaning.

Claim 5, which is dependent on claim 1, is invalid under 35 U.S.C. § 112 ¶ 4, because it improperly broadens the closed Markush grouping set forth in claim 1. § 112 ¶ 4 provides: "a claim in dependent form shall contain a reference to a claim previously set forth and specify a ***further limitation*** of the subject matter claimed." Even when "attempting to claim what might otherwise have been patentable subject matter" if "all the limitations of the claim to which it refers" are not present, that claim is invalid. *Pfizer, Inc. v. Ranbaxy Labs. Ltd.*, 457 F.3d 1284, 1291-93 (Fed. Cir. 2006), *accord Huawei Techs. Co. v. T-Mobile US, Inc.*, No. 2.16-CV-00055 JRG(RSP), 2017 WL 2190103, at *28 (E.D. Tex. May 17, 2017) (invalidating claim under §112 ¶ 4 at claim construction). Here, dependent claim 4 attempts to broaden the scope of the closed group in its

[2] All emphases in quoted language have been added, unless otherwise indicated.

APPLE EXHIBIT 1046
APPLE v. PROXENSE
IPR2024-00783

parent claim, which precludes claim 4 from being narrower than claim 1. Where the referenced claim excludes a limitation, while the dependent claim includes it, that dependent claim is invalid. *See Multilayer Stretch Cling Film Holdings, Inc. v. Berry Plastics Corp.*, 831 F.3d 1350, 1362 (Fed. Cir. 2016).

Generally, the use of a Markush group and the language "consisting of" provides a strong presumption of a closed group. *Multilayer Stretch Cling Film Holdings, Inc. v. Berry Plastics Corp.*, 831 F.3d 1350, 1358 (Fed. Cir. 2016) ("claim drafters often use the term 'group of' to signal a Markush group." "Use of the transitional phrase 'consisting of' to set off a patent claim element creates a very strong presumption that that claim element is 'closed' and therefore 'exclude[s] any elements, steps, or ingredients not specified in the claim.'"). Here, both factors are present in claim 1 and there is nothing in the specification or prosecution that would alter the very strong presumption that this group is closed. In fact, this Court has previously found that "Claim 1's limitation 'wherein the biometric data is selected from a group consisting of a palm print, a retinal scan, an iris scan, a hand geometry, a facial recognition, a signature recognition and a voice recognition' is a closed Markush group." *See Proxense v. Samsung*, Case No. 6:21-cv-00210-ADA, Dkt. No. 149 (Memorandum in Support of Claim Construction Order) at 23-24 (W.D. Tex. Dec. 28, 2022).

Claim 1 of the '730 Patent reads, in relevant part: "wherein the biometric data is selected from a group ***consisting of*** a **palm print**, a **retinal scan**, an **iris scan**, a **hand geometry**, a **facial recognition**, a **signature recognition** and a **voice recognition**." The claimed list does not include fingerprints. But claim 5, which depends on claim 1, states: "5. The method of claim 1, wherein the biometric data and the scan data are both based on a **fingerprint scan** by the user." This impermissibly attempts to expand the scope of the dependent claim beyond the categories

APPLE EXHIBIT 1046
APPLE v. PROXENSE
IPR2024-00783

disclosed in claim 1. A "fingerprint scan" of claim 5 is not a subpart or otherwise included in any of the terms in the closed Markush Group in claim 1 of the '730 Patent. Nor is "fingerprint" a subset of "palm print," "hand geometry," or any other "biometric data" listed for claim 1. The specification distinguishes "palm print" and "hand geometry" as "other embodiments" from a "fingerprint." *See* '730 Patent at 3:4–11 ("[a]lthough the embodiments below are described ***using the example of biometric verification using a fingerprint***, ***other embodiments*** . . . ***can include a palm print, a retinal scan, an iris scan, hand geometry recognition, facial recognition, signature recognition, or voice recognition***.").

Further, in the related '905 and '954 Patents (the other two patents in the Biometric Authentication Patent group), Proxense specifically included "fingerprint" in addition to "palm print" and "hand geometry," as shown below:

Patent	Exemplary Claim
U.S. Patent No. 8,352,730	Claim 1: "wherein the biometric data is selected from a group consisting of a palm print, a retinal scan, an iris scan, a hand geometry, a facial recognition, a signature recognition and a voice recognition." [***no mention of "fingerprint"***]
U.S. Patent No. 8,886,954	Claim 5: "The method of claim 1, wherein the biometric data includes one or more of a ***fingerprint***, palm print, a retinal scan, an iris scan, a hand geometry, a facial recognition, a signature recognition and a voice recognition."
U.S. Patent No. 9,298,905	Claim 4: "The method of claim 1, wherein the biometric data includes data from one or more of a ***fingerprint***, palm print, a retinal scan, an iris scan, a hand geometry, a facial recognition, a signature recognition and a voice recognition."

Clearly, by including "fingerprint" in addition to "palm print" and "hand geometry" for the '954 and '905 Patents, Proxense's Markush groupings recognize that fingerprint is a separate and distinct limitation that is not a palm print or hand geometry.

Finally, the Federal Circuit has found that a claim that attempts to improperly broaden the scope of a closed Markush Group renders that claim indefinite. *See, e.g.*, *Multilayer*, 831 F.3d at 1356 (affirming the district court's finding that claim was indefinite because it "attempts to improperly broaden the scope of the closed Markush Group in element (b) of Claim 1"). In *Multilayer*, the court found that claim 10, which depended on claim 1, required "at least one said inner layer comprises low density polyethylene homopolymers." *Id*. Claim 1, in turn, required the inner layer to "be[] selected from the group consisting of linear low density polyethylene, very low density polyethylene, ultra low density polyethylene, and metallocene-catalyzed linear low density polyethylene resins." *Id*. at 1353. Because claim 10's "low density polyethylene homopolymers" was not listed in the closed Markush group in claim 1 and because it was "distinct from the four resins" recited in claim 1, the Federal Circuit affirmed the district court's finding that claim 10 was indefinite. *Id*. at 1356. Similarly, here, claim 5 requires the biometric data to be a "fingerprint scan," which is not listed in the closed Markush group in claim 1 (which consists only of "a palm print, a retinal scan, an iris scan, a hand geometry, a facial recognition, a signature recognition, and a voice recognition"). *See* '730 Patent at claims 1, 5. Thus, by claiming a type of biometric data outside of this group, dependent claim 5 fails to further limit claim 1, rendering it invalid under Section 112 ¶ 4.

Given the broadening of the Markush group in claim 1 to include the term "fingerprint," Proxense should not be allowed "to recapture through litigation what the patentees forfeited during patent prosecution" and must instead "deal with the consequence of the patentee's decision to add a Markush group to claim 1." *See Endo Pharm. Inc. v. Watson Labs., Inc*., C.A. No. 10-138 (GMS), Dkt. No. 92 at 1–2 n. 1 (D. Del. June 27, 2011).

APPLE EXHIBIT 1046
APPLE v. PROXENSE
IPR2024-00783

C. "personal digital key" or "PDK" ('042 Patent, claim 10)

Microsoft's Construction	Proxense's Construction
"a device that includes an antenna, a transceiver for communicating with the RDC and a controller and memory for storing information particular to a user"	Adopts the *Proxense/Samsung* Claim Construction Order re the '188 and '700 Patents: "An operably connected collection of elements including an antenna and a transceiver for communicating with a RDC and a controller and memory for storing information particular to a user

The Parties do not dispute that a "personal digital key" or "PDK" in the '042 Patent includes an antenna, a transceiver for communicating with the RDC and a controller, and memory for storing information particular to a user. The dispute is whether a PDK is "a device" or is "[a]n operably connected collection of elements." Based on the intrinsic evidence, "PDK" is plainly a device. The Court previously construed this term in *Proxense/Samsung* for the '188 and '700 Patents, which were later dismissed by Proxense and not asserted in this case. Microsoft respectfully requests reconsideration of this term based on the additional evidence and argument presented herein.

The claim language supports construing "PDK" as a device. *See Phillips*, 415 F.3d at 1314 ("[T]he context in which a term is used in the asserted claim can be highly instructive."). As an initial matter, "PDK" was coined by the inventor and not a term of art, and "[w]here a claim term has no ordinary and customary meaning, a court must resort to the remaining intrinsic evidence . . . to obtain the meaning of that term." *Goldenberg v. Cytogen, Inc.*, 373 F.3d 1158, 1164 (Fed. Cir. 2004); *see also Indacon, Inc. v. Facebook, Inc.*, 824 F.3d 1352, 1357 (Fed. Cir. 2016) (terms with no established meaning "ordinarily cannot be construed broader than the disclosure in the specification"). Claim 10 reads:

APPLE EXHIBIT 1046
APPLE v. PROXENSE
IPR2024-00783

10. A method comprising:

> creating a first wireless link between an integrated receiver-decoder circuit (RDC) of a hybrid device and ***an external personal digital key (PDK)***, the hybrid device including ***an integrated PDK*** and the integrated RDC;
>
> receiving a first signal at the integrated RDC via the first wireless link from ***the external PDK***;
>
> generating an enablement signal enabling one or more of an application, a function and a service on one or more of the hybrid device and a device associated with an external RDC; and
>
> sending the enablement signal to one or more of the hybrid device and the device associated with an external RDC.

'042 Patent at claim 10. As used in claim 10, a PDK is a device that may be "integrated" with a hybrid device or be an "external" device. Either way, the claim's usage of "PDK" is consistent with the view that a PDK is a discrete device that is physically intact, not merely a collection of disparate elements. For example, if PDK is a collection of elements, the distinction between an "external PDK" and "integrated PDK" would be muddled, because different "elements" can be simultaneously external to, and integrated in, another device. The "wireless link" is also recited as begin "from the external PDK," as opposed to some component that is a part of the PDK. The plain reading of claim 10 supports a PDK as a device, rather than a collection of elements.

The specification also repeatedly and consistently describes PDK as a device, not an amorphous collection. A person of ordinary skill in the art "would naturally look to the written description for a full understanding of the claims." *Howmedica Osteonics Corp. v. Zimmer, Inc.*, 822 F.3d 1312, 1322 (Fed. Cir. 2016); *Renishaw PLC v. Marposs Societa' per Azioni*, 158 F.3d 1243, 1250 (Fed. Cir. 1998) ("The construction that stays true to the claim language and most naturally aligns with the patent's description of the invention will be, in the end, the correct construction."). The '042 Patent's abstract states: "[t]he hybrid device operates in one of several modes including, PDK only, RDC only, or PDK and RDC." '042 Patent at Abstract. Hence, the

APPLE EXHIBIT 1046
APPLE v. PROXENSE
IPR2024-00783

disclosed hybrid device includes a mode where PDK can function by itself. And the body of the specification repeatedly confirms that PDK is a device. *See, e.g.*, '042 Patent at 3:48–50 ("***The PDK 102*** is a compact, ***portable*** uniquely identifiable wireless ***device*** typically ***carried*** by an individual."); 5:44–45 ("***The PDK 102*** can be ***standalone*** as a portable, ***physical device*** or can be ***integrated into*** commonly ***carried items***"); 17:63–64 ("[A] ***PDK*** 102 *b* operating as the first ***device*** . . . ."). This further comports with the invention's focus on proximity detection and location determination. *See, e.g.*, '042 Patent at 1:20–67. These descriptions show that the PDK is a device, whether it be standalone or integrated into another device and the consistent description of PDK as a device supports construing it as a device. *See Wi-LAN USA, Inc. v. Apple Inc.*, 830 F.3d 1374, 1382 (Fed. Cir. 2016) ("Consistent use of a term in a particular way in the specification can inform the proper construction of that term."); *Eon-Net LP v. Flagstar Bancorp*, 653 F.3d 1314, 1321 (Fed. Cir. 2011) (limiting claim terms "document" and "file" to "information that originates from a hard copy document" where "[t]he written description repeatedly and consistently defines the invention as a system that processes information derived from hard copy documents.").

The specification also describes the portability of the PDK, which makes sense, given that it is a ***Personal*** Digital Key meant to be carried by a person. The specification's descriptions of the PDK's portability are consistent with the understanding that a PDK is a singular device that can be easily carried by a person, rather than a "collection of elements." *See, e.g.*, '042 Patent at 3:48–50 ("The PDK 102 is a compact, portable uniquely identifiable wireless device ***typically carried by an individual***."); 12:26–28 ("In the example, ***a user carrying a PDK*** is located within a service oriented business, such as a department store, casino, restaurant, etc."); 14:36–39 ("The SIM content (Cell phone account, contact information, and credit card information) that is normally stored in the cell phone 1202 is instead stored in the PDK 102 *b* ***carried by the user***");

APPLE EXHIBIT 1046
APPLE v. PROXENSE
IPR2024-00783

14:65–66 ("This allows ***any person that carries a PDK*** 102 with credit card information store thereon . . . ."); 15:21–24 ("The above application/configuration makes cell phones generic allowing any subscriber ***carrying a PDK*** 102 with either a cell phone account or credit account to acquire any phone and start using it."); 16:51–55 ("When the child walks up to the counter to make the purchase, he/she is identified by their personal ID (included on PDK 102 *a* of the hybrid device 1102 and transmitted to the RDC 304 *b*) and their account is opened"); 17:15–17 ("A user ***carrying a PDK*** 102 *b* with the correct privileges must also be present to gain access to the computer."); 19:26–28 ("The first user has and is ***in possession of the PDK*** 102 *b*, and the second user has and is in possession of the hybrid device 1102 *b*.").

The specification additionally describes various functionalities of a PDK that is tied to its physical portability. *See, e.g.*, '042 Patent at 20:11–13 ("When the parent and the PDK 102 *b* leave the room, the child's hybrid device 1102 *b* loses the privileges"); 9:1–3 ("The presence of the PDK 102 within a microcell indicates proximity of the PDK to that particular sensor"); 6:42–45 ("A biometric profile, for example, includes profile data representing physical and/or behavioral information that can uniquely identify the PDK owner"); 8:32–33 ("When the PDK 102 is brought in close proximity, the credit card terminal 108 attaches to the PDK 102."). A person would carry around PDK as an intact device, which is what the '042 Patent discloses. However, under the Proxense proposals, if a PDK is a collection of elements, it would describe a loose collection of pieces that may separate, and contrary to the disclosures requiring portability.

Further, a PDK's proximity or location must also be discernable, which only makes sense if it is a singular device, rather than a collection of elements, which could be in multiple locations at once. *See, e.g.*, '042 Patent at 10:13–15 (". . . this data to provide ***location tracking of PDKs (marked 'P')*** that are within the sensor field"); 10:17–19 ("This allows multiple applications 720

to simultaneously communicate with PDKs and make use of ***the location tracking of the PDKs***"); 10:23–24 ("Similarly, the PDK's range is shown by the heavy larger circle."); 10:37–39 ("The sensors interact with the PDK in a manner that allows the sensors to gather ***position data about the PDK***."); 11:27–29 ("For example, one application 720A might be a location tracking application with a graphical user interface that shows the ***current position or trail of the PDK***"); 11:54–56 ("Based on the type of PDK and time it is present in ***one geographical location*** . . . ."). Simply put, the specification fails to support such an enlargement of the claim scope, as there is no disclosure to support that the inventors possessed or invented such a system.

And the specification also describes that the PDK must also be able to function with or without wireless connectivity, which confirms that a PDK must be an intact device. *See, e.g.*, '042 Patent at 8:17–18 ("Alternately, the PDK may disconnect from the network or take other actions"); 14:18–20 ("The RDC 304 *a* and the PDK 102 *a* are adapted to communicate wirelessly with other devices, such as the PDK 102 *b*."). These embodiments do not make sense if the collection of elements that comprise a PDK (as Proxense appears to propose) supposedly includes embodiments where the elements are not physically connected. In such cases, lack of wireless connectivity would decouple such elements. This reading of PDK is inconsistent with the disclosures in the '042 Patent.

The figures in the '042 Patent also repeatedly and consistently depicts PDK as a device (whether as a standalone device or integrated into another device), not a collection of elements. As an example, Figure 1 is reproduced below.

APPLE EXHIBIT 1046
APPLE v. PROXENSE
IPR2024-00783

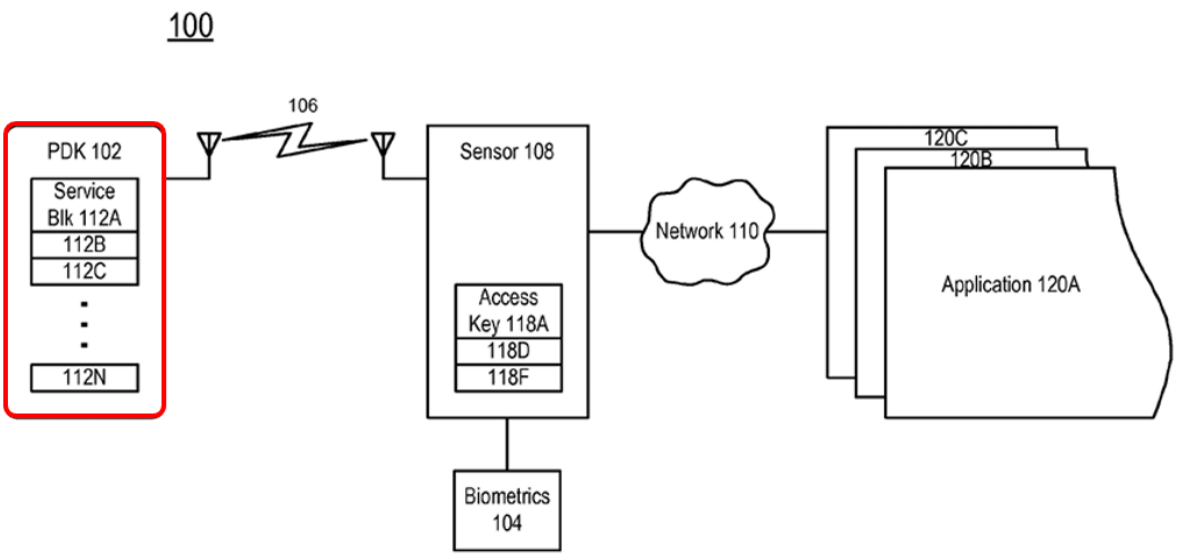

FIG. 1

'042 Patent at Fig. 1 (red box added); *see also id*. at Figs. 2–6, 11–16. And wired and wireless connections are distinctly illustrated. *See, e.g.*, *Compare* '042 Patent at Fig. 1 at 106 *to id*. at lines to/from Network 110.

Despite this clear and consistent intrinsic evidence, Proxense argues that a PDK is "[a]n operably connected collection of elements." This proposed construction improperly defies the usage of the term "PDK" throughout the '042 Patent and the descriptions of its features and functionalities in the specification, as explained above. PDK stands for ***Personal Digital Key*** and must be able to be carried by a person to be granted access (*i.e.*, to act as a key). The patent is also directed to "proximity detection/location determination" ('042 Patent at 1:22–23) which would not make sense for a "collection of elements," which can be at different locations simultaneously, as explained above. Proxense's proposed construction adds terms to avoid the patent's purpose and expand the scope of the claims beyond the patent's disclosure, which is improper. *See Praxair, Inc. v. ATMI, Inc.*, 543 F.3d 1306, 1324 (Fed. Cir. 2008) (construing "flow restrictor" to require a sufficient restriction of flow "to achieve the overall object of the invention—that is, to prevent a

hazardous release of gas"); *Nevro Corp. v. Boston Sci. Corp.*, 955 F.3d 35 (Fed. Cir. 2020) (construing "therapy signal" to include the pain-relief therapy component because the specification "consistently identif[ies] treating pain as the purpose of the claimed invention.").

Further, the '042 Patent does not use Proxense's proposed construction of "an operably connected collection of elements" or even the individual words "collection," "connected," or "operably." The PDK is never depicted as a collection of disparate or separate elements which are only connected by their operation without any physical coherence.

Finally, Proxense's proposed construction is too vague to inform a skilled artisan about what would constitute a PDK. A "collection of elements" can describe a box of parts or a bunch of random items connected wirelessly. Proxense's proposed construction reduces a PDK to its functionality. But this contradicts the '042 Patent's repeated and consistent disclosure of a PDK as a discrete physical entity, not a series of functions. This not only defies the disclosures of the '042 Patent, but it also obfuscates what a PDK even is.

Therefore, the proper construction of "personal digital key" / "PDK" is "a device that includes an antenna, a transceiver for communicating with the RDC and a controller and memory for storing information particular to a user."

D. "receiver-decoder circuit" or "RDC" ('042 Patent, claim 10; '289 Patent, claims 14 and 16)

Microsoft's Construction	Proxense's Construction
"a circuit that wirelessly receives encrypted data from the PDK and decodes it"	Adopts the *Proxense/Samsung* Claim Construction Order re the '188 and '700 Patents: "A component or collection of components, capable of wirelessly receiving data in an encrypted format and decoding the encrypted data for processing."

APPLE EXHIBIT 1046
APPLE v. PROXENSE
IPR2024-00783

The Parties do not dispute that a "receiver-decoder circuit" or "RDC" in the '042 and '298 Patents wirelessly receives encrypted data and decodes it. The Parties dispute whether: (1) the RDC is "a circuit that wirelessly receives" or "[a] component or collection of components capable of wirelessly receiving"; (2) the encrypted data is "from the PDK"; and (3) the RDC decodes "the encrypted data for processing." Similar to the dispute for "PDK," a key dispute is whether an RDC is a "a circuit" or "[a] component or collection of components." Based on plain language and intrinsic evidence, an RDC should be construed as a circuit that wirelessly receives encrypted data from the PDK and decodes it. The Court previously construed this term in *Proxense/Samsung* for the '188 and '700 Patents, which were later dismissed by Proxense but not at issue in this case. Microsoft respectfully requests reconsideration of this term based on the additional evidence and argument presented below.

Owing to its coined name, Receiver-Decoder-Circuit, the RDC is plainly a circuit, not merely a "component or collection of components." Microsoft's proposal appropriately construes an RDC as a circuit performing certain functions in relation to other recited elements of the claim, while Proxense attempts to subvert this plain reading by proposing that RDC means "[a] component or collection of components" merely capable of performing certain functions. This is improper. *See Central Admixture Pharmacy Services, Inc. v. Advanced Cardiac Solutions, P.C.*, 482 F.3d 1347, 1355, 82 U.S.P.Q.2d 1293, 1298 (Fed. Cir. 2007), *cert. denied*, 128 S. Ct. 648 (U.S. 2007) ("Claims mean precisely what they say."); *Exxon Chem. Patents, Inc. v. Lubrizol Corp.*, 64 F.3d 1553, 1563 (Fed. Cir. 1995) (Plager, J., concurring) (noting that claim language "is not a nose of wax").

APPLE EXHIBIT 1046
APPLE v. PROXENSE
IPR2024-00783

The specifications of the ’042 and ’289 Patents show RDC as a circuit, a discrete entity, rather than a collection of components. For example, RDC is depicted as a single entity in Fig. 3, reproduced below.

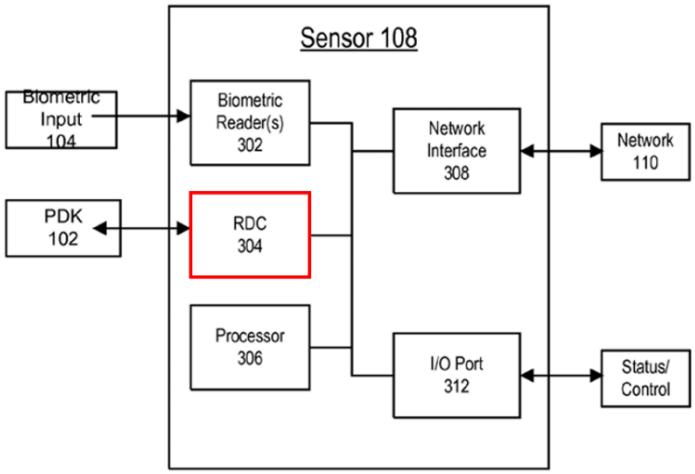

FIG. 3

’042 Patent at Fig. 3 (red box added); *see also id*. at Figs. 11–16; ’289 Patent at Figs. 3, 11–16.

The embodiments of RDC in the specifications of the ’042 and ’289 Patents also show that an RDC is a single entity (a circuit) rather than a collection of components. For example, the ’042 and ’289 Patents’ specifications describe that the RDC is connected directly to the PDK by a signal line:

> As illustrated in FIG. 11, the PDK 102 *a* is ***coupled by signal line 1104*** to the RDC 304 *a*. This ***direct coupling*** allows the PDK 102 *a* and the RDC 204 *a* to communicate control signals and data for various applications will be described below.

’042 Patent at 13:25–29; ’289 Patent at 13:66–14:3. This is shown in Fig. 11, reproduced below.

APPLE EXHIBIT 1046
APPLE v. PROXENSE
IPR2024-00783

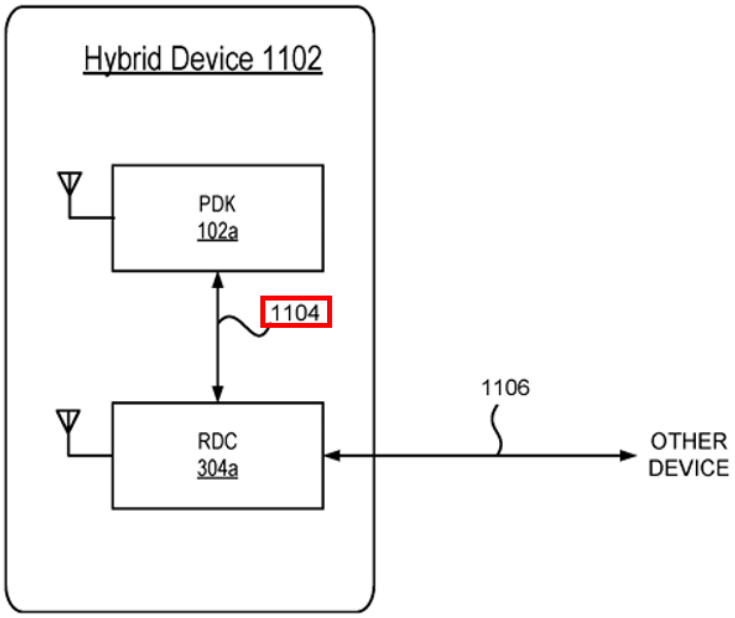

FIG. 11

'042 Patent at Fig. 11 (red box added); *see also* '289 Patent at Fig. 11. This description uses the phrase "direct coupling" by the signal line 1104, which makes sense if RDC is a singular entity, a circuit, but does not make sense if the RDC is a collection of components. If RDC was a "collection of components," multiple couplings would be needed to connect PDK with RDC. And if Proxense's proposed constructions for PDK is also incorporated, each element in the PDK's "collection of elements" would need to connect to each component in the RDC's "collection of components" for these elements/components to be "directly couple[ed]." Indeed, it would not be clear which "component" of the RDC would connect with which "element" of the PDK to constitute direct coupling. Nor do the specifications describe what such a connection would look like. Moreover, each element in the PDK would also need to be "operably coupled" to each other to form the PDK, and each component of the RDC would also need to be somehow connected with each other to form the RDC (Proxense's proposed construction does not suggest how the

components in an RDC are connected). Hence, the connections in such arrangements would not be direct and would require more than a single signal line. This is not supported by, and incongruous with, the disclosures of the '042 and '289 Patents.

Therefore, the proper construction of "receiver-decoder circuit" / "RDC" is "a circuit that wirelessly receives encrypted data from the PDK and decodes it."

VI. CONCLUSION

For the foregoing reasons, Microsoft respectfully asks the Court to adopt its proposed constructions.

Date: November 6, 2023

Respectfully submitted,

/s/ Betty Chen

Betty Chen (SBN 290588)
bchen@desmaraisllp.com
DESMARAIS LLP
101 California Street, Suite 3070
San Francisco, CA 94111
Telephone: (415) 573-1900
Facsimile: (415) 573-1901

Jason W. Wolff
CA Bar No. 215819
wolff@fr.com
FISH & RICHARDSON P.C.
12860 El Camino Real, Suite, 400
San Diego, CA 92130
Telephone: (858) 678-5070
Facsimile: (858) 678-5099

Attorneys for Defendant Microsoft Corporation

APPLE EXHIBIT 1046
APPLE v. PROXENSE
IPR2024-00783

CERTIFICATE OF SERVICE

The undersigned hereby certifies that on November 6, 2023, the foregoing document was filed electronically in compliance with Local Rule CV-5(a) and was served via CM/ECF on all counsel of record.

/s/ Betty Chen
Betty Chen

APPLE EXHIBIT 1046
APPLE v. PROXENSE
IPR2024-00783