US009049188B1

(12) **United States Patent**
Brown

(10) **Patent No.: US 9,049,188 B1**
(45) **Date of Patent: *Jun. 2, 2015**

(54) **HYBRID DEVICE HAVING A PERSONAL DIGITAL KEY AND RECEIVER-DECODER CIRCUIT AND METHODS OF USE**

(71) Applicant: **Proxense, LLC**, Bend, OR (US)

(72) Inventor: **David L. Brown**, Jupiter, FL (US)

(73) Assignee: **Proxense, LLC**, Bend, OR (US)

(*) Notice: Subject to any disclaimer, the term of this patent is extended or adjusted under 35 U.S.C. 154(b) by 0 days.

This patent is subject to a terminal disclaimer.

(21) Appl. No.: **14/171,705**

(22) Filed: **Feb. 3, 2014**

Related U.S. Application Data

(63) Continuation of application No. 13/445,825, filed on Apr. 12, 2012, now Pat. No. 8,646,042, which is a continuation of application No. 12/329,329, filed on Dec. 5, 2008, now Pat. No. 8,171,528.

(60) Provisional application No. 60/992,953, filed on Dec. 6, 2007.

(51) **Int. Cl.**
G06F 21/00 (2013.01)
H04L 29/06 (2006.01)

(52) **U.S. Cl.**
CPC ***H04L 63/08*** (2013.01)

(58) **Field of Classification Search**
USPC 726/3, 4
See application file for complete search history.

(56) **References Cited**

U.S. PATENT DOCUMENTS

4,759,060 A 7/1988 Hayashi et al.
5,187,352 A 2/1993 Blair et al.
(Continued)

FOREIGN PATENT DOCUMENTS

WO WO 00/62505 A1 10/2000
WO WO 01/22724 A1 3/2001
(Continued)

OTHER PUBLICATIONS

"Alliance Activities: Publications: Identity—Smart Card Alliance," Smart Card Alliance, 1997-2007, [online] [Retrieved on Jan. 7, 2007] Retrieved from the Internet <URL:http://www.smartcardalliance.org/pages/publications-identity>, 3 pages.
(Continued)

Primary Examiner — Jason Lee
(74) *Attorney, Agent, or Firm* — Patent Law Works LLP

(57) **ABSTRACT**

A hybrid device includes a personal digital key (PDK) and a receiver-decoder circuit (RDC). The PDK and RDC of the hybrid device are coupled for communication with each other. In one embodiment, the hybrid device also provides a physical interconnect for connecting to other devices to send and receive control signals and data, and receive power. The hybrid device operates in one of several modes including, PDK only, RDC only, or PDK and RDC. This allows a variety of system configurations for mixed operation including: PDK/RDC, RDC/RDC or PDK/PDK. The present invention also includes a number of system configurations for use of the hybrid device including: use of the hybrid device in a cell phone; simultaneous use of the PDK and the RDC functionality of hybrid device; use of multiple links of hybrid device to generate an authorization signal, use of multiple PDK links to the hybrid device to generate an authorization signal; and use of the hybrid device for authorization inheritance.

20 Claims, 15 Drawing Sheets

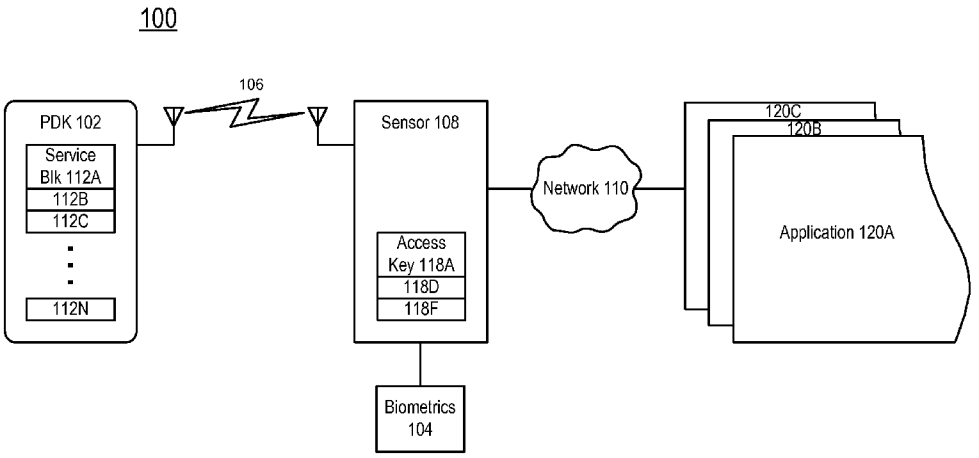

APPLE EXHIBIT 1054
APPLE v. PROXENSE
IPR2024-00783

(56) **References Cited**

U.S. PATENT DOCUMENTS

5,296,641	A	3/1994	Stelzel
5,392,433	A	2/1995	Hammersley et al.
5,422,632	A	6/1995	Bucholtz et al.
5,450,489	A	9/1995	Ostrover et al.
5,619,251	A	4/1997	Kuroiwa et al.
5,629,980	A	5/1997	Stefik et al.
5,644,354	A	7/1997	Thompson et al.
5,666,412	A	9/1997	Handelman et al.
5,773,954	A	6/1998	VanHorn
5,784,464	A	7/1998	Akiyama et al.
5,825,876	A	10/1998	Peterson, Jr.
5,857,020	A	1/1999	Peterson, Jr.
5,892,825	A	4/1999	Mages et al.
5,894,551	A	4/1999	Huggins et al.
5,898,880	A	4/1999	Ryu
5,928,327	A	7/1999	Wang et al.
5,991,399	A	11/1999	Graunke et al.
5,991,749	A	11/1999	Morrill, Jr.
6,035,038	A	3/2000	Campinos et al.
6,035,329	A	3/2000	Mages et al.
6,041,410	A	3/2000	Hsu et al.
6,055,314	A	4/2000	Spies et al.
6,070,796	A	6/2000	Sirbu
6,088,730	A	7/2000	Kato et al.
6,104,334	A	8/2000	Allport
6,110,041	A	8/2000	Walker et al.
6,148,142	A	11/2000	Anderson
6,161,179	A	12/2000	Seidel
6,209,089	B1	3/2001	Selitrennikoff et al.
6,219,109	B1	4/2001	Raynesford et al.
6,247,130	B1	6/2001	Fritsch
6,266,415	B1	7/2001	Campinos et al.
6,295,057	B1	9/2001	Rosin et al.
6,336,121	B1	1/2002	Lyson et al.
6,336,142	B1	1/2002	Kato et al.
6,367,019	B1	4/2002	Ansell et al.
6,381,747	B1	4/2002	Wonfor et al.
6,385,596	B1	5/2002	Wiser et al.
6,392,664	B1	5/2002	White et al.
6,397,387	B1	5/2002	Rosin et al.
6,401,059	B1	6/2002	Shen et al.
6,411,307	B1	6/2002	Rosin et al.
6,424,715	B1	7/2002	Saito
6,425,084	B1	7/2002	Rallis et al.
6,434,535	B1	8/2002	Kupka et al.
6,446,130	B1	9/2002	Grapes
6,463,534	B1	10/2002	Geiger et al.
6,480,188	B1	11/2002	Horsley
6,490,443	B1	12/2002	Freeny, Jr.
6,510,350	B1	1/2003	Steen et al.
6,523,113	B1	2/2003	Wehrenberg
6,529,949	B1	3/2003	Getsin et al.
6,546,418	B2	4/2003	Schena et al.
6,550,011	B1	4/2003	Sims, III
6,563,805	B1	5/2003	Ma et al.
6,564,380	B1	5/2003	Murphy
6,628,302	B2	9/2003	White et al.
6,632,992	B2	10/2003	Hasegawa
6,647,417	B1	11/2003	Hunter et al.
6,667,684	B1	12/2003	Waggamon et al.
6,683,954	B1	1/2004	Searle
6,697,944	B1	2/2004	Jones et al.
6,711,464	B1	3/2004	Yap et al.
6,775,655	B1	8/2004	Peinado et al.
6,804,825	B1	10/2004	White et al.
6,806,887	B2	10/2004	Chernock et al.
6,850,147	B2	2/2005	Prokoski et al.
6,873,975	B1	3/2005	Hatakeyama et al.
6,879,567	B2	4/2005	Callaway et al.
6,950,941	B1	9/2005	Lee et al.
6,957,086	B2	10/2005	Bahl et al.
6,973,576	B2	12/2005	Giobbi
6,975,202	B1	12/2005	Rodriguez et al.
7,012,503	B2	3/2006	Nielsen
7,159,765	B2	1/2007	Frerking
7,249,177	B1	7/2007	Miller
7,305,560	B2	12/2007	Giobbi
2002/0007456	A1	1/2002	Peinado et al.
2002/0013772	A1	1/2002	Peinado
2002/0015494	A1	2/2002	Nagai et al.
2002/0026424	A1	2/2002	Akashi
2002/0073042	A1	6/2002	Maritzen et al.
2002/0104006	A1	8/2002	Boate et al.
2002/0108049	A1	8/2002	Xu et al.
2002/0109580	A1	8/2002	Shreve et al.
2003/0055689	A1	3/2003	Block et al.
2003/0213840	A1	11/2003	Livingston et al.
2004/0129787	A1	7/2004	Saito et al.
2005/0090200	A1	4/2005	Karaoguz et al.
2005/0116020	A1	6/2005	Smolucha et al.
2006/0111955	A1	5/2006	Winter et al.
2006/0113381	A1*	6/2006	Hochstein et al. 235/382
2006/0136742	A1	6/2006	Giobbi
2006/0208066	A1*	9/2006	Finn et al. 235/380
2007/0159994	A1	7/2007	Brown et al.
2007/0174809	A1	7/2007	Brown et al.
2007/0271194	A1*	11/2007	Walker et al. 705/80

FOREIGN PATENT DOCUMENTS

WO	WO 01/75876	A1	10/2001
WO	WO 01/77790	A1	10/2001
WO	WO 2005/050450	A1	6/2005
WO	WO 2005/086802	A2	9/2005

OTHER PUBLICATIONS

Antonoff, Michael, "Visiting Video Valley," Sound & Vision, pp. 116 and 118-119, Nov. 2001.

"Applying Biometrics to Door Access," Security Magazine, Sep. 26, 2002 [online] [Retrieved on Jan. 7, 2007] Retrieved from the Internet <URL:http://www.securitymagazine.comICDA/Articles/Technologies/3ae61Oeaa34d8010VgnVCM100000f932a8cO-> 5 pages.

Article, "In the Age of Napster, Protecting Copyright is a Digital Arms Race," Wall Street Journal, Jul. 24, 2000, 2 pages.

Article, "Sound Waves Could Help Ease Web-Fraud Woes," Wall Street Journal, Aug. 14, 2000, 2 pages.

Blum, Jonathan, "Digital Rights Management May Solve the Napster "Problem"," Technology Investor Industry Sector, (Oct. 2000), 24-27.

Brown, D, Techniques for Privacy and Authentication in Personal Communication Systems; Personal Communications, IEEE; vol. 2, Issue: 4 Publication Year: 1995, pp. 6-10.

Dagan (Power over Ethernet (PoE) Midspan—The Smart Path to Providing Power for IP Telephony Author: Sharon Dagan, Product Manager, Systems Aug. 2005, PowerDsine Inc.), 28 pages.

Debow, Credit/Debit Debuts in Midwest Smart Card Test, Computers in Banking, v6, n11, p. 10, Nov. 1989, 4 pages.

Dennis, Digital Passports Need Not Infringe Civil Liberties, Newsbytes, Dec. 2, 1999, 2 pages.

Fasca, Chad, "The Circuit," Electronic News, 45(45) (Nov. 8, 1999), 20 pages.

Firecrest Shows How Truly Commercially-Minded Companies Will Exploit the Internet, Computergram International, Jan. 18, 1996, 2 pages.

"Frequently Asked Questions (FAQs) About BioPay," BioPay, LLC, 2007, [online] [Retrieved on Jan. 7, 2007] Retrieved from the Internet <URL: http://www.biopay.comlfaqs-lowes.asp>, 5 pages.

Generation of keys for use with the digital signature standard (DSS) ; Nel, J.J.; Kuhn, G.J.; Communications and Signal Processing, 1993., Proceedings of the 1993 IEEE South African Symposium on Publication Year: 1993, pp. 6-11.

"IEEE 802.15.4-2006-Wikipedia, the free encyclopedia," Wikipedia®, Last Modified Mar. 21, 2009 [Online] [Retrieved on Apr. 30, 2009] Retrieved from the Internet <URL:http://en.wikipedia.org/wiki/IEEE_802.15.4-2006>, 4 pages.

Lake, Matt, "Downloading for Dollars," Sound & Vision, (Nov. 2000), pp. 137-138.

Lewis, Sony and Visa in On-Line Entertainment Venture, New York Times, v145, Nov. 16, 1995, 1 page.

APPLE EXHIBIT 1054
APPLE v. PROXENSE
IPR2024-00783

(56) **References Cited**

OTHER PUBLICATIONS

McIver, R. et al., "Identification and Verification Working Together," Bioscrypt™, Aug. 27, 2004, [online] [Retrieved on Jan. 7, 2007] Retrieved from the Internet <URL:http://www.ibia.org/membersadmin/whitepapers/pdf/15/Identification%20and%20Verification%20Working%20Together.pdf>, 5 pages.
Nilsson, J. et al., "Match-On-Card for Java Cards," Precise Biometrics, White Paper, Apr. 2004, [online] [Retrieved on Jan. 7, 2007] Retrieved from the Internet <URL: http://www.ibia.org/membersadmin/whitepapers/pdf/17/Precise%20Match-onCard%20for%20Java%020Cards.pdf>, 5 pages.
Nordin, B., "Match-On-Card Technology," Precise™ Biometrics, White Paper, Apr. 2004, [online] [Retrieved on Jan. 7, 2007] Retrieved from the Internet <URL:http://www.ibia.org/Membersadmin/whitepapers/pdf/17 IPrecise%20Match-onCard%20technology.pdf>, 7 pages.
Notification of the International Search Report and Written Opinion, PCT/US04/38124, Apr. 7, 2005, 10 pages.
Paget, Paul, "The Security Behind Secure Extranets," Enterprise Systems Journal, (Dec. 1999), 4 pgs.
PCT International Search Report and Written Opinion, PCT/US07/11105, Oct. 20, 2008, 10 pages.
PCT International Search Report and Written Opinion, PCT/US07/11103, Apr. 23, 2008, 9 pages.
PCT International Search Report and Written Opinion, PCT/US05/43447, Feb. 22, 2007, 7 pages.
PCT International Search Report and Written Opinion, PCT/US05/46843, Mar. 1, 2007, 10 pages.
PCT International Search Report and Written Opinion, PCT/US07/00349, Mar. 19, 2008, 10 pages.
Personal Servers as Digital Keys; Beaufour, A.; Bonnet, P.; Pervasive Computing and Communications, 2004. PerCom 2004. Proceedings of the Second IEEE Annual Conference on Publication Year: 2004, pp. 319-328.
Press Release, "Micronas and Thomson Multimedia Showcase a New Copy Protection System that Will Drive the Future of Digital Television," www.micronas.com, Jan. 8, 2002, 3 pages.
Press Release, "Content Protection Plan Targets Wireless Home Networks," www.eetimes.com, Jan. 11, 2002, 2 pages.
Press Release, "Thompson Bets on Smart Cards for Video Encryption," www.informationweek.com. Jun. 7, 2001, 1 page.
Press Release, "Thompson Multimedia Unveils Copy Protection Proposal Designed to Provide Additional Layer of Digital Content Security," www.thompson-multimedia.com May 30, 2001, 2 pages.
"SAFModule™: A Look Into Strong Authentication," saflink Corporation, [online] [Retrieved on Jan. 7, 2007] Retrieved from the Internet<URL:http://www.ibia.org/membersadmin/whitepapers/pdf/6/SAFmod_WP.pdf>, 8 pages.
Sapsford, Jathon, "E-Business: Sound Waves Could Help Ease WebFraud Woes," Wall Street Journal, (Aug. 14, 2000), B1, 2 pages.
"Say Hello to Bluetooth," Bluetooth Web site, 5 pages [Last retrieved on Mar. 25, 2008].
"Smart Cards and Biometrics White Paper," Smart Card Alliance, May 2002, [online] [Retrieved on Jan. 7, 2007] Retrieved from the Internet <URL:http://www.securitymanagement.com/library/smartcard_faqtech0802.pdf>, 7 pages.
Van Winkle, William, "Bluetooth, the King of Connectivity," Laptop Buyer's Guide and Handbook, (Jan. 2000), pp. 148-153.
Wade, W., "Using Fingerprints to Make Payments at POS Slowly Gaining Popularity," Credit Union Journal, International Biometric Group, Apr. 21, 2003, [online] [Retrieved on Jan. 7, 2007] Retrieved from the Internet <URL: http://www.biometricgroup.comlin_the_news/04.21.03.html>, 3 pages.
Wallace, Bob, "The Internet Unplugged," InformationWeek, 765(22), (Dec. 13, 1999), pp. 22-24.
Weber, Thomas E., "In the Age of Napster, Protecting Copyright is a Digital Arms Race," Wall Street Journal, (Jul. 24, 2000), B1, 2 pages.
Non-Final Office Action, U.S. Appl. No. 11/939,451, Dated: May 12, 2010, 12 pages.

* cited by examiner

APPLE EXHIBIT 1054
APPLE v. PROXENSE
IPR2024-00783

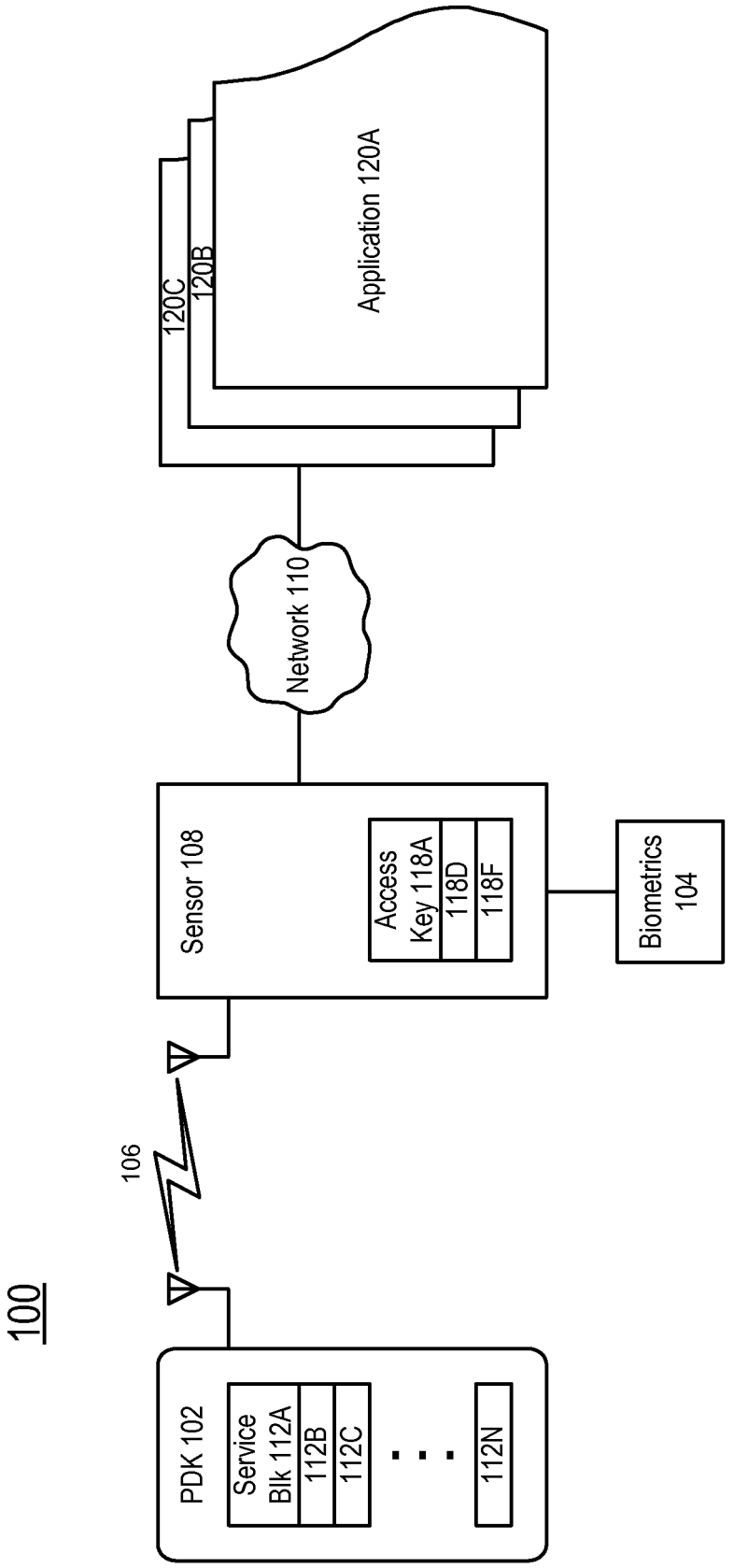

FIG. 1

APPLE EXHIBIT 1054
APPLE v. PROXENSE
IPR2024-00783

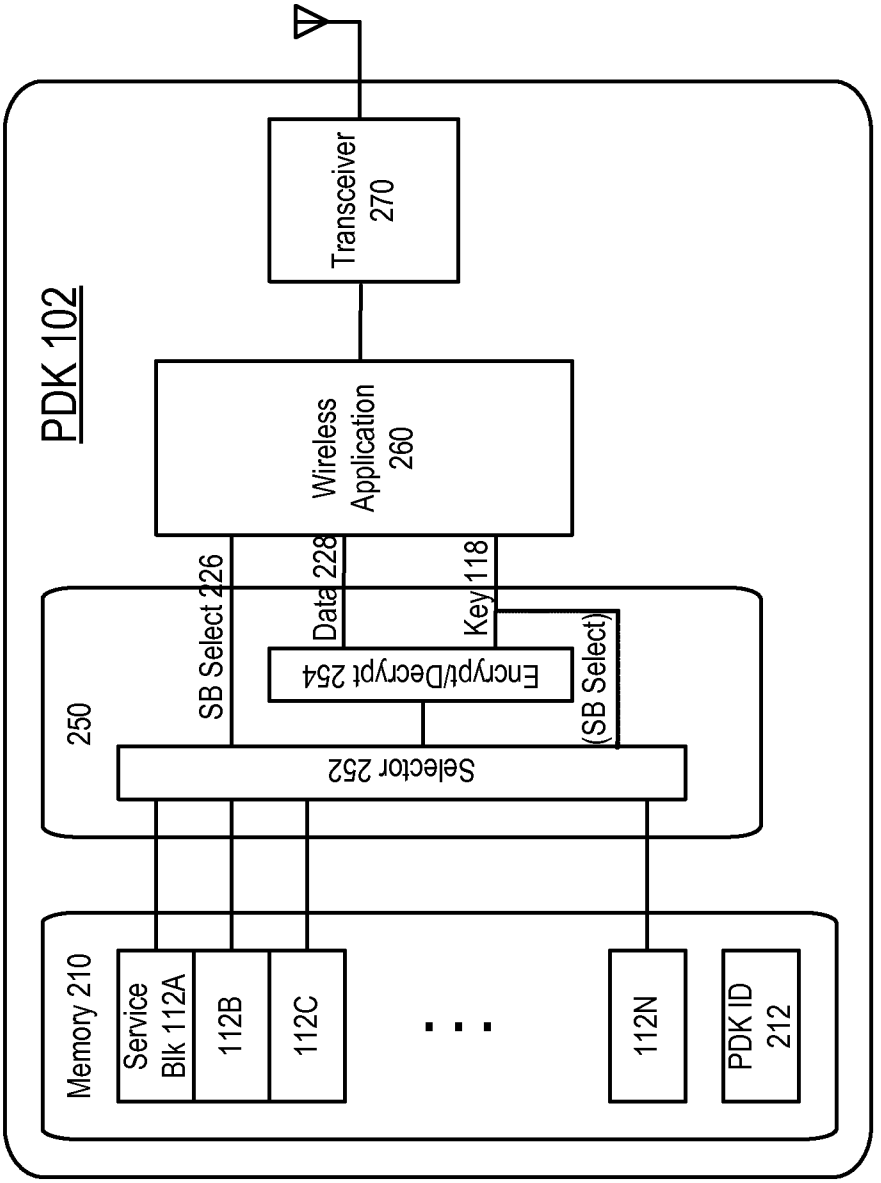

FIG. 2

APPLE EXHIBIT 1054
APPLE v. PROXENSE
IPR2024-00783

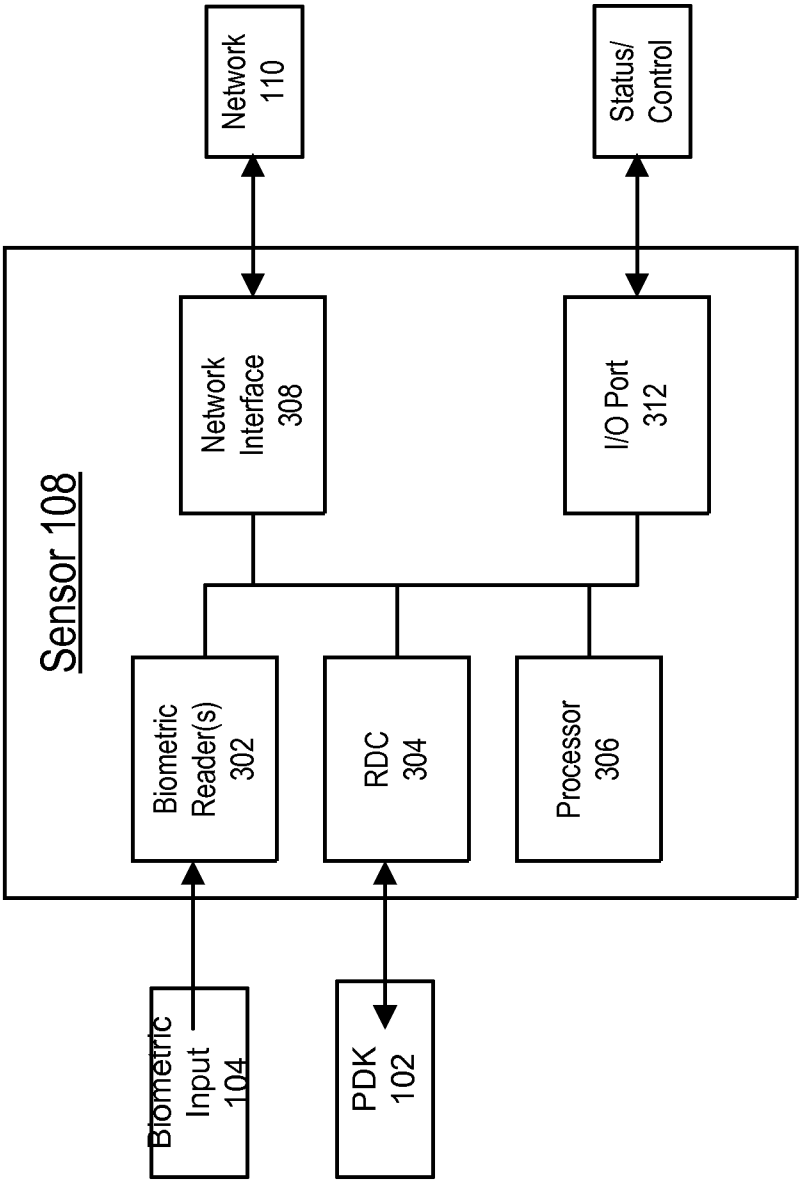

FIG. 3

APPLE EXHIBIT 1054
APPLE v. PROXENSE
IPR2024-00783

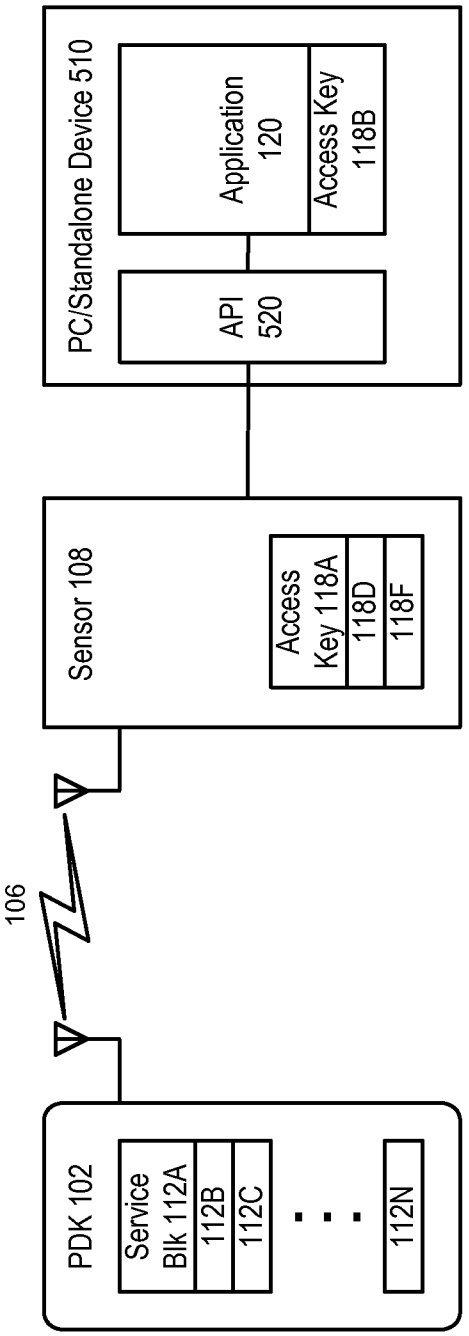

FIG. 4

APPLE EXHIBIT 1054
APPLE v. PROXENSE
IPR2024-00783

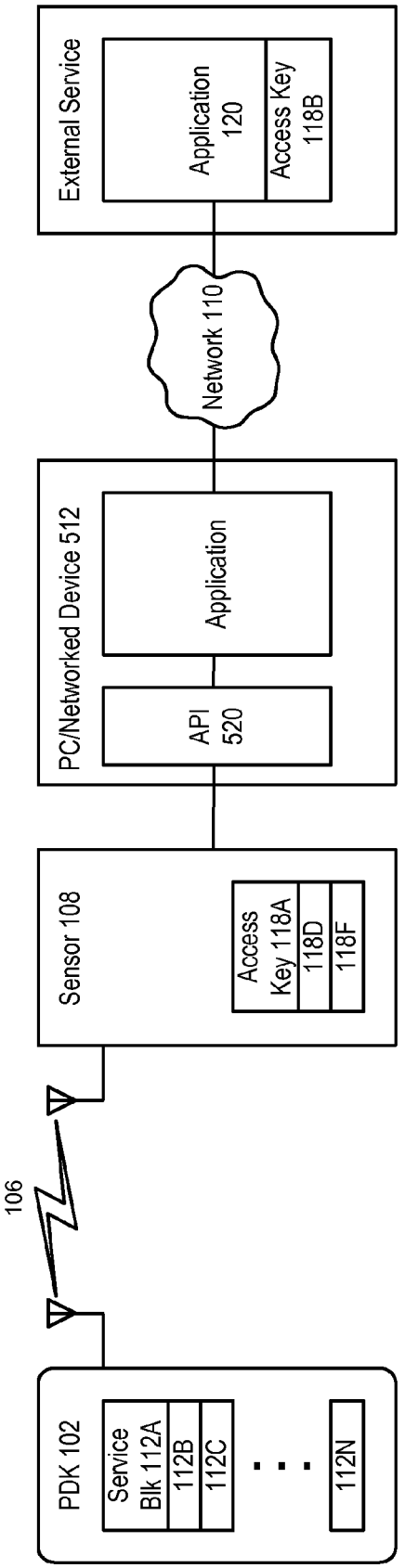

FIG. 5

APPLE EXHIBIT 1054
APPLE v. PROXENSE
IPR2024-00783

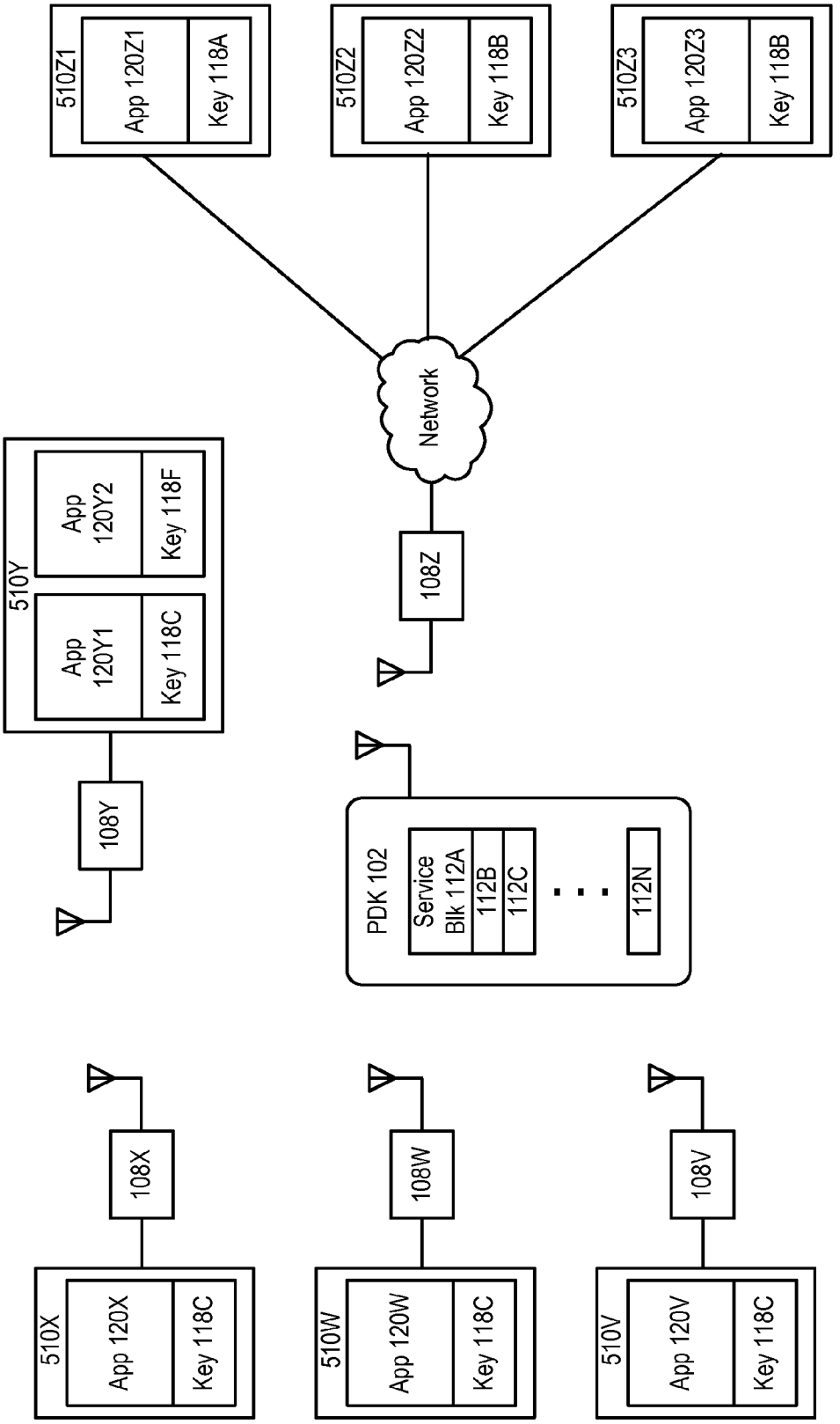

FIG. 6

APPLE EXHIBIT 1054
APPLE v. PROXENSE
IPR2024-00783

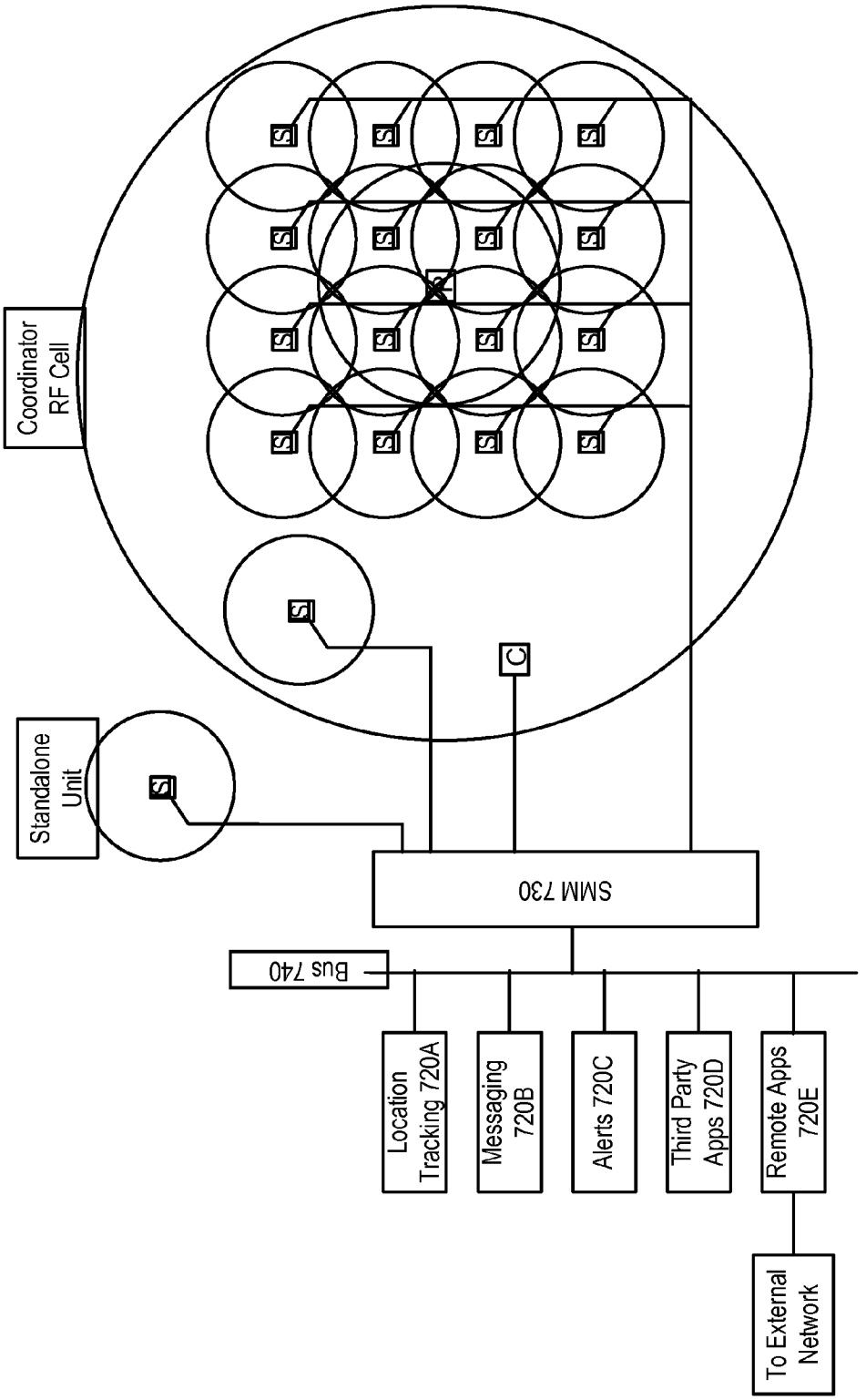

FIG. 7

APPLE EXHIBIT 1054
APPLE v. PROXENSE
IPR2024-00783

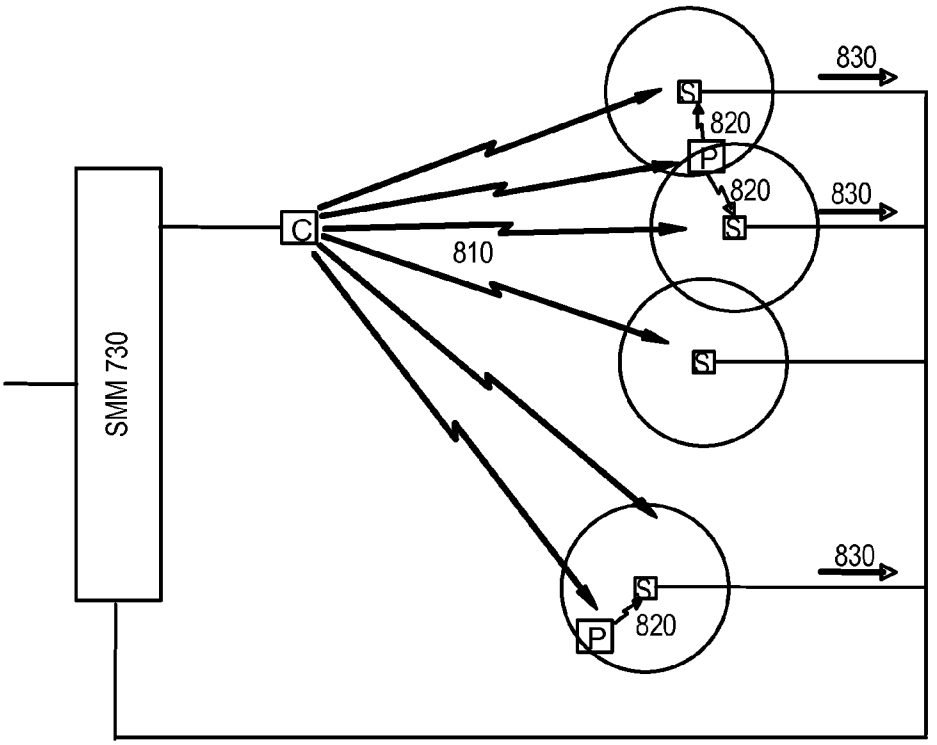

FIG. 8

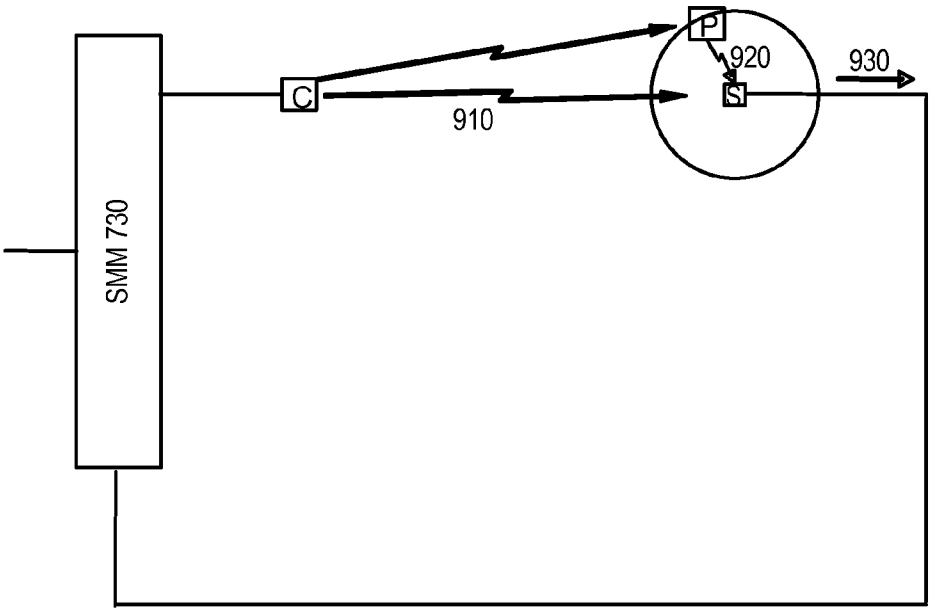

FIG. 9

APPLE EXHIBIT 1054
APPLE v. PROXENSE
IPR2024-00783

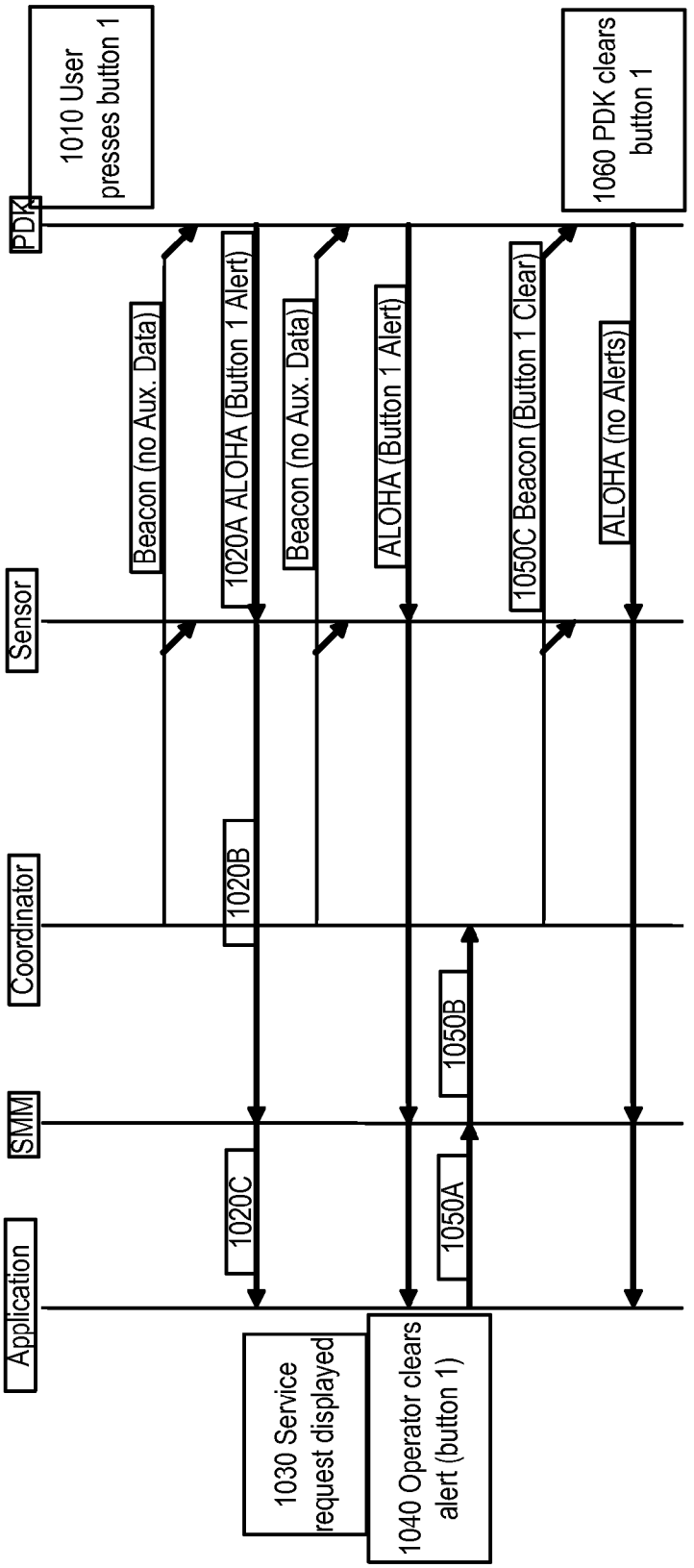

FIG. 10

APPLE EXHIBIT 1054
APPLE v. PROXENSE
IPR2024-00783

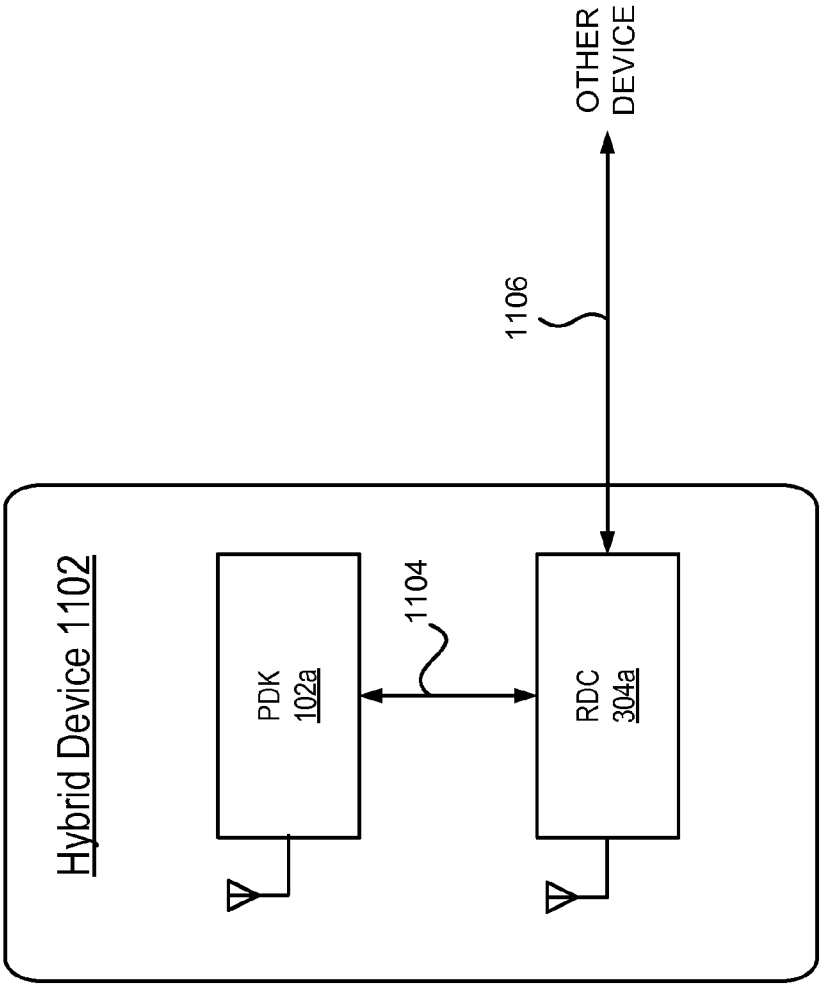

FIG. 11

APPLE EXHIBIT 1054
APPLE v. PROXENSE
IPR2024-00783

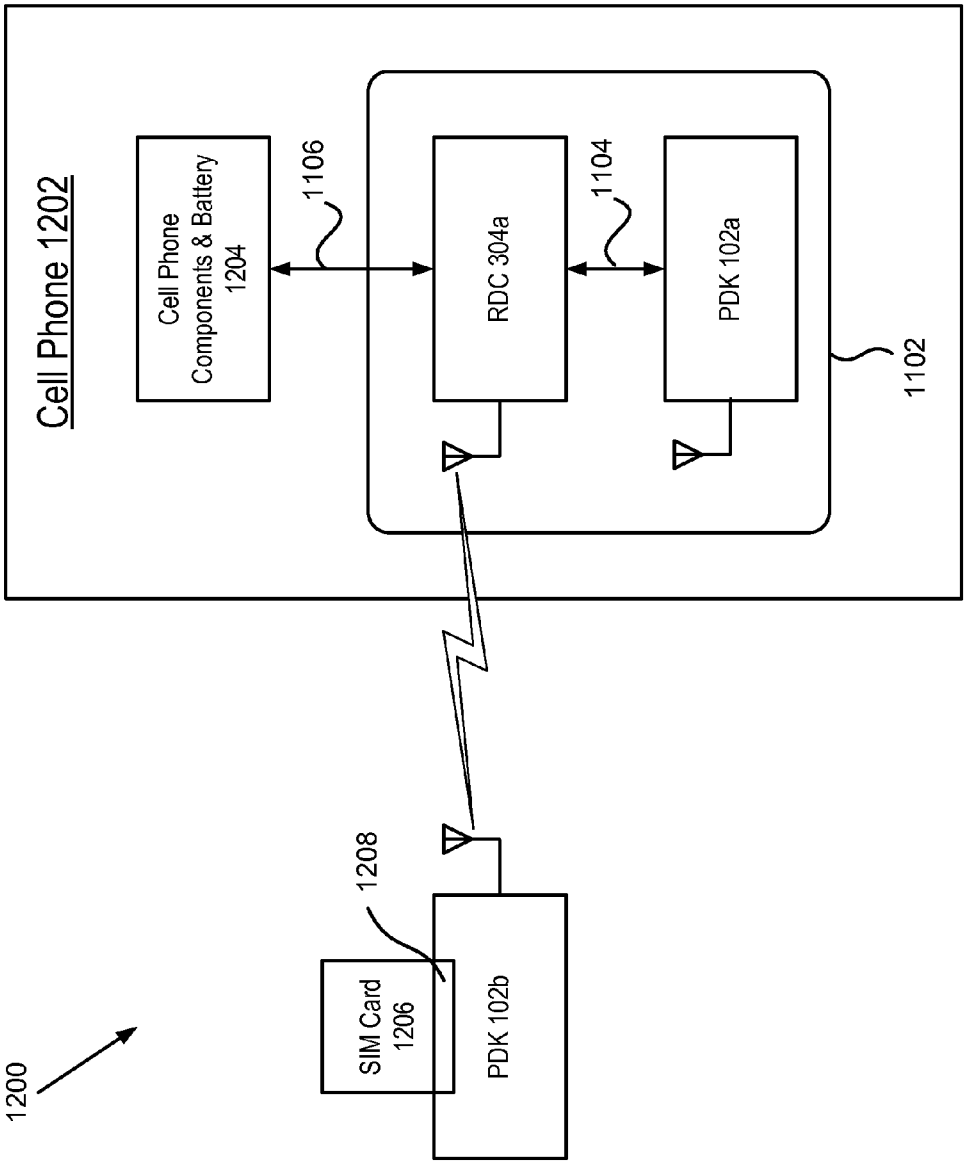

FIG. 12

APPLE EXHIBIT 1054
APPLE v. PROXENSE
IPR2024-00783

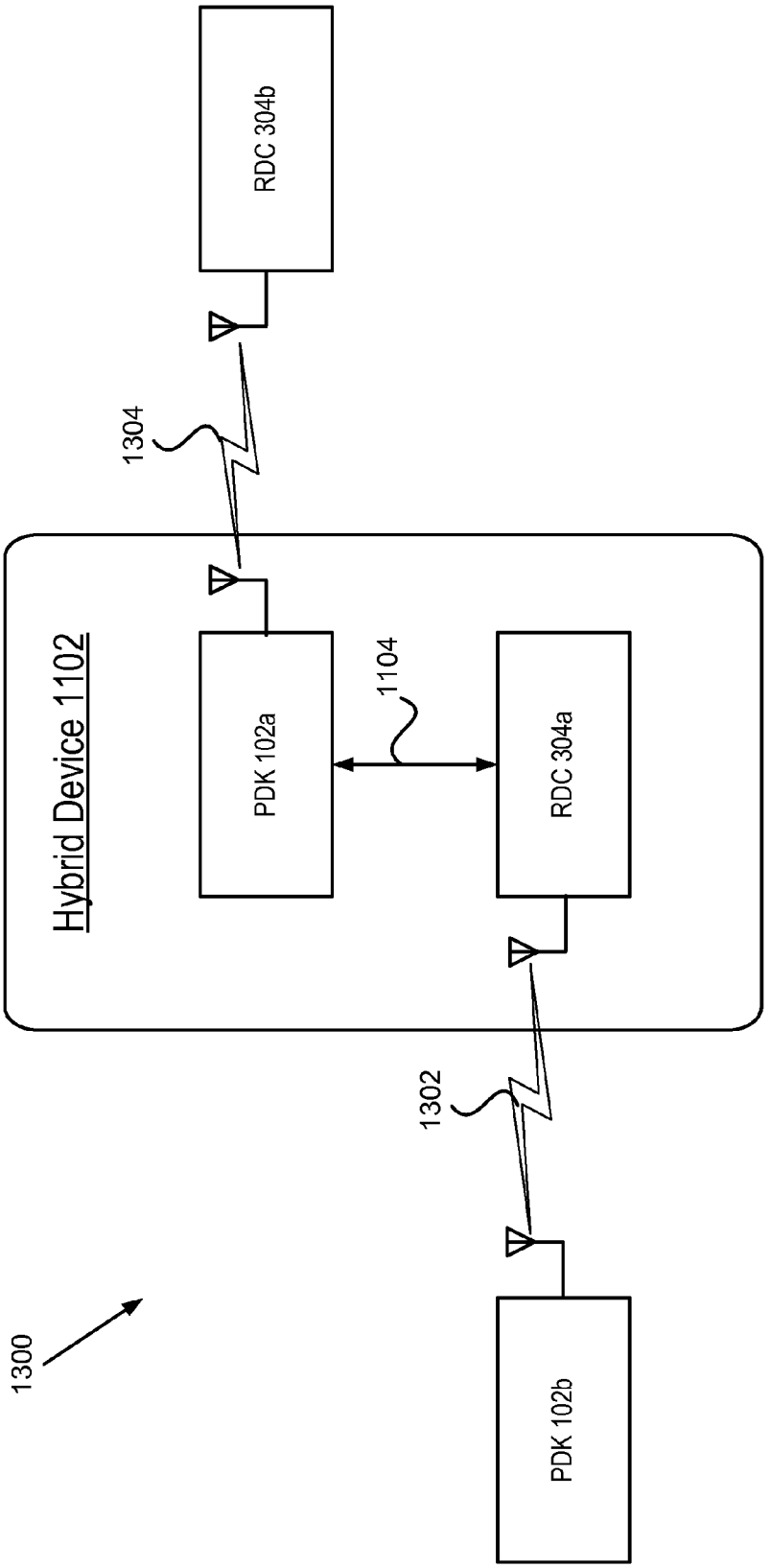

FIG. 13

APPLE EXHIBIT 1054
APPLE v. PROXENSE
IPR2024-00783

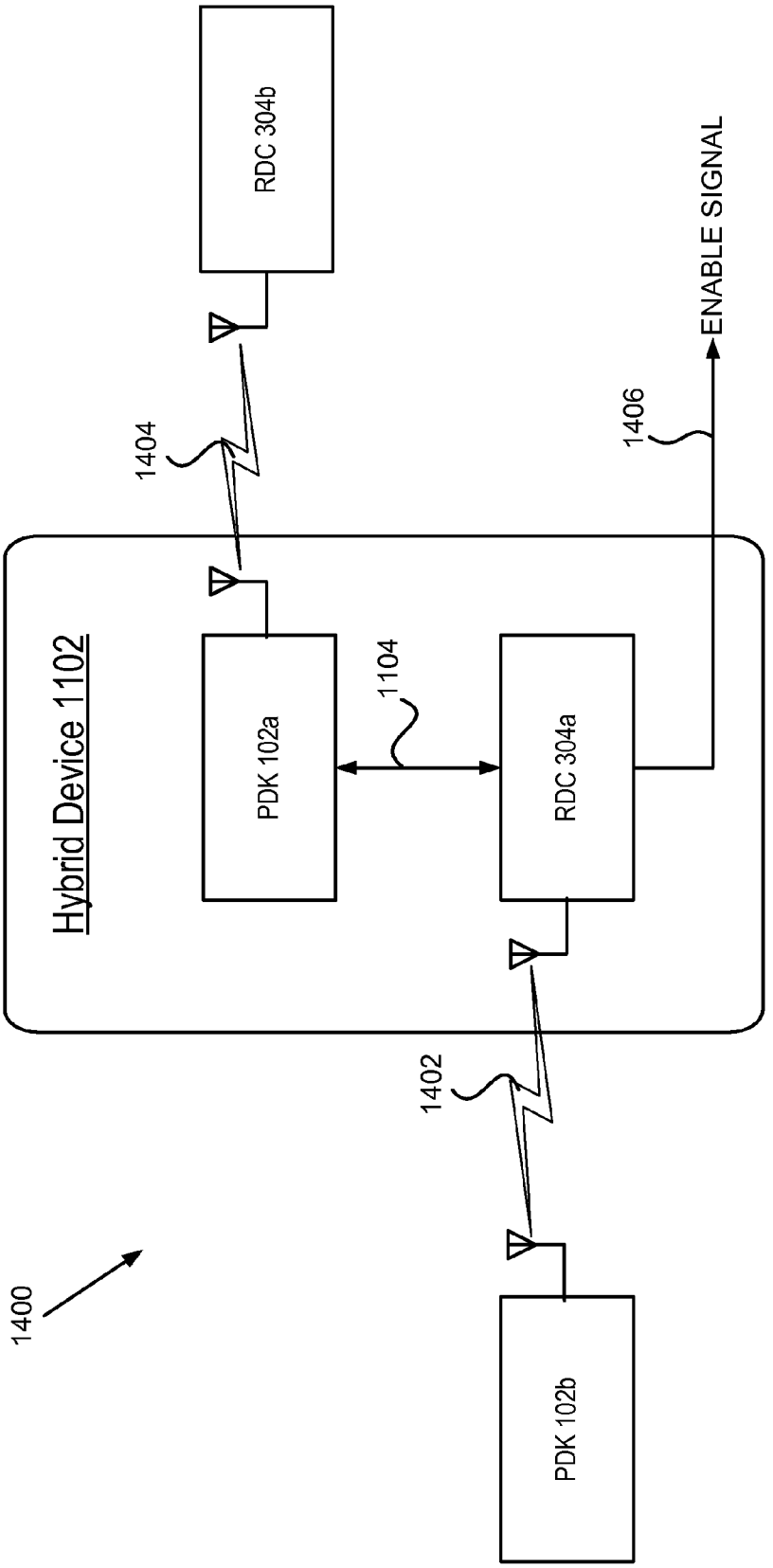

FIG. 14

APPLE EXHIBIT 1054
APPLE v. PROXENSE
IPR2024-00783

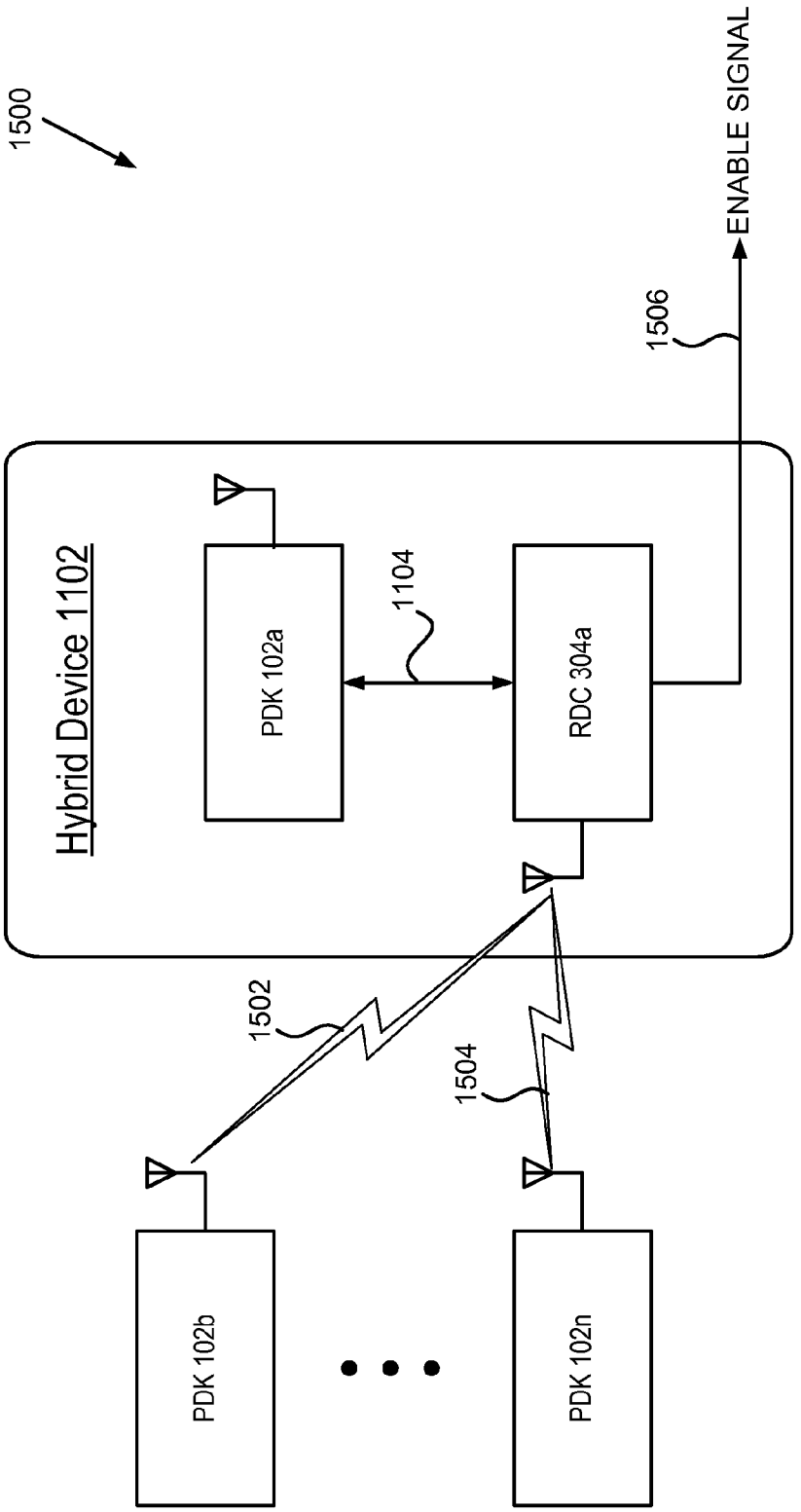

FIG. 15

APPLE EXHIBIT 1054
APPLE v. PROXENSE
IPR2024-00783

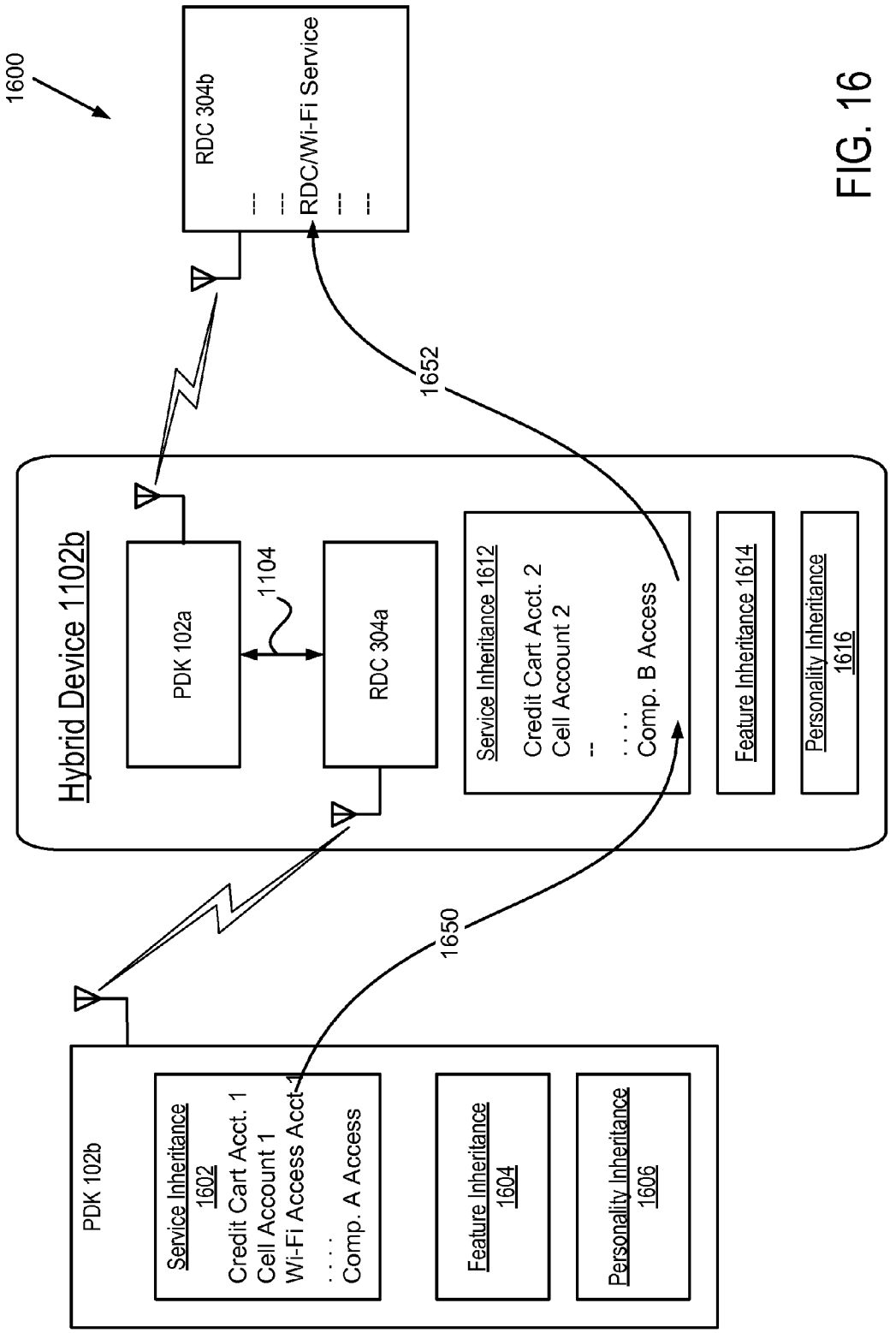

FIG. 16

APPLE EXHIBIT 1054
APPLE v. PROXENSE
IPR2024-00783

HYBRID DEVICE HAVING A PERSONAL DIGITAL KEY AND RECEIVER-DECODER CIRCUIT AND METHODS OF USE

CROSS-REFERENCE TO RELATED APPLICATIONS

The present application claims priority under 35 U.S.C. §120 to U.S. patent application Ser. No. 13/445,825 entitles "Hybrid Device Having a Personal Digital Key and Receiver Decoder Circuit and Method of Use," filed Apr. 12, 2012, which claims priority under 35 U.S.C. §120 to U.S. patent application Ser. No. 12/329,329 entitled "Hybrid Device Having a Personal Digital Key and Receiver Decoder Circuit and Method of Use," filed Dec. 5, 2008, now U.S. Pat. No. 8,171,528, which claims the benefit of priority under 35 U.S.C. §119(e) of U.S. Provisional Application No. 60/992,953 entitled "Reverse Prox," filed on Dec. 6, 2007 by David L. Brown, John J. Giobbi and Fred S. Hirt. The entire contents of all of the foregoing are incorporated by reference herein.

BACKGROUND

1. Field of Art

The invention generally relates to personal digital keys and corresponding sensors, capable of proximity detection/location determination and auxiliary data services/application services. Still more particularly, the present invention relates to a hybrid device including a personal digital key (PDK) and a receiver-decoder circuit (RDC) and methods for using same.

2. Description of the Related Art

Proximity sensors and location tracking are technologies with many applications. For example, proximity sensors can be used to provide secure access to physical and/or digital assets, based on biometrics, passwords, PINS, or other types of authentication. Proximity sensors typically have advantages of being less cumbersome, easier to use, and more flexible in form factor and implementation. Proximity sensors can be used to control access to resources and/or to authenticate individuals, for example.

One possible application that can take advantage of proximity sensors is location tracking RFID tracking is one example. In RFID, RFID tags are attached to objects to be tracked. RFID readers then interact with the RFID tags to determine the location of the tag. Regardless of how it is accomplished, location tracking (i.e., knowledge about the location of an object or person) is generally useful. For example, location tracking information can be used to track inventory and trace the route of objects through various locations. It can be used for time and motion studies. If tags are attached to people, then tracking of people can be used to better understand their behavior. Knowledge about a person's location (and/or their past locations and projected future locations) could be used to provide better services to that person.

However, most proximity systems and location tracking systems have limited capabilities. Typically, the proximity sensor, RFID tag or similar device is a dumb device, in the sense that the device is designed and has the capability only to report its location. For example, such devices typically do not have the capabilities to run different applications or to even interact with different applications. Furthermore, these systems typically are proprietary and narrowly tailored for a specific situation, thus preventing easy expandability to other situations or third party applications.

SUMMARY

Various drawbacks of the prior art are overcome by providing a hybrid device including a personal digital key (PDK) and a receiver-decoder circuit (RDC). The PDK and RDC of the hybrid device are coupled for communication with each other. In one embodiment, the hybrid device also provides a physical interconnect for connecting to other devices to send and receive control signals and data, and receive power. The hybrid device operates in one of several modes including, PDK only, RDC only, or PDK and RDC. This allows a variety of system configurations for mixed operation including: PDK/RDC, RDC/RDC or PDK/PDK. The present invention also includes a number of system configurations for use of the hybrid device including: use of the hybrid device in a cell phone; simultaneous use of the PDK and the RDC functionality of hybrid device; use of multiple links of hybrid device to generate an authorization signal, use of multiple PDK links to the hybrid device to generate an authorization signal; use of the hybrid device for authorization inheritance and use of the hybrid device for automatically disabling a service or feature.

Other aspects of the invention include systems and components corresponding to the above, and methods corresponding to all of the foregoing.

BRIEF DESCRIPTION OF THE FIGURES

FIG. **1** is a block diagram illustrating one embodiment of a system according to the invention.

FIG. **2** is a block diagram illustrating one embodiment of a Personal Digital Key (PDK).

FIG. **3** is a block diagram illustrating one embodiment of a sensor.

FIGS. **4-6** are block diagrams illustrating further embodiments of systems according to the invention.

FIG. **7** is a block diagram illustrating one embodiment of a system with networked sensors.

FIGS. **8-9** are block diagrams illustrating operation of the system in FIG. **7**.

FIG. **10** is a diagram illustrating operation of the system in FIG. **7**.

FIG. **11** is a block diagram of one embodiment of a hybrid device in accordance with the present invention.

FIG. **12** is a block diagram of one embodiment of a system in which the hybrid device is part of a cell phone in accordance with the present invention.

FIG. **13** is a block diagram of one embodiment of a system using the PDK and the RDC functionality of hybrid device in accordance with the present invention.

FIG. **14** is a block diagram of one embodiment of a system using the multiple links of hybrid device to generate an authorization signal in accordance with the present invention.

FIG. **15** is a block diagram of one embodiment of a system using the multiple PDK links to the hybrid device to generate an authorization signal in accordance with the present invention.

FIG. **16** is a block diagram of one embodiment of a system using the hybrid device for authorization inheritance in accordance with the present invention.

The figures depict various embodiments of the present invention for purposes of illustration only. One skilled in the art will readily recognize from the following discussion that alternative embodiments of the structures and methods illustrated herein may be employed without departing from the principles of the invention described herein.

DETAILED DESCRIPTION

FIG. **1** is a high level block diagram illustrating a system for allowing access to multiple applications (or services). The system **100** comprises a Personal Digital Key (PDK) **102**, a

APPLE EXHIBIT 1054
APPLE v. PROXENSE
IPR2024-00783

sensor **108**, a network **110** and one or more applications **120** (including services). The sensor **108** is coupled to the PDK **102** by a wireless link **106** and coupled to a network **110** by either a wired or wireless link. In this example, the applications **120** are also accessed over network **110**. The sensor **108** is also adapted to receive a biometric input **104** from a user and is capable of displaying status to a user. In alternative embodiments, different or additional resources and databases may be coupled to the network **110**, including for example registries and databases used for validation or to check various registrations of the user. In another embodiment, the sensor **108** operates as a standalone device without a connection to the network **110**.

The PDK **102** includes multiple service blocks **112**A-N as described in more detail in FIG. **2**. Each service block **112** is accessed using a corresponding service block access key **118**. In this example, the sensor **108** contains three of the service block access keys **118**A, D, F. The service block access keys **118** allow the sensor **108** to unlock information stored in the corresponding service blocks **112**, which information is used as local secured information.

In one example, a biometric is required in order to access specific service blocks **112** in the PDK **102**. Verification of the biometric is achieved by using service block **112**A. The sensor **108** stores the corresponding service block access key **118**A and uses this key to unlock the biometric service block **112**A, which stores a valid biometric. A current biometric is received using biometric input **104**. The sensor **108** then verifies the stored biometric (from service block **112**A) against the recently acquired biometric (from input **104**). Upon proper verification, various applications **120** are permitted to connect to the PDK **102** via the sensor **108** and/or to gain access to other service blocks **112**.

The system **100** can be used to address applications **120** where it is important to authenticate an individual for use. Generally, the sensor **108** wirelessly receives information stored in the PDK **102** that uniquely identifies the PDK **102** and the individual carrying the PDK **102**. The sensor **108** can also receive a biometric input **104** from the individual. Based on the received information, the sensor **108** determines if access to the application **120** should be granted. In this example, the system **100** provides authentication without the need for PINs or passwords (although PINs and passwords may be used in other implementations). Moreover, personal biometric information need not be stored in any local or remote storage database and is only stored on the user's own PDK (in one embodiment).

The credibility of the system **100** is ensured by the use of a PDK **102** that stores trusted information. The PDK **102** is a compact, portable uniquely identifiable wireless device typically carried by an individual. The PDK **102** stores digital information in a tamper-proof format that uniquely associates the PDK **102** with an individual. Example embodiments of PDKs are described in more detail in U.S. patent application Ser. No. 11/292,330, entitled "Personal Digital Key And Receiver/Decoder Circuit System And Method" filed on Nov. 30, 2005; U.S. patent application Ser. No. 11/620,581 entitled "Wireless Network Synchronization Of Cells And Client Devices On A Network" filed on Jan. 5, 2007; and U.S. patent application Ser. No. 11/620,577 entitled "Dynamic Real-Time Tiered Client Access" filed on Jan. 5, 2007, the entire contents of which are all incorporated herein by reference.

The sensor **108** wirelessly communicates with the PDK **102** when the PDK **102** is within a proximity zone (i.e., within a microcell) of the sensor **108**. The proximity zone can be, for example, several meters in radius and preferably can be adjusted dynamically by the sensor **108**. Thus, in contrast to many conventional RF ID devices, the sensor **108** can detect and communicate with the PDK **102** without requiring the owner to remove the PDK **102** from his/her pocket, wallet, purse, etc. Generally, the sensor **108** receives uniquely identifying information from the PDK **102** and initiates an authentication process for the individual carrying the PDK **102**. In one embodiment, the sensor **108** is adapted to receive a biometric input **104** from the individual. The biometric input **104** comprises a representation of physical or behavioral characteristics unique to the individual. For example, the biometric input **104** can include a fingerprint, a palm print, a retinal scan, an iris scan, a photograph, a signature, a voice sample or any other biometric information such as DNA, RNA or their derivatives that can uniquely identify the individual. The sensor **108** compares the biometric input **104** to information received from the PDK **102** to determine authentication. Alternatively, the biometric input **104** can be obtained by a biometric sensor on the PDK **102** and transmitted to the sensor **108** for authentication. In additional alternative embodiment, some or all of the authentication process can be performed by the PDK **102** instead of the sensor **108**.

In this example, the sensor **108** is further communicatively coupled to the network **110** in order to receive and/or transmit information to remote databases for remote authentication. In an alternative embodiment, the sensor **108** includes a non-volatile data storage that can be synchronized with one or more remote databases or registries. Such an embodiment alleviates the need for a continuous connection to the network **110** and allows the sensor **108** to operate in a standalone mode and for the local data storage to be updated when a connection is available. For example, a standalone sensor **108** can periodically download updated registry entries and perform authentication locally without any remote lookup.

In yet another alternative, a standalone sensor **108** may have a pre-configured secure access key **118** and encryption algorithm, or a variable access key **118** that changes, for example based on time and sensor ID. One example application would be a sensor **108** located in a hotel room door, where the sensor could constantly compute a different access key **118** based on time, and the PDK **102** could be associated with this key during the hotel registration process.

The network **110** provides communication between the sensor **108** and various validation databases and/or registries, in addition to the applications **120**. In one embodiment, the network **110** uses standard communications technologies and/or protocols. Thus, the network **110** can include links using technologies such as Ethernet, 802.11, 802.16, integrated services digital network (ISDN), digital subscriber line (DSL), asynchronous transfer mode (ATM), etc. Similarly, the networking protocols used on the network **110** can include the transmission control protocol/Internet protocol (TCP/IP), the hypertext transport protocol (HTTP), the simple mail transfer protocol (SMTP), the file transfer protocol (FTP), etc. The data exchanged over the network **110** can be represented using technologies and/or formats including the hypertext markup language (HTML), the extensible markup language (XML), etc. In addition, all or some of links can be encrypted using conventional encryption technologies such as the secure sockets layer (SSL), Secure HTTP and/or virtual private networks (VPNs). In another embodiment, the entities can use custom and/or dedicated data communications technologies instead of, or in addition to, the ones described above.

In one aspect, the sensor **108** may connect to a validation database that stores additional information that may be used for authorizing a transaction to be processed at the sensor. For example, in purchase transactions, the sensor **108** may inter-

APPLE EXHIBIT 1054
APPLE v. PROXENSE
IPR2024-00783

act with a credit card validation database that is separate from the merchant providing the sale. Alternatively, a different database may be used to validate different types of purchasing means such as a debit card, ATM card, or bank account number.

In another aspect, the sensor **108** may connect to various registries that store, among other items, PDK, notary, and/or sensor information. In one embodiment, a registry stores biometric or other types of information in an encoded format that can only be recovered using an algorithm or encoding key stored in the PDK. Information stored in the registries can be accessed by the sensor **108** via the network **110** for use in the authentication process. Two basic types of registries are private registries and a Central Registry. Private registries are generally established and administered by their controlling entities (e.g., a merchant, business authority, or other entity administering authentication). Private registries can be custom configured to meet the specialized and independent needs of each controlling entity. A Central Registry is a highly-secured, centrally-located database administered by a trusted third-party organization. In one embodiment, all PDKs **102** are registered with the Central Registry and may be optionally registered with one or more selected private registries. In alternative embodiments, a different number or different types of registries may be coupled to the network **110**.

The service blocks **112** can be used for purposes other than user authentication. For example, information used or produced by an application **120** can be transferred back and forth to the corresponding service block **112**. That is, each service block **112** can be used as a local secure memory for the corresponding application **120**. Thus, a service **120**B may store certain sensitive information in service block **112**B, and a separate service **120**C will not be able to access that information without the corresponding access key **118**B. In this example, the sensor **108** only holds access keys **118**A, D, F and does not hold access key **118**B. The application **120**B may hold the access key **118**B, thus allowing it to access service block **112**B but preventing application **120**C from accessing the service block **112**B. Note that this implementation would also prevent the sensor **108** acting alone from accessing the service block **112**B.

Turning now to FIG. **2**, an example embodiment of a PDK **102** is illustrated. The PDK **102** comprises a memory **210**, control logic **250**, wireless application **260** and a transceiver **270**. The PDK **102** can be standalone as a portable, physical device or can be integrated into commonly carried items. For example, a PDK **102** can be integrated into a portable electronic device such as a cell phone, Personal Digital Assistant (PDA), or GPS unit, an employee identification tag, clothing, or jewelry items such as watches, rings, necklaces or bracelets. In one embodiment, the PDK **102** can be, for example, about the size of a Subscriber Identity Module (SIM) card and be as small as a square inch in area or less. In another embodiment, the PDK **102** can be easily contained in a pocket, on a keychain, or in a wallet. The PDK can also contain other components not shown, for example various other inputs, outputs and/or interfaces (serial or parallel).

The memory **210** can be a read-only memory, a once-programmable memory, a read/write memory or any combination of memory types, including physical access secured and tamperproof memories. The memory **210** typically stores a unique PDK ID **212**. The PDK ID **212** comprises a public section and a private section of information, each of which can be used for identification and authentication. In one embodiment, the PDK ID **212** is stored in a read-only format that cannot be changed subsequent to manufacture. The PDK ID **212** is used as an identifying feature of a PDK **102** and distinguishes between PDKs **102** in private or Central registry entries. In an alternative embodiment, the registries can identify a PDK **102** by a different ID than the PDK ID **212** stored in the PDK **102**, or may use both the PDK ID **212** and the different ID in conjunction. The PDK ID **212** can also be used in basic PDK authentication to ensure that the PDK **102** is a valid device.

The memory **210** also stores the various service blocks **112**A-N. Whether a particular service block **112** is stored in volatile or non-volatile memory may be determined by the specific application. In one approach, the original issuer of the PDK defines how the internal memory **210** may be used for service blocks **112**. In some cases, the issuer may choose to only allow their service blocks to be stored, in which case third party applications will not be able to store service blocks in memory **210**. In other cases, the issuer may allow any third party service **120** to use available service blocks **112**. If a new service block is created, then memory for that service block is allocated. The specific location of the service block and generation of the corresponding service block access key can be handled by the PDK **102**, or can be handled via an external service.

Regardless of how created, once created, external applications (such as applications **120** in FIG. **1**) can gain access to a specific service block **112** by proving the corresponding access key **118**. In FIG. **2**, this is shown conceptually by control logic **250**. The wireless application **260** on the PDK **102** communicates to the sensor (not shown in FIG. **2**) via transceiver **270**. The wireless application provides a service block select **226** and a service block access key **118** in order to store, retrieve and/or modify data in a service block **112**. The selector **252** selects a service block **112** based on the select signal **226** and the access key **118**. The encryption engine **254** encrypts/decrypts data **228** flowing to/from the service block **112** based on the access key **118** (or some other key generated based on the access key, for example a session key). In an alternate method, the service block **112** may be selected based on the service block access key **118**, eliminating the need for a separate select signal **226**.

The PDK **102** may also include other data and applications. For example, the PDK **102** typically will include various profiles. Many different types of profiles are possible. A biometric profile, for example, includes profile data representing physical and/or behavioral information that can uniquely identify the PDK owner. A PDK **102** can store multiple biometric profiles, each comprising a different type of biometric information. The same biometric information can also be stored multiple times in a PDK **102**. For example, two different applications may use the right index fingerprint, and that biometric information may be stored in two different service blocks, one for each application. In addition, the PDK **102** may also store one or more biometric profile "samples" associated with each biometric profile. Profiles may also store one or more PINS or passwords associated with the PDK owner, or one or more pictures of the PDK owner. A profile can further include personal identification information such as name, address, phone number, etc., bank information, credit/debit card information, or membership information. This information can be useful for transactions.

The transceiver **270** is a wireless transmitter and receiver for wirelessly communicating with a sensor **108** or other wireless device. The transceiver **270** can send and receive data as modulated electromagnetic signals. Moreover, the data can be encrypted by the transceiver **270** and transmitted over a secure link. Further, the transceiver **270** can actively send connection requests, or can passively detect connection requests from another wireless source. In one embodiment,

APPLE EXHIBIT 1054
APPLE v. PROXENSE
IPR2024-00783

the transceiver **270** is adapted to communicate over a range of up to around 5 meters. In another embodiment, the transceiver **270** range can be varied.

Turning now to FIG. **3**, an example embodiment of a sensor **108** is illustrated. The embodiment includes one or more biometric readers **302**, a receiver-decoder circuit (RDC) **304**, a processor **306**, a network interface **308** and an I/O port **312**. In alternative embodiments, different or additional modules can be included in the sensor **108**.

The RDC **304** provides the wireless interface to the PDK **102**. Generally, the RDC **304** wirelessly receives data from the PDK **102** in an encrypted format and decodes the encrypted data for processing by the processor **306**. An example embodiment of an RDC is described in U.S. patent application Ser. No. 11/292,330 entitled "Personal Digital Key And Receiver/Decoder Circuit System And Method," the entire contents of which are incorporated herein by reference. Encrypting data transmitted between the PDK **102** and sensor **108** minimizes the possibility of eavesdropping or other fraudulent activity. In one embodiment, the RDC **304** is also configured to transmit and receive certain types of information in an unencrypted, or public, format.

The biometric reader **302** receives and processes the biometric input **104** from an individual. In one embodiment, the biometric reader **302** is a fingerprint scanner. Other embodiments of biometric readers **302** include retinal scanners, iris scanners, facial scanner, palm scanners, DNA/RNA analyzers, signature analyzers, cameras, microphones, and voice analyzers. Furthermore, the sensor **108** can include multiple biometric readers **302** of different types.

The network interface **308** can be a wired or wireless communication link between the sensor **108** and network **110**. For example, in one type of authentication, information is received from the PDK **102** at the RDC **304**, processed by the processor **306**, and transmitted to external authentication databases through the network interface **308**. The network interface **308** can also receive data sent through the network **110** for local processing by the sensor **108**. In one embodiment, the network interface **308** provides a connection to a remote system administrator to configure the sensor **108** according to various control settings.

The I/O port **312** provides a general input and output interface to the sensor **108**. The I/O port **312** may be coupled to any variety of input devices to receive inputs such as a numerical or alphabetic input from a keypad, control settings, menu selections, confirmations, and so on. Outputs can include, for example, status LEDs, an LCD, or other display that provides instructions, menus or control options to a user.

FIGS. **4-6** are high level block diagrams illustrating additional examples of applications accessing service blocks. FIGS. **4** and **5** illustrate that the application **120** need not be located at any particular location on the network. Rather, the service block **112** is accessed from any application **120** that can attach (in a network sense) to the sensor **108**.

In FIG. **4**, the sensor **108** attaches to the PDK **102** within its microcell, using service block access key **118**(A) and service block **112**(A). A personal computer or other standalone device **510** is attached to the sensor **108**, either directly or via a network. In this example, the device **510** communicates with the sensor via a standardized API **520**. An application **120** executes on the device **510** and has access to the service block access key **118**(B). It uses this key to gain access to the corresponding service block **112**(B). This is an example of a local application **120**.

FIG. **5** illustrates a remote application. In this example, the sensor **108** attaches to the PDK **102** in the same manner as FIG. **4**, using service block access key **118**A and service block **112**A. However, application **120** is not executing on a local device. Rather, it executes remotely. Here, it is shown as an external service **120**. However, service **120** can still gain access to service block **112**B by use of service block access key **118**B, although it does so via network **110** and intermediate device **512**. Although the sensor **108** is the device that attaches to the PDK **102**, a local or remote application **120** with the right credentials may store or retrieve information in a service block **112** in the PDK **102**.

The PDK itself can also be configured to prevent the same source from repeating invalid access attempts to the PDK's service blocks. The PDK may monitor access to the service blocks. When an attached service makes multiple unsuccessful attempts to unlock a service block, the PDK tracks this and eventually ignores the requests from that service for a period of time. Alternately, the PDK may disconnect from the network or take other actions.

An example of a local application (FIG. **4**) is an auto login/logoff of a personal computer. When a PDK **102** is within the proximity of the personal computer **510**, the PDK **102** is detected and the sensor **108** attaches to the PDK **102** (using service block **112**A). The login/logoff application **120** then sends the service block access key **118**B along with a request for the contents of the service block **112**B to the PDK **102** via the sensor **108**. For example, a standard may specify that particular service block **112**B contains username and password. These are returned to the application **120**, allowing automatic login to the personal computer **510**.

An example of a remote application (FIG. **5**) is a credit card transaction. The sensor **108** in this case could be a credit card terminal. When the PDK **102** is brought in close proximity, the credit card terminal **108** attaches to the PDK **102** (using service block **112**A). The terminal **108** then sends the PDK ID **212** to the credit card issuer (the external service) for identification. The credit card issuer may then send a service block access key **118**B back to the sensor **108**, where it is passed on to the PDK **102** to unlock a specific service block **112**B. The contents of the service block **112**B could then be sent back to the credit card issuer where further decryption could occur and the credit card holder could be verified. Once verified, the credit card terminal displays that the transaction is approved.

These two examples illustrate basic concepts of the capabilities of the service blocks and how an application (service) may use them. Since service blocks preferably are both readable and writable, services may use them as they see fit (i.e. debit, username/password, credit card information, etc.). In some sense, the service block acts as a secure local memory on the PDK.

FIGS. **4** and **5** illustrate a basic case where a single application accesses a single service block on a single PDK via a single sensor. The invention is not limited to this case. FIG. **6** illustrates a case with multiple applications, sensors, and service blocks. This illustrates the sharing of service blocks. As shown, service blocks may be limited to a single service or source or may be shared across multiple services and sources. A service block **112** is a protected memory element which allows an application **120** with the right credentials to access it. In this example, applications **120**W, **120**X and **120**Y**1** can each access service block **112**C since each application has access to service block access key **118**C. Similarly, applications **120**V, **120**Z**2** and **120**Z**3** can each access service block **112**B. Although not shown in FIG. **6**, it is also possible for an application to access more than one service block. FIG. **6** also shows a situation where applications **120**Z**1-3** running on different devices **510**Z**1-3** all access the PDK **102** through the same sensor **108**Z. Each sensor **108** covers a certain proxim-

APPLE EXHIBIT 1054
APPLE v. PROXENSE
IPR2024-00783

ity zone (i.e., microcell). The presence of the PDK **102** within a microcell indicates proximity of the PDK to that particular sensor.

Also shown is a device **510**Y with two applications **120Y1** and **120Y2**, each of which accesses a different service block. In some cases, the first application **120Y1** is enabled from a first service block **112**C, thus allowing a second application **120Y2** to operate using a second service block **112**F (although the two applications need not be on the same device **510**). For example, the first application **120Y1** might be the auto login/logoff, where a user logs in to a personal computer via a service block **112**C that provides a username and password. Now that the user is logged in, the user wishes to attach to his credit card company. The user types in the web address of the credit card provider, where the credit card provider requests the user's credentials. First, the user may have to provide some live biometric information. Application **120Y2** compares this against a biometric stored in a second service block **112**F on the PDK. After the sensor **108**Y verifies the correct biometrics, the sensor indicates to the PDK that external services may now access their service blocks. The credit card provider **120Z1** then sends its service block access key **118**A to the PDK where this third service block **112**A is retrieved and sent back to the credit card issuer. The credit card issuer then verifies the data and authorizes the user's transaction.

Furthermore, although the above scenarios focus mostly on service blocks in the PDK, applications may also use the basic authentication function that allows the PDK and sensor to verify each other. In this scenario, once the sensor and PDK finish their verification the application is signaled. The application may then use this information as an assurance that the PDK is a legitimate device (but not necessarily that the holder of the device is legitimate).

In certain cases, access to a service block **112** may allow the application **120** to access various input/outputs on the PDK. For example, the PDK may have several inputs and/or outputs, as well as a serial (or other) interface. The inputs may be either transition triggered or level triggered. An example of a transition triggered event might be a button press, where level triggered might be turning a switch on. Multiple outputs may also exist where they may also be pulsed or level outputs. Finally an interface may allow attachment of an external device, which may then send data through the PDK to the application. In many cases, the inputs and outputs may be simple push button switches and LEDs used to allow a user to interact with an application.

Since the number of applications is limitless, different applications may use the inputs and outputs for different functionality. For example, a user walking into a casino may require attention from a service representative and if the casino has enabled button 1 for this functionality, when the user depresses button 1, an attendant is alerted with information related to the user and the location of the user. In a different application, an actual button may not exist, but it may be tied to an output of another device indicating when a piece of equipment was in use. Whenever the device was in use, the PDK transmits the input 1 active alert back to the backend application. The backend application may then be using this information to determine when the equipment must be recalibrated based on its usage.

This is also true for outputs and any interfaces. Outputs may be used to turn on a light or sound an audible tone used to locate an asset in a building. For example, there may be 20 pieces of equipment in a room which all show up using a location tracking program, but the user would then have to sift through each piece of equipment until the right one is located. Using an output as described above, a light could be lit and the equipment could be immediately located within the room. The interface allows another attached application to the PDK to send information to an end application attached to the sensor. In this case the sensor provides a medium to push data to an external source.

FIG. **7** is a high level block diagram illustrating one embodiment of a system with networked sensors. In this example, multiple sensors (marked "S") are attached to a Sensor Management Module (SMM) **730**. The SMM **730** provides data routing for the sensors (e.g., to and from applications **720**A-E). In this example, the SMM **730** also receives data from the sensors and processes this data to provide location tracking of PDKs (marked "P") that are within the sensor field. In this implementation, the system also includes an application layer message bus **740**, over which the SMM **730** and applications **720** can exchange messages. This allows multiple applications **720** to simultaneously communicate with PDKs and make use of the location tracking of the PDKs. The application layer message bus **740** may also be extended to other applications via a remote application interface.

In FIG. **7**, each sensor's microcell (i.e., proximity zone) is denoted by a circle around the sensor. Similarly, the PDK's range is shown by the heavy larger circle. In the example shown, the PDK is in range of four different sensor zones and any of the four sensors may establish communications to the PDK. Using a network topology as shown, the SMM may instruct a specific sensor to attach to the PDK. Once established, the communication link will allow the PDK to communicate with various applications **720**, in this example via the SMM **730** and bus **740**. Applications **720** will be able to access service blocks on the PDK through the use of service block access keys, as described above.

In addition, in this example, the sensors are at known locations, preferably at fixed locations. For example, sensors may be distributed throughout a building or other structure or site (including outdoors). The sensors interact with the PDK in a manner that allows the sensors to gather position data about the PDK. This position data is sent by the sensors to the SMM **730**, which processes the data to determine the PDK's position and to provide location tracking of the PDK over time. The position and/or location tracking information can then be made available to applications **720** via bus **740**, in addition to allowing the applications **720** to communicate with the PDK.

Location tracking of the PDK by the sensor network can be achieved in different ways, one of which will be described below. The example in FIG. **7** uses a coordination module (marked "C") or simply coordinator, although this is not required in other implementations. The large dashed circle shows the coordinator's cell. In this example, the sensors preferably contain two transceivers, one to communicate with the coordinator on what will be referred to as the control channel and another to communicate with the PDK on what will be referred to as the traffic channel.

FIG. **8** illustrates operation of the system in FIG. **7**. The coordinator C broadcasts **810** a periodic beacon on a control channel. The sensors and PDKs synchronize to this periodic beacon. On the control channel, when a sensor is not receiving the broadcasted beacon, it is timesharing between listening for a PDK ALOHA response and possibly sending a command to a specific PDK. The PDK, after detecting the beacon, remains on the control channel and continues to periodically wake up, receive the beacon, and realign its timing. By using system related information found in the beacon and its own serial number, the PDK calculates the wakeup time to synchronize to the beacon and broadcast **820**

APPLE EXHIBIT 1054
APPLE v. PROXENSE
IPR2024-00783

an ALOHA response. As shown, the PDK's broadcasted ALOHA response may overlap several sensors causing multiple sensors to receive the information simultaneously. Each sensor that receives an ALOHA response from a PDK performs a store and forward **830** of the responses to the SMM **730** on a periodic basis.

The coordinator and sensors communicate to the SMM **730** via a backend network. This communications method used to attach each device to the SMM may be wired or wireless provided it has the bandwidth required to transport the information between the devices. When a PDK ALOHA response is detected by a sensor, the sensor collects information such as the PDK ID, receiver signal strength indication, and timestamp. After receiving this information from the sensors, the SMM independently applies the new information for each PDK from the sensors, to the previous history of that PDK and through location deterministic algorithms computes the most likely sensor microcell in which the PDK is located. There are multiple known algorithms for doing so. In one approach, location (proximity) is determined based on prior location history, time at the current location, RF signal strength and geographic contours. The SMM may also store the raw data for further alternate processing methods or for diagnostic purposes.

The SMM **730** can broadcast this information on the application layer messaging bus **740** for applications **720** to use. For example, one application **720**A might be a location tracking application with a graphical user interface that shows the current position or trail of the PDK. The SMM **730** (or applications **720**) may also store the location information and make it available on an on-demand basis.

In this particular example, access is allocated using a time division multiple access (TMDA) system, where an RF logical channel is distributed over time and each device has a specific period known as a timeslot in which they are allowed to respond. Each timeslot has a preamble and timeslot synchronization character followed by a packet, and lastly a guard period. The content of each packet is dependent on the source device, channel type (control or traffic), and timeslot location.

For example, the coordinator broadcasts the beacon on a period basis. All sensors and PDKs receive the beacon. Each PDK then broadcasts its ALOHA response at a specific timeslot allocated for that purpose. In addition to the handshake messages that occur on the control channel, the beacon and ALOHA response may also carry auxiliary data. This data may be in the form of an alarm indication, command/status, or user/application data, for example. It could be provided by an end application, SMM network command, external device interface (such as a terminal interface), or via an internal alarm functions such as low battery, input signal change, or setting an output signal polarity.

After an ALOHA response is broadcast from a PDK, the PDK listens for a command from nearby sensors. Based on the type of PDK and time it is present in one geographical location, one or more nearby sensors that detected the ALOHA response, may also send additional paging or auxiliary data in the sensor command response timeslot for a specific PDK.

Other timeslots can be allocated to traffic channels and/or to other messages over the control channel. Various TDMA approaches can be used to allocate the wireless communications channel. Non-TDMA approaches can also be used.

The sensor network system of FIG. **7** provides a closed loop system. With the SMM **730** being the central hub, broadcasting auxiliary data through the coordinator (and sometimes sensor devices) and collecting PDK auxiliary data through the sensors, it is possible to determine if in an asymmetrical system a command was successfully completed.

FIG. **9** illustrates an example of how the closed loop system works. In step **910**, the SMM **730** (via the coordinator) broadcasts a beacon that also contains auxiliary information. This auxiliary information contains a command from an application **720** to be executed by the PDK. Assume that, for this particular command, the PDK is expected to acknowledge execution of the command. After the PDK executes the command, the PDK sends **920** the acknowledge message as auxiliary data in one of the PDK's ALOHA responses. The sensor receives the ALOHA response and passes **930** the information back to the SMM **730**. The SMM **730** has now verified that the command was successfully executed. Such commands could be as simple as set an output to turn on a light or generate an audible sound. It is also possible that an application **720** attached to the SMM **730** may request to pass data to the specific PDK where that data may then be passed to an external terminal application where the system acts only as a transport mechanism. In this mode, the applications attached at each end would be responsible for verifying and acknowledging the data was sent and received successfully.

A second example is shown in FIG. **10**, where the PDK initiates an alert. The coordinator periodically transmits a beacon and the PDK periodically returns an ALOHA response. In the example, a user carrying a PDK is located within a service oriented business, such as a department store, casino, restaurant, etc. The user desires to talk with a service representative from the organization and depresses **1010** the service button on their PDK (button 1). The next time the PDK wakes up to send an ALOHA response, the PDK attaches the button 1 alert to the ALOHA messages and broadcasts **1020**A it. A local sensor receives the location response containing the button 1 alert and eventually sends **1020**B the received ALOHA responses back to the SMM. The SMM may reformat the data and passes **1020**C the indication back to the application. The application then indicates **1030** a button 1 request from the particular PDK serial number (and other related user information) on the application console. The PDK continues to send back the button 1 alert until cleared or a timeout period occurs. This allows devices that have inadequate coverage (e.g., on the edge of a cell boundary) to continue to send the alert until detected.

Eventually the console operator becomes aware of the service request and dispatches a representative to the user and clears **1040** the button 1 alert on the console. The clear button 1 alert is then sent **1050**A-B to the coordinator where it is queued to go out **1050**C on the proper beacon when the PDK will be awake. Once the PDK wakes up and receives **1050**C its next beacon, the PDK clears out **1060** the button 1 alert indicator and returns to a basic ALOHA state with no auxiliary data pending.

The example shown may have also had a visible indicator in the PDK where the visible indicator may have become lit when the button was depressed. Once the button 1 alert was cleared the indicator would be unlit.

In this example, neither the application nor SMM verified the PDK actually received the clear button 1 alert. In one approach, each auxiliary message (page, alert, etc.) sent by a device contains a sequence number. If a device continues to send the information after it is acknowledged or cleared, the device is aware of the condition because of the sequence number. Any time a new auxiliary message is sent, the sequence number is incremented to alleviate the confusion as to how new or old any message is.

For some systems, redundancy is important. Redundancy can be implemented in the example system of FIG. **7** in a

APPLE EXHIBIT 1054
APPLE v. PROXENSE
IPR2024-00783

number of ways. For example, it is possible to provide multiple coordinators where these coordinators can be used to extend a coverage area or as a redundant backup. In one approach, each coordinator broadcasts its beacon on the same RF channel with a slight timing offset from the other coordinators. This creates a simulcast system where if one coordinator fails, the second coordinator can still resume system operation. This may also counter the issues of multipath by providing spatial diversity with the coordinators. Another redundancy measure is that information can be sent to PDK via the sensors, in addition to or in place of the coordinator. Another example of redundancy is that multiple sensor may receive messages from the PDK so there may be multiple paths back to the SMM via different sensors.

Referring now to FIG. **11**, one embodiment of a hybrid device **1102** in accordance with the present invention will be described. The hybrid device **1102** comprises a PDK **102***a* and an RDC **304***a*. Depending on the embodiment, the hybrid device **1102** utilizes the PDK functionality, the RDC functionality or both the PDK functionality and the RDC functionality. Those skilled in the art will recognize that in other embodiments, the hybrid device **1102** has multiple instances of PDK functionality or multiple instances of the RDC functionality or multiple instances of both. As illustrated in FIG. **11**, the PDK **102***a* is coupled by signal line **1104** to the RDC **304***a*. This direct coupling allows the PDK **102***a* and the RDC **204***a* to communicate control signals and data for various applications will be described below. The signal line **1104** is also used to provide power to the PDK **102***a* via the RDC **304***a* in configurations where the RDC **204***a* is coupled to a power source via signal line **1106**. In this embodiment, the RDC **304***a* is also coupled to signal line **1106** for communication with other devices (not shown). The signal line **1106** can be used to send and receive control signals and data as well as to receive power. Thus, in certain embodiments, the hybrid device **1102** need not have its own independent power source. Moreover, in other embodiments not shown, signal line **1106** is coupled directly to the PDK **102***a* to provide power.

In one embodiment, the PDK **102***a* is similar to the PDK **102** described above with reference to FIG. **2** and includes the same functionality as described above. Those skilled in the art will recognize that in other embodiments, the PDK **102***a* includes less functionality than that described above with reference to FIG. **2**. In a minimal embodiment, the PDK **102***a* includes an antenna and a transceiver for communicating with a RDC (not shown) and a controller and memory for storing information particular to a user. In yet other embodiments, the PDK **102***a* includes functionality beyond that described above with reference to FIG. **2**. The PDK **102***a* implements the PDK functionality as will be described below with reference to FIGS. **11-16** using a processor and memory of the PDK **102***a*.

For simplicity and ease of understanding, the hybrid device **1102** is shown as including an RDC **304***a*. In one embodiment, the RDC **304***a* is similar to that described above with reference to FIG. **3** above. In another embodiment, the RDC **304***a* represents and includes the functionality described above as being provided by the sensor **108**. Those skilled in the art will recognize that the RDC **304***a* may have more or less functionality that described above with reference to FIG. **3** above. The RDC **304***a* implements RDC functionality as will be described below with reference to FIGS. **11-16** using a processor and memory of the RDC **304***a*. The RDC **304***a* is coupled to an antenna for communication with other PDKs **102** and coupled to signal line **1106** to send and receive data and control signals from other devices (not shown). In certain embodiments, signal line **1106** also provides power to the RDC **304***a*.

Referring now to FIG. **12**, one embodiment a system **1200** of the present invention in which the hybrid device **1102** is part of a cell phone **1202** will be described. The system **1200** comprises a PDK **102***b* and the cell phone **1202**. The cell phone **1202** further comprises cell phone components and a battery **1204** and the hybrid device **1102**. As described above with reference to FIG. **11**, the hybrid device **1102** includes PDK **102***a* and RDC **304***a* coupled for communication with each other via signal line **1104**. In this embodiment, the cell phone components and a battery **2004** are coupled to the RDC **304***a* by signal line **1106**. This allows the RDC **304***a* to use the communication capabilities of the cell phone **1202** including the voice and data channels provided by conventional cell phone to communicate with other networks and devices (not shown). The RDC **304***a* and the PDK **102***a* are adapted to communicate wirelessly with other devices, such as the PDK **102***b*. While FIG. **12** shows the hybrid device **1102** as including both the RDC **304***a* and the PDK **102***a*, in another embodiment the hybrid device **1102** includes only the RDC **304***a*.

In one embodiment, the cell phone **1202** including the hybrid device **1102** collectively forms a secure cell phone or a generic access point. In such an embodiment, the hybrid device **1102** has a form factor similar to that of a conventional SIM card for cell phones. This is particularly advantageous because the hybrid device **1102** can be used with a variety of existing cell phones without any modification and the hybrid device **1102** is merely inserted in place of a conventional SIM card to provide this functionality. The conventional SIM card is replaced with the hybrid device **1102** that provided the RDC functionality. In other words, the hybrid device **1102** provides authorization control as well as a storage area for storing information specific to a user. The SIM content (Cell phone account, contact information, and credit card information) that is normally stored in the cell phone **1202** is instead stored in the PDK **102***b* carried by the user. In one embodiment, the PDK **102***b* stores the original SIM content in its local memory. For example, the PDK **102***b* defines a SIM slot **1208** to receive the original SIM card **1206**, communicatively couples to the SIM card **1206** and copies the information from the SIM card **1206**, effectively giving the original SIM card **1206** a wireless extension.

Such a configuration is particularly advantageous for a number of reasons. First, the cell phone **1202** is rendered useless (except 911) if the PDK **102***b* is out of range of the RDC **304***a* of the hybrid device **1102**. Second, the local phone content such as calendar, contacts, etc. is protected because it resides on the PDK **102***b*, and is secure and not accessible by the cell phone **1202**, its hybrid device **1102** or its RDC **304***a* without the PDK **102***b*. Third, the RDC function provided by the RDC **304***a* of the hybrid device **1102** in the cell phone **1202** becomes a generic access point and allows any PDK **102**, not just the PDK **102***b*, to access it. Thus, any user that has an account with a specific service provider may "bond" or "link" their PDK **102** to the cell phone **1202**, allowing their account to be charged for any services rendered. Both the bonding process and service access may be performed via the keypad, voice activated, or via bio-functions of the cell phone **1202**. Fourth, any PDK **102** may store and provide contract based account information (such as a cell phone account), or may provide credit information (such as a credit or debit card) that is billed for the service. This allows any person that carries a PDK **102** with credit card information store thereon to use their credit card to gain wireless voice and data services

APPLE EXHIBIT 1054
APPLE v. PROXENSE
IPR2024-00783

without signing a long term contract. Fifth, since the content is carried on the PDK **102**, any type of cell phone may be used. The PDK **102** provides active updates to its internal contents allowing for "last call received" or "last number dialed" to be saved. By bonding the PDK **102** to another phone and hitting redial, the last number that was dialed from any other phone associated with the PDK, is now redialed. There is no need to transfer information from phone to phone or to have back up contact information stored on a personal computer. In an alternate embodiment, the contents (including last number dialed) are stored at the service provider (or in a user defined path—i.e. personal website, etc.) and become available on the cell phone **1202** when the PDK **102** "bonds" to the phone **1202**. The referenced account is obtained and the data is transferred to that phone in volatile memory using the network of the service provider to which the cell phone **1202** is coupled. Moreover, the PDK "phone" contents may also be synchronized to a personal computer application via an RDC attached to the personal computer. The phone does not have to be present, only the PDK with a correct password or entry method (bio, etc). The above application/configuration makes cell phones generic allowing any subscriber carrying a PDK **102** with either a cell phone account or credit account to acquire any phone and start using it. Since the user's information stays with the user, it is possible the user could span across multiple cell phone providers in different countries and still maintain a single virtual cell phone account.

In another embodiment, the hybrid device **1102** contains a copy of the contents of SIM card **1206** information. In this embodiment, the contents that are stored in hybrid device **1102** may only be accessible if PDK **102***b* is within proximity of the Cell Phone **1202**. In this embodiment, SIM card **1206** is not required to be present in the PDK **102***b*.

In a variation to the embodiment described above with reference to FIG. **12**, a second embodiment of the system **1200** does not include the PDK **102***b*. Instead the functionality described above with reference to the PDK **102***b* is provided by the PDK **102***a* that is part of the hybrid device **1102**. The hybrid device **1102** uses the PDK function provided by PDK **102***a*. The hybrid device **1102** is coupled to the cell phone **1202**, in particular the cell phone components and battery **1204**, via internal integration or an access port. Such a configuration is particularly advantageous because the PDK function then becomes part of the cell phone **1202** using battery power from the cell phone **1202** and providing the same type of access as described above. Moreover, PDK **102***a* can provide access control passwords etc. for any type of functions enabled by the phone such as but not limited to gaming, personal computer access, e-commerce, etc. Additionally, the PDK enabled phone uses the back channel to perform other validation/update functions via the cellular infrastructure.

In a variation to the embodiment described above with reference to FIG. **12**, the hybrid device **1102** includes and uses both the RDC **304***a* and the PDK **102***a*. This adds the hybrid functionality of being capable of performing both simultaneous RDC and PDK functions to the cell phone **1202**. The hybrid functionality extends the type of offerings and functionality by allowing the cell phone **1202** to perform the functionality described above as well as additional functionality described below with reference to FIGS. **13-16**.

Referring now to FIGS. **13-16**, the hybrid functionality provided by the hybrid device **1102** will be described in more detail. The hybrid device **1102** allows for many different configurations and operations of the secure PDK/RDC protocol. The hybrid device **1102** allows mixed operations including: RDC/PDK, RDC/RDC or PDK/PDK combinations. For purposes of explanation below, each device is enabled with either or both RDC and PDK functionality.

FIG. **13** is a block diagram of one embodiment of a system **1300** simultaneously using the PDK and the RDC functionality of the hybrid device **1102** in accordance with the present invention. FIG. **13** shows the system **1300** comprising a hybrid device **1102** having a first PDK **102***a* and a first RDC **304***a*, a second PDK **102***b*, and a second RDC **304***b*. In this configuration of the system **1300**, the hybrid device **1102** maintains two separate simultaneous links: a first link **1302** between the second PDK **102***b* and the first RDC **304***a* of the hybrid device **1102**; and a second link **1304** between the first PDK **102***a* of the hybrid device **1102** and the second RDC **304***b*. In this system **1300**, the second PDK **102***b*, possibly carried by a user, enables the first RDC **304***a* of the hybrid device **1102**. The hybrid device **1102** in turn with its first PDK **102***a* enables the second RDC **304***b*, for example being associated with a third component such as endpoint RDC function.

In one embodiment, each link **1302**, **1304** of the system **1300** provides an independent authorization. In FIG. **13**, the hybrid device **1102** provides authorization to the second RDC **304***b*. The hybrid device **1102** carries credentials (credit card, account information, etc.) that are used to enable a service associated with the second RDC **304***b*. For example, a cell phone includes the hybrid device **1102** and the hybrid device **1102** stores credit card information. A user makes a purchase using the cell phone as their credit source. The same user also carries the second PDK **102***b*. The second PDK **102***b* provides authorization to the hybrid device **1102** to enable specific functionality (charging using of the credit card information) provided by the hybrid device **1102**. In other words, the second PDK **102***b* is used to enable specific features in the hybrid device **1102**. The second PDK **102***b* carries the user's cellular service account information that is used to enable specific cellular services. If the second PDK **102***b* is no longer present, those services are disabled. Each the authorizations, credit card and cell service, is independent of the other.

In another embodiment, the links **1302**, **1304** of the system **1300** provide a daisy chained authorization. In FIG. **13**, the second PDK **102***b* authorizes the hybrid device **1102** which in turn authorizes the second RDC **304***b*. It is mandatory for the second PDK **102***b* to have a connection to the hybrid device **1102** before the hybrid device **1102** can initiate a request for authorization from the second RDC device **304***b*. For example, a parent could give a child conditional charging privileges where the child may only charge if the parent is present. The child carries the hybrid device **1102** (possibly in a cell phone), and chooses to make a purchase in a local video store. That store has a specific account for the child that is linked to his/her PDK **102***a* of the hybrid device **1102**. When the child walks up to the counter to make the purchase, he/she is identified by their personal ID (included on PDK **102***a* of the hybrid device **1102** and transmitted to the RDC **304***b*) and their account is opened. Since the parent is in the same vicinity, the hybrid device **1102** communicates with the parents PDK **120***b* and obtains authorization to charge to the parent's account. If the parent was not present, the child would still be identified, but would not have charging privileges. In an alternate embodiment, the RDC **304***a* of the hybrid device **1102** allows different PDKs with different credentials to "bond" with it (i.e. Fathers, Mothers, guardian, adult sibling, etc.), any one of which could be used for authorization.

Referring now to FIG. **14**, one embodiment of a system **1400** using the multiple links to the hybrid device **1102** to generate an authorization signal in accordance with the present invention will be described. More specifically, only

APPLE EXHIBIT 1054
APPLE v. PROXENSE
IPR2024-00783

when the hybrid device **1102** has multiple links **1402**, **1404** will the hybrid device **1102** generate an authorization or enable signal on signal line **1406**. In this embodiment, the hybrid device **1102** has a physical output or connection for providing the authorization signal. Any variety of different types of devices may be coupled to signal line **1406** to receive the authorization or enabling signal. Without receipt of such a signal, the associated devices (not shown) are not operable. As illustrated in FIG. **14**, the hybrid device **1102** requires authorization from both the second RDC **304***b* and the second PDK **102***b* to enable functionality. As an example, the hybrid device **1102** is coupled to and secures a personal computer (not shown). For the personal computer to operate, it must authenticate with a specific RDC **304***b* or fixed equipment at a specific physical location. A user carrying a PDK **102***b* with the correct privileges must also be present to gain access to the computer. If either the RDC **304***b* or PDK **102***b* is not present, the hybrid device **1102** does not allow operation of the personal computer. This prevents theft and illegal use of the property.

Referring now to FIG. **15**, one embodiment of a system **1500** that uses multiple PDK links **1502**, **1504** to the hybrid device **1102** to generate an authorization signal is shown. For the system **1500**, only when multiple PDK links **1502**, **1504** to the hybrid device **1102** exist, will an authorization enablement signal be generated on signal line **1506**. Again, in this embodiment, the hybrid device **1102** has a physical output or connection for providing the authorization signal. The system **1500** comprises the hybrid device **1102** and a plurality of PDKs **102***a*-**102***n*. Although only two PDKs are shown in FIG. **15**, those skilled in the art will recognize that the system **1500** may be configured to include any number of PDKs greater than two. As shown in FIG. **15**, the hybrid device **1102** requires authorization (e.g., that a link be established) from multiple PDKs **102***b*, **102***n* in order to enable functionality. As an example, the hybrid device **1102** is coupled to control an electronic lock for a safety deposit box. The office manager and the customer each with respective PDKs **102***b*, **102***n* need to be present before the hybrid device **1102** generates an enable signal on signal line **1506** to unlock the safety deposit box and allow access to it.

Referring now to FIG. **16**, one embodiment of a system **1600** using the hybrid device **1102***b* for authorization inheritance is shown. One particular advantage of using hybrid devices **102** is that they provide a mechanism for authorization inheritance within the system **1600**. Authorization inheritance is when a first device passes selected information to a second device and the second device then "inherits" that information for use. The use of the information can be a one-time use during the presence of the first device, multiple uses with or without the presence of the first device or permanent use. Furthermore, there are multiple types of inheritance including service inheritance, feature inheritance and personality inheritance. Service inheritance is authorization of the second device for any functionality provided by a given service. Feature inheritance is similar to service inheritance but for a limited set of features offered by a given service. Personality inheritance is where the preferences of a user or holder of a first device are shared with a user or holder of a second device.

These inheritance concepts and the operation of the hybrid device **1102***b* will now be described in the specific context of system **1600** shown in FIG. **16** as including a PDK **102***b* operating as the first device, the hybrid device **1102***b* operating as the second device and the RDC **304***b* operating as the third device. The system **1600** illustrates a hybrid device **1102***b* with simultaneous PDK and RDC functionality to provide inheritance. In this context, the inheritance promulgates the authorization or features from the first device to the second device and onto the third device. However, those skilled in art will recognize that in another embodiment, the first and second devices both communicate directly with the third device to perform the same function. For example, the PDK **102***b* and the hybrid device **1102***b* both directly communicate to the RDC **304***b* and both provide permissions to allow the RDC **304***b* to generate an authorization or access (without the PDK **102***b* going through the hybrid device **1102***b*).

As shown in FIG. **16**, the PDK **102***b* is similar to the PDK **102** described above with reference to FIG. **2** and includes like components and has similar functionality. The PDK **102***b* also includes service inheritance storage **1602**, feature inheritance storage **1604** and personality inheritance storage **1606**. The service inheritance storage **1602**, feature inheritance storage **1604** and personality inheritance storage **1606** are used to store information that is provided from the PDK **102***b*, the first device, and inherited by the second device, the hybrid device **1102***b*. The PDK **102***b* is carried by a first user and the PDK **102***b* has multiple accounts on this first device. For example, the service inheritance information stored in service inheritance storage **1602** includes a first credit card account, a first cell phone account, Wi-Fi access information, and computer A access information. The feature inheritance storage **1604** and personality inheritance storage **1606** are used to store information used for feature and personality inheritance as will be described below. Those skilled in the art will recognize that in another embodiment, the service inheritance storage **1602**, the feature inheritance storage **1604** and the personality inheritance storage **1606** is a shared or unified memory space with the service inheritance storage **1602**, the feature inheritance storage **1604** and the personality inheritance storage **1606** each being a set of references or pointers to the information in the shared or unified memory space. Those skilled the art will recognize that working memory of the PDK **102***b* may be used for storing the inheritance information, and that in another embodiment, the PDK **102***b* need not have service inheritance storage **1602**, feature inheritance storage **1604** and personality inheritance storage **1606**, but may have only one or two of them.

The hybrid device **1102***b* is similar to the hybrid device **1102** described above with reference to FIG. **11** and includes like components and has similar functionality. The hybrid device **1102***b* also includes service inheritance storage **1612**, feature inheritance storage **1614** and personality inheritance storage **1616**. The hybrid device **1102***b* is communicatively coupled to the service inheritance storage **1612**, feature inheritance storage **1614** and personality inheritance storage **1616**. The service inheritance storage **1612**, feature inheritance storage **1614** and personality inheritance storage **1616** are also used to store inheritance information specific to the user of the hybrid device **1102***b*. The service inheritance storage **1612**, feature inheritance storage **1614** and personality inheritance storage **1616** are used to store inheritance information received from PDKs, e.g., the PDK **102***b*. In one embodiment, the hybrid device **1102***b* is carried by a second user that has a different set of accounts than the user of the first device. For example, the service inheritance information stored in the service inheritance storage **1612** includes a second credit card account, a second cell account, no Wi-Fi access information, and computer B access information. Again, the service inheritance storage **1612**, feature inheritance storage **1614** and personality inheritance storage **1616** are portions of working memory of the hybrid device **1102***b* and the hybrid device **1102***b* need not have service inheritance storage **1612**, feature

APPLE EXHIBIT 1054
APPLE v. PROXENSE
IPR2024-00783

inheritance storage **1614** and personality inheritance storage **1616**, but may have only one or two of them.

In yet another embodiment, the RDC rather than the hybrid device **1102***b* collects and uses inherited information. For example, in a configuration where there are 2 PDKs, a first PDK and a second PDK, the first PDK links and communicates with an RDC. The first PDK then signals the RDC that inherited information is available from the second PDK. The RDC establish a link with the second PDK and gets the inherited information from the second PDK. This is particularly advantageous because it avoids having to send the inherited data through the hybrid PDK **1102***b* as shown in FIG. **16**. It also allows inheritance to be performed without a hybrid PDK **1102**.

The RDC **304***b* operates as the third device and is used to access or enable a Wi-Fi Service. In this embodiment, the RDC **304***b* receives inheritance information and uses it to enable or disable the services associate with the RDC **304***b*. While the RDC **304***b* does not store the inheritance information, in another embodiment it includes service inheritance storage, feature inheritance storage and personality inheritance storage for doing so.

An example method of using the system **1600** will now be described. Both a first user and a second user are at an airport. A Wi-Fi service is offered in the airport and has RDC **304***b* controlling access and use of the Wi-Fi service. The first user has and is in possession of the PDK **102***b*, and the second user has and is in possession of the hybrid device **1102***b*. The second user with the hybrid device **1102***b* wants to obtain Wi-Fi access to check email, but the second user doesn't have a Wi-Fi Access account. The first user having the PDK **102***b* allows the second user to inherit the Wi-Fi access for a one time use. The PDK **102***b* provides this information to the RDC **304***a* of the hybrid device **1102***b* and the hybrid device **1102***b* stores the inherited information in its service inheritance storage **1612** for use as represented by line **1650**. The hybrid device **1102***b* then communicates with the RDC **304***b* to access the Wi-Fi service using the first user's account as represented by line **1652**. The hybrid device **1102***b* is able to access and receive the service using the first user's account which it inherited. Depending on the terms with which the information was inherited, the inherited information allows any number of accesses, access for a predetermined amount of time (e.g., for 30 minutes), a single access, or access up to a particular dollar amount of charges.

In another embodiment, the inheritance information is transferred prior to the service being available. For example, the first user is a parent with a debit card account that is associated with or stored in PDK **102***b*. A child or minor of the parent is associated or in possession of the hybrid device **1102***b*. The system **1600** allows the first user to transfer to their child, a specific dollar amount that the child could spend. In one embodiment, the money is transferred from PDK **102***b* to the hybrid device **1102***b* by transferring account information, a dollar amount and spending restrictions from the service inheritance storage **1602** of PDK **102***b* to the service inheritance storage **1612** of the hybrid device **1102***b*. In another embodiment, the actual transfer is done via a backend server (not shown) where the child's device **102***b* and the hybrid device **1102***b* are only referenced and the backend server actually carries the charge type and amount available. In yet another embodiment, attributes stored in the hybrid device **1102***b* and the backend server can be combined to determine the amount and charge types allowed.

The system **1600** is also used to provide feature inheritance. Feature inheritance is similar to service inheritance except feature inheritance is limited to a portion of a service. An example of feature inheritance is where a parent, the first user having the PDK **102***b*, allows a child, the second user, to play a teen video game or access a specific website while the parent is present. The child is in possession of the hybrid device **1102***b*, and when in proximity, it enables the computer that has the RDC **304** controlling its use and access to the internet. When the parent is in the room or within proximity of the child, the hybrid device **1102***b* then acquires permission from the PDK **102***b* and is then able to pass additional attributes to the RDC **304** of the personal computer or video game that allow a different rating to be in place. When the parent and the PDK **102***b* leave the room, the child's hybrid device **1102***b* loses the privileges and the child must return to lower rated games and sites. Those skilled in the art will recognize how the system **1600** may be integrated as part of a DVD player to control what movies may be viewed. If a movie or other video has selective portions of content that are associated with different ratings, the portions of video content that are output depend on a PDK **102** and a hybrid device **1102***b* and their associated authorizations. This would allow a single DVD and DVD player to present one version of a movie to an adult viewer while providing a different version of a movie to a child. More specifically, violent or mature content would be removed from the version of the movie output by the DVD system when only the child's hybrid device **1102***b* is present.

The system **1600** is also used to provide personality inheritance. Personality inheritance is where the preferences of a user or holder of a first device are shared with a user or holder of a second device which are then be used to make informed decisions or provide guidance to the second device. For example, assume 2 children who are friends like to play video games. Let's assume that each child is associated with a hybrid device **1102***b* that accumulates information related to the purchases, rentals, and play of these games (i.e. the game may have an RDC as well). Around Christmas, the 2 friends choose to exchange game related personality information—hybrid device **1102** to hybrid device **1102**. Now each friend knows what the other one has played, they type of games they like to play, and if a particular game was rented, purchased, played online, etc. Each friend can now go and purchase, using the information in their hybrid device **1102**, a game that they want to give to the other friend for Christmas. In a second example, a work colleague has collected information on the internet related to a specific subject and wants to now share that information with a second colleague. Personality Inheritance can be done via accumulation in the hybrid device **1102**, the PDK **102** or via a backend server or both.

The hybrid device **1102***b* is also particularly advantages for automatically disabling a service or feature. The concept of "service and/or feature disability" is to remove a capability when a device is within proximity of a zone. There are conditions where it is highly desirable to disable a function in a portable device. An example is cell phones in movie theatres, or phone cameras in an office building, etc. In these settings, it is possible that the present invention disables or changes the personality or feature set of a device based on the presence of the RDC **304**. For example, in a theatre having an associated RDC, any phone that includes the hybrid device **1102** is placed into a vibrate mode, silent mode, or disabled. When the person leaves the theatre, the phone would return to its normal operation. Of course, the user may still need to have their PDK **102** to obtain service, but both of these features can work in conjunction with the other feature. In another example, when an outside vendor attends a meeting for a corporation, his/her cell phone camera is disabled and possibly his/her phone volume is lowered. There are features that

APPLE EXHIBIT 1054
APPLE v. PROXENSE
IPR2024-00783

can be controlled by the PDK **102**, RDC **304** or the hybrid device **1102** located in a corporate office environment. In addition to the switching (or inhibiting) of features when visiting a facility, these same types of attributes can change when any PDK **102**, RDC **304** or hybrid device **1102** comes in to proximity of any other PDK **102**, RDC **304** or hybrid device **1102**. The above examples described how the functionality of a portable device changes depending upon the devices in its vicinity. In addition, the operational state of the fixed (or semi-portable) type of devices could change as well. For example, the parents are watching an R-rated movie and a pre-teen child walks in the room. The movie becomes immediately blocked (or paused) by the display device so that the pre-teen is protected against the content. In another example, an employee of a recreational facility carries an ID badge including a PDK **102**. The recreational facility provides areas for access by customers only, not for employees during predefined hours. When an employee gets close to the entrance, their PDK **102** is recognized by the RDC controlling the door locks, and the employee is not permitted into the area.

Finally, the hybrid device **1102** has been described above as being capable of propagating information between the PDK **102** and the RDC **304**. Those skilled in the art will recognize that in environments where there are a plurality of hybrid devices **1102**, there are any number of communication paths that can be established between the plurality of hybrid devices **1102** by effectively creating a "daisy chain" of PDKs **102** an RDCs **304** to propagate information from one hybrid device **1102** to another. Such a network of hybrid devices **1102** provides the capability for complex decisions and/or capabilities. There can be any number of information and control transfers between devices having an associated hybrid device **102** such as but not limited to portable to portable, portable to fixed, fixed to fixed, and backend equipment. In such an environment, any device with an associated hybrid device **1102** is able to allow, remove, or alter, the features and capabilities of any other device having an associated hybrid device **102** given the proper authority.

Various other modifications, changes and variations which will be apparent to those skilled in the art may be made in the arrangement, operation and details of the method and apparatus of the present invention disclosed herein without departing from the spirit and scope of the invention as defined in the appended claims. Therefore, the scope of the invention should be determined by the appended claims and their legal equivalent.

The invention claimed is:

1. A hybrid device comprising:

an integrated personal digital key (PDK) for storing local, secured biometric information for authenticating a user and capable of communicating wirelessly with an external receiver-decoder circuit (RDC); and

an integrated RDC for communicating wirelessly with at least one external PDK within a proximity zone, the integrated RDC coupled to the integrated PDK by a first signal line for communication, the integrated RDC coupled to at least one other component of the hybrid device by a second signal line, one or more of the integrated RDC and integrated PDK enabling one or more of an application, a function, and a service.

2. The hybrid device of claim **1**, wherein at least one of the one or more of the application, the function, and the service are enabled at least in part on the hybrid device.

3. The hybrid device of claim **1**, wherein at least one of the one or more of the application, the function, and the service are enabled at least in part on a device external to the hybrid device and communicatively coupled to the external RDC.

4. The hybrid device of claim **1**, wherein the local, secured biometric information for authenticating a user is based on one or more of a fingerprint, palm print, a retinal scan, an iris scan, a photograph, a signature, a voice sample, DNA and RNA.

5. The hybrid device of claim **1**, wherein the integrated PDK stores local, secured financial information.

6. The hybrid device of claim **1**, wherein the integrated PDK stores local, secured financial information and at least one of the one or more of the application, the function, and the service enabled completes a financial transaction based on the financial information.

7. The hybrid device of claim **1**, wherein the hybrid device is a cell phone.

8. The hybrid device of claim **1**, wherein the external PDK is included in jewelry.

9. The hybrid device of claim **1**, comprising a storage for inheritance information.

10. A method comprising:

creating a first wireless link between an integrated receiver-decoder circuit (RDC) of a hybrid device and an external personal digital key (PDK), the hybrid device including an integrated PDK and the integrated RDC, wherein the integrated PDK stores local, secured biometric information for authenticating a user;

receiving a first signal at the integrated RDC via the first wireless link from the external PDK;

generating an enablement signal enabling one or more of an application, a function and a service.

11. The method of claim **10** further comprising:

sending the enablement signal to the hybrid device, wherein at least one of the one or more of the application, the function, and the service are enabled at least in part on the hybrid device.

12. The method of claim **10** further comprising:

sending the enablement signal to the hybrid device, wherein at least one of the one or more of the application, the function, and the service are enabled at least in part on a device external to the hybrid device and communicatively coupled to the external RDC.

13. The method of claim **10**, wherein the local, secured biometric information for authenticating a user is based on one or more of a fingerprint, palm print, a retinal scan, an iris scan, a photograph, a signature, a voice sample, DNA and RNA.

14. The method of claim **10**, wherein the integrated PDK stores local, secured financial information.

15. The method of claim **10**, wherein the hybrid device is a cell phone.

16. The method of claim **10**, wherein the external PDK is included in jewelry.

17. The method of claim **10**, wherein the integrated PDK is electrically coupled to the integrated RDC, and the method further comprises:

creating a second wireless link between the integrated PDK and an external RDC; and

sending the enablement signal from the integrated PDK to the external RDC using the second wireless link, the enablement signal based on financial information stored locally and securely on the integrated PDK and used to complete a financial transaction.

18. The method of claim **10**, wherein the first signal includes inheritance information.

19. The method of claim **10**, wherein the external PDK is included in a watch.

APPLE EXHIBIT 1054
APPLE v. PROXENSE
IPR2024-00783

20. The hybrid device of claim **1**, wherein the external PDK is included in a watch.

* * * * *

APPLE EXHIBIT 1054
APPLE v. PROXENSE
IPR2024-00783