US011094149B2

(12) **United States Patent**
Fujiwara et al.

(10) **Patent No.: US 11,094,149 B2**
(45) **Date of Patent: Aug. 17, 2021**

(54) **LOCKING AND UNLOCKING SYSTEM, SERVER USED FOR LOCKING AND UNLOCKING SYSTEM AND METHOD FOR EXECUTING LOCKING AND UNLOCKING SYSTEM**

(71) Applicant: **TOYOTA JIDOSHA KABUSHIKI KAISHA**, Toyota (JP)

(72) Inventors: **Yasuhisa Fujiwara**, Miyoshi (JP); **Yuichiro Haruna**, Oyama (JP)

(73) Assignee: **TOYOTA JIDOSHA KABUSHIKI KAISHA**, Toyota (JP)

(*) Notice: Subject to any disclaimer, the term of this patent is extended or adjusted under 35 U.S.C. 154(b) by 0 days.

(21) Appl. No.: **15/632,854**

(22) Filed: **Jun. 26, 2017**

(65) **Prior Publication Data**

US 2017/0372547 A1 Dec. 28, 2017

(30) **Foreign Application Priority Data**

Jun. 28, 2016 (JP) JP2016-128204

(51) **Int. Cl.**
G07C 9/00 (2020.01)
G06F 21/45 (2013.01)
(Continued)

(52) **U.S. Cl.**
CPC ***G07C 9/00174*** (2013.01); ***G06F 21/44*** (2013.01); ***G06F 21/45*** (2013.01);
(Continued)

(58) **Field of Classification Search**
CPC G06Q 10/02; G06Q 10/1093; G06Q 30/0645; G06Q 50/30; G07C 2009/00396;
(Continued)

(56) **References Cited**

U.S. PATENT DOCUMENTS

9,171,268 B1 10/2015 Penilla et al.
9,367,217 B2 6/2016 Moore, Jr.
(Continued)

FOREIGN PATENT DOCUMENTS

CN 107545628 A 1/2018
JP 2002183563 A 6/2002
(Continued)

OTHER PUBLICATIONS

Non-Final Office Action dated Jul. 6, 2018; issued by the U.S. Patent and Trademark Office in U.S. Appl. No. 15/631,635, 11 pages.
(Continued)

Primary Examiner — Brian A Zimmerman
Assistant Examiner — Kevin Lau
(74) *Attorney, Agent, or Firm* — Hunton Andrews Kurth LLP

(57) **ABSTRACT**

A locking and unlocking system includes a portable terminal and a server. The portable terminal includes a first reception unit configured to receive authentication information used for locking and unlocking of a vehicle or a facility from the server, and a first transmission unit configured to transmit a signal requesting the locking or the unlocking to a device provided in the vehicle or the facility. The signal includes the authentication information. The server includes an acquisition unit configured to acquire schedule information including a date when the vehicle or the facility is reserved and first identification information of a user, from another server configured to perform schedule management, and a second transmission unit configured to transmit the authentication information to the portable terminal of the user, based on the schedule information.

2 Claims, 4 Drawing Sheets

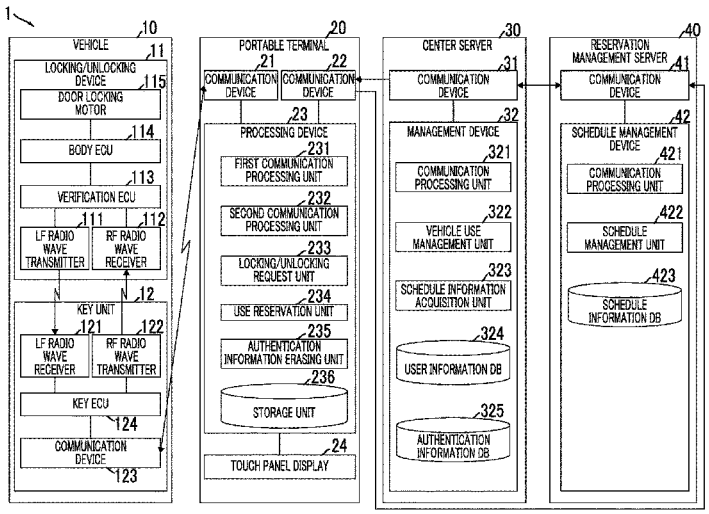

(51) **Int. Cl.**

G07B 15/02	(2011.01)
G06F 21/44	(2013.01)
H04L 29/08	(2006.01)

(52) **U.S. Cl.**
CPC ***G07B 15/02*** (2013.01); ***G07C 9/00571*** (2013.01); *G06F 2221/2129* (2013.01); *G07C 2009/00769* (2013.01); *H04L 67/325* (2013.01)

(58) **Field of Classification Search**
CPC G07C 9/00896; G07C 2009/00507; G07C 2009/00865; G07C 2009/00936; G07C 2009/00769; G07C 9/00174; G06F 21/44; G06F 2221/2129; H04L 67/325
See application file for complete search history.

(56) **References Cited**

U.S. PATENT DOCUMENTS

2014/0337862	A1*	11/2014	Valencia	G06F 8/71 719/313
2015/0040203	A1*	2/2015	Qian	G06F 21/32 726/7
2015/0267438	A1*	9/2015	Martinez	E05B 47/0001 70/278.1
2016/0044472	A1*	2/2016	Person	H04W 4/14 705/5
2016/0140649	A1*	5/2016	Kleve	G06Q 30/0645 705/307
2017/0134382	A1*	5/2017	Darnell	H04L 63/10
2017/0178035	A1*	6/2017	Grimm	B60R 25/241
2017/0372546	A1	12/2017	Haruna	
2017/0372547	A1	12/2017	Fujiwara et al.	

FOREIGN PATENT DOCUMENTS

JP	2004-190233	A	7/2004
JP	2006-118122	A	5/2006
JP	2013-234519	A	11/2013
JP	2014040717	A	3/2014
JP	2014-148875	A	8/2014
JP	2014531642	A	11/2014
JP	2016004342	A	1/2016
WO	2013034592	A1	3/2013

OTHER PUBLICATIONS

United States Patent and Trademark Office, Notice of Allowability issued to U.S. Appl. No. 15/631,635 dated Mar. 12, 2019, 13 pages.
United States Patent and Trademark Office, Supplemtntal Notice of Allowability issued to U.S. Appl. No. 15/631,635 dated Apr. 26, 2019, 3 pages.
United States Patent and Trademark Office, Non-Final Office Action issued to U.S. Appl. No. 16/434,422 dated Oct. 4, 2019, 12 pages.
United States Patent and Trademark Office, Corrected Notice of Allowability issued to U.S. Appl. No. 15/631,635 dated Sep. 23, 2019, 9 pages.
United States Patent and Trademark Office, Supplemental Notice of Allowability issued to U.S. Appl. No. 15/631,635 dated Jun. 26, 2019, 3 pages.
United States Patent and Trademark Office, Supplemental Notice of Allowability issued to U.S. Appl. No. 15/631,635 dated Oct. 15, 2019, 6 pages.
United States Patent and Trademark Office, Supplemental Notice of Allowability issued to U.S. Appl. No. 16/434,422 dated Feb. 3, 2020, 4 pages.
United States Patent and Trademark Office, Non-Final Office Action issued to U.S. Appl. No. 16/434,422 dated Nov. 5, 2020, 15 pages.
Final Office Action, United States Patent and Trademark Office, issued to U.S. Appl. No. 16/434,422 dated May 12, 2021, 14 pages.

* cited by examiner

FIG. 1

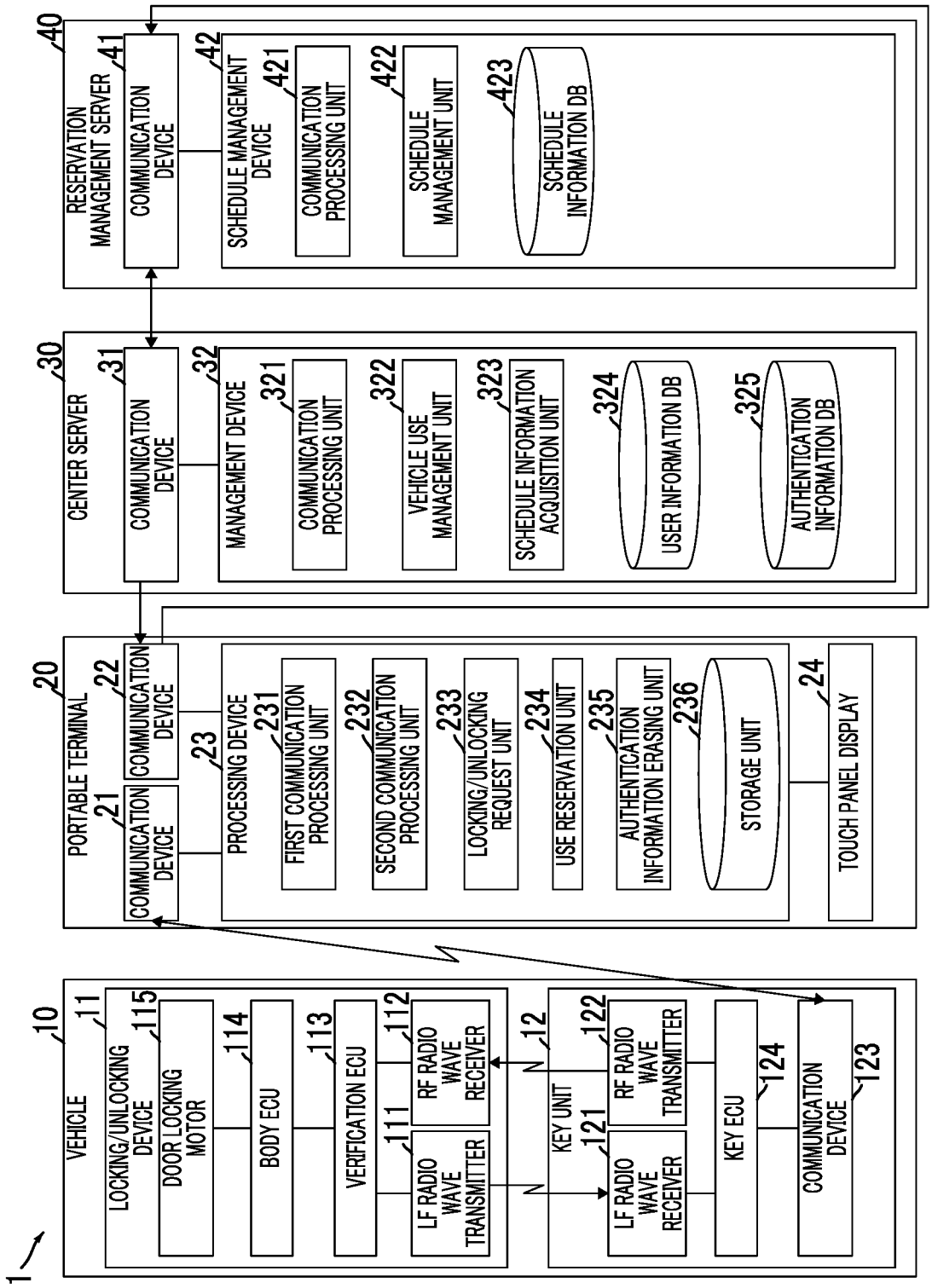
1
10
VEHICLE
11
LOCKING/UNLOCKING DEVICE
115
DOOR LOCKING MOTOR
114
BODY ECU
113
VERIFICATION ECU
112
RF RADIO WAVE RECEIVER
111
LF RADIO WAVE TRANSMITTER
12
KEY UNIT
121
LF RADIO WAVE RECEIVER
122
RF RADIO WAVE TRANSMITTER
124
KEY ECU
123
COMMUNICATION DEVICE
20
PORTABLE TERMINAL
21
COMMUNICATION DEVICE
22
COMMUNICATION DEVICE
23
PROCESSING DEVICE
231
FIRST COMMUNICATION PROCESSING UNIT
232
SECOND COMMUNICATION PROCESSING UNIT
233
LOCKING/UNLOCKING REQUEST UNIT
234
USE RESERVATION UNIT
235
AUTHENTICATION INFORMATION ERASING UNIT
236
STORAGE UNIT
24
TOUCH PANEL DISPLAY
30
CENTER SERVER
31
COMMUNICATION DEVICE
32
MANAGEMENT DEVICE
321
COMMUNICATION PROCESSING UNIT
322
VEHICLE USE MANAGEMENT UNIT
323
SCHEDULE INFORMATION ACQUISITION UNIT
324
USER INFORMATION DB
325
AUTHENTICATION INFORMATION DB
40
RESERVATION MANAGEMENT SERVER
41
COMMUNICATION DEVICE
42
SCHEDULE MANAGEMENT DEVICE
421
COMMUNICATION PROCESSING UNIT
422
SCHEDULE MANAGEMENT UNIT
423
SCHEDULE INFORMATION DB

FIG. 2

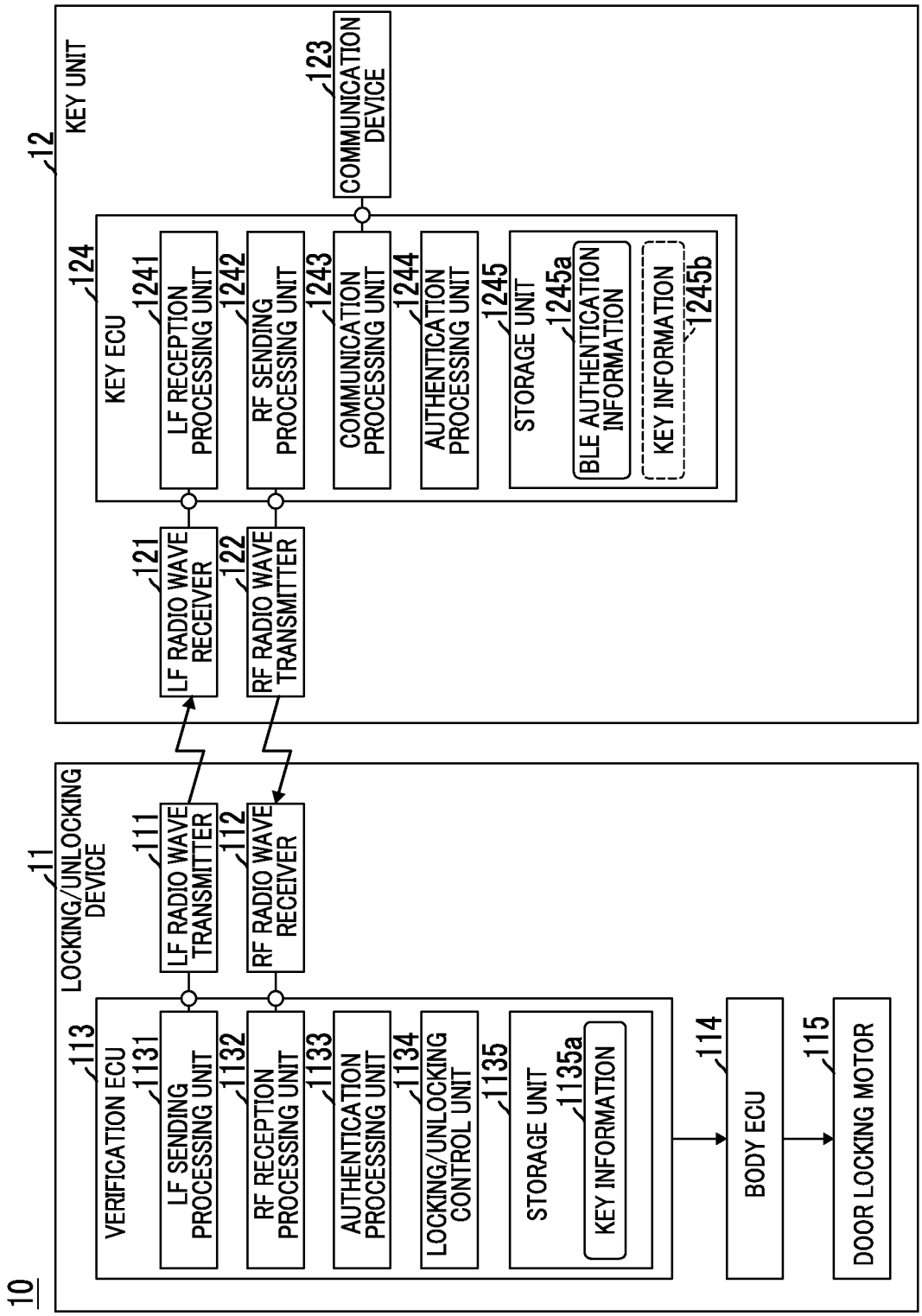
10
11
LOCKING/UNLOCKING DEVICE
113
VERIFICATION ECU
1131
LF SENDING PROCESSING UNIT
1132
RF RECEPTION PROCESSING UNIT
1133
AUTHENTICATION PROCESSING UNIT
1134
LOCKING/UNLOCKING CONTROL UNIT
1135
STORAGE UNIT
1135a
KEY INFORMATION
111
LF RADIO WAVE TRANSMITTER
112
RF RADIO WAVE RECEIVER
114
BODY ECU
115
DOOR LOCKING MOTOR
12
KEY UNIT
124
KEY ECU
1241
LF RECEPTION PROCESSING UNIT
1242
RF SENDING PROCESSING UNIT
1243
COMMUNICATION PROCESSING UNIT
1244
AUTHENTICATION PROCESSING UNIT
1245
STORAGE UNIT
1245a
BLE AUTHENTICATION INFORMATION
1245b
KEY INFORMATION
121
LF RADIO WAVE RECEIVER
122
RF RADIO WAVE TRANSMITTER
123
COMMUNICATION DEVICE

FIG. 3

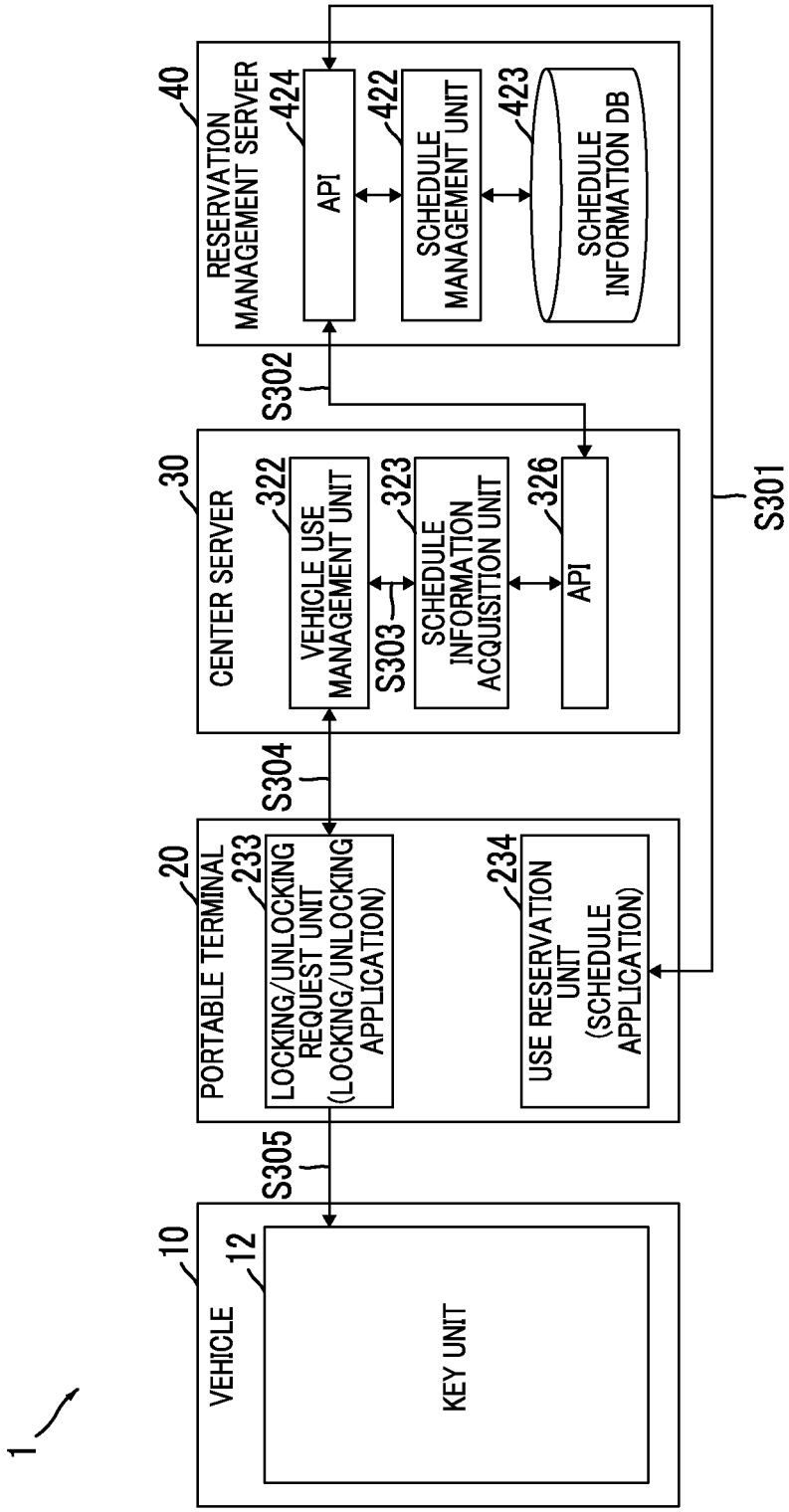
1
10
VEHICLE
12
KEY UNIT
S305
20
PORTABLE TERMINAL
233
LOCKING/UNLOCKING REQUEST UNIT (LOCKING/UNLOCKING APPLICATION)
234
USE RESERVATION UNIT (SCHEDULE APPLICATION)
S304
30
CENTER SERVER
322
VEHICLE USE MANAGEMENT UNIT
S303
323
SCHEDULE INFORMATION ACQUISITION UNIT
326
API
S302
40
RESERVATION MANAGEMENT SERVER
424
API
422
SCHEDULE MANAGEMENT UNIT
423
SCHEDULE INFORMATION DB
S301

FIG. 4

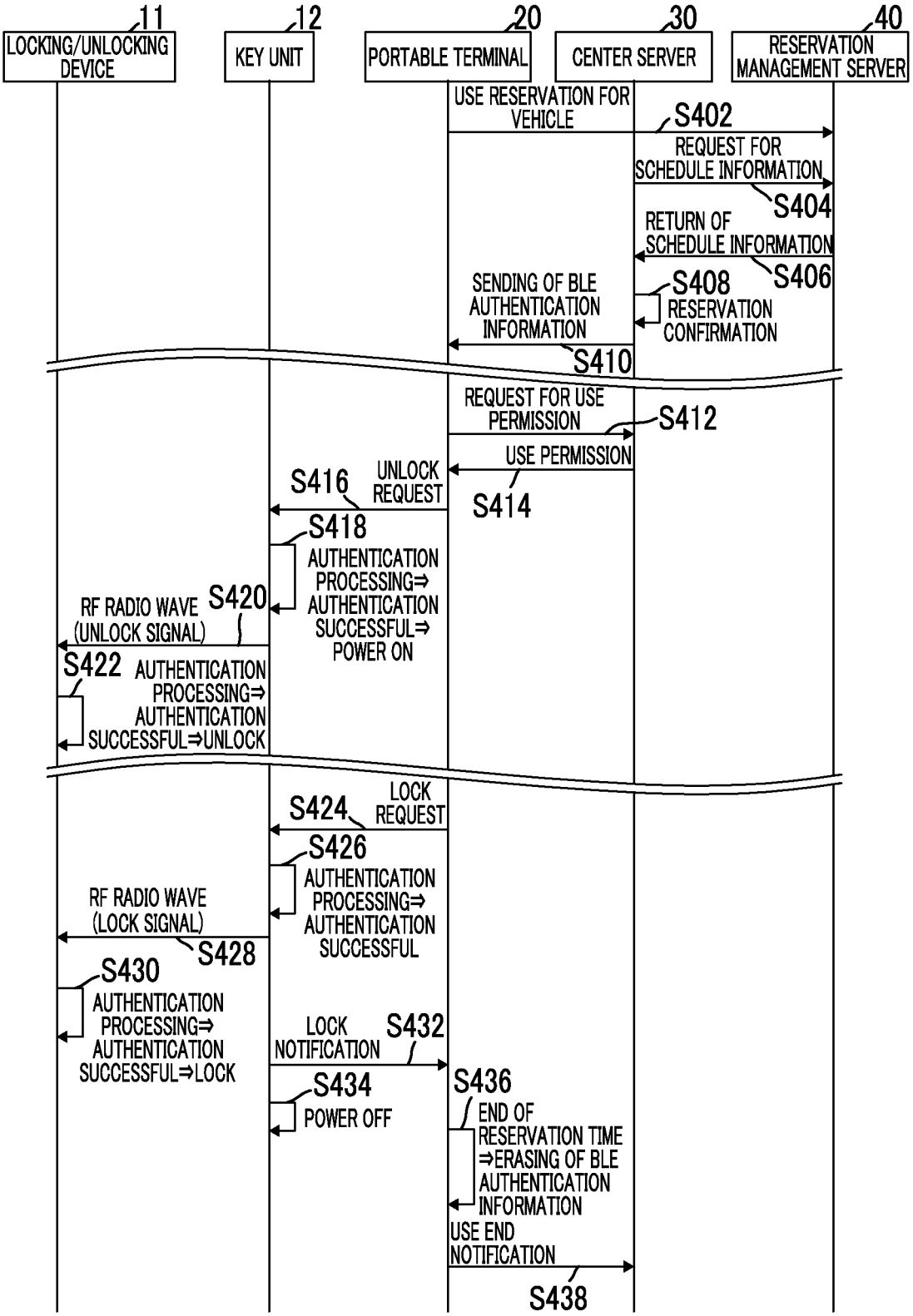
11
LOCKING/UNLOCKING DEVICE
12
KEY UNIT
20
PORTABLE TERMINAL
30
CENTER SERVER
40
RESERVATION MANAGEMENT SERVER
USE RESERVATION FOR VEHICLE
S402
REQUEST FOR SCHEDULE INFORMATION
S404
RETURN OF SCHEDULE INFORMATION
S406
S408
RESERVATION CONFIRMATION
SENDING OF BLE AUTHENTICATION INFORMATION
S410
REQUEST FOR USE PERMISSION
S412
USE PERMISSION
S414
UNLOCK REQUEST
S416
S418
AUTHENTICATION PROCESSING⇒ AUTHENTICATION SUCCESSFUL⇒ POWER ON
S420
RF RADIO WAVE (UNLOCK SIGNAL)
S422
AUTHENTICATION PROCESSING⇒ AUTHENTICATION SUCCESSFUL⇒UNLOCK
LOCK REQUEST
S424
S426
AUTHENTICATION PROCESSING⇒ AUTHENTICATION SUCCESSFUL
RF RADIO WAVE (LOCK SIGNAL)
S428
S430
AUTHENTICATION PROCESSING⇒ AUTHENTICATION SUCCESSFUL⇒LOCK
LOCK NOTIFICATION
S432
S434
POWER OFF
S436
END OF RESERVATION TIME ⇒ERASING OF BLE AUTHENTICATION INFORMATION
USE END NOTIFICATION
S438

LOCKING AND UNLOCKING SYSTEM, SERVER USED FOR LOCKING AND UNLOCKING SYSTEM AND METHOD FOR EXECUTING LOCKING AND UNLOCKING SYSTEM

INCORPORATION BY REFERENCE

The disclosure of Japanese Patent Application No. 2016-128204 filed on Jun. 28, 2016 including the specification, drawings and abstract is incorporated herein by reference in its entirety.

BACKGROUND

1. Technical Field

The present disclosure relates to a locking and unlocking system, a server used for a locking and unlocking system, and a method for executing a locking and unlocking system.

2. Description of the Related Art

Key management systems that receive authentication information for unlocking a vehicle from a server via a network with a portable terminal and are available using this portable terminal as an electronic key are disclosed (for example, refer to Japanese Patent Application Publication No. 2006-118122 (JP 2006-118122 A).

By using this configuration, for example, in a case where a plurality of users use the same vehicle in different time zones like rental cars, share cars, and company cars, it is possible to save effort for transfer of an electronic key, or the like, and user convenience is improved.

Additionally, the same technique can also be used for locking and unlocking of the same facility (for example, such as conference rooms, resorts, or gymnasiums) used in different time zone by a plurality of users, and user convenience is improved by using a portable terminal as an electronic key for a locking/unlocking device installed in the facility.

SUMMARY

However, in a case where a plurality of users use the same vehicle, the same facility, or the like in different times, the operation that reserves an object vehicle or an object facility and the operation of acquiring the authentication information may need to be separately performed by portable terminals, and may lead to the inconvenience.

Thus, the disclosure provides a locking and unlocking system, a server used for a locking and unlocking system, and a method for executing a locking and unlocking system that can further improve user convenience in a case where a plurality of users use the same vehicle or facility in different time zones.

A first aspect of the disclosure provides a locking and unlocking system. The locking and unlocking system according to the first aspect includes a portable terminal and a server communicable with the portable terminal. The portable terminal includes a first reception unit configured to receive authentication information from the server, the authentication information being used for locking and unlocking of a vehicle or a facility, and a first transmission unit configured to transmit a signal, the signal requesting the locking or the unlocking to a predetermined device provided in the vehicle or the facility, the signal including the authentication information. The server includes an acquisition unit configured to acquire schedule information from another server configured to perform schedule management, the schedule information including a date at which the vehicle or the facility is reserved so that the vehicle or the facility is used, the schedule information including first identification information of a user who has reserved the vehicle or the facility, and a second transmission unit configured to transmit the authentication information to the portable terminal of the user, based on the schedule information acquired by the acquisition unit.

According to the above-described aspect, the server of the locking and unlocking system transmits the authentication information used for the locking and unlocking of the vehicle or the facility to the portable terminal of the user who has reserved the vehicle or the facility, on the basis of the acquired schedule information of the vehicle or the facility. For that reason, it is not necessary to perform the operation for acquiring the authentication information used for the locking and unlocking of the vehicle or the facility, and user convenience can be improved.

In the first aspect of the disclosure, the schedule information may be set from the portable terminal or another terminal, the other terminal being accessible to a schedule management application program, by using the schedule management application program. The schedule management application program may be executed by the other server, the schedule management application program being available through the Web.

According to this aspect, since the user of the portable terminal can automatically acquire the authentication information simply by writing the schedule information of the vehicle or the facility, using a Web application from the portable terminal or the other terminal, user convenience can be improved.

In the first aspect of the disclosure, the server may include a vehicle use management unit and a user information database where a second identification information of the user is registered in advance. The vehicle use management unit may be configured to specify the user and the portable terminal of the user, by collating the first identification information with the second identification information, and transmit the authentication information to the portable terminal, by extracting the date at which the user uses the vehicle or the facility from the schedule information.

A second aspect of the disclosure provides a server used for a locking and unlocking system. The locking and unlocking system according to the second aspect includes an acquisition unit configured to acquire schedule information from another server configured to perform schedule management, the schedule information including a date at which a vehicle or a facility is reserved so that the vehicle or the facility is used, the schedule information including identification information of a user who has reserved the vehicle or the facility, and a transmission unit configured to transmit authentication information used for locking and unlocking of the vehicle or the facility to a portable terminal of the user, based on the schedule information.

A third aspect of the disclosure provides a method for executing a locking and unlocking system. The method according to the third aspect includes acquiring schedule information including a date at which use of a vehicle or a facility is reserved so that the vehicle or the facility is used, and first identification information of a user who has reserved the vehicle or the facility, from another server that performs schedule management, and transmitting authentication information used for locking and unlocking of the

vehicle or the facility to a portable terminal of the user, based on the schedule information.

According to this aspect, the disclosure can provide a locking and unlocking system, a server used for a locking and unlocking system, and a method for executing a locking and unlocking system that can further improve user convenience in a case where a plurality of users use the same vehicle or facility in different time zones.

BRIEF DESCRIPTION OF THE DRAWINGS

Features, advantages, and technical and industrial significance of exemplary embodiments of the disclosure will be described below with reference to the accompanying drawings, in which like numerals denote like elements, and wherein:

FIG. **1** is a block diagram schematically illustrating an example of the configuration of a locking and unlocking system;

FIG. **2** is a configuration view schematically illustrating an example of the configuration of a locking/unlocking device and a key unit;

FIG. **3** is a conceptual diagram conceptually illustrating the operation of the locking and unlocking system; and

FIG. **4** is a sequence diagram illustrating an example of the operation of the locking and unlocking system.

DETAILED DESCRIPTION OF EMBODIMENTS

Hereinafter, embodiments will be described with reference to the drawings.

First, the configuration of a locking and unlocking system **1** related to the present embodiment will be described with reference to FIG. **1** and FIG. **2**.

FIG. **1** is a block diagram schematically illustrating an example of the configuration of the locking and unlocking system **1** related to the present embodiment. FIG. **2** is a block diagram schematically illustrating an example of the configuration of a locking/unlocking device **11** and a key unit **12** which are included in a vehicle **10**.

The locking and unlocking system **1** includes the vehicle **10**, a portable terminal **20**, a center server **30**, and a reservation management server **40**.

The vehicle **10** is an object for locking/unlocking (locking and unlocking) in the locking/unlocking system **1**. The vehicle **10** includes the locking/unlocking device **11** and the key unit **12**.

In addition, as the vehicle **10** related to the present embodiment, rental cars, share cars (it does not matter whether they are provided by providers or individuals), company cars within organizations, or the like that are available in different time zones by a plurality of users are assumed.

The locking/unlocking device **11** performs locking/unlocking of doors of the vehicle **10** according to a lock signal and an unlock signal that are transmitted as radio waves (hereinafter referred to as "RF radio waves") of a radio frequency: high frequency (RF) band (for example, 300 MHz to 3 GHz) from the key unit **12**. The locking/unlocking device **11** includes a low frequency (LF) radio wave transmitter **111**, an RF radio wave receiver **112**, a verification electronic control unit (ECU) **113**, a body ECU **114**, and a door locking motor **115**.

In addition, the locking/unlocking device **11** operates with the electrical power supplied from an auxiliary engine battery (not illustrated) loaded on the vehicle **10**.

The LF radio wave transmitter **111** is built, for example, in a center console or door handle within a vehicle compartment, and transmits radio waves (hereinafter referred to as "LF radio waves") of an LF band (for example, 30 Hz to 300 kHz) under the control of the verification ECU **113** (LF sending processing unit **1131** to be described below).

The RF radio wave receiver **112** is provided, for example, within a trim of a trunk of the vehicle **10**, and receives the RF radio waves under the control of the verification ECU **113** (RF reception processing unit **1132** to be described below).

The verification ECU **113** is an electronic control unit that performs control on the locking/unlocking of the doors of the vehicle **10** according to the lock signal and the unlock signal that are received from the key unit **12**. The verification ECU **113** is mainly configured, for example, with a microcomputer, and realizes various kinds of control processing by executing a program stored in a ROM on a CPU. The verification ECU **113** includes the LF sending processing unit **1131**, the RF reception processing unit **1132**, an authentication processing unit **1133**, and a locking/unlocking control unit **1134** as functional units realized by executing one or more programs on the CPU. Additionally, the verification ECU **113** includes a storage unit **1135** realized as a storage region of an internal memory.

The LF sending processing unit **1131** performs the processing of transmitting the LF radio waves to the inside of the vehicle compartment and the outside of the vehicle compartment through the LF radio wave transmitter **111**.

The RF reception processing unit **1132** performs the processing of receiving the RF radio waves through the RF radio wave receiver **112**. Specifically, the RF reception processing unit **1132** receives the lock signal and the unlock signal that are transmitted as the RF radio waves from the key unit.

The authentication processing unit **1133** performs authentication on the basis of key information (key information **1245***b* to be described below) included in the lock signal or the unlock signal in a case where the RF reception processing unit **1132** has received the lock signal or the unlock signal. Specifically, the authentication processing unit **1133** determines a case where the key information **1135***a* registered in advance in the storage unit **1135** and the key information included in the lock signal or the unlock signal coincide with each other as a authentication success and determines a case where the key information and the lock signal or the unlock signal do not coincide with each other as a authentication failure.

The locking/unlocking control unit **1134** transmits a locking command (in a case where the RF reception processing unit **1132** has received the lock signal) or an unlocking command (in a case where the RF reception processing unit **1132** has received the unlock signal) to the body ECU **114**, through vehicle-mounted networks, such as a controller area network (CAN), in a case where the authentication performed by the authentication processing unit **1133** is successful.

The body ECU **114** is an electronic control unit that performs the operation control of the door locking motor **115** that is communicably connected thereto by a one-to-one communication line or the like. The body ECU **114** outputs a control command for making the door locking motor **115** perform a locking operation according to the locking command from the verification ECU **113**. Additionally, the body ECU **114** outputs a control command for making the door

locking motor **115** perform an unlocking operation according to the unlocking command from the verification ECU **113**.

The door locking motor **115** is a known electric actuator that locks and unlocks the doors (including a trunk lid, a backdoor, and the like) of the vehicle **10**, according to the control command from the body ECU **114**.

The key unit **12** is arranged inside the vehicle **10** (inside the vehicle compartment), and transmits the lock signal and the unlock signal to the locking/unlocking device **11** as the RF radio waves according to each of a locking request and an unlocking request transmitted from the portable terminal **20**. The key unit **12** includes an LF radio wave receiver **121**, RF radio wave transmitter **122**, a communication device **123**, and a key ECU **124**.

In addition, the key unit **12** may be arranged at a position where visual recognition is impossible from a user who sits down on each seat of the vehicle **10** (for example, inside of a glove box, a center console box, or the like). Additionally, the key unit **12** may be fixed to the vehicle **10** or may not be fixed thereto. Additionally, the key unit **12** may be operated by a built-in button cell or the like, or may be operated with the electrical power supplied from the auxiliary engine battery loaded on the vehicle **10**.

The LF radio wave receiver **121** performs the processing of receiving the LF radio waves under the control of the key ECU **124** (an LF reception processing unit **1241** to be described below).

The RF radio wave transmitter **122** performs the processing of transmitting the RF radio waves under the control of the key ECU **124** (an RF sending processing unit **1242** to be described below).

The communication device **123** is an arbitrary device that performs communication with the portable terminal **20** at a relatively short distance (such a distance that communication is possible between the inside of the vehicle compartment and the outside of the vehicle compartment) according to a predetermined telecommunication standard under the control performed by the key ECU **124**. The communication device **123** may be, for example, a BLE communication module that communicates with the portable terminal **20** in conformity with a Bluetooth (registered trademark) Low Energy (BLE) telecommunication standard. Hereinafter, description is continued on the premise that the telecommunication standard adopted by the communication device **123** conforms on BLE communication.

In addition, the communication device **123** may be a communication device conforming to a short-distance telecommunication standard (for example, NFC (Near Field Communication) standard) in which a communicable distance is very short. In this case, the communication device **123** may be built at a position (for example, inside of a door handle) or the like near a body surface outside the vehicle compartment of the vehicle **10**. Accordingly, even in a case where the communicable distance of the communication device **123** is very short, the key unit **12** (key ECU **124**) can communicate with the portable terminal **20** outside the vehicle compartment.

The key ECU **124** is an electronic control unit that performs the control processing of transmitting the lock signal and the unlock signal on the locking/unlocking device **11** according to each of the locking request and the unlocking request that are received from the portable terminal **20**. The key ECU **124** is mainly configured, for example, with a microcomputer, and realizes various kinds of control processing by executing various programs stored in the ROM on the CPU. The key ECU **124** includes the LF reception processing unit **1241**, the RF sending processing unit **1242**, a communication processing unit **1243**, and an authentication processing unit **1244** as the functional units realized by executing one or more programs. Additionally, the key ECU **124** includes, for example, a storage unit **1245** realized as the storage region of the internal memory.

The LF reception processing unit **1241** performs the processing of receiving the LF radio waves through the LF radio wave receiver **121**. For example, the LF reception processing unit **1241** receives the LF radio waves transmitted from the locking/unlocking device **11**.

The RF sending processing unit **1242** performs the processing of transmitting the RF radio wave through the RF radio wave transmitter **122**. For example, the RF sending processing unit **1242** performs the processing of transmitting the lock signal (in a case where the communication processing unit **1243** has received the locking request) including the key information **1245*b*** to be described below or the unlock signal (in a case where the communication processing unit **1243** has received the unlocking request) in a case where the authentication performed by the authentication processing unit **1244** is successful.

The communication processing unit **1243** performs communication processing with a portable terminal **20** through the communication device **123**. For example, the communication processing unit **1243** receives the locking request and the unlocking request from the portable terminal **20** through the communication device **123**. Additionally, the communication processing unit **1243** transmits notification (locking notification), showing that the vehicle **10** has been locked, to the portable terminal **20** according to a request from the authentication processing unit **1244** in a case where the lock signal has been transmitted from RF sending processing unit **1242** to the locking/unlocking device **11** according to the locking request from the portable terminal **20**. Accordingly, the portable terminal **20** can grasp that the vehicle **10** has been locked.

The authentication processing unit **1244** performs authentication based on BLE authentication information (an example of first authentication information) that is included in the locking request or the unlocking request and is set in advance uniquely with respect to the key unit **12**, that is, matched with the key unit **12**, in a case where the communication processing unit **1243** has received the locking request or the unlocking request from the portable terminal **20**. Specifically, the authentication processing unit **1244** determines a case where BLE authentication information **1245*a*** registered in advance in the storage unit **1245** and the BLE authentication information included in the locking request or the unlocking request coincide with each other as the authentication success, and determines a case where these kinds of BLE authentication information do not coincide with each other as the authentication failure.

Additionally, the authentication processing unit **1244** turns on a power source of the key unit **12** in a case where the authentication corresponding to the unlocking request that the communication processing unit **1243** has received is successful. Then, the authentication processing unit **1244** sends a transmission request to the RF sending processing unit **1242**, and transmits the unlock signal to the locking/unlocking device **11**.

Additionally, the authentication processing unit **1244** sends the transmission request to the RF sending processing unit **1242**, transmits the lock signal to the locking/unlocking device **11**, then sends a transmission request to the communication processing unit **1243**, and transmits the locking notification to the portable terminal **20** in a case where the

authentication corresponding to the locking request that the communication processing unit **1243** has received is successful. Then, the authentication processing unit **1244** turns off the power source of the key unit **12**.

In addition, even if the power source of the key unit **12** is in an OFF state, the functions of the communication processing unit **1243**, the authentication processing unit **1244**, and the like of which the power consumption is very small is brought into an available state. Additionally, if the power source of the key unit **12** is turned on from OFF, for example, the LF radio wave receiver **121**, the RF radio wave transmitter **122**, and the like of which the power consumption is large is brought into the available state.

Additionally, the authentication processing unit **1244** performs the processing of restoring the key information **1245***b* stored in the storage unit **1245** to the available state in a case where the authentication is successful. The key information **1245***b* is stored in a state where the key information cannot be used for the purpose of authentication in the locking/unlocking device **11**, for example, due to being in an inaccessible state, being in an encrypted state, or the like. For that reason, the authentication processing unit **1244** changes the right of access to the storage unit **1245** for changing the key information **1245***b* into an accessible state or decrypts the encrypted key information **1245***b* on the basis of the BLE authentication information in a case where the authentication is successful. Accordingly, the RF sending processing unit **1242** can make an access to the key information **1245***b*, which is normally inaccessible, and transmit the lock signal and unlock signal including the key information **1245***b* to the locking/unlocking device **11**, or can transmit the lock signal and the unlock signal including the decrypted key information **1245***b* to the locking/unlocking device **11**. For that reason, the locking/unlocking device **11** (specifically, the authentication processing unit **1133**) can perform suitable authentication on the basis of the key information **1245***b* included in the lock signal and the unlock signal. Additionally, even if a situation where a malicious third party gets the key unit **12** illegally occurs, the theft of the vehicle **10** can be suppressed because the key information **1245***b* within the key unit **12** is made inaccessible to or is encrypted.

The portable terminal **20** is, for example, a smart phone, a tablet terminal, or the like. The portable terminal **20** can perform communication with the center server **30** and the reservation management server **40** in both directions through a predetermined communication network (for example, a cellular-phone network, the Internet network, or the like having a number of base stations as terminals). The portable terminal **20** includes communication devices **21**, **22**, a processing device **23**, and a touch panel display (hereinafter simply referred to as a display) **24**.

The communication device **21** is an arbitrary device that performs communication with the key unit **12** according to the same telecommunication standard as the communication device **123**, and is, for example, the BLE communication module.

The communication device **22** is an arbitrary device that performs communication with the center server **30** and the reservation management server **40** through the predetermined communication network.

The processing device **23** includes a CPU, an auxiliary storage, and the like, and includes a first communication processing unit **231**, a second communication processing unit **232**, a locking/unlocking request unit **233**, a use reservation unit **234**, and the authentication information erasing unit **235**, as functional units realized by executing one or more programs on the CPU. Additionally, the processing device **23** includes a storage unit **236** realized as a storage region within the auxiliary storage.

The first communication processing unit **231** (an example of a first transmission unit) performs radio communication with the key unit **12**, using the communication device **21**, and performs transmission and reception of various signals. For example, the first communication processing unit **231** transmits the lock signal and the unlock signal to the key unit **12** according to a request from the locking/unlocking request unit **233**.

The second communication processing unit **232** (an example of a first reception unit) perform radio communication with a base station using the communication device **22**, and transmits and receives various signals, such as a data signal and a control signal. In the present embodiment, the second communication processing unit **232** performs transmission and reception of various signals between the center server **30** and the reservation management server **40** through the predetermined communication network including the cellular-phone network or the Internet network having the base stations as the terminals. For example, the second communication processing unit **232** receives signals including the BLE authentication information transmitted from the center server **30** to the portable terminal **20**. The BLE authentication information received by the second communication processing unit **232** is stored in the storage unit **236**. Additionally, the second communication processing unit **232** transmits a signal requesting use permission of the vehicle **10** to the center server **30** according to the request from the locking/unlocking request unit **233**, and receives a signal (use permission signal) permitting use of the vehicle **10** from the center server **30**. The "use of the vehicle **10**" includes unlocking the vehicle **10**, getting on the vehicle **10**, turning on an ignition switch of the vehicle **10**, operating the vehicle **10** and making the vehicle travel, and the like. Additionally, the second communication processing unit **232** transmits a signal requesting disclosure of schedule information of the vehicle **10** to the reservation management server **40** according to a request from the use reservation unit **234**, and receives the schedule information (reference data) of the vehicle **10** from the reservation management server **40**. Additionally, the second communication processing unit **232** transmits a signal requesting updating of the schedule information of the vehicle **10** according to the request from the use reservation unit **234**, and receives a reply showing completion of the updating of the schedule information of the vehicle **10** from the reservation management server.

The locking/unlocking request unit **233** displays a graphical user interface (GUI) as an operation screen on a display **24**. The locking/unlocking request unit **233** transmits the locking request including the BLE authentication information or the unlocking request including the BLE authentication information to the key unit **12** via the first communication processing unit **231**, according to a predetermined operation for the GUI. For example, a locking button that requests locking of the vehicle **10**, and an unlocking button that requests unlocking of the vehicle **10** are drawn on the GUI, the locking request is transmitted by touch-operating the locking button, and the unlocking request is transmitted by touch-operating the unlocking button.

In addition, the operation for transmitting the locking request and the unlocking request to the key unit **12** may be not the touch operation for the display **24** but operation for an operating part of hardware provided in the portable terminal **20**. Additionally, in a case where the BLE authentication information is not stored in the storage unit **236** (that

is, in a case where the BLE authentication information is not received from the center server **30**, in a case where the BLE authentication information is erased by the authentication information erasing unit **235**, and the like), the BLE authentication information is not included in the lock signal and the unlock signal. For that reason, even if these lock signal and unlock signal are transmitted to the key unit **12**, the doors of the vehicle **10** cannot be locked or unlocked. Additionally, in a case where the BLE authentication information is not stored in the storage unit **236**, the lock signal and the unlock signal may not be transmitted.

Additionally, the locking/unlocking request unit **233** transmits a signal requesting the use permission of the vehicle **10** including positional information on the portable terminal **20** to the center server **30** via the second communication processing unit **232**, according to a user's predetermined operation for the GUI, at the start of use of the vehicle **10** (before unlocking of the vehicle **10** is performed for the first time). Accordingly, a vehicle use management unit **322** of the center server **30** can receive this signal, and can check that the user has arrived at a parking position of the vehicle **10** on the basis of the positional information on the portable terminal **20** included in this signal. Then, the vehicle use management unit **322** checks that the date of the arrival is immediately before a use start date of the vehicle **10** or within a use reservation date, and transmits the use permission signal to the portable terminal **20**.

In addition, the locking/unlocking request unit **233** may automatically transmit the signal requesting the use permission of the vehicle **10** to the center server **30**, for example, in a case where it is determined that the user has arrived at the parking position of the vehicle **10** and the date of the arrival is immediately before the use start date of the vehicle **10** or within the use reservation date. Additionally, the portable terminal **20** has a known GPS positioning function and a known base station positioning function, and can acquire the positional information on the portable terminal **20** using these positioning functions.

The use reservation unit **234** displays the GUI serving as the operation screen on the display **24**, and performs use reservation of the vehicle **10** according to the user's predetermined operation for the GUI of the display **24**. For example, the use reservation unit **234** requests the schedule information (current reservation status) of the vehicle **10** to the reservation management server **40** via the second communication processing unit **232**. In this case, the use reservation unit **234** transmits a request, including identification information, a password, and the like unique to the vehicle **10**, to the reservation management server **40**. Reservation information (date of each use reservation, utility time, identification information of the user who uses, and the like) of the vehicle **10** is included in the schedule information (specifically, schedule information DB **423** to be described below) of the vehicle **10** stored in the reservation management server **40**. Additionally, the use reservation unit **234** displays the schedule information (current reservation status) of the vehicle **10**, which is received from the reservation management server **40** via the second communication processing unit **232**, on the display **24**. Accordingly, the user can check a vacant time using the schedule information displayed on the display, and can make a reservation for a vacant time zone (a time zone when reservation is not made) of a vehicle **10**. Additionally, the use reservation unit **234** requires updating to schedule information including newly input reservation information (the use reservation date, the utility time, the user's identification information, and the like) via the second communication processing unit **232** in a case where the user has made a reservation for a specific date. Accordingly, the new use reservation by the user of the portable terminal **20** is reflected on the schedule information of the vehicle **10** within the schedule information DB **423**.

In addition, the use reservation of the vehicle **10** may be performed from another terminal (for example, PC or the like capable of being connected with the reservation management server **40** through the predetermined communication network) other than the portable terminal **20**.

The authentication information erasing unit **235** performs the processing of erasing the BLE authentication information, which is received from the center server **30** via the second communication processing unit **232**, from the storage unit **236**. For example, the authentication information erasing unit **235** erases the BLE authentication information in a case where a use end date of the vehicle **10** has elapsed. Accordingly, a situation where the vehicle **10** is made available by the user of the portable terminal **20** except for the use reservation date can be prevented.

In addition, the authentication information erasing unit **235** can check the use end date of the vehicle **10** on the basis of use term information transmitted together with the BLE authentication information from the center server **30**. Additionally, the authentication information erasing unit **235** may acquire the reservation information on the use reservation of the vehicle **10** by the user of the portable terminal **20** from the reservation management server **40** via the use reservation unit **234**, and may check the use end date of the vehicle **10**.

The center server **30** (an example of a server) performs management of a use status of the vehicle **10**. The center server **30** includes a communication device **31** and a management device **32**.

The communication device **31** is an arbitrary device that communicates with the portable terminal **20**, the reservation management server **40**, and the like through the predetermined communication network.

The management device **32** is mainly configured with one or a plurality of computers, and includes a communication processing unit **321**, the vehicle use management unit **322**, and a schedule information acquisition unit **323**, as functional units realized by executing one or more programs on the CPU. Additionally, the management device **32** includes a user information DB **324** and authentication information DB **325** that are stored in an internal auxiliary storage.

The communication processing unit **321** (an example of a second transmission unit) transmits and receives various signals between the portable terminal **20** and the reservation management server **40**, using the communication device **31**. For example, the communication processing unit **321** transmits a signal including the BLE authentication information to the portable terminal **20** according to a request from the vehicle use management unit **322**. Additionally, the communication processing unit **321** receives the signal requesting the use permission of the vehicle **10** from the portable terminal **20**, and transmits the use permission signal of the vehicle **10** to the portable terminal **20** according to the request from the vehicle use management unit **322** corresponding to this signal. Additionally, the communication processing unit **321** transmits the signal requesting the disclosure of the schedule information of the vehicle **10** to the reservation management server **40** according to a request from the schedule information acquisition unit **323**, and receives the schedule information of the vehicle **10** from the reservation management server **40**.

The vehicle use management unit **322** transmits the BLE authentication information to the portable terminal **20** of the

user who has performed the use reservation via the communication processing unit **321**, on the basis of the schedule information of the vehicle **10** acquired by the schedule information acquisition unit **323**. For example, the vehicle use management unit **322** collates the user's identification information included in the reservation information of each use reservation with the user's identification information included in the user information DB **324**, and specifies the user and the portable terminal **20** of the user. Additionally, the vehicle use management unit **322** retrieves the BLE authentication information corresponding to the key unit **12** loaded on the vehicle **10** out of the authentication information DB **325** in which the BLE authentication information is stored in such a manner that the BLE authentication information is associated with the identification information unique to the key unit **12**. Additionally, the vehicle use management unit **322** extracts the use end date on the basis of the reservation information. Then, the vehicle use management unit **322** transmits a signal including the BLE authentication information and the use term information (the use end date of the vehicle **10**) of the BLE authentication information to the specified portable terminal **20** of the user via the communication processing unit **321**.

Periodically, the schedule information acquisition unit **323** (an example of an acquisition unit) is connected to the reservation management server **40** and acquires the schedule information of the vehicle **10**. For example, the schedule information acquisition unit **323** transmits the signal requesting the disclosure of the schedule information of the vehicle **10** via the communication processing unit **321** at predetermined time intervals. Accordingly, the schedule information acquisition unit **323** can acquire the schedule information (reference data) of the vehicle **10** from the reservation management server **40** (schedule information DB **423**) via the communication processing unit **321**.

Identification information, corresponding passwords, and the like, of individual users who use the vehicle **10** registered in advance are stored in the user information DB **324**.

The BLE authentication information associated with the identification information unique to the key unit **12** is stored in the authentication information DB **325**.

The reservation management server **40** manages the schedules of objects (persons, things including vehicles, and facilities) that are registered in advance. In the present embodiment, the reservation management server **40** is a general-purpose schedule management server. For example, a cloud application (an example of a schedule management application that is available via the Web) that is not illustrated is stored in the reservation management server **40**. Then, the user can execute this cloud application at the portable terminal **20** or another terminal via the predetermined communication network, such as the cellular-phone network or the Internet network and thereby can set the schedule information, using this cloud application (creation, updating, and the like).

In addition, the reservation management server **40** may have an aspect in which an organization (self-organization) that performs provision of a program realizing the locking/unlocking request unit **233** and management of the center server **30** manages, or may have an aspect in which an organization (third party) different from the self-organization manages. Additionally, the reservation management server **40** may be an exclusive schedule management server that performs schedule management of the vehicle **10**. Additionally, the schedules of things, facilities, or the like including vehicles represent the use schedules (use reservations) of things, facilities, and the like.

The reservation management server **40** includes a communication device **41** and a schedule management device **42**.

The communication device **41** is an arbitrary device that communicates with the portable terminal **20**, the center server **30**, and the like through the predetermined communication network.

The schedule management device **42** is mainly configured with one or a plurality of computers, and includes a communication processing unit **421** and a schedule management unit **422**, as functional units realized by executing one or more programs on the CPU. Additionally, the schedule management device **42** includes a schedule information DB **423** stored in the internal auxiliary storage, and the schedule information of the vehicle **10** is included in the schedule information DB **423**.

The communication processing unit **421** transmits and receives various signals among the portable terminal **20**, the center server **30**, and the like, using the communication device **41**. For example, the communication processing unit **421** receives the signal requesting the disclosure of the schedule information of the vehicle **10** from the portable terminal **20**, and returns the schedule information (reference data) of the vehicle **10** to the portable terminal **20** according to a request from the schedule management unit **422** corresponding to this signal. Additionally, the communication processing unit **421** receives a signal requesting updating of the schedule information from the portable terminal **20**, and returns a signal showing completion of the updating to the portable terminal **20** according to a request from the schedule management unit **422** corresponding to this signal. Additionally, the communication processing unit **421** receives the signal requesting the disclosure of the schedule information of the vehicle **10** from the center server **30**, and returns the schedule information (reference data) of the vehicle **10** to the center server **30** according to the request from the schedule management unit **422** corresponding to this signal.

The schedule management unit **422** manages the schedules of objects (persons, things including vehicles, facilities, and the like) that are registered in advance, for example, according to various kinds of input using the above-described cloud application by the user. In the present embodiment, the vehicle **10** is registered in advance as a management object of the schedule management unit **422**, and the schedule management unit **422** manages the schedule information of the vehicle **10** stored in the schedule information DB **423**. In a case where the communication processing unit **421** has received the signal requesting the disclosure of the schedule information of the vehicle **10** from the portable terminal **20** (another terminal in a case where the use reservation of the vehicle **10** is performed in the other terminal), the schedule management unit **422** first determines whether or not the current access is a regular access on the basis of identification information, a password, and the like included in this signal. Then, the schedule management unit **422** retrieves the schedule information of the vehicle **10** in a case where the current access is the regular access, and transmits this schedule information from schedule information DB **423** to the portable terminal **20** (or the other terminal) via the communication processing unit **421**. Additionally, in a case where the communication processing unit **421** has received a signal including a request showing that the schedule information of the vehicle **10** is updated from the portable terminal **20** (or the other terminal), the schedule management unit **422** updates the schedule information of the vehicle **10** within the schedule information DB

423, according to the contents (that is, the contents of change including the added reservation information) of this request. Additionally, in a case where the communication processing unit 421 has received the signal requesting the disclosure of the schedule information of the vehicle 10 from the center server 30, the schedule management unit 422 determines whether or not the current access is a regular access on the basis of identification information, a password, and the like included in this signal, similar to the case of the request from the portable terminal 20. Then, the schedule management unit 422 retrieves the schedule information of the vehicle 10 from schedule information DB 423 in a case where the current access is the regular access, and transmits this schedule information to the center server 30 via the communication processing unit 421.

Next, the outline of operation of the locking/unlocking system 1 related to the present embodiment will be described with reference to FIG. 3.

FIG. 3 is a conceptual diagram conceptually illustrating the operation (a flow until locking/unlocking of the doors of the vehicle 10 is performed from the use reservation of the vehicle 10) of the locking/unlocking system 1 related to the present embodiment.

In addition, in FIG. 3, in order to conceptually explain transfer of signals between main components, illustration of hardware (the communication devices 21, 22, 31, 41, and the like) or software (the first communication processing unit 231, the second communication processing unit 232, communication processing unit 321, 421, and the like) that realizes communication functions is omitted.

First, in Step S301, the use reservation unit 234 (for example, a schedule application installed in the portable terminal 20) of the portable terminal 20 performs the use reservation of the vehicle 10 according to a user's operation for the GUI displayed on the display 24.

The use reservation unit 234 uses, for example, the above-described cloud application included in the reservation management server 40 and transmits the signal requesting the disclosure of the schedule information of the vehicle 10 to the reservation management server 40. In this case, the use reservation unit 234 uses an application programming interface (API) 424 that calls up the schedule management unit 422, and performs a request according to the procedure, specification, and the like of the API 424. Accordingly, the schedule management unit 422 is called from the API 424. The schedule management unit 422 retrieves the schedule information (reference data) of the vehicle 10 from the schedule information DB 423, and returns the schedule information of the vehicle 10 to the portable terminal 20, using the API 424.

Additionally, similarly, the use reservation unit 234 transmits the signal requesting updating of the schedule of the vehicle 10 to the reservation management server 40, using the same API 424, in a case where the user makes a new use reservation of the vehicle 10 through the GUI of the display 24. Accordingly, the schedule management unit 422 is called from the API 424. The schedule management unit 422 updates the schedule information of the vehicle 10 in the schedule information DB 423 into contents including the reservation information regarding the new use reservation, and completes the new use reservation of the vehicle 10 by the user of the portable terminal 20. Then, the schedule management unit 422 returns a signal showing the completion of the updating to the portable terminal 20, using the API 424.

Subsequently, in Step S302, the schedule information acquisition unit 323 of the center server 30 periodically acquires the schedule information of the vehicle 10 updated into the contents including the new use reservation by the user of the portable terminal 20, at a timing when being connected to the reservation management server 40.

The schedule information acquisition unit 323 transmits the signal requesting the disclosure of the schedule information of the vehicle 10 to the reservation management server 40, using the API 424. Accordingly, the schedule management unit 422 is called from the API 424. The schedule management unit 422 retrieves the schedule information of the vehicle 10 from the schedule information DB 423, and reservation management server 40 returns the schedule information (reference data) of the vehicle 10 to the center server 30. In this case, the reservation management server 40 uses the API 326 that calls the schedule information acquisition unit 323. Accordingly, the schedule information acquisition unit 323 is called from the API 326, and the schedule information acquisition unit 323 can acquire the schedule information (reference data) of the vehicle 10.

Subsequently, in Step S303, the vehicle use management unit 322 of the center server 30 checks the schedule information of the vehicle 10 acquired by the schedule information acquisition unit 323. Accordingly, the vehicle use management unit 322 can grasp that the new reservation information by the user of the portable terminal 20 is included in the schedule information of the vehicle 10.

Subsequently, in Step S304, the center server 30 (vehicle use management unit 322) transmits the BLE authentication information corresponding to the key unit 12 arranged inside the vehicle 10 to the portable terminal 20. As described above, the BLE authentication information received by the portable terminal 20 is stored in the storage unit 236 of the portable terminal 20.

Subsequently, in Step S305, the locking/unlocking request unit 233 (for example, a locking/unlocking application installed in the portable terminal 20) transmits the locking request and the unlocking request including the BLE authentication information to the key unit 12, according to the user's operation for the GUI displayed on the display 24. Accordingly, as described above, the locking/unlocking of the vehicle 10 can be performed by operating the locking/unlocking device 11 via the key unit 12.

Next, a specific example of the operation of the locking/unlocking system 1 related to the present embodiment will be described with reference to FIG. 4.

FIG. 4 is a sequence diagram illustrating an example of the operation of the locking/unlocking system 1 related to the present embodiment.

First, Steps S402 to S410 represent a series of operation until the BLE certification information is transmitted to the portable terminal 20 from the use reservation of the vehicle 10.

In Step S402, the use reservation unit 234 of the portable terminal 20 performs the use reservation of the vehicle 10 according to the input from the user in the GUI displayed on the display 24. Accordingly, as described above, the schedule information of the vehicle 10 stored in the schedule information DB 423 of the reservation management server 40 is updated, and the new use reservation is added to the schedule information of the vehicle 10.

In Step S404, the schedule information acquisition unit 323 of the center server 30 transmits the signal requesting the disclosure of the schedule information of the vehicle 10 to the reservation management server 40, at a predetermined timing after the processing of Step S402, via the communication processing unit 321.

In Step S**406**, the schedule management unit **422** of the reservation management server **40** returns the schedule information (reference data) of the vehicle **10** via the communication processing unit **421**.

In Step S**408**, the vehicle use management unit **322** of the center server **30** checks the schedule information of the vehicle **10** acquired by the schedule information acquisition unit **323**. Then, the vehicle use management unit **322** grasps that the new use reservation corresponding to the processing of Step S**402** is added to the schedule information of the vehicle **10**.

In Step S**410**, the vehicle use management unit **322** of the center server **30** transmits the BLE authentication information corresponding to the key unit **12** arranged inside the vehicle **10** to the portable terminal **20** through the communication processing unit **321**. Accordingly, the portable terminal **20** can acquire the BLE authentication information.

In addition, the vehicle use management unit **322** may transmit the BLE authentication information to the portable terminal **20** immediately before (for example, 10 minutes before) the use start date of the vehicle **10**. Accordingly, a situation where, before of the use start date of the vehicle **10**, the user unlocks the vehicle **10** and the vehicle **10** is used can be suppressed.

Subsequently, Steps S**412** to S**422** represent a series of operation at the start of use of the vehicle **10**.

In Step S**412**, the locking/unlocking request unit **233** of the portable terminal **20** transmits the signal requesting the use permission of the vehicle **10** to the center server **30** via the second communication processing unit **232**, according to the user's predetermined operation for the GUI displayed on the display **24**.

In Step S**414**, the vehicle use management unit **322** of the center server **30** transmits the use permission signal to the portable terminal **20** via the communication processing unit **321**. Accordingly, the locking/unlocking request unit **233** of the portable terminal **20** receives the use permission signal via the second communication processing unit **232**.

In addition, a flow may be adopted in which the BLE authentication information received by the portable terminal **20** is encrypted according to the processing of Step S**410** and decrypted, using the use permission signal received by the portable terminal **20**, according to the processing of Step S**414**. Accordingly, a situation where, before of the use start date of the vehicle **10**, the user unlocks the vehicle **10** and the vehicle **10** is available can be suppressed.

In Step S**416**, the locking/unlocking request unit **233** of the portable terminal **20** transmits the unlocking request including the BLE authentication information to the key unit **12** according to the user's predetermined operation for the GUI displayed on the display **24**. Accordingly, the communication processing unit **1243** of the key unit **12** receives the unlocking request.

In Step S**418**, the authentication processing unit **1244** of the key unit **12** performs authentication on the basis of the BLE authentication information included in the unlocking request, and turns on the power source of the key unit **12** if the authentication is successful.

In Step S**420**, the authentication processing unit **1244** of the key unit **12** sends the transmission request to the RF sending processing unit **1242**, and the RF sending processing unit **1242** transmits the unlock signal including the key information after restoration to the locking/unlocking device **11** according to this transmission request. Accordingly, the RF reception processing unit **1132** of the locking/unlocking device **11** receives the unlock signal.

In Step S**422**, the authentication processing unit **1133** of the locking/unlocking device **11** performs authentication on the basis of the key information included in the unlock signal. In a case where the authentication is successful, the locking/unlocking control unit **1134** drives the door locking motor **115** to unlock the doors of the vehicle **10** via the body ECU **114**. Accordingly, the user of the portable terminal **20** can get on the vehicle **10** to use the vehicle **10**.

Subsequently, Steps S**424** to S**438** represent a series of operation at the end of use of the vehicle **10**.

In Step S**424**, the locking/unlocking request unit **233** of the portable terminal **20** transmits the locking request including the BLE authentication information to the key unit **12** according to the user's predetermined operation for the GUI displayed on the display **24**. Accordingly, the communication processing unit **1243** of the key unit **12** receives the locking request.

In Step S**426**, the authentication processing unit **1244** of the key unit **12** performs authentication on the basis of the BLE authentication information included in the locking request.

Then, if this authentication is successful, in Step S**428**, the authentication processing unit **1244** of the key unit **12** sends the transmission request to the RF sending processing unit **1242**, and the RF sending processing unit **1242** transmits the locking signal including the key information after restoration to the locking/unlocking device **11** according to this transmission request. Accordingly, the RF reception processing unit **1132** of the locking/unlocking device **11** receives the lock signal.

In Step S**430**, the authentication processing unit **1133** of the locking/unlocking device **11** performs authentication on the basis of the key information included in the lock signal. In a case where the authentication is successful, the locking/unlocking control unit **1134** drives the door locking motor **115** to lock the doors of the vehicle **10** via the body ECU **114**.

On the other hand, if the authentication processing unit **1244** of the key unit **12** transmits the lock signal to the locking/unlocking device **11** via the RF sending processing unit **1242**, the transmission request is sent to the communication processing unit **1243** in Step S**432**, and the communication processing unit **1243** transmits the locking notification to the portable terminal **20**.

Then, the authentication processing unit **1244** of the key unit **12** turns off the power source of the key unit **12** in Step S**434** if the locking notification is transmitted to the portable terminal **20** via the communication processing unit **1243**.

In Step S**436**, the authentication information erasing unit **235** of the portable terminal **20** erases the BLE authentication information within the storage unit **236** if the use end date has elapsed.

In Step S**438**, the authentication information erasing unit **235** of the portable terminal **20** sends a transmission request to the second communication processing unit **232**, and the second communication processing unit **232** transmits notification of the end of use to the center server **30** according to this transmission request.

In this way, in the present embodiment, the portable terminal **20** transmits the locking request (or the unlocking request) including the BLE authentication information matched with the key unit **12** to the key unit **12** arranged within the vehicle compartment of the vehicle **10**. Additionally, the key unit **12** transmits the lock signal (or the unlock signal) including the key information matched with the vehicle **10** to the locking/unlocking device **11** in a case where the authentication based on the BLE authentication

information included in the received locking request (or the unlocking request) is successful. Then, the locking/unlocking device **11** performs locking (or unlocking) of the vehicle **10**, in a case where the authentication based on the key information included in the received lock signal (or unlock signal) is successful. Therefore, since the user can perform the locking/unlocking of the vehicle **10** by acquiring the BLE authentication information in advance, for example, using the portable terminal **20** owned by the user him/herself, effort for transfer of an electronic key, or the like, can be saved, and user convenience can be improved.

Additionally, in the present embodiment, the key information matched with the vehicle **10** within the key unit **12**, that is, the key information unique to the vehicle **10**, is normally in the encrypted state or the inaccessible state. For that reason, even if a malicious third party gets only the key unit **12** unlawfully, it is difficult to use the key unit for the locking/unlocking of the vehicle **10**, and a vehicle theft or the like can be suppressed. Additionally, the BLE authentication information transmitted from the portable terminal **20** to the key unit **12** is matched with the key unit **12** and is not matched with the vehicle. For that reason, even if the BLE authentication information leaks from the center server **30** to the outside, it is necessary to further specify a correspondence relationship between the key unit **12** and the vehicle **10** (which key unit **12** is disposed in a certain vehicle **10**), in addition to a correspondence relationship between the BLE authentication information and the key unit **12**, and a vehicle theft or the like can be suppressed.

Additionally, in the present embodiment, the locking/unlocking device **11** among the components included in the vehicle **10** is the existing component, and the locking/unlocking of the vehicle **10** can be performed from the portable terminal **20** simply by arranging the key unit **12** within the vehicle compartment of the vehicle **10**. That is, the locking/unlocking of the vehicle **10** can be performed using the portable terminal **20** that has received the authentication from the center server **30** simply by adding the key unit **12**, without remodeling the vehicle or performing a design change of the vehicle. For that reason, the initial investment when starting service, such as car sharing, can be suppressed.

Additionally, in the present embodiment, the center server **30** (vehicle use management unit **322**) transmits the BLE authentication information to the portable terminal **20** of the user who has reserved the vehicle, on the basis of the schedule information of the vehicle acquired by the schedule information acquisition unit **323**. For that reason, if the user makes a use reservation of the vehicle **10**, it is not necessary to perform the operation for acquiring the BLE authentication information, and user convenience can be improved.

Additionally, in the present embodiment, the schedule information acquired by the center server **30** (schedule information acquisition unit **323**) is executed by the reservation management server **40**, and is set from the portable terminal **20** or another terminal, using the cloud application that is available via the Web. For that reason, since the user of the portable terminal **20** can automatically acquire the BLE authentication information simply by writing the schedule information of the vehicle using a Web application from the portable terminal **20** or another terminal, user convenience can be improved.

Additionally, in the present embodiment, a general-purpose schedule management server managed by a third party may be used as the reservation management server **40**. Accordingly, for example, it is not necessary to provide an exclusive reservation control function, and the initial investment when starting service, such as car sharing, can be suppressed. Additionally, in companies or the like, schedules of personnel, equipment, and the like may be managed by schedule management application (cloud application) associated with the general-purpose schedule management server provided by the third party. For that reason, the locking/unlocking system **1** related to the present embodiment can be more easily introduced into the companies or the like by managing the schedule information of company cars, using the same general-purpose schedule management server.

Although the embodiment has been described above in detail, the disclosure is not limited to this specific embodiment, and various alterations and changes can be made.

For example, in the above-described embodiment, the locking request and unlocking request that are transmitted from the portable terminal **20** to the vehicle **10** are transmitted to the key unit **12**. However, an aspect in which the locking request and unlocking request are directly transmitted to the locking/unlocking device **11** may be adopted. That is, a configuration may be adopted in which the portable terminal **20** receives the key information from the center server **30** instead of the BLE authentication information, an unlocking request or a locking request including the key information is transmitted to the locking/unlocking device **11**, and the locking/unlocking device **11** performs authentication to perform locking or unlocking of the vehicle **10**, according to the unlocking request or locking request.

Additionally, in the above-described embodiment, the object of the locking/unlocking and the use reservation is the vehicle. However, the object is not limited to the vehicle so long as the object is available in different time zones by a plurality of users and is capable of being locked and unlocked. That is, the vehicle that is the object of the locking/unlocking and the use reservation in the above-described embodiment may be replaced with, for example, facilities, such as conference rooms, resorts, and gymnasiums, which are capable of being locked and unlocked. Accordingly, the convenience of a user using the facilities can be improved similar to the above-described embodiment.

What is claimed is:

1. A locking and unlocking system of a vehicle comprising:

a portable terminal communicable with the vehicle; and

a server communicable with the portable terminal, wherein

the portable terminal includes

a communication device configured to receive authentication information from the server, the authentication information being used for locking and unlocking of the vehicle, and

a transmitter configured to transmit a first signal, the first signal requesting the locking or the unlocking to a key unit provided in the vehicle, the first signal including the authentication information, and the authentication information being uniquely matched with the key unit and not matched with the vehicle, and

the server includes

a computer including a processor for executing one or more programs stored in memory of the computer, the computer configured to acquire schedule information from another reservation management server configured to perform schedule management, the schedule information including a date at which the vehicle is reserved so that the

vehicle is used, the schedule information including first identification information of a user who has reserved the vehicle, and

a second transmitter configured to transmit the authentication information to the portable terminal of the user, based on the schedule information acquired by the computer, and

the vehicle includes

the key unit located inside of the vehicle and configured to receive the first signal requesting the locking or the unlocking of the vehicle transmitted from the portable terminal, and

a locking/unlocking device including a body electronic control, the body electronic control unit configured to perform operation control of a door locking motor that performs locking or unlocking of the vehicle, and wherein,

in response to the first signal, the key unit is further configured to transmit a second signal to the locking/unlocking device, the second signal including a key information, and the key information being matched to the vehicle,

the door locking motor performs locking or unlocking of the vehicle according to the second signal transmitted from the key unit,

the server includes a user information database where a second identification information of the user is registered in advance, and

the computer is configured to

specify the user and the portable terminal of the user, by collating the first identification information with the second identification information,

transmit the authentication information to the portable terminal by extracting an end date at which the user will stop using the vehicle from the schedule information.

2. The locking and unlocking system according to claim **1**, wherein the schedule information is set from the portable terminal or another terminal, the other terminal being accessible to a schedule management application program, by using the schedule management application program, the schedule management application program being executed by the other server, the schedule management application program being available through the Web.

* * * * *