US010449918B2

(12) **United States Patent**
Rai

(10) **Patent No.: US 10,449,918 B2**
(45) **Date of Patent: *Oct. 22, 2019**

(54) **USER PROFILE SYNCHRONIZATION FOR A VEHICLE**

(71) Applicant: **TOYOTA INFOTECHNOLOGY CENTER USA, INC.**, Mountain View, CA (US)

(72) Inventor: **Vinuth Rai**, San Jose, CA (US)

(*) Notice: Subject to any disclaimer, the term of this patent is extended or adjusted under 35 U.S.C. 154(b) by 0 days.

This patent is subject to a terminal disclaimer.

(21) Appl. No.: **16/231,910**

(22) Filed: **Dec. 24, 2018**

(65) **Prior Publication Data**

US 2019/0126867 A1 May 2, 2019

Related U.S. Application Data

(63) Continuation of application No. 15/361,274, filed on Nov. 25, 2016, now Pat. No. 10,196,021, which is a (Continued)

(51) **Int. Cl.**

B60R 16/037	(2006.01)
B60W 50/00	(2006.01)
B60W 40/09	(2012.01)
G06Q 30/06	(2012.01)
H04L 29/08	(2006.01)
B60W 10/08	(2006.01)

(Continued)

(52) **U.S. Cl.**

CPC ***B60R 16/037*** (2013.01); ***B60W 10/08*** (2013.01); ***B60W 10/30*** (2013.01); ***B60W 40/08*** (2013.01); ***B60W 40/09*** (2013.01); ***B60W 50/0098*** (2013.01); ***B60W 50/085*** (2013.01); ***G06Q 30/0645*** (2013.01); ***H04L 67/1095*** (2013.01); ***H04L 67/12*** (2013.01); ***H04L 67/306*** (2013.01); *B60W 2050/0064* (2013.01); *B60W 2540/28* (2013.01); *B60W 2550/40* (2013.01); *B60W 2710/08* (2013.01); *B60W 2710/30* (2013.01); *B60W 2720/00* (2013.01)

(58) **Field of Classification Search**

None

See application file for complete search history.

(56) **References Cited**

U.S. PATENT DOCUMENTS

5,940,072	A	8/1999	Jahanghir et al.
8,538,408	B2	9/2013	Howarter et al.

(Continued)

Primary Examiner — Richard M Camby

(74) *Attorney, Agent, or Firm* — Burbage Law, P.C.; Jon-Michael Burbage; Elizabeth Ruzich

(57) **ABSTRACT**

The disclosure includes a system and method for reconfiguring a vehicle based on one or more preferences of a first user without the first user directly providing an input to the vehicle to reconfigure the vehicle. The method may include wirelessly receiving first user profile data at a vehicle. The first user profile data may be associated with a first user. The first user profile data may describe how one or more settings of the vehicle should be configured for the first user. Upon receipt of the first user profile data, the vehicle may be configured in accordance with second user profile data describing how the one or more settings of the vehicle should be configured for a second user. The method may include reconfiguring the one or more settings of the vehicle based on the first user profile data so that the vehicle is reconfigured for the first user.

20 Claims, 19 Drawing Sheets

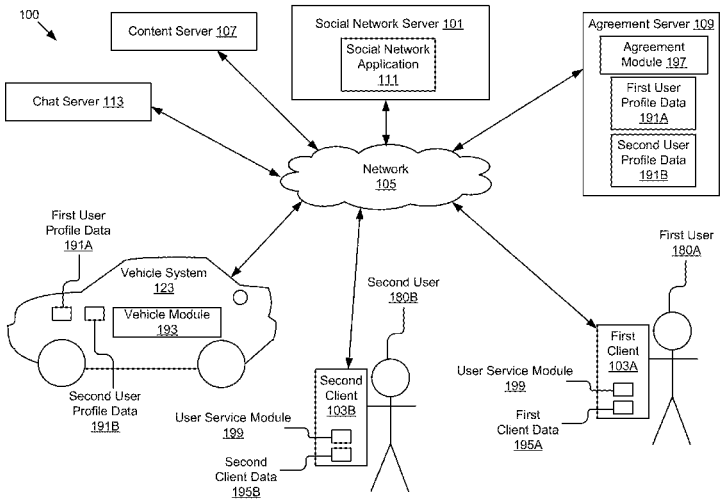

Related U.S. Application Data

continuation of application No. 14/570,541, filed on Dec. 15, 2014, now Pat. No. 9,533,640.

(51) **Int. Cl.**

B60W 10/30	(2006.01)
B60W 40/08	(2012.01)
B60W 50/08	(2012.01)

(56) **References Cited**

U.S. PATENT DOCUMENTS

2013/0066688	A1*	3/2013	Pinkus	G06Q 10/06 705/7.41
2013/0099892	A1	4/2013	Tucker et al.	
2014/0222298	A1*	8/2014	Gurin	G06F 17/00 701/49
2014/0310031	A1*	10/2014	Ricci	B60Q 1/00 705/5
2015/0298689	A1	10/2015	Schwartz et al.	

* cited by examiner

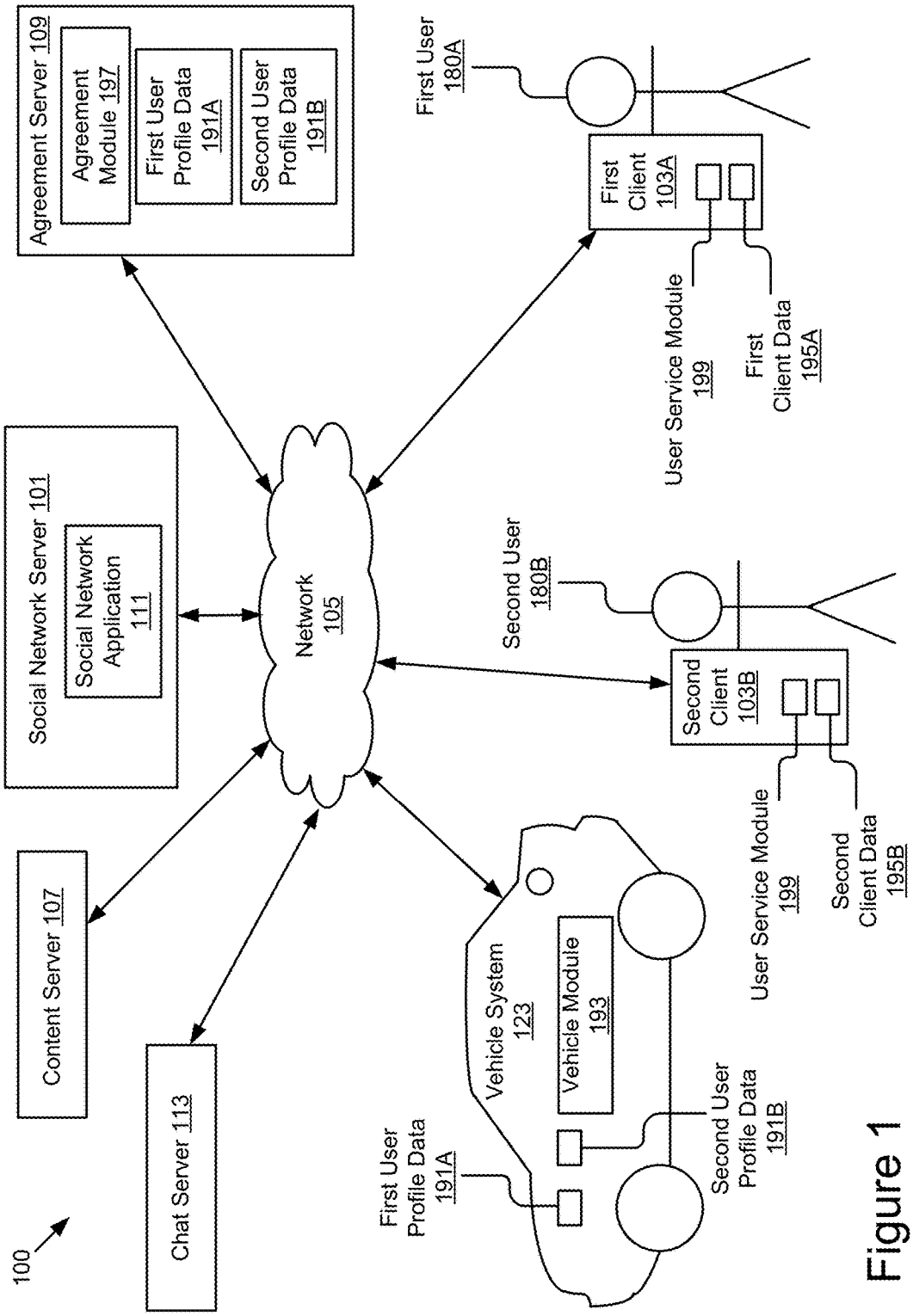
100
Agreement Server 109
Agreement Module 197
First User Profile Data 191A
Second User Profile Data 191B
Social Network Server 101
Social Network Application 111
Content Server 107
Chat Server 113
Network 105
First User 180A
First Client 103A
User Service Module 199
First Client Data 195A
Second User 180B
Second Client 103B
User Service Module 199
Second Client Data 195B
Vehicle System 123
Vehicle Module 193
First User Profile Data 191A
Second User Profile Data 191B

Figure 1

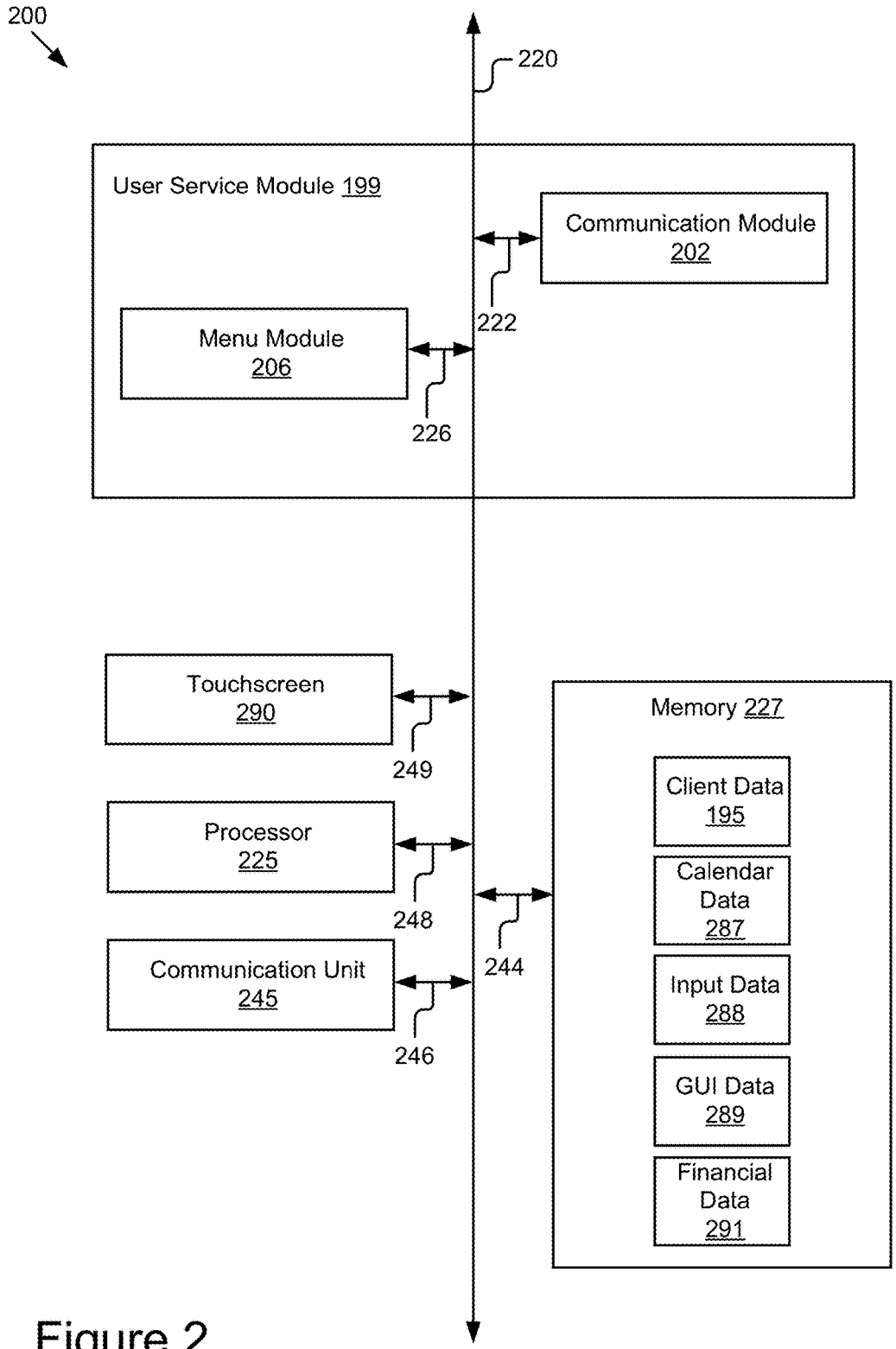
200
220
User Service Module 199
Communication Module 202
222
Menu Module 206
226
Touchscreen 290
249
Processor 225
248
Communication Unit 245
246
244
Memory 227
Client Data 195
Calendar Data 287
Input Data 288
GUI Data 289
Financial Data 291

Figure 2

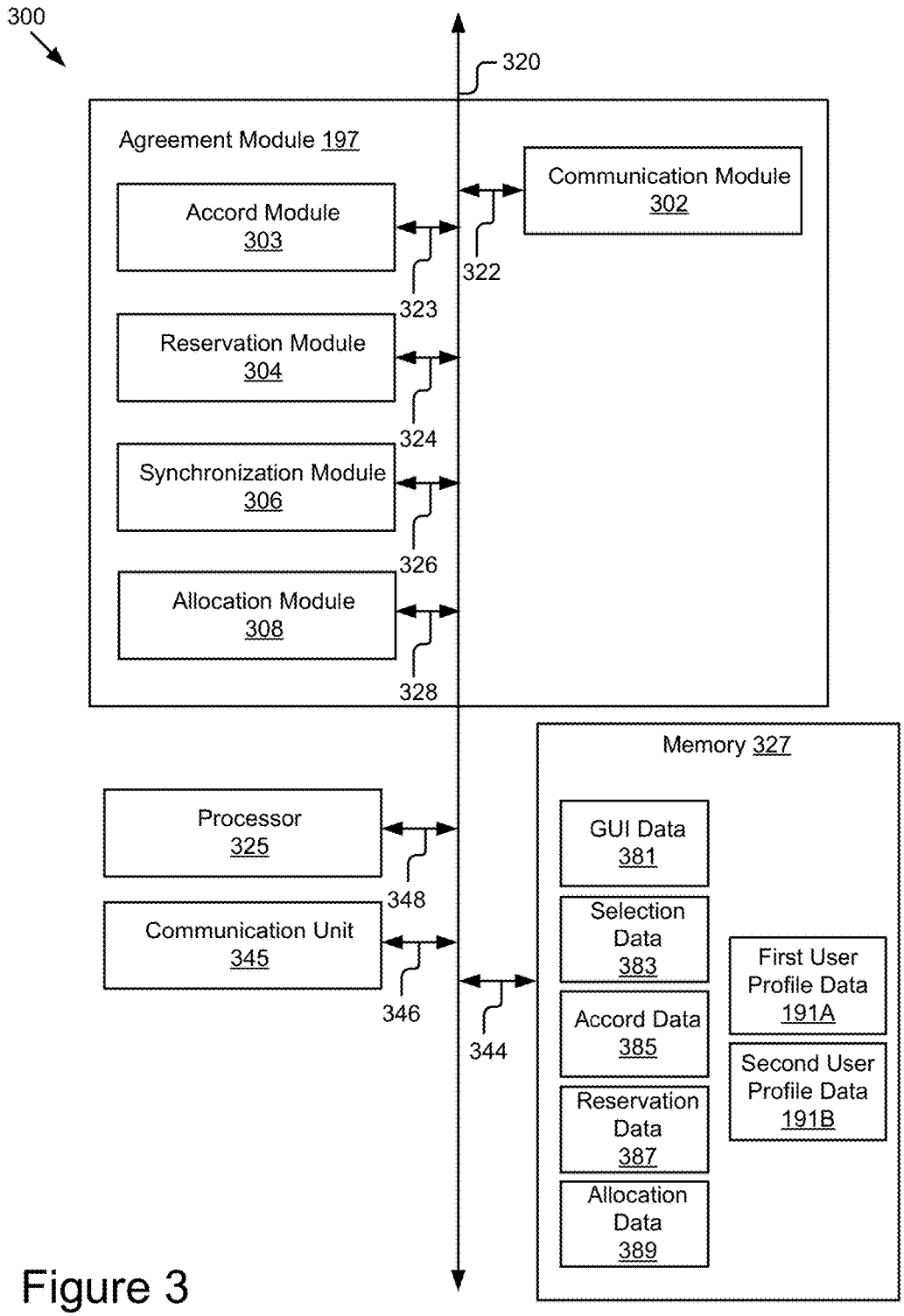
300
320
Agreement Module 197
Communication Module 302
Accord Module 303
322
323
Reservation Module 304
324
Synchronization Module 306
326
Allocation Module 308
328
Memory 327
Processor 325
348
GUI Data 381
Selection Data 383
Communication Unit 345
346
344
Accord Data 385
Reservation Data 387
Allocation Data 389
First User Profile Data 191A
Second User Profile Data 191B

Figure 3

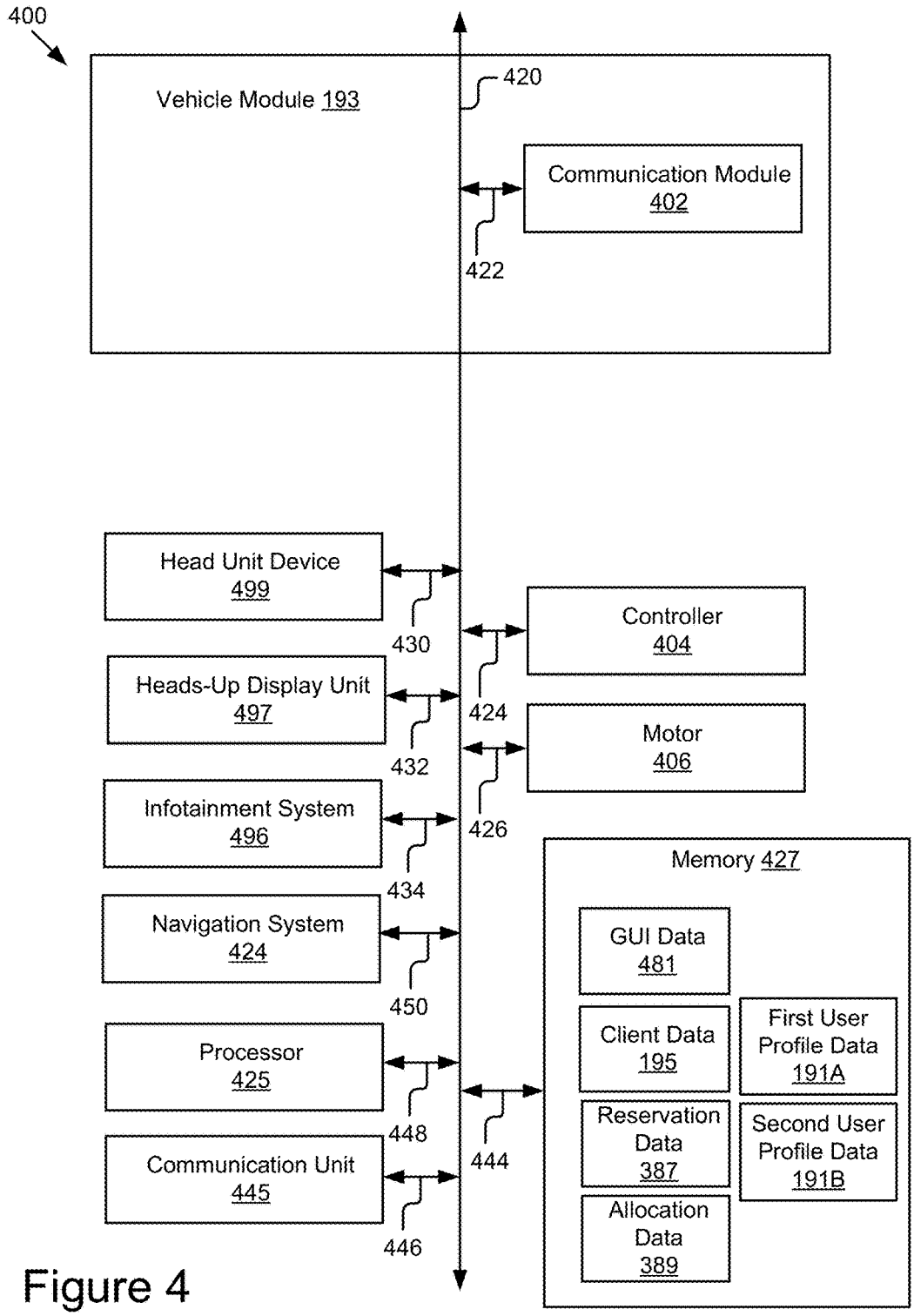
400
Vehicle Module 193
420
Communication Module 402
422
Head Unit Device 499
430
Controller 404
424
Heads-Up Display Unit 497
432
Motor 406
426
Infotainment System 496
434
Memory 427
GUI Data 481
Navigation System 424
450
Client Data 195
First User Profile Data 191A
Processor 425
448
Reservation Data 387
Second User Profile Data 191B
444
Communication Unit 445
446
Allocation Data 389

Figure 4

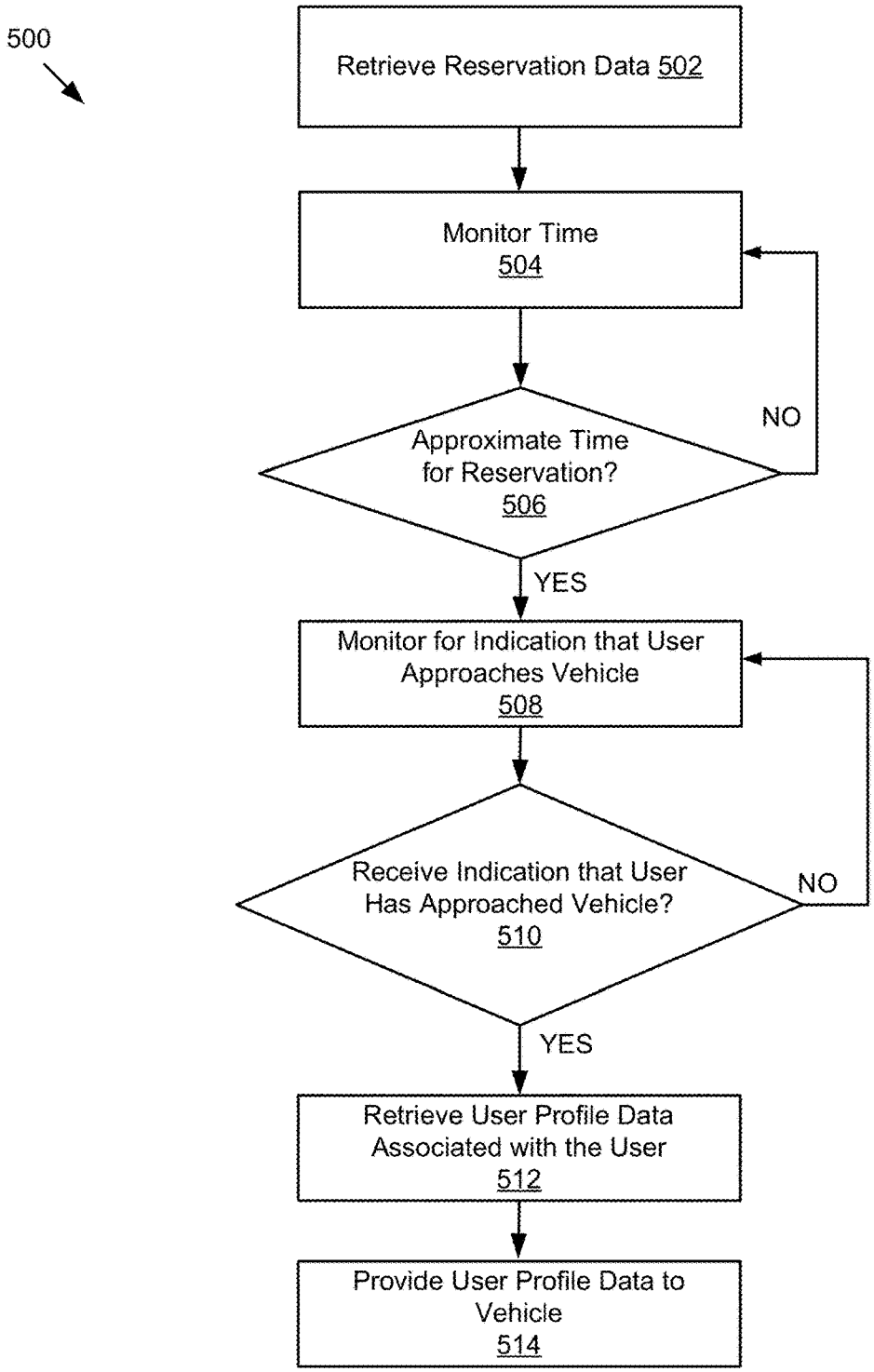
500
Retrieve Reservation Data 502
Monitor Time
504
Approximate Time
for Reservation?
506
NO
YES
Monitor for Indication that User
Approaches Vehicle
508
Receive Indication that User
Has Approached Vehicle?
510
NO
YES
Retrieve User Profile Data
Associated with the User
512
Provide User Profile Data to
Vehicle
514

Figure 5

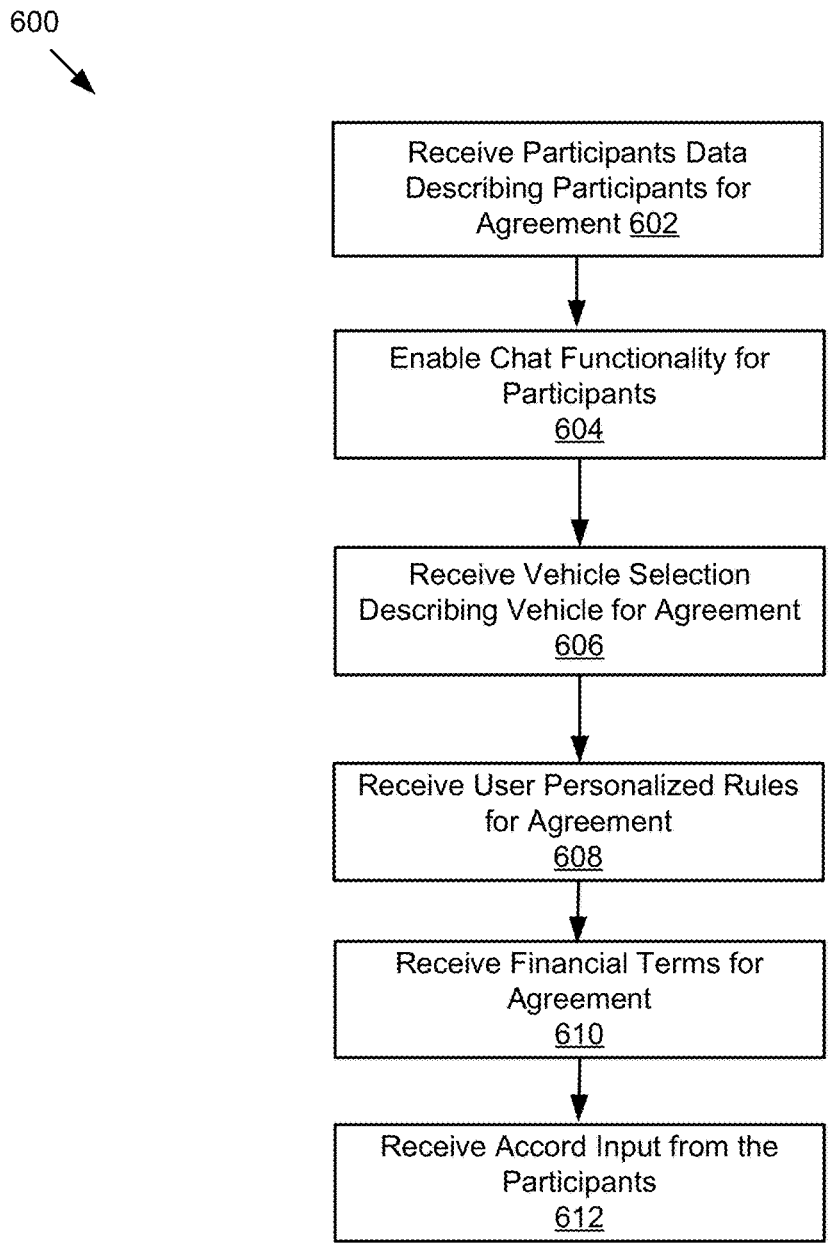
600
Receive Participants Data Describing Participants for Agreement 602
Enable Chat Functionality for Participants 604
Receive Vehicle Selection Describing Vehicle for Agreement 606
Receive User Personalized Rules for Agreement 608
Receive Financial Terms for Agreement 610
Receive Accord Input from the Participants 612

Figure 6

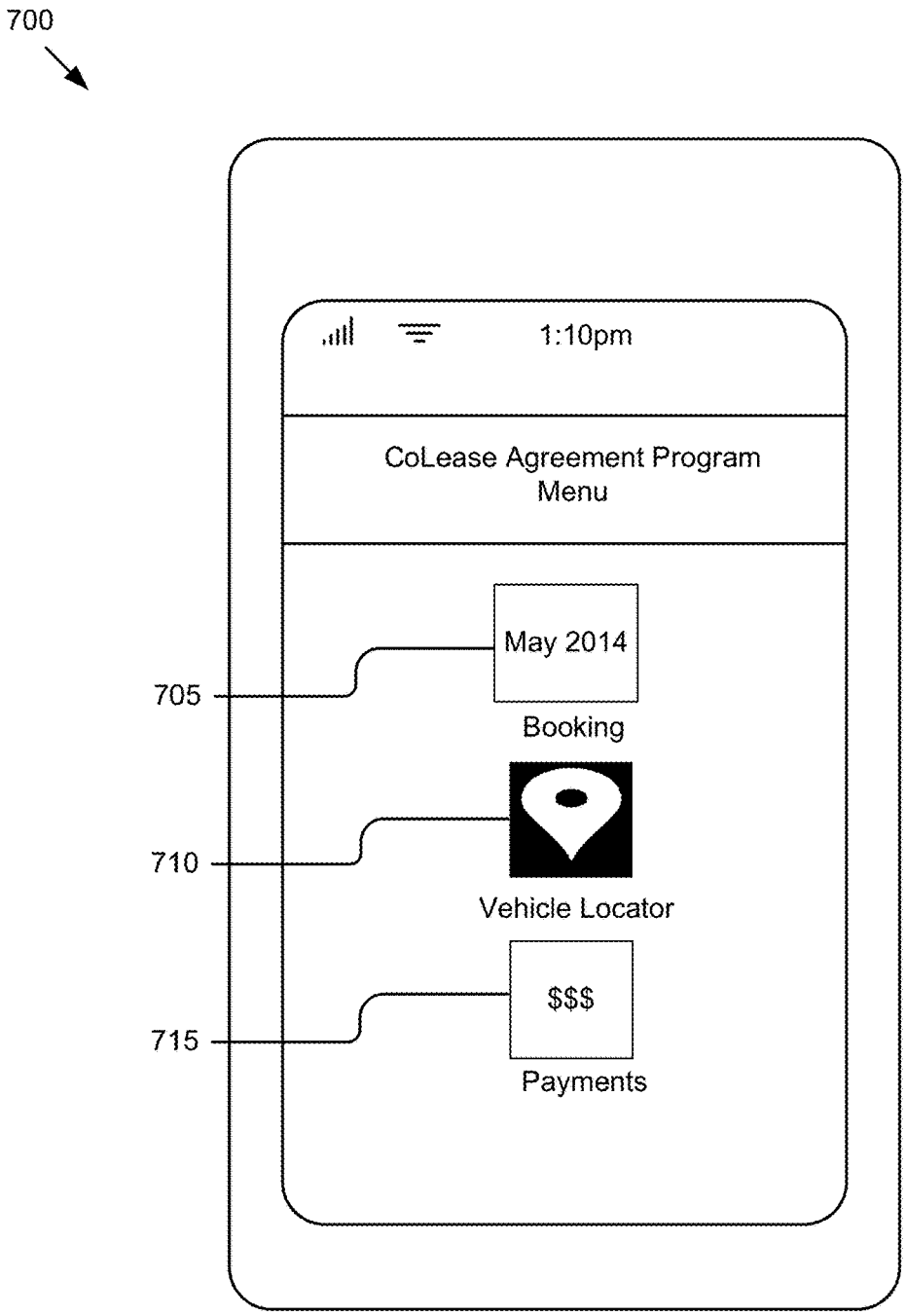
700
1:10pm
CoLease Agreement Program
Menu
May 2014
Booking
705
710
Vehicle Locator
$$$
Payments
715

Figure 7

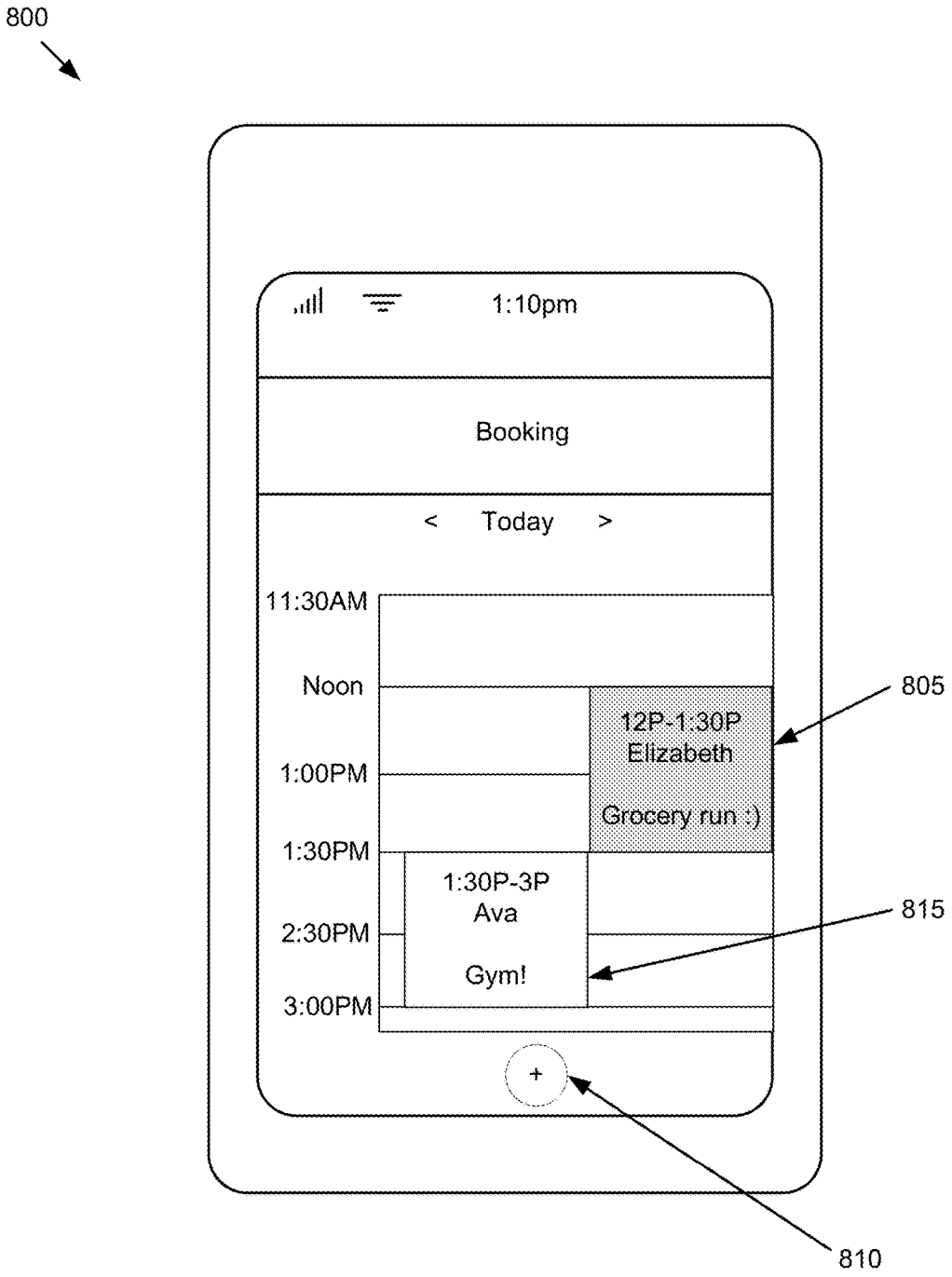
800
1:10pm
Booking
< Today >
11:30AM
Noon
1:00PM
1:30PM
2:30PM
3:00PM
12P-1:30P
Elizabeth
Grocery run :)
1:30P-3P
Ava
Gym!
+
805
815
810

Figure 8

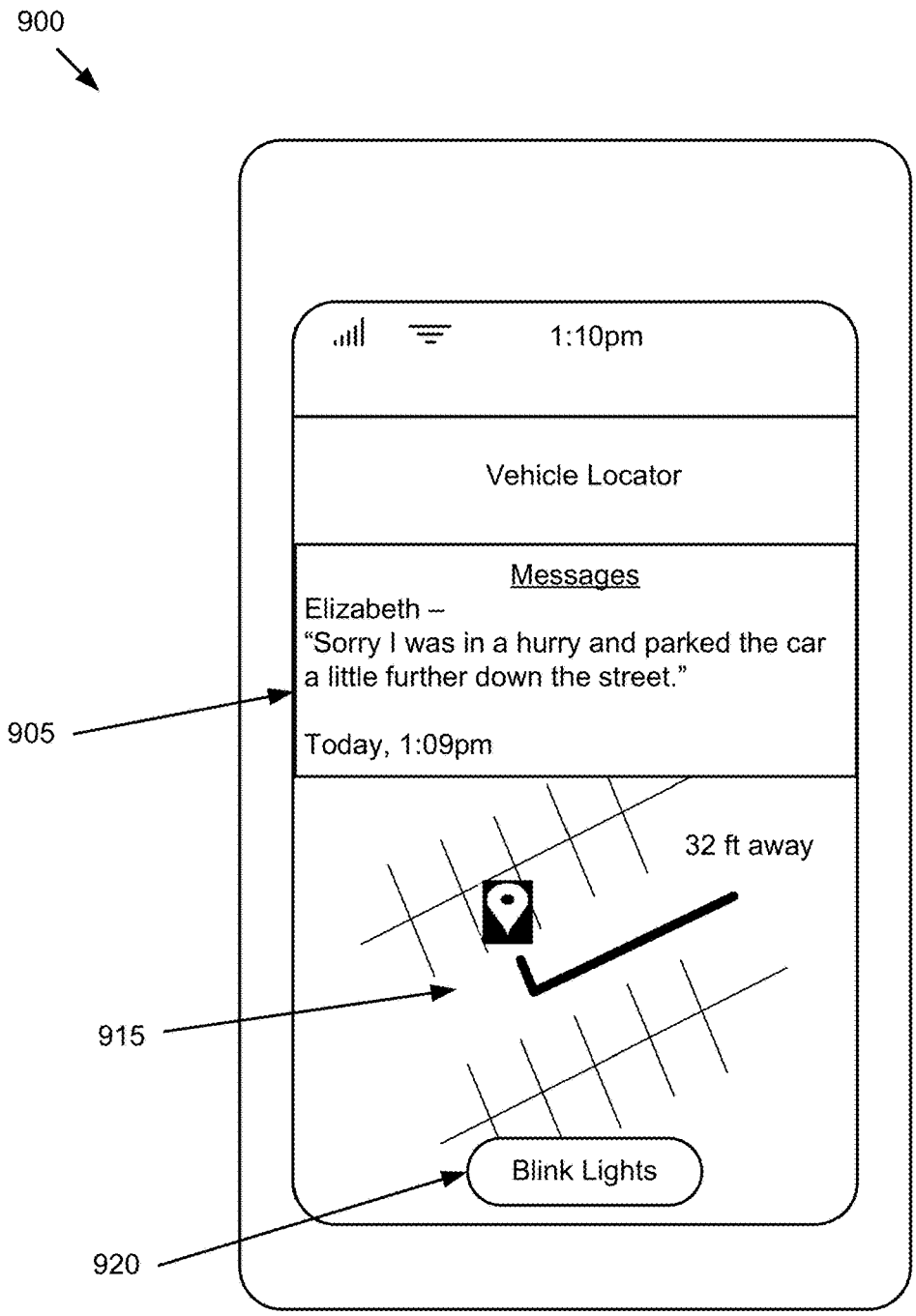
900
1:10pm
Vehicle Locator
Messages
Elizabeth –
"Sorry I was in a hurry and parked the car a little further down the street."
Today, 1:09pm
905
32 ft away
915
Blink Lights
920

Figure 9A

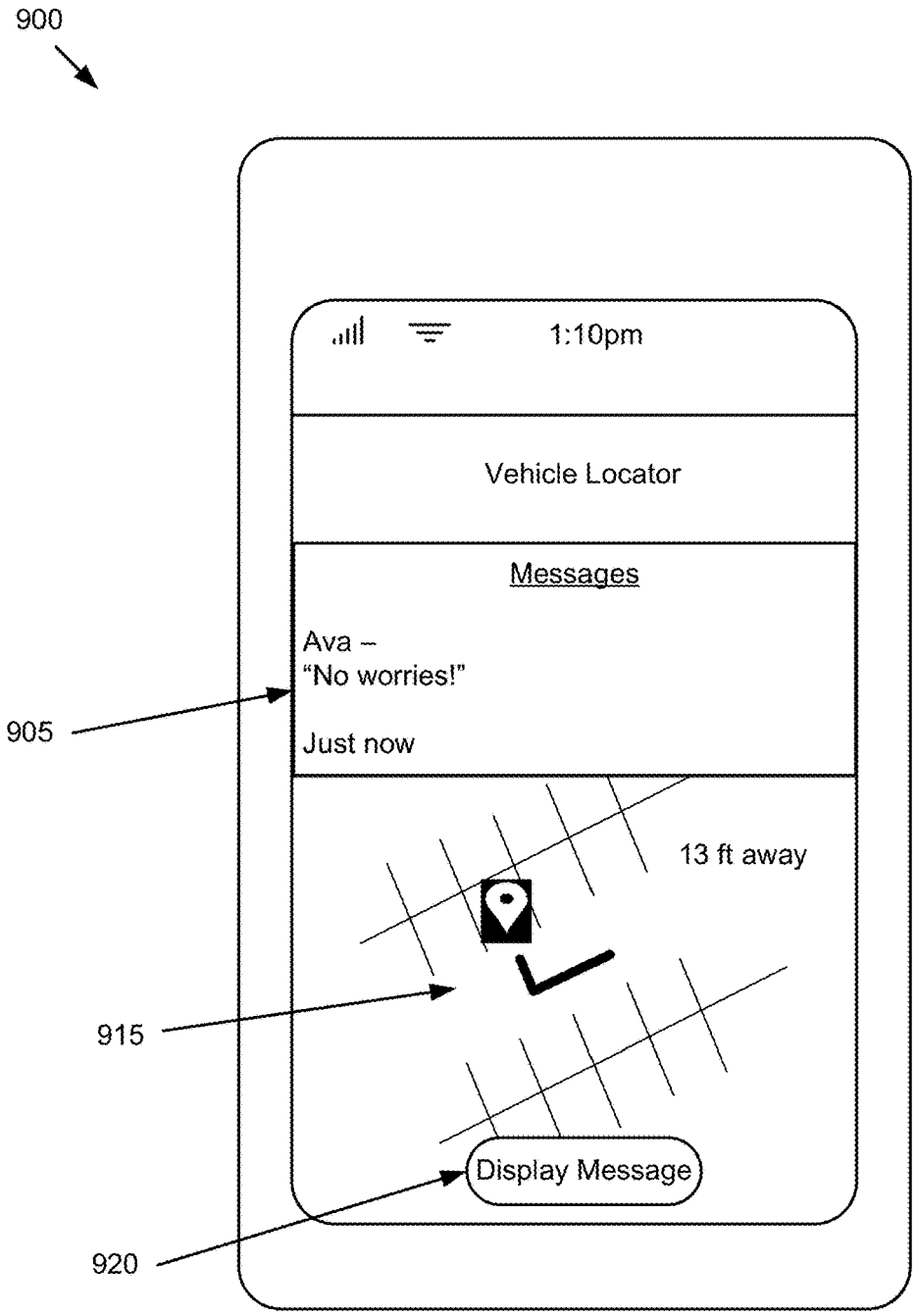
900
1:10pm
Vehicle Locator
Messages
Ava –
"No worries!"
Just now
905
13 ft away
915
Display Message
920

Figure 9B

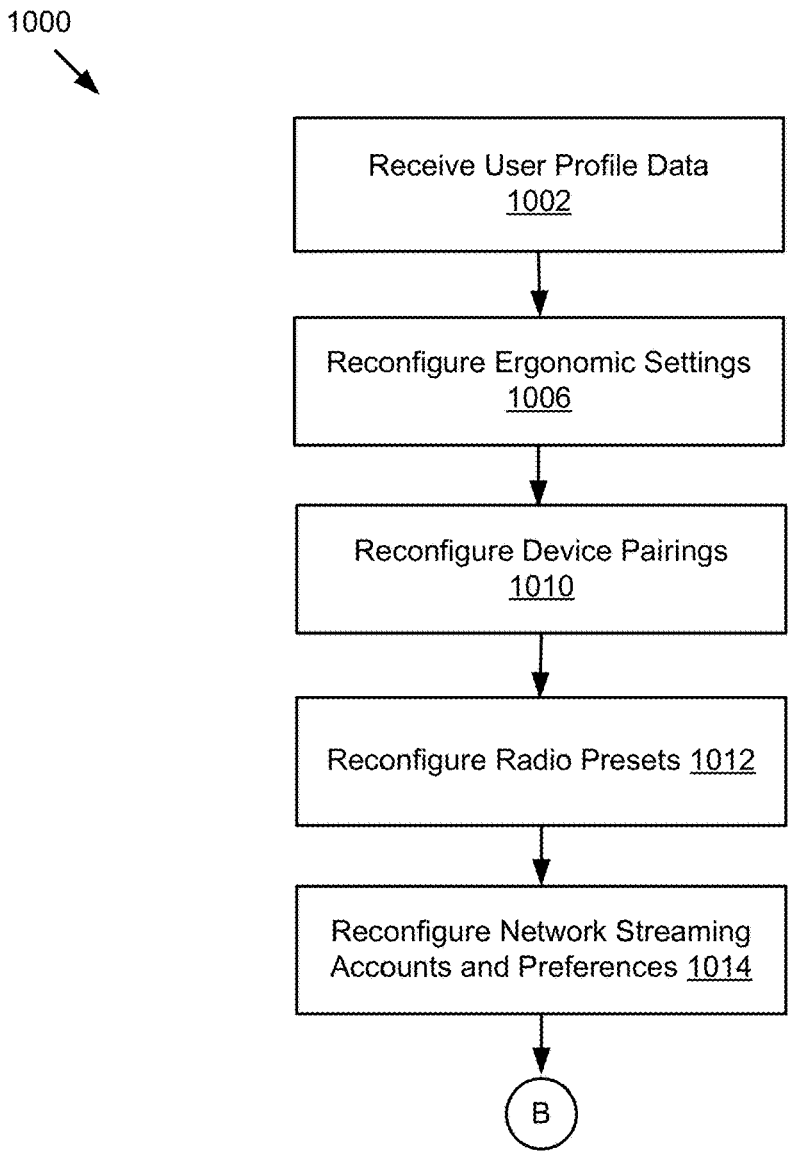
1000
Receive User Profile Data 1002
Reconfigure Ergonomic Settings 1006
Reconfigure Device Pairings 1010
Reconfigure Radio Presets 1012
Reconfigure Network Streaming Accounts and Preferences 1014
B

Figure 10A

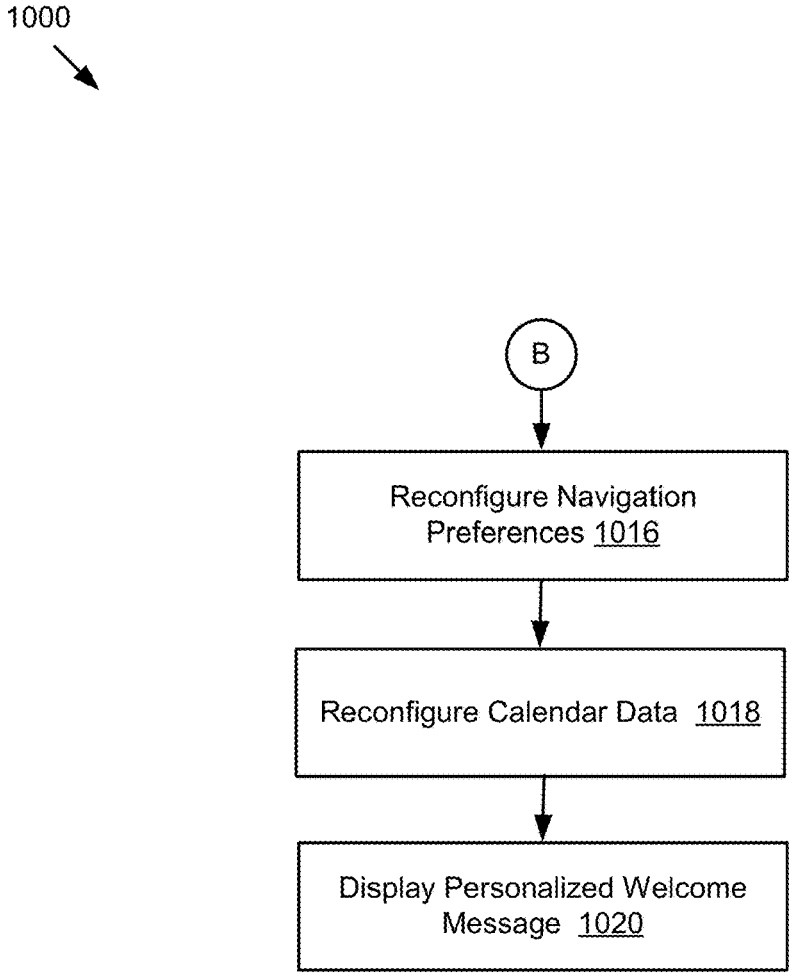
1000
B
Reconfigure Navigation Preferences 1016
Reconfigure Calendar Data 1018
Display Personalized Welcome Message 1020

Figure 10B

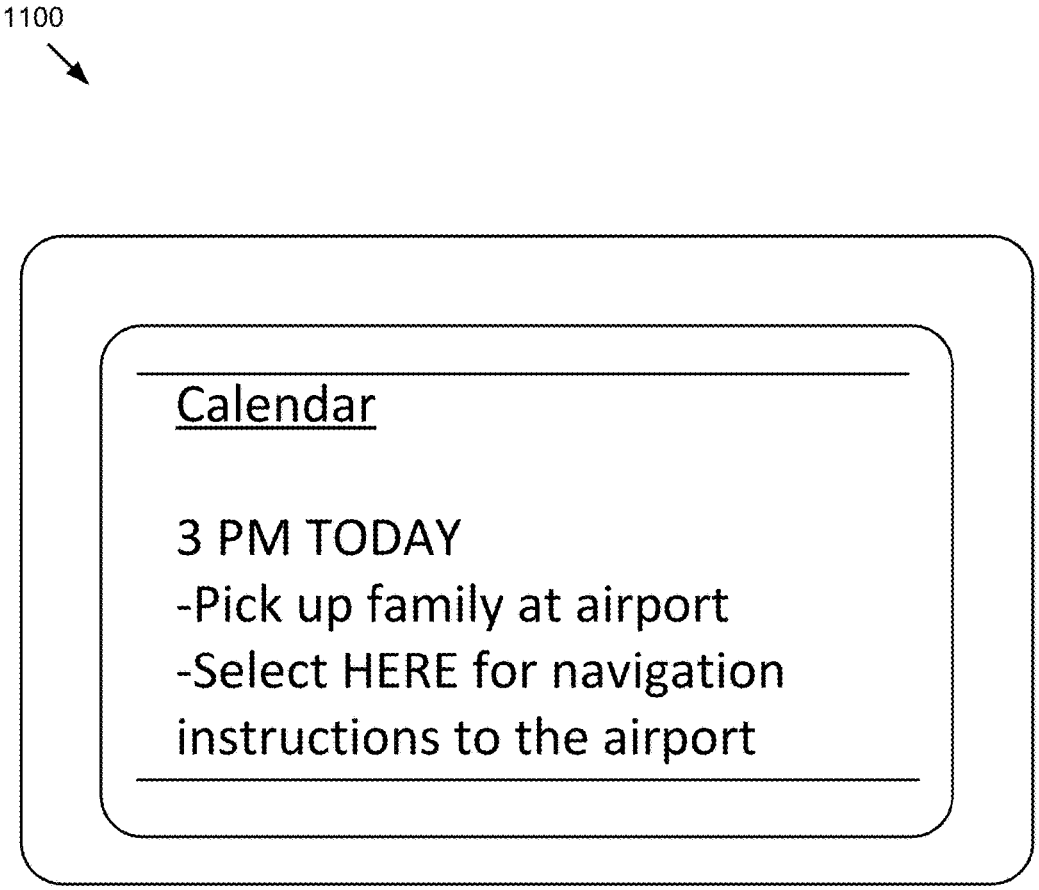
1100
Calendar
3 PM TODAY
-Pick up family at airport
-Select HERE for navigation instructions to the airport

Figure 11

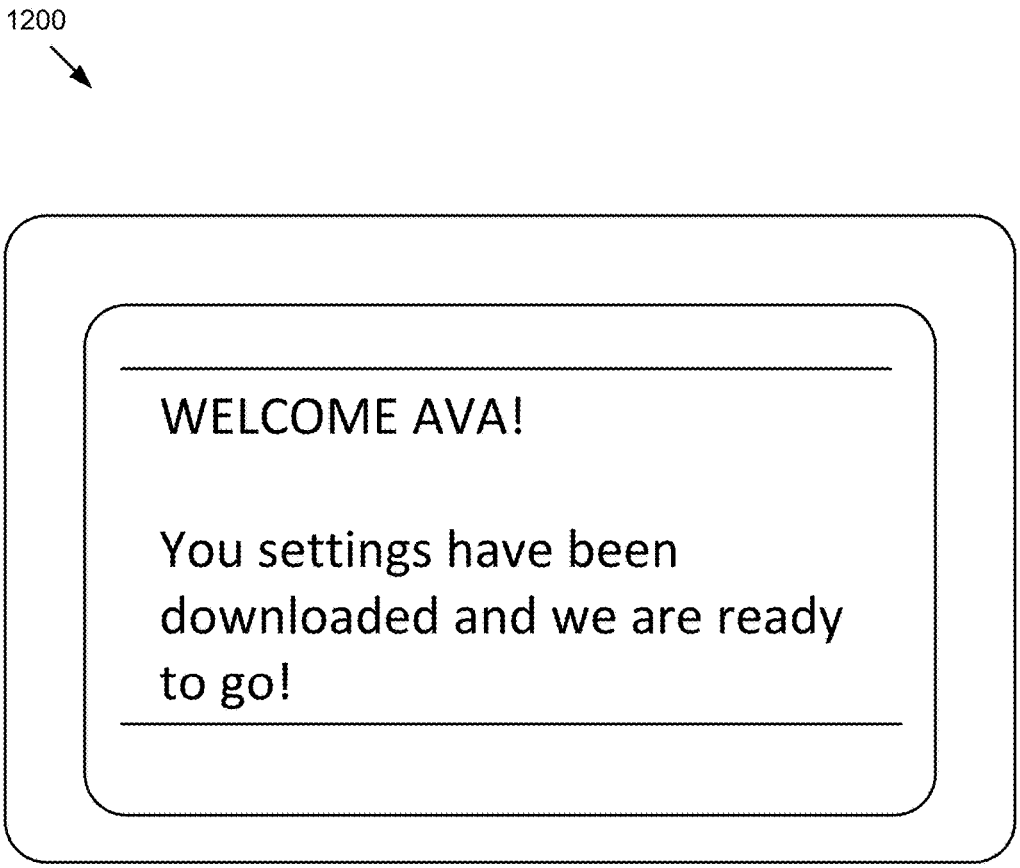
1200
WELCOME AVA!
You settings have been downloaded and we are ready to go!

Figure 12

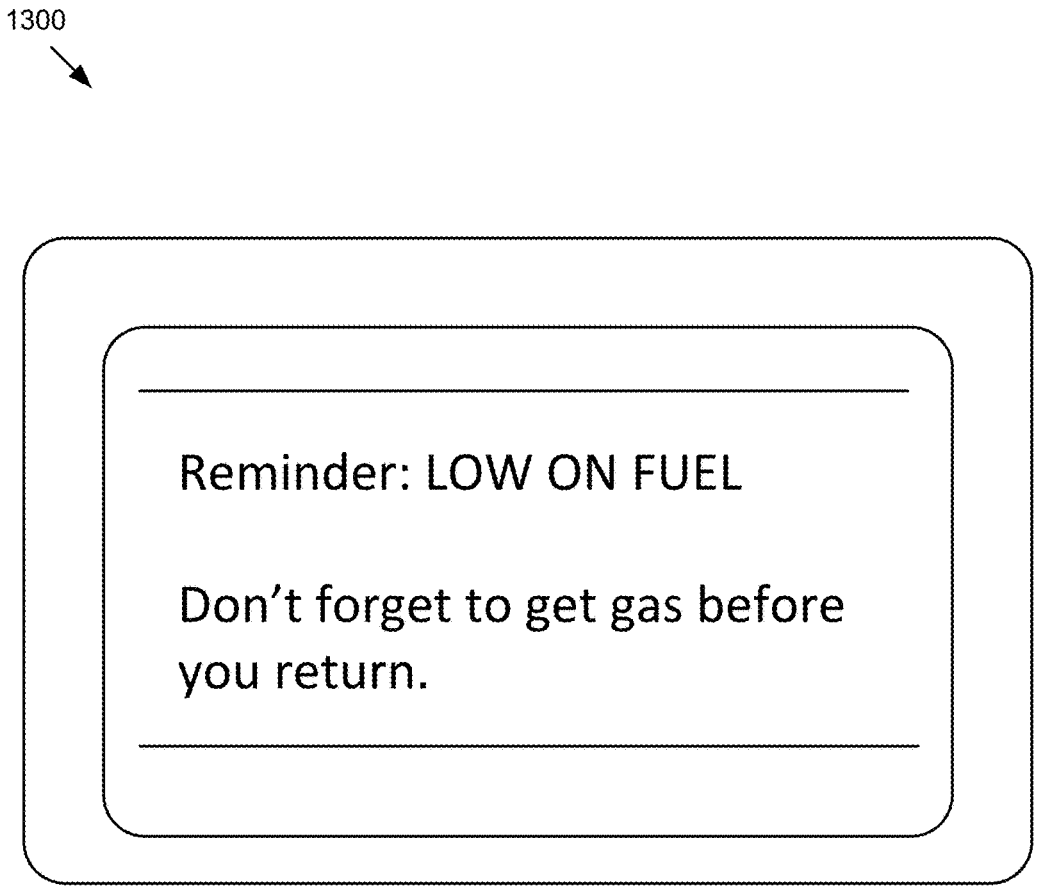
1300
Reminder: LOW ON FUEL
Don't forget to get gas before you return.

Figure 13

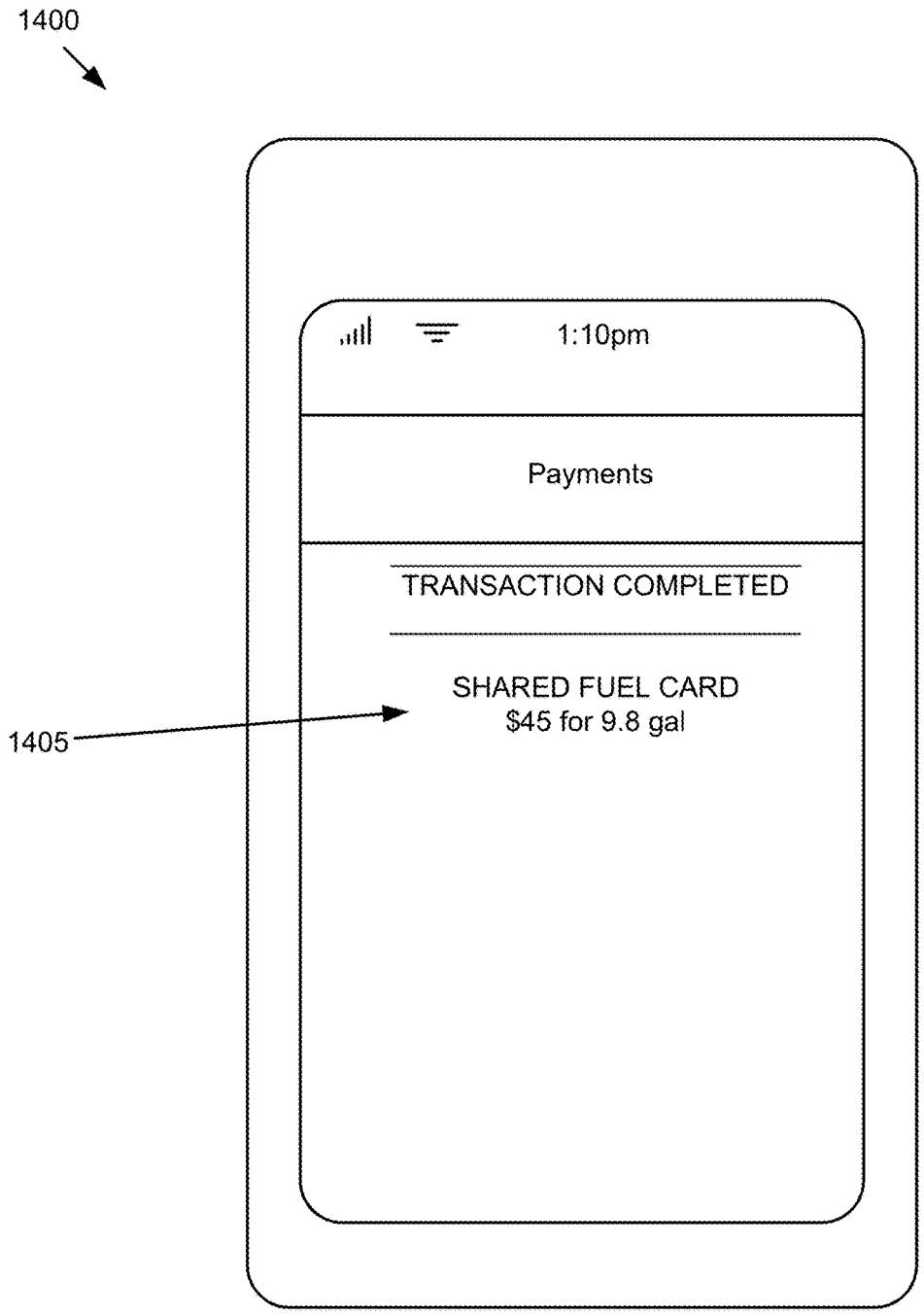
1400
1:10pm
Payments
TRANSACTION COMPLETED
SHARED FUEL CARD
$45 for 9.8 gal
1405

Figure 14

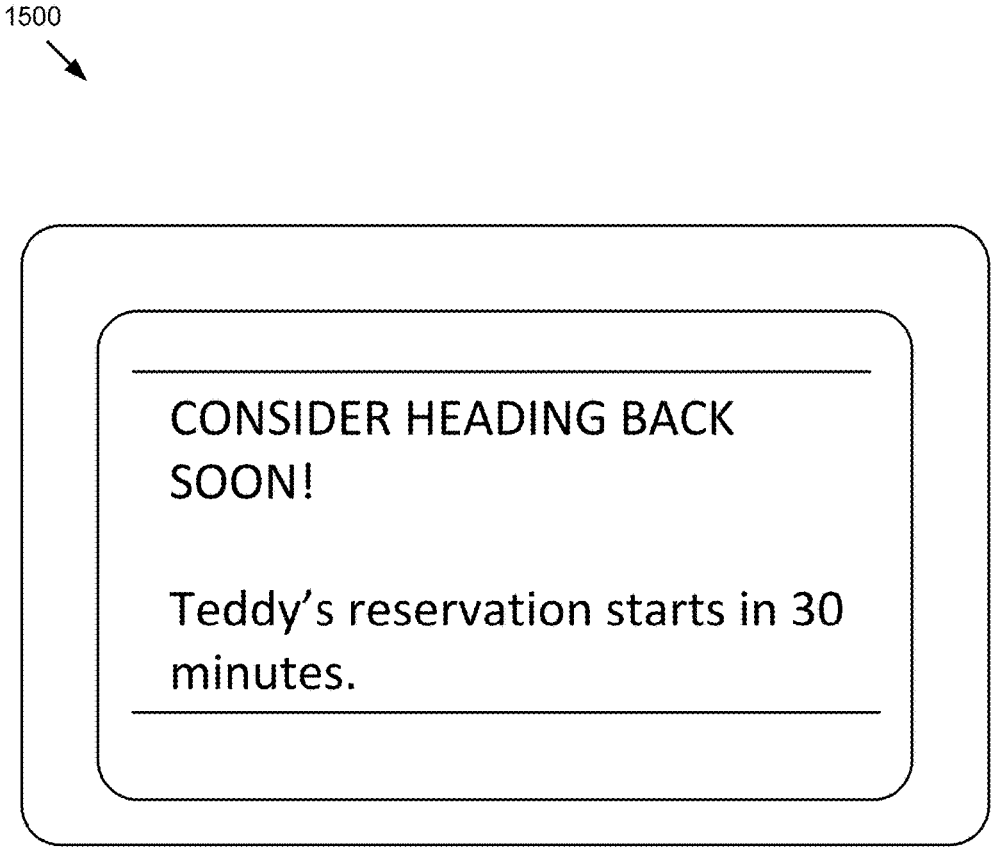
1500
CONSIDER HEADING BACK SOON!
Teddy's reservation starts in 30 minutes.

Figure 15

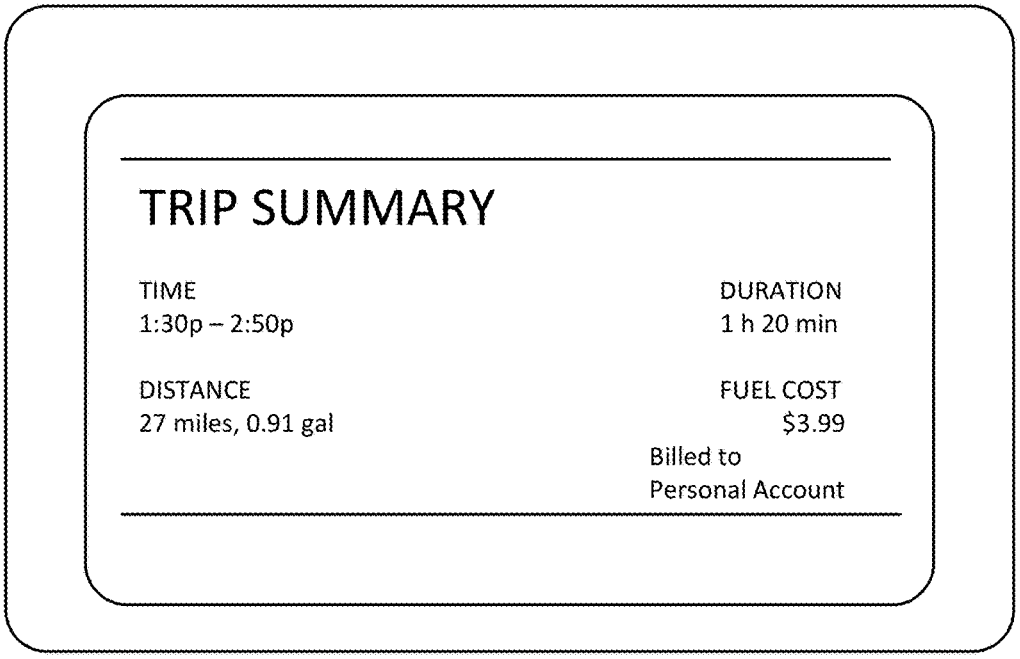
1600
TRIP SUMMARY
TIME
1:30p – 2:50p
DURATION
1 h 20 min
DISTANCE
27 miles, 0.91 gal
FUEL COST
$3.99
Billed to
Personal Account

Figure 16

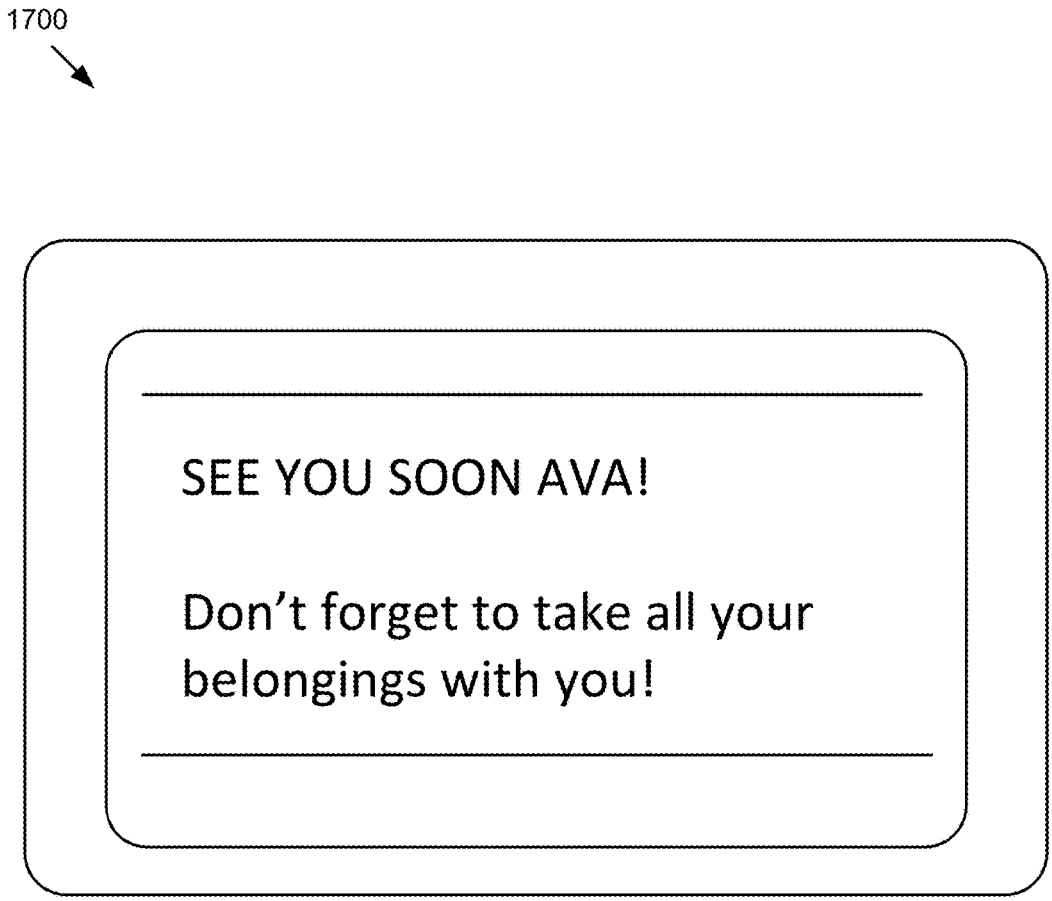
1700
SEE YOU SOON AVA!
Don't forget to take all your belongings with you!

Figure 17

USER PROFILE SYNCHRONIZATION FOR A VEHICLE

CROSS-REFERENCE TO RELATED APPLICATIONS

This patent application is a continuation of U.S. patent application Ser. No. 15/361,274, entitled, "User Profile Synchronization for a Vehicle" filed on Nov. 25, 2016, which is a continuation of U.S. patent application Ser. No. 14/570,541 entitled "User Profile Synchronization for a Vehicle" filed on Dec. 15, 2014 (now U.S. Pat. No. 9,533,640), the entirety of each of which is hereby incorporated by reference.

BACKGROUND

The specification relates to providing user profile synchronization for a vehicle. For example, the specification relates to providing user profile synchronization for two or more users of a single vehicle.

Not all users can afford to drive a vehicle. Current alternatives to vehicle ownership include taxis, public transportation and vehicle leasing. Taxis and public transportation may be undesirable because they are inconvenient or perceived as dangerous or unhygienic. Vehicle leasing may be more desirable than taxis or public transportation. However, many users cannot afford to lease a vehicle.

SUMMARY

According to one innovative aspect of the subject matter described in this disclosure, the disclosure may include a system and method for reconfiguring a vehicle based on one or more preferences of a first user without the first user directly providing an input to the vehicle to reconfigure the vehicle. The method may include wirelessly receiving first user profile data at a vehicle. The first user profile data may be associated with a first user. The first user profile data may describe how one or more settings of the vehicle should be configured for the first user. Upon receipt of the first user profile data, the vehicle may be configured in accordance with second user profile data describing how the one or more settings of the vehicle should be configured for a second user. The method may include reconfiguring the one or more settings of the vehicle based on the first user profile data so that the vehicle is reconfigured for the first user.

In general, another innovative aspect of the subject matter described in this disclosure may be embodied in methods that include: providing a CoLease agreement in which a first user and a second user may lease a vehicle and one or more user specified rules and one or more financial terms of the CoLease agreement provide the first user and the second user with the option to book one or more reservations for the vehicle in accordance with the one or more user specified rules and the one or more financial terms of the CoLease agreement, wherein the one or more user specified rules describe rules associated with use of the vehicle and the one or more financial terms describe the amount of time each of the first user and the second user may use the vehicle during a time period; receiving an input provided to a touchscreen indicating a request of the first user to book a reservation for the vehicle at a specified time chosen by the first user; and initiating wireless transfer of first user profile data associated with the first user to the vehicle via a network so that the vehicle may be reconfigured based on one or more first preferences of the first user as indicated by the first user profile data, wherein prior to the initiating the vehicle was configured based on one or more second preferences of the second user as indicated by second user profile data associated with the second user.

Other aspects include corresponding methods, systems, apparatus, and computer program products for these and other innovative aspects.

The disclosure is particularly advantageous in a number of respects. For example, the disclosure may describe a system and method to enable two or more people to lease the same vehicle under predetermined terms and user specified rules as participants in a CoLease Agreement. The participants in the CoLease agreement may create their own rules for any issue relating to the CoLease agreement. For example, the rules may apply to where the vehicle is to be parked, how to allocate vehicle expenses like fuel and maintenance among the participants, and any other issues relating to the vehicle associated with the CoLease agreement. The system may provide the participants with intuitive Graphical User Interfaces (GUI or GUIs) on their smartphone, tablet computer or laptop. The GUIs may be configured for use with a touchscreen to receive inputs from the participants. The participants may use these GUIs to invite friends or relations to participate in the CoLease agreement. The participants may also use the GUIs to select the vehicle for the CoLease agreement, create the rules for the CoLease agreement and sign the CoLease agreement, etc. The system may also include GUIs, systems and methods to enable the participants to book reservations for using the vehicle, locate the vehicle in a crowded parking lot, bring the vehicle back to a designated location when it is another participant's reserved time for using the vehicle, and manage expenses for the vehicle in accordance with the terms and user specified rules.

BRIEF DESCRIPTION OF THE DRAWINGS

The disclosure is illustrated by way of example, and not by way of limitation in the figures of the accompanying drawings in which like reference numerals are used to refer to similar elements.

FIG. **1** is a block diagram illustrating an example system for providing user profile synchronization.

FIG. **2** is a block diagram illustrating an example user service system.

FIG. **3** is a block diagram illustrating an example agreement system.

FIG. **4** is a block diagram illustrating an example vehicle service system.

FIG. **5** is a flowchart of an example method for synchronizing user profile data for a vehicle.

FIG. **6** is a flowchart of an example method for establishing a CoLease agreement.

FIG. **7** is a graphic representation of an example CoLease menu graphical user interface.

FIG. **8** is a graphic representation of an example booking graphical user interface.

FIGS. **9**A and **9**B are graphic representations of an example vehicle locator graphical user interface.

FIGS. **10**A and **10**B are a flowchart of an example method for reconfiguring a vehicle system based on the user profile data.

FIG. **11** is a graphic representation of an example calendar graphical user interface.

FIG. **12** is a graphic representation of an example personalized user welcome graphical user interface.

IPR2024-00786
Emerging Auto EX2010

FIG. **13** is a graphic representation of an example vehicle function reminder graphical user interface.

FIG. **14** is a graphic representation of an example vehicle function payment graphical user interface.

FIG. **15** is a graphic representation of an example booking reminder graphical user interface.

FIG. **16** is a graphic representation of an example trip summary graphical user interface.

FIG. **17** is a graphic representation of an example salutation graphical user interface.

DETAILED DESCRIPTION

A problem with current vehicle leases is that the customer is required to lease a whole vehicle for private use. However, the customer may only need a vehicle for a few days out of the week. These customers may prefer to share a lease for a vehicle with some of their friends. Some customers may not be able to afford lease payments or vehicle expenses for a private vehicle and would prefer to share the vehicle, lease contract and payments and vehicle expenses with some of their friends. Currently, customers have no way to share a vehicle lease, lease payments and vehicle expenses with their friends.

This disclosure includes a systems, methods and graphical user interfaces (GUIs) that provide a "CoLease service." The CoLease service may include a vehicle lease in which multiple people lease the same vehicle under predetermined contract terms and user-specified rules. A group of people may participate in the CoLease service by electronically signing a CoLease agreement using a touchpad of an electronic device. The people may participate in the CoLease agreement as individuals who are not participating in a vehicle service through their employer. In some implementations, the individuals that participate in the CoLease agreement are not corporations.

The people who sign the CoLease agreement may be referred to as "participants." The participants in the CoLease agreement may agree to share a vehicle during a lease term and abide by rules defined by the participants when using the vehicle. The participants in the CoLease agreement may create their own rules for any issue relating to the CoLease agreement. For example, the rules may apply to where the vehicle is to be parked (e.g., do not park in a parking lot that is not lit at night), how to allocate vehicle expenses like fuel and maintenance among the participants, and any other issues relating to the vehicle.

The participants may use intuitive, easy to understand GUIs on touchscreen-enabled processor-based computing devices (e.g., a smartphone, tablet computer, laptop, etc.) to invite friends to participate in the CoLease agreement. Participating in the CoLease agreement may include two stages. The first stage may include creating the CoLease agreement. The second stage may include how the participants cooperate together during the term of the CoLease agreement.

For example, assume that a first person has recently graduated from college and has a new job that only requires them to work for three days a week. Because this person only goes to work three days a week, they may be a good candidate to participate in a CoLease agreement. A second person may live near the first person and not be able to afford to lease a private vehicle because they are living on a fixed income. The first person and the second person may be good candidates to participate in the CoLease agreement together. In this way, both people may have access to a vehicle during the times they need the vehicle while still living within their budgets.

The participants in the CoLease agreement may access GUIs on their smartphones to reserve time when they can use the vehicle. The smartphone application may include functionality to assist them in finding the location of the vehicle which may otherwise be hard to locate since they may not have been the last person to park the vehicle.

As the participants use the vehicle, they may each establish their own user profile data. The user profile data may include information such as the participant's ergonomic settings for the vehicle, device pairings, radio presets, music streaming preferences, navigation settings and calendar data. The user profile data implemented by the vehicle may be updated each time a different participant uses the vehicle. Each participant's user profile data may be wirelessly synced from a cloud server and downloaded to the vehicle for each reservation so that the current participant using the vehicle can use the vehicle while enjoying their preferred ergonomic settings, device pairings, radio presets, music streaming preferences, navigation settings and calendar data.

Example System Overview

FIG. **1** illustrates a block diagram of one implementation of a system **100** for providing a vehicle service and user profile synchronization. The system **100** may include a first client **103**A and a second client **103**B, a vehicle system **123**, a content server **107**, a social network server **101**, an agreement server **109**, a chat server **113** and a network **105**. The first client **103**A and the vehicle system **123** may be accessed by a first user **180**A. The second client **103**B and the vehicle system **123** may be accessed by a second user **180**B. The first user **180**A and the second user **180**B may be participants in a CoLease agreement. The vehicle system **123** may be the vehicle shared by the first user **180**A and the second user **180**B in accordance with the CoLease agreement. The first user **180**A and the second user **180**B may be referred to herein collectively or individually as "the users **180**" or "the user **180**." The first client **103**A and the second client **103**B may be referred to herein collectively or individually as "the client **103**" or "the clients **103**."

In the illustrated implementation, the client **103**, vehicle system **123**, content server **107**, social network server **101**, agreement server **109** and chat server **113** may be communicatively coupled via the network **105**. Communication among these elements of the system **100** may be bidirectional. The communication among these elements of the system **100** and the network **105** may be via a wired or wireless connection.

The system **100** may include other servers or devices not shown in FIG. **1** including, for example, a navigation server for providing navigation data, a weather server for providing weather data and a financial server for processing financial payments.

The clients **103** and the vehicle system **123** included in FIG. **1** may be used by way of example. While FIG. **1** illustrates two clients **103** and one vehicle system **123**, the disclosure applies to a system **100** having one or more clients **103** or one or more vehicle systems **123** of varying or same types. Although FIG. **1** illustrates one content server **107**, one social network server **101**, one agreement server **109** and one chat server **113**, the disclosure applies to a system **100** having one or more content servers **107**, one or more social network servers **101**, one or more agreement servers **109** and one or more chat servers **113**. Although FIG. **1** illustrates one network **105** communicatively coupled to

the clients **103**, vehicle system **123**, content server **107**, social network server **101**, agreement server **109** and the chat server **113**, in practice one or more networks **105** may be connected.

The network **105** may be a conventional type, wired or wireless, and may have numerous different configurations including a star configuration, token ring configuration, or other configurations. Furthermore, the network **105** may include a local area network (LAN), a wide area network (WAN) (e.g., the Internet), or other interconnected data paths across which multiple devices may communicate. In some implementations, the network **105** may be a peer-to-peer network. The network **105** may also be coupled to or include portions of a telecommunications network for sending data in a variety of different communication protocols. In some implementations, the network **105** includes Bluetooth® communication networks or a cellular communications network for sending and receiving data including via short messaging service (SMS), multimedia messaging service (MMS), hypertext transfer protocol (HTTP), direct data connection, WAP, e-mail, etc. In some implementations, the network **105** may include a Global Positioning Service (GPS) satellite for providing GPS navigation to the client **103** or the vehicle systems **123**. The network **105** may be a mobile data network such as 3G, 4G, LTE, Voice-over-LTE ("VoLTE"), or any other mobile data network or combination of mobile data networks. In some implementations, the network **105** may include Bluetooth® Low Energy (Bluetooth LE) communication networks or any other Bluetooth® communication network. In some implementations, the network **105** may include dedicated short-range communication (DSRC) networks.

The vehicle system **123** may be a mobile communication node. For example, the vehicle system **123** may be a vehicle (e.g., an automobile, a bus, an airplane, a boat), a general-purpose robot, a special-purpose robot such as an autonomous vehicle or a semi-autonomous vehicle, a drone or any other mobile system. The vehicle system **123** may be an electric vehicle, hybrid vehicle or a vehicle that includes an internal combustion engine.

In some implementations, the vehicle system **123** may include a computing device that includes a memory and a processor. For example, the vehicle system **123** is a vehicle including an onboard computer. In some implementations, the vehicle system **123** may include a mobile client device. For example, the vehicle system **123** may include a tablet, a smartphone, an infotainment system, or another type of computing device.

A user **180** may interact with the vehicle system **123**. For example, the user **180** may be a human that travels in the vehicle system **123**.

The vehicle system **123** may include hardware or software to enable the vehicle system **123** to wirelessly access the network **105**. For example, the vehicle system **123** may include an infotainment system to provide one or more network services to a user **180** of the vehicle system **123**. The vehicle system **123** may receive network services data via the network **105**. The infotainment system of the vehicle system **123** may use the network services data to provide one or more network services to the user. The network services data may be stored on the content server **107**. The network services data may be any data needed to provide the network service to the vehicle system **123**. The network services data may include audio data, video data, e-mail data, calendar data or any other data necessary to stream the network services described below. For example, the network services data may include audio data for enabling the user **180** of the vehicle system **123** to stream music via the infotainment system of the vehicle system **123**.

In some implementations, the vehicle system **123** may include one or more sensors (not shown), such as a navigation sensor (e.g., a GPS sensor), an infrared detector, a motion detector, a thermostat, a sound detector, and any other type of sensors. For example, the vehicle system **123** may include sensors for measuring one or more of a current time, a current location (e.g., a latitude, longitude, and altitude of a location), an acceleration of the vehicle system **123**, a velocity of the vehicle system **123**, a fuel tank level of the vehicle system **123**, a battery level of the vehicle system **123**, or an activity of an occupant of the vehicle system **123**, etc. The sensors of the vehicle system **123** may include an interior cabin camera, a weight sensor, a carbon monoxide sensor, or any other sensor to detect the activity of the occupant of the vehicle system **123**. The sensors of the vehicle system **123** may include a buffer or some other non-transitory memory to store the network services requested by the user of the vehicle system **123**.

The vehicle system **123** may include one or more of a first user profile data **191**A and a second user profile data **191**B. The first user profile data **191**A may include any data associated with the first user **180**A and the second user profile data **191**B may include any data associated with the second user **180**B. The first user profile data **191**A may be kept separate from the second user profile data **191**B and vice versa. The first user profile data **191**A may be inaccessible by the second user **180**B and the second user profile data **191**B may be inaccessible to the first user **180**A.

In some implementations, the first user profile data **191**A and the second user profile data **191**B may be stored locally on a memory of the vehicle system **123** at the same time. Alternatively, the first user profile data **191**A may only be stored on the vehicle system **123** when the first user **180**A is using the vehicle system **123** and the second user profile data **191**B may only be stored on the vehicle system **123** when the second user **180**B is using the vehicle system **123**. For example, the first user **180**A may book a reservation to use the vehicle system **123** and the agreement server **109** may sync the first user profile data **191**A to the vehicle system **123** in time for use by the first user **180**A in accordance with the reservation to use the vehicle system **123**.

The first user profile data **191**A and the second user profile data **191**B may be referred to herein collectively or individually as "the user profile data **191**." In describing the user profile data **191**, the first user **180**A and the second user **180**B may be referred to collectively or individually as "the user **180**" or "the users **180**." However, it is to be understood that each user **180** has their own user profile data **191** that describes their own preferences for configuring the vehicle system **123**.

The user profile data **191** may describe settings preferred by the user **180** when traveling in the vehicle system **123**. For example, the user profile data **191** may describe one or more ergonomic settings for the vehicle system **123** for use by the vehicle system **123** when the user **180** is traveling in the vehicle system **123**, one or more device pairings for use by the vehicle system **123** when the user **180** is traveling in the vehicle system **123**, user account information for one or more network services associated with the user **180** for use by the vehicle system **123** when the user **180** is traveling in the vehicle system **123**, one or more settings for a navigation system of the vehicle system **123** for use by the vehicle system **123** when the user **180** is traveling in the vehicle

system **123** and one or more electronic calendars for use by the vehicle system **123** when the user **180** is traveling in the vehicle system **123**.

In some implementations, the one or more ergonomic settings described by the user profile data **191** may include ergonomic data describing one or more of the following: how a steering wheel of the vehicle system **123** should be adjusted when the user **180** is traveling in the vehicle system **123**; how a seat of the vehicle system **123** should be adjusted when the user **180** is traveling in the vehicle system **123**; and how one or more mirrors of the vehicle system **123** should be adjusted when the user **180** is traveling in the vehicle system **123**. In some implementations, elements of the vehicle system **123** may be powered by motors that reconfigure these elements based on the ergonomic settings. For example, a driver's seat of the vehicle system **123** may be repositioned by electric motors so that the driver's seat is configured based on the ergonomic settings. The steering wheel and mirrors of the vehicle system **123** may be similarly adjusted. In some implementations, the vehicle module **193** may include code and routines to cause a controller and one or more motors of the vehicle system **123** to reconfigure elements of the vehicle system **123** based on user profile data **191**.

In some implementations, the settings for the one or more device pairings described by the user profile data **191** may include device pairings data describing one or more devices that are authorized to pair with the vehicle system **123** by the user **180** and any data or information necessary for the vehicle system **123** to pair with these devices via a wireless communication network such as Bluetooth. The devices which pair with the vehicle system **123** using the device pairings data may include one or more clients **103** associated with the user **180**. In some implementations, the vehicle module **193** may include code and routines to reconfigure a communication unit of the vehicle system **123** to automatically pair with the one or more clients **103** associated with the user **180** based on the user profile data **191**.

In some implementations, the user account information for one or more network services associated with the user **180** may include any data or information necessary for the vehicle system **123** to stream one or more network services associated with the user **180**. For example, the vehicle system **123** includes an infotainment system that includes functionality to wirelessly stream one or more network services via the network **105**. The vehicle system **123** may include other hardware (e.g., one or more displays, one or more speakers, etc.) or software necessary to enable the user **180** to consume the one or more network services streamed via the network **105**. In some implementations, the vehicle module **193** may include code and routines to reconfigure one or more of a communication unit and an infotainment system of the vehicle system **123** to automatically connect with the one or more network services associated with the user **180** based on the user profile data **191**. In this way the vehicle system **123** may be automatically reconfigured so that the vehicle system **123** can stream content from the one or more network services associated with the user **180** without input from the user **180** to reconfigure the vehicle system **123**.

The network services may include one or more of the following: navigation instructions; streaming audio or video (such as Pandora™, Spotify™, iTunes™, Google Play™ YouTube™, Netflix™, Hulu Plus™, Crackle™, Amazon™ Instant Video, Prime Instant Video, Digital Music Store, Prime Music App Store, etc.); social networking (such as Facebook™ Google+™, LinkedIn™, Tinder™, QQ™, etc.); microblogging (such as Twitter™, Tumblr™, etc.); online chatting (such as Google Chat™, Snapchat™, WhatsApp™, etc.); online content sharing (such as Instagram™, Pinterest™, etc.); e-mail (such as Gmail™, Outlook™ Yahoo! Mail™, etc.); file sharing (such as Dropbox™, Google Drive™, MS OneDrive™, Evernote™ etc.); electronic calendar and scheduling (such as Google™ Calendar, MS Outlook™, etc.); and etc. In some implementations, the client data **195** may include data necessary to enable the user **180** to consume one or more of these networks services via the infotainment system of the vehicle system **123**.

In some implementations, the user profile data **191** may include one or more of the following: one or more radio station presets for an infotainment system of the vehicle system **123** describing how the infotainment system settings should be adjusted when the user **180** is traveling in the vehicle system **123**; one or more audio equalizer settings for the infotainment system of the vehicle system **123** describing how the infotainment system settings should be adjusted when the user **180** is traveling in the vehicle system **123**; one or more thermostat settings or other settings for the climate control system of the vehicle system **123** describing how the climate control system of the vehicle system **123** should be adjusted when the user **180** is traveling in the vehicle system **123**; and one or more garage door settings enabling the vehicle system **123** to control operation of one or more garage doors associated with the user **180**. In some implementations, the vehicle module **193** may include code and routines to reconfigure elements of the vehicle system **123** based on the user profile data **191**. For example, the infotainment system of the vehicle system **123** may be reconfigured to include the radio station presets for the user **180** based on the user profile data **191**.

In some implementations, the one or more settings for the navigation system of the vehicle system **123** included in the user profile data **191** may include the user's home address and any data necessary to enable the vehicle system **123** to navigate to the user's home address when the user **180** is traveling in the vehicle system **123**.

In some implementations, the one or more electronic calendars for use by the vehicle system **123** when the user **180** is traveling in the vehicle system **123** may be included in the network services of the user **180**. Optionally, the one or more electronic calendars may be a local calendar associated with the client **103**.

The vehicle system **123** may include a vehicle module **193**. The vehicle module **193** may include code and routines configured to reconfigure the vehicle system **123** based on the user profile data **191**. For example, the second user **180**B may have booked time with the vehicle system **123** on May 11 at 2:00 PM (Pacific Standard Time, "PST"). The first user **180**A may use the vehicle system **123** on May 11 until 1:30 PM (PST). The vehicle module **193** may monitor the time of day, determine that the second user **180**B has a next booked time to use the vehicle system **193** and initiate a download of the second user profile data **191**B associated with the second user **180** to the vehicle system **123**. The vehicle module **193** may download the second user profile data **191**B from the agreement server **109**. The vehicle module **193** may reconfigure the vehicle system **123** based on the second user profile data **191**B.

In some implementations, the vehicle module **193** may include code and routines configured to provide one or more of the graphical user interfaces ("GUI" or "GUIs") **1100**, **1200**, **1300**, **1500**, **1600**, **1700** described below with reference to FIGS. **11-13** and **15-17**. In some implementations the vehicle module **193** may also include code and routines

configured to provide one or more GUIs **700**, **800**, **900**, **1400** described below with reference to FIGS. **7**, **8**, **9**A, **9**B and **14**. These GUIs may be displayed on a display of the vehicle system **123**. The display of the vehicle system **123** may include a touchscreen. For example, the infotainment system of the vehicle system **123** includes a touchscreen for displaying these GUIs.

The vehicle module **193** may also include code and routines configured to receive inputs via one or more of the GUIs **700**, **800**, **900**, **1100**, **1200**, **1300**, **1400**, **1500**, **1600**, **1700** and take actions responsive to these inputs. For example, the user **180** may provide an input as described below with reference methods **500**, **600**, **1000** of FIGS. **5**, **6**, **10**A and **10**B and the vehicle module **193** may receive this input and take action responsive to this input as described below with reference to methods **500**, **600**, **1000**. In some implementations, the vehicle module **193** may include code and routines configured to provide some or all of the functionality described below with reference to one or more of the GUIs **700**, **800**, **900**, **1100**, **1200**, **1300**, **1400**, **1500**, **1600**, **1700**.

In some implementations, the vehicle module **193** may include code and routines configured to perform one or more steps of the methods **500**, **600**, **1000** of FIGS. **5**, **6**, **10**A and **10**B when executed by a processor such as processor **425** described below with reference to FIG. **4**.

An example implementation of the vehicle module **193** will be described in more detail below with reference to FIG. **4**.

The client **103** may be a processor-based computing device that includes a processor and a memory. For example, the client **103** may be a personal computer, a laptop computer, a tablet computer, a wearable device, a smartphone, a mobile telephone, a personal digital assistant ("PDA"), a mobile e-mail device, a portable game player, a portable music player, set-top box, a network-connected television, a network-connected home device or any other tangible electronic device capable of accessing the network **105**. In some implementations, the wearable device may include, for example, a smartwatch or fitness tracker that communicates via the network **105**.

The client **103** may include a user service module **199** and client data **195**. The user service module **199** may include code and routines configured to provide client data **195** to one or more vehicle systems **123**. For example, the user service module **199** may provide the client data **195** to the vehicle system **123** via Wi-Fi, Bluetooth or some other wireless communication network between the vehicle system **123** and the client **103**. In some implementations, the client **103** may be hardwired to a communication unit of the vehicle system **123** and may provide the client data **195** to the vehicle system **123** via this communicative coupling. An example implementation of the communication unit of the vehicle system **123** is described in more detail below with reference to FIG. **4**.

In some implementations, the user service module **199** may include code and routines configured to generate one or more of the GUIs **700**, **800**, **900**, **1400** described below with reference to FIGS. **7**, **8**, **9**A, **9**B and **14**. In some implementations, the user service module **199** may include code and routines configured to generate one or more of the GUIs **1100**, **1200**, **1300**, **1500**, **1600**, **1700** described below with reference to FIGS. **11-13** and **15-17**. These GUIs may be displayed on a touchscreen of the client **103**.

The user service module **199** may also include code and routines configured to receive inputs via one or more of the GUIs **700**, **800**, **900**, **1100**, **1200**, **1300**, **1400**, **1500**, **1600**, **1700** and take actions responsive to these inputs. For example, the user **180** may provide an input as described below with reference methods **500**, **600**, **1000** of FIGS. **5**, **6**, **10**A and **10**B and the user service module **199** may receive this input and take action responsive to this input as described below with reference to methods **500**, **600**, **1000**. In some implementations, the vehicle module **193** may include code and routines configured to provide some or all of the functionality described below with reference to one or more of the GUIs **700**, **800**, **900**, **1100**, **1200**, **1300**, **1400**, **1500**, **1600**, **1700**.

In some implementations, the user service module **199** may include code and routines configured to perform one or more steps of the methods **500**, **600**, **1000** described below with reference to FIGS. **5**, **6**, **10**A and **10**B when executed by a processor such as processor **225** described below with reference to FIG. **2**.

An example implementation of the user service module **199** is described below in more detail with reference to FIG. **2**.

The client data **195** may include any data stored on the client **103**. For example, the client data **195** may include e-mail data describing e-mails associated with the user **180**, electronic calendar data associated with the user **180**, an electronic address book include data describing one or more contacts associated with the user **180** and one or more email addresses, physical mailing addresses, telephone numbers and notes associated with these contacts.

In some implementations, the client data **195** may include user account information for one or more network services associated with the user **180** as described above with reference to the user profile data **191**. For example, the client data **195** may include any data or information necessary for the user **180** to access or consume network services via the client **103** or the vehicle system **123**.

In some implementations, the client data **195** may be included in the user profile data **191** of the vehicle system **123**. For example, the client **103** may establish a Bluetooth connection with the vehicle system **123** and the user service module **199** may provide the client data **195** to the vehicle system **123** via the Bluetooth connection. The vehicle system **123** may store some or all of the client data **195** in the user profile data **191**. In this way the user **180** may continue to access the client data **195** and user network services associated with the client data **195** while traveling in the vehicle system **123**. For example, the user **180** may travel in the vehicle system **123** and continue to use network services associated with the client data **195** via one or more of a head unit, a heads-up display unit or infotainment system of the vehicle system **123**.

In some implementations, the client data **195** may include X2V data. X2V data may include any type of object-to-vehicle data. X2V data may include information about the object's position. For example, the client data **195** may include one or more bits of data describing the geographic location of the client **103**. In this way, the vehicle system **123** may be able to determine the location of the client **103** relative to the vehicle system **123**.

In some implementations, the client **103** or the vehicle system **123** may include functionality to determine their relative locations using GPS or wireless signal triangulation (e.g., Wi-Fi triangulation). In some implementations, the X2V data may include one or more bits that are an indication of the source of the data.

In some implementations, one or more of the client **103** and the vehicle system **123** may include hardware or software necessary to communicate via DSRC. DSRC may

include one-way or two-way short-range to medium-range wireless communication channels that are designed for automotive use. In some implementations, the DSRC implemented by the vehicle system **123** or the client **103** may use the 5.9 GHz band for transmission.

The social network server **101** may be a hardware server that includes a processor, a memory and network communication capabilities. The social network server **101** may be communicatively coupled to the network **105**. The social network server **101** may send and receive data to and from other elements of the system **100** via the network **105**.

The social network server **101** may include a social network application **111**. The social network application **111** may include code and routines for providing a social network. The social network may be a type of social structure where one or more users **180** may be connected by a common feature. The common feature may include relationships/connections, e.g., friendship, family, work, an interest, etc. The common features may be provided by one or more social networking systems including explicitly defined relationships and relationships implied by social connections with other online users **180**, where the relationships form a social graph. In some examples, the social graph may reflect a mapping of these users **180** and how they may be related.

In some implementations, the social network application **111** may generate a social network that may be used for generating suggestion. For example, the user **180** may be experiencing a life event or have an upcoming life event that may indicate that the user **180** may have an interest in participating in the CoLease service. For example, a first user **180**A may have provided data to a social network indicating that they have a part time job and need a vehicle to travel to work. A second user **180**B may have a relationship with the first user **180**A as indicated by the social graph, and the second user **180**B may provide data indicating that they desire the use of a vehicle but have limited financial resources. In this example, the social network application **111** may work with the vehicle module **193** or the user service module **199** to present an opportunity to form a group of participants in the CoLease service provided by the agreement module **197**. In this way, the social network application **111** may work with one or more of the vehicle module **193** and the user service module **199** to provide personalized recommendations to the users **180** that are configured to assist the users **180** in identifying other users **180** who may want to participate in the CoLease service.

The content server **107** may be a hardware server that includes a processor, a memory and network communication capabilities. The content server **107** may be communicatively coupled to the network **105**. The content server **107** may send and receive data to and from other elements of the system **100** via the network **105**. For example, the content server **107** may be configured to provide one or more networks services to the vehicle system **123** or the client **103**.

The agreement server **109** may be a hardware server that includes a processor, a memory and network communication capabilities. The agreement server **109** may be communicatively coupled to the network **105**. The agreement server **109** may send and receive data to and from other elements of the system **100** via the network **105**. For example, the agreement server **109** may be configured to transmit or manage transmission of the user profile data **191** to the vehicle system **123** responsive to determining that the user **180** has booked a reservation for the vehicle system **123** and it is time to synchronize the user profile data **191** associated with the user **180** with the vehicle system **123** so that the vehicle system **123** is reconfigured for use by the user **180**.

The agreement server **109** may include an agreement module **197**. The agreement module **197** may include code and routines configured to provide the CoLease service. For example, the agreement module **197** may determine an effective CoLease agreement among one or more users **180**, manage reservations for the participants in a CoLease agreement, synchronize user profile data **191** to the vehicle system **123** based on the reservations and the current time, and track and allocate expenses among the participants in the CoLease agreement based on the rules and terms of the CoLease agreement and the actions of participants in relation to the vehicle system **123** including their respective usage of the vehicle system **123**. In some implementations, the effective agreement may be an agreement to participate in a CoLease agreement associated with the vehicle system **123**.

In some implementations, the agreement module **197** may include code and routines configured to provide graphical data for generating one or more of the GUIs **700**, **800**, **900**, **1100**, **1200**, **1300**, **1400**, **1500**, **1600**, **1700** to one or more of the vehicle system **123** or the client **103**. The agreement module **197** may also include code and routines configured to receive inputs to the one or more GUIs **700**, **800**, **900**, **1100**, **1200**, **1300**, **1400**, **1500**, **1600**, **1700** and take actions responsive to these inputs. In some implementations, the agreement module **197** may include code and routines configured to provide some or all of the functionality described below with reference to one or more of the GUIs **700**, **800**, **900**, **1100**, **1200**, **1300**, **1400**, **1500**, **1600**, **1700**.

In some implementations, the agreement module **197** may include code and routines configured to perform one or more steps of methods **500**, **600**, **1000** when executed by a processor such as processor **325** described below with reference to FIG. **3**.

In some implementations, the agreement server **109** may store one or more of the agreement module **197**, the first user profile data **191**A and the second user profile data **191**B in the memory of the agreement server **109**.

An example implementation of the agreement module **197** is described below with reference to FIG. **3**.

In some implementations, one or more of the vehicle module **193**, the user service module **199** and the agreement module **197** may be implemented using hardware including a field-programmable gate array ("FPGA") or an application-specific integrated circuit ("ASIC"). In some other implementations, one or more of the vehicle module **193**, the user service module **199** and the agreement module **197** may be implemented using a combination of hardware and software. In some implementations, one or more of the vehicle module **193**, the user service module **199** and the agreement module **197** may be stored in a combination of the devices and servers, or in one of the devices or servers.

The chat server **113** may include a hardware server that includes a processor, a memory and network communication capabilities. The chat server **113** may be communicatively coupled to the network **105**. The chat server **113** may send and receive data to and from other elements of the system **100** via the network **105**. In some implementations, the chat server **113** may be configured to provide one or more network services to the vehicle system **123** or the client **103**. For example, the chat server **113** provides one or more of the online chatting services described above with reference to the network services. In some implementations, the chat server **113** provides a private online chatting service that is only accessible by the participants of a CoLease agreement or users **180** considering entering into a CoLease agreement.

For example, a participant may tell another participant where the vehicle is parked or let the other participant know they are running behind schedule and may be late for the other participant's reservation. In implementations where the private online chat service is used by prospective participants of a CoLease agreement, the users **180** may chat together, for example, to discuss issues related to the prospective CoLease agreement.

Referring now to FIG. **2**, an example implementation of a user service system **200** is depicted. The user service system **200** may include the user service module **199**, a touch screen **290**, a processor **225**, a communication unit **245** and a memory **227**. These elements of the user service system **200** may be communicatively coupled by a bus **220**. The touchscreen **290** may be communicatively coupled to the bus **220** via signal line **249**. The processor **225** may be communicatively coupled to the bus **220** via signal line **248**. The communication unit **245** may be communicatively coupled to the bus **220** via signal line **246**. The memory **227** may be communicatively coupled to the bus **220** via signal line **244**.

In some implementations, the user service system **200** may be a processor-based computing device. For example, the user service system **200** may be the client **103** described above with reference to FIG. **1**.

In some implementations, the user service system **200** may include a special-purpose computing device configured to generate one or more of the GUIs **700**, **800**, **900**, **1400** described below with reference to FIGS. **7**, **8**, **9**A, **9**B and **14**. In some implementations, the user service system **200** may include a special-purpose computing device configured to generate one or more of the GUIs **1100**, **1200**, **1300**, **1500**, **1600**, **1700** described below with reference to FIGS. **11-13** and **15-17**. These GUIs **700**, **800**, **900**, **1100**, **1200**, **1300**, **1400**, **1500**, **1600**, **1700** may be displayed on the touchscreen **290**. The GUI data **289** may include graphical data for displaying the GUIs **700**, **800**, **900**, **1100**, **1200**, **1300**, **1400**, **1500**, **1600**, **1700** on the touchscreen **290**. In some implementations, some or all of the GUI data **289** is received via the network **105**. For example, the agreement module **197** of the agreement server **109** may transmit the GUI data **289** via the network **105**. The user service system **200** may receive the GUI data **381** and the user service system **200** may store the GUI data **381** as GUI data **289** on the memory **227**. The user service module **199** may retrieve the GUI data **289** from the memory **227** and cause the touchscreen to display one or more of the GUIs **700**, **800**, **900**, **1100**, **1200**, **1300**, **1400**, **1500**, **1600**, **1700** based on the GUI data **289**.

In some implementations, the user service system **200** may include a special-purpose computing device configured to receive inputs via one or more of the GUIs **700**, **800**, **900**, **1100**, **1200**, **1300**, **1400**, **1500**, **1600**, **1700** and take actions responsive to these inputs. For example, the user **180** may provide an input as described below with reference methods **500**, **600**, **1000** of FIGS. **5**, **6**, **10**A and **10**B and the user service module **199** may receive this input and take action responsive to this input as described below with reference to methods **500**, **600**, **1000**. In some implementations, the user service system **200** may include a special-purpose computing device configured to provide some or all of the functionality described below with reference to one or more of the GUIs **700**, **800**, **900**, **1100**, **1200**, **1300**, **1400**, **1500**, **1600**, **1700**.

The touchscreen **290** may include an electronic visual display that the user **180** may control through touch or gestures. The touchscreen **290** may include a display for displaying one or more of the GUIs **700**, **800**, **900**, **1100**, **1200**, **1300**, **1400**, **1500**, **1600**, **1700**. The display of the touchscreen **290** may be configured to receive one or more inputs to the GUIs **700**, **800**, **900**, **1100**, **1200**, **1300**, **1400**, **1500**, **1600**, **1700**. The touchscreen **290** may include hardware, software or a combination of hardware and software for receiving, detecting and interpreting inputs received from the user **180**. In some implementations, the inputs received, detected and interpreted by the touchscreen **290** may include touch or gestures provided by a bare hand or finger of the user **180**. In some implementations, the display of the touchscreen **290** may be configured to receive one or more of the inputs described below with reference to the methods **500**, **600**, **1000** described below with reference to FIGS. **5**, **6**, **10**A and **10**B.

In some implementations, the user **180** may control or provide inputs to the touchscreen **290** by touching the display of the touchscreen **290** with a stylus or pen configured to provide an input to the touchscreen **290**. In some implementations, the user **180** may control or provide inputs to the touchscreen **290** by touching the screen with one or more fingers. The fingers of the user **180** may be bare or gloved in a material configured to provide an input to the touchscreen **290**. In some implementations, the touchscreen **290** may include any hardware or software needed to be controlled or determine inputs based on one or more touches provided by the user **180** to the display of the touchscreen **290**.

In some implementations, the touchscreen **290** may be an element of a smartphone, tablet computer, wearable device such as a smart watch, or touch sensitive monitor or display peripheral. In some implementations, the touchscreen **290** may be an element of a head unit, heads-up display unit or infotainment system included in the vehicle system **123**.

The processor **225** may include an arithmetic logic unit, a microprocessor, a general-purpose controller, or some other processor array to perform computations and provide electronic display signals to a display device. The processor **225** may process data signals and may include various computing architectures including a complex instruction set computer (CISC) architecture, a reduced instruction set computer (RISC) architecture, or an architecture implementing a combination of instruction sets. Although FIG. **2** includes a single processor **225**, multiple processors **225** may be included. Other processors, operating systems, sensors, displays, and physical configurations may be possible.

In some implementations, the user service system **200** may include a special-purpose computing device configured to perform one or more steps of the methods **500**, **600**, **1000** described below with reference to FIGS. **5**, **6**, **10**A and **10**B when executed by the processor **225**.

The memory **227** may store instructions or data that may be executed by the processor **225**. The instructions or data may include code for performing the techniques described herein. The memory **227** may be a dynamic random access memory (DRAM) device, a static random access memory (SRAM) device, flash memory, or some other memory device. In some implementations, the memory **227** may include a non-volatile memory or similar permanent storage device and media including a hard disk drive, a floppy disk drive, a CD-ROM device, a DVD-ROM device, a DVD-RAM device, a DVD-RW device, a flash memory device, or some other mass storage device for storing information on a more permanent basis.

As illustrated in FIG. **2**, the memory **227** stores client data **195**, calendar data **287**, input data **288**, GUI data **289** and financial data **291**. One or more of the calendar data **287**, input data **288**, GUI data **289** and financial data **291** may be

included in the client data **195**. As described above, the client data **195** may be included in the user profile data **191**.

The client data **195** was described above with reference to FIG. **1**, and this description will not be repeated here.

The calendar data **287** may describe one or more electronic calendars for the user **180**. For example, the calendar data **287** may describe one or more electronic calendars that are locally stored on the user service system **200**. The calendar data **287** may be synchronized with the vehicle system **123**. The calendar data **287** may be an element of the user profile data **191**. In this way the user **180** may access and interact with the electronic calendars of the calendar data **287** when traveling in the vehicle system **123**. An example of the user **180** accessing an electronic calendar is described below with reference to FIG. **15**.

The input data **288** may describe one or more inputs provided to one or more of the GUIs **700**, **800**, **900**, **1100**, **1200**, **1300**, **1400**, **1500**, **1600**, **1700**. For example, the input data **288** may describe an input provided to the touchscreen **290** for one or more of the GUIs **700**, **800**, **900**, **1100**, **1200**, **1300**, **1400**, **1500**, **1600**, **1700**.

The GUI data **289** may include data for generating one or more GUIs. The GUI data **289** may be configured to generate GUIs that receive input via the touchscreen **290**. In some implementations, the GUI data **289** may be configured to generate one or more of the GUIs **700**, **800**, **900**, **1100**, **1200**, **1300**, **1400**, **1500**, **1600**, **1700** described below with reference to FIGS. **7-9** and **11-17**. In some implementations, the user service system **200** may be a special-purpose computing device configured to retrieve the GUI data **289** and render one or more of the GUIs **700**, **800**, **900**, **1100**, **1200**, **1300**, **1400**, **1500**, **1600**, **1700**.

In some implementations, the GUI data **289** may be configured to generate GUIs that are optimized for display on a smartphone or a tablet computer. In some implementations, the GUIs generated using the GUI data **289** may be optimized to receive touch inputs (e.g., via the touchscreen **290**).

In some implementations, the GUI data **289** may be configured to generate webpages. For example, the GUI data **289** may be configured to generate one or more encrypted webpages. In some implementations, the GUI data **289** may be configured to generate one or more webpages that are optimized for electronic financial agreements based on inputs provided to a GUI via the touchscreen **290**.

The financial data **291** may describe one or more financial transactions. In some implementations, the financial transactions are electronic financial transactions implemented using a menu module **206** of the user service module **199**. For example, the user **180** purchases gasoline using a near field communication (NFC) module of the communication unit **245**. The financial data **291** may describe account information for the financial account drawn on for the financial transaction. In some implementations, the financial account may be an account shared by one or more participants of the CoLease agreement. For example, the financial account is a fuel card shared among the participants. The financial data **291** may describe the purchases made by one or more of the participants using the financial account. An example financial transaction described by the financial data **291** is described below with reference to FIG. **14**.

The communication unit **245** may transmit and receive data to and from the user service system **200**. In some implementations, the communication unit **245** may include a port for direct physical connection to the network **105** or to another communication channel. For example, the communication unit **245** may include a USB, SD, CAT-5, or similar port for wired communication with one or more elements of the system **100**. In some implementations, the communication unit **245** may include wireless transceiver for exchanging data or other communication channels using one or more wireless communication methods, including IEEE 802.11, IEEE 802.16, Bluetooth®, NFC or another suitable wireless communication method.

In some implementations, the communication unit **245** may include a cellular communications transceiver for sending and receiving data over a cellular communications network including via short messaging service (SMS), multimedia messaging service (MMS), hypertext transfer protocol (HTTP), direct data connection, WAP, e-mail, or another suitable type of electronic communication. In some implementations, the communication unit **245** may include a wired port and a wireless transceiver. The communication unit **245** may also provide other conventional connections to the network **105** for distribution of files or media objects using standard network protocols including TCP/IP, HTTP, HTTPS, and SMTP, etc.

In some implementations, the communication unit **245** may include a NFC module for providing electronic payments via NFC. The NFC module of the communication unit **245** may include code and routines for providing the electronic payments via NFC.

In some implementations, the user service module **199** may include a communication module **202** and a menu module **206**. The communication module **202** may be communicatively coupled to the bus **220** via signal line **222**. The menu module **206** may be communicatively coupled to the bus **220** via signal line **226**.

The communication module **202** may include code and routines configured to handle communications between the user service module **199** and the other components of the user service system **200**. The communication module **202** may be communicatively coupled to the bus **220** via signal line **222**. In some implementations, the communication module **202** may be stored in the memory **227** and accessible and executable by the processor **225**.

The communication module **202** may send and receive data, via the communication unit **245**, to and from one or more of the entities of the system **100**. For example, the communication module **202** transmits, via the communication unit **245**, the client data **195** to the vehicle system **123** via the network **105**.

In some implementations, the communication module **202** may receive touchscreen inputs to a GUI via the communication unit **245**. For example, a user **180** may provide an input to the touchscreen **290**. The communication unit **245** may receive this input via the touchscreen **290** and transmit input data **288** describing the input to the communication module **202**. The communication module **202** may store the input data **288** on the memory **227**. In some embodiments, the user service module **199** may take actions responsive to the input data **288** received by the communication module **202**. In some implementations, the communication module **202** may cause the communication unit **245** to transmit the input data **288** to the agreement server **109** for use by the agreement module **197**.

In some implementations, the communication module **202** receives data from one or more components of the user service system **200** and stores the data in the memory **227**. For example, the communication module **202** receives input data **288** from the touchscreen **290** and stores it in the memory **227**.

The menu module **206** may include code and routines configured to provide the functionality of a CoLease menu GUI. An example of the CoLease menu GUI is depicted in FIG. **7**.

The functionality of the menu module **206** may include providing booking functionality for a client device such as client **103**. An example of the booking functionality that may be provided by the menu module **206** is described below with reference to FIG. **8** and the booking GUI **800**. The menu module **206** may receive one or more inputs to the client **103** to reserve a time slot for the vehicle system **123**. The inputs may describe the time slot in which the user **180** would like to reserve the vehicle system **123**. The vehicle system **123** may be reserved for the exclusive use of the user **180** associated with the reservation. The menu module **206** may store these inputs as input data **288**. The input data **288** may be transmitted to the agreement module **197** or the vehicle module **193** via the network **105**. For example, the input data **288** describing the reservation for the user **180** may be transmitted to the agreement module **197** and the agreement module **197** may determine if the requested time lot is available. If the requested time slot is available, the agreement module **197** may store reservation data **387** indicating that the vehicle system **123** is reserved for the user **180** at the requested time slot. The agreement module **197** may transmit GUI data **381** for displaying an updated version of the booking GUI **800** on the client **103** that includes an indication that the vehicle system **123** is reserved for the user **180** at the time slot requested by the user **180**.

The functionality of the menu module **206** may include providing vehicle locator functionality for a client device such as client **103**. An example of the location functionality that may be provided by the menu module **206** is described below with reference to FIGS. **9**A and **9**B and the vehicle locator GUI **900**. The menu module **206** may receive one or more inputs to the client **103** indicating a request to locate the vehicle system **123**. For example, the user **180** may carry the client **103**. The client **103** may be a smartphone. The Bluetooth® antenna of the client **103** may be activated. The Bluetooth® antenna of the client **103** may be configured to be discoverable by another Bluetooth® enabled device. The user **180** may be attempting to locate the vehicle system **123** associated with the CoLease agreement. The vehicle system **123** may be reserved for the user **180**. The menu module **206** may control functionality of the communication unit **245** to locate the vehicle system **123**. For example, the menu module **206** may use GPS or wireless signal triangulation functionality of the communication unit **245** to locate the vehicle system **123**. The menu module **206** may retrieve GUI data **289** to cause the touchscreen **290** of the vehicle system **123** to display the location of the vehicle system on an electronic map.

In some implementations, the Bluetooth® antenna of the vehicle system **123** may be activated. Since the client **103** is configured to be discoverable, the client **103** and the vehicle system **123** may pair via Bluetooth® responsive to the client **103** coming within range of the Bluetooth® antenna of the vehicle. Responsive to detecting the pairing of the client **103** and the vehicle system **123**, the vehicle module **193** of the vehicle system **123** may cause the headlights or brake lights of the vehicle system **123** to blink so that the user **180** may identify the location of the vehicle system **123**. The blinking of the vehicle lights of the vehicle system **123** may be beneficial, for example, if the vehicle system **123** is among many other vehicle systems **123** in a parking lot and hard to identify among the other vehicle systems **123**. In some implementations, GPS may be imprecise and the blinking of the vehicle lights may assist the user **180** to identify the vehicle system **123**. The vehicle module **193** may be configured to sound a horn of the vehicle contemporaneous to blinking the vehicle lights.

In some implementations, the form of Bluetooth® used by the vehicle system **123** and the menu module **206** may be Bluetooth® LE. In some implementations, the vehicle system **123** and the menu module **206** may use Wi-Fi or some other form of wireless communication instead of Bluetooth® or in combination with Bluetooth®. For example, Wi-Fi triangulation may be used instead of Bluetooth®.

The functionality of the menu module **206** may include providing electronic payment functionality for a client device such as client **103**. An example of the location functionality that may be provided by the menu module **206** is described below with reference to FIG. **14** and the vehicle function payment GUI **1400**. For example, the user **180** purchases gasoline using an NFC module of the communication unit **245**. The financial data **291** may describe account information for the financial account drawn on for the financial transaction. The financial data **291** may describe one or more financial accounts. In some implementations, the financial account may be an account shared by one or more participants of the CoLease agreement. For example, the financial account is a fuel card shared among the participants. The financial data **291** may describe the purchases made by one or more of the participants using the financial account. The menu module **206** may wirelessly transmit financial data **291** to a financial server that operates or controls operation of the financial account. The menu module **206** may track the amount of money spent by one or more participants.

Referring now to FIG. **3**, an example implementation of an agreement system **300** is depicted. The agreement system **300** may include the agreement module **197**, a processor **325**, a communication unit **345** and a memory **327**. These elements of the agreement system **300** may be communicatively coupled by a bus **320**. The processor **325** may be communicatively coupled to the bus **320** via signal line **348**. The communication unit **345** may be communicatively coupled to the bus **320** via signal line **346**. The memory **327** may be communicatively coupled to the bus **320** via signal line **344**.

In some implementations, the agreement system **300** may be a processor-based computing device. For example, the agreement system **300** may be the agreement server **109** described above with reference to FIG. **1**.

In some implementations, the agreement system **300** may include a special-purpose computing device configured to generate one or more of the GUIs **700**, **800**, **900**, **1400** described below with reference to FIGS. **7**, **8**, **9**A, **9**B and **14**. In some implementations, the agreement system **300** may include a special-purpose computing device configured to generate one or more of the GUIs **1100**, **1200**, **1300**, **1500**, **1600**, **1700** described below with reference to FIGS. **11-13** and **15-17**. These GUIs **700**, **800**, **900**, **1100**, **1200**, **1300**, **1400**, **1500**, **1600**, **1700** may be displayed on a touchscreen of one or more of the client **103** and the vehicle system **123**. The GUI data **381** may include graphical data for displaying the GUIs **700**, **800**, **900**, **1100**, **1200**, **1300**, **1400**, **1500**, **1600**, **1700** on the touchscreen of one or more of the client **103** and the vehicle system **123**. For example, the agreement module **197** may transmit all or some of the GUI data **381** to the client **103** and the client **103** may use the GUI data **381** to display the reservations of the booking GUI **800**.

In some implementations, some or all of the GUI data **381** is transmitted via the network **105**. For example, the agreement system **300** may transmit the GUI data **381** via the network **105**. The user service system **200** may receive the GUI data **381** and store it as GUI data **289** on the memory **227**. The user service module **199** of the user service system **200** may retrieve the GUI data **289** from the memory **227** and cause the touchscreen to display one or more of the GUIs **700**, **800**, **900**, **1100**, **1200**, **1300**, **1400**, **1500**, **1600**, **1700** based on the GUI data **289**.

In some implementations, the agreement system **300** may transmit the GUI data **381** via the network **105**, the vehicle service system **400** may receive the GUI data **381** via the network **105** and store it on a memory **427** as GUI data **481** and the vehicle module **193** of the vehicle system **400** may retrieve the GUI data **481** from the memory **427** and cause a touchscreen of an infotainment system of the vehicle service system **400** (or some other display of the vehicle service system **400**) to display one or more of the GUIs **700**, **800**, **900**, **1100**, **1200**, **1300**, **1400**, **1500**, **1600**, **1700** based on the GUI data **481**.

In some implementations, the agreement system **300** may include a special-purpose computing device configured to receive inputs via one or more of the GUIs **700**, **800**, **900**, **1100**, **1200**, **1300**, **1400**, **1500**, **1600**, **1700** and take actions responsive to these inputs. For example, the user **180** may provide an input as described below with reference methods **500**, **600**, **1000** of FIGS. **5**, **6**, **10**A and **10**B and the user service module **199** may receive this input and take action responsive to this input as described below with reference to methods **500**, **600**, **1000**. In some implementations, the agreement system **300** may include a special-purpose computing device configured to provide some or all of the functionality described below with reference to one or more of the GUIs **700**, **800**, **900**, **1100**, **1200**, **1300**, **1400**, **1500**, **1600**, **1700**.

The processor **325**, the communication unit **345** and the memory **327** include similar functionality as the processor **225**, the communication unit **245** and the memory **227** described above with reference to FIG. **2**, and so, these descriptions will not be repeated here.

In some implementations, the agreement system **300** includes a special-purpose computing device configured to perform one or more steps of the methods **500**, **600**, **1000** described below with reference to FIGS. **5**, **6**, **10**A and **10**B when executed by the processor **325**.

As illustrated in FIG. **3**, the memory **327** stores GUI data **381**, selection data **383**, accord data **385**, allocation data **389**, first user profile data **191**A and second user profile data **191**B. The user profile data **191**A and **191**B were described above with reference to FIG. **1**, and so, these descriptions will not be repeated here. The GUI data **381** may include similar data as the GUI data **289** described above with reference to FIG. **2**, and so, that description will not be repeated here. In some implementations, the memory **327** stores some or all of the data described below with reference to the method **600** of FIG. **6**.

The selection data **383** may describe one or more selections of the user **180**. For example, the selection data **383** may describe one or more selections of the user **180** when interaction occurs with one or more of the GUIs **700**, **800**, **900**, **1100**, **1200**, **1300**, **1400**, **1500**, **1600**, **1700** described below with reference to FIGS. **7-9** and **11-17**. In some implementations, the selection data **383** may describe one or more of the selections or user inputs of methods **500**, **600** and **1000** described below with reference to FIGS. **5**, **6**, **10**A and **10**B. For example, the selection data **383** may describe the user selecting one or more of the graphical elements **705**, **710** and **715** described below with reference to FIG. **7**. These inputs may be provided by the user **180** to the touchscreen **290** of the user service system **200**. The user service system **200** may store the inputs as input data **288** and transmit the input data **288** via the network **105**. The agreement system **300** may receive the input data **288** and store it in the memory **327** as selection data **383**.

The accord data **385** may describe an accord associated with the user **180**. For example, the accord data **385** may describe an accord between two or more users **180** to participate in a CoLease agreement. The accord data **385** may include the data described below with reference to method **600** of FIG. **6**. The accord data **385** may provide evidence of the accord as provided to the touchscreen **290** of the user service system **200**.

The reservation data **387** includes data describing one or more reservations for the users **180**. For example, the users **180** are participants in a CoLease agreement, and the reservation data **387** describes one or more reservations for the users **180** to use the vehicle system **123** which is associated with the CoLease agreement. The reservation data **387** may be based on input data **288** received from the user service system **200** via the network **105**. The reservation data **387** was described above with reference to the menu module **206** of the user service module **199**. The reservation data **387** is described in more detail below with reference to FIG. **8**.

The allocation data **389** includes data describing the allocation of one or more financial transactions associated with the CoLease agreement. For example, the allocation data describes different financial transactions associated with the vehicle system **123**, the total cost of these transactions and how much money each participant of the CoLease agreement must pay towards the total based on one or more of the user personalized rules and the financial terms associated with the CoLease agreement.

In some implementations, one or more of the selection data **383**, the accord data **385**, the reservation data **387** and the allocation data **389** may include some or all of the input data **288** described above with reference to FIG. **2**.

The agreement system **300** may include an agreement module **197**. The agreement module **197** may include code and routines configured to provide the CoLease service. For example, the agreement module **197** may determine an effective CoLease agreement among one or more users **180**, manage reservations for the participants in a CoLease agreement, synchronize user profile data **191** to the vehicle system **123** based on the reservations and the current time, and track and allocate expenses among the participants in the CoLease agreement based on the rules and terms of the CoLease agreement and the actions of participants in relation to the vehicle system **123** including their respective usage of the vehicle system **123**. In some implementations, the effective agreement may be an agreement to participate in a CoLease agreement associated with the vehicle system **123**.

The agreement module **197** may include a communication module **302**, an accord module **303**, a reservation module **304**, a synchronization module **306** and an allocation module **308**. The communication module **302** may be communicatively coupled to the bus **320** via signal line **322**. The accord module **303** may be communicatively coupled to the bus **320** via signal line **323**. The reservation module **304** may be communicatively coupled to the bus **320** via signal line **324**. The synchronization module **306** may be communicatively coupled to the bus **320** via signal line **326**. The allocation module **308** may be communicatively coupled to the bus **320** via signal line **328**.

The communication module **302** may include code and routines configured to handle communications between the agreement module **197** and the other components of the agreement system **300**. In some implementations, the communication module **302** may be stored in the memory **327** and accessible and executable by the processor **325**. The communication module **302** of the agreement module **197** provides similar functionality as the communication module **202** of the user service module **199** described above with reference to FIG. **2**, and so, that description will not be repeated here.

The accord module **303** may include code and routines configured to determine an effective CoLease agreement among one or more users **180**. For example, the accord module **303** may include code and routines configured to perform one or more steps of the method **600** described below with reference to FIG. **6** when executed by the processor **325**.

The reservation module **304** may include code and routines configured to manage reservations for the participants in a CoLease agreement. For example, the reservation module **304** may perform one or more steps of method **500** described below with reference to FIG. **5** when executed by the processor **325**. The reservation module **304** may also include code and routines configured to provide some or all of the functionality described below with reference to FIG. **8**. In some implementations, the reservation module **304** may manage reservations for the participants in a CoLease agreement based on the input data **288** received via the network **105** from the user service system **200**. In some implementations, the reservation module **304** may form the reservation data **387** based on the input data **288** and store the reservation data **387** on the memory **327**.

The synchronization module **306** may include code and routines configured to synchronize user profile data **191** to the vehicle system **123**. For example, the synchronization module **306** may synchronize the user profile data **191** to the vehicle system **123** based on the reservations indicated by the reservation data **387** and a current time in the geographic area where the participants reside or where the vehicle system **123** is located. In some implementations, the synchronization module **306** may include code and routines configured to perform one or more steps of the method **500** described below with reference to FIG. **5** when executed by the processor **325**. In some implementations, the synchronization module **306** may track changes to the user profile data **191** and make updates to the user profile data **191** based on the changes.

The allocation module **308** may include code and routines configured to track and allocate expenses among the participants in the CoLease agreement. For example, the allocation module **308** may allocate expenses among the participants in the CoLease agreement based on the rules and financial terms of the CoLease agreement and the actions of participants in relation to the vehicle system **123** including their respective usage of the vehicle system **123**. In some implementations, the allocation module **308** may allocate expenses among the participants in the CoLease agreement based on the financial data **291** received via the network **105** from the user service system **200**. In some implementations, the allocation module **308** may form the allocation data **389** based on the financial data **291** and store the allocation data **389** on the memory **327**.

Referring now to FIG. **4**, an example implementation of a vehicle service system **400** is depicted. The vehicle service system **400** may include the vehicle module **193**, a controller **404**, a motor **406**, a head unit device **499**, a heads-up display unit **497**, an infotainment system **496**, a navigation system **424**, a processor **425**, a communication unit **445** and a memory **427**. These elements of the vehicle service system **400** may be communicatively coupled by a bus **420**. The controller **404** may be communicatively coupled to the bus **420** via signal line **424**. The motor **406** may be communicatively coupled to the bus **420** via signal line **426**. The head unit device **499** may be communicatively coupled to the bus **420** via signal line **430**. The heads-up display unit **497** may be communicatively coupled to the bus **420** via signal line **432**. The infotainment system **496** may be communicatively coupled to the bus **420** via signal line **434**. The navigation system **424** may be communicatively coupled to the bus **420** via signal line **450**. The processor **425** may be communicatively coupled to the bus **420** via signal line **448**. The communication unit **445** may be communicatively coupled to the bus **420** via signal line **446**. The memory **427** may be communicatively coupled to the bus **420** via signal line **444**.

In some implementations, the vehicle service system **400** may be a processor-based computing device. For example, the vehicle service system **400** may be an onboard computer system of the vehicle system **123** described above with reference to FIG. **1**.

In some implementations, the vehicle service system **400** may be a special-purpose computing device configured to generate one or more of the GUIs **700**, **800**, **900**, **1100**, **1200**, **1300**, **1400**, **1500**, **1600**, **1700** described below with reference to FIGS. **7-9** and **11-17**. In some implementations, the vehicle service system **400** may be a special-purpose computing device configured to receive inputs via one or more of the GUIs **700**, **800**, **900**, **1100**, **1200**, **1300**, **1400**, **1500**, **1600**, **1700** and take actions responsive to these inputs. For example, the user **180** may provide an input to a calendar GUI **1100** described below with reference to FIG. **11**, and the vehicle service system **400** may receive this input and take action responsive to this input. In some implementations, the vehicle service system **400** may be a special-purpose computing device configured to provide some or all of the functionality described below with reference to one or more of the GUIs **700**, **800**, **900**, **1100**, **1200**, **1300**, **1400**, **1500**, **1600**, **1700**.

The processor **425**, the communication unit **445** and the memory **427** include similar functionality as the processor **225**, the communication unit **245** and the memory **227** described above with reference to FIG. **2**, and so, these descriptions will not be repeated here.

The vehicle service system **400** may be a special-purpose computing device configured to perform one or more steps of the methods **500**, **600**, **1000** described below with reference to FIGS. **5**, **6** and **10**.

The motor **406** may be an electric motor. The motor **406** may be an element of a vehicle. For example, the motor **406** may be an element of the vehicle system **123**. In some implementations the motor **406** is a servo motor or some other electric motor. Although only one motor **406** is depicted in FIG. **4**, in practice the vehicle service system **400** may include one or more motors **406**.

In some implementations, the motors **406** may be installed in the vehicle to control one or more ergonomic settings of the vehicle. For example, the driver's seat of the vehicle may include one or more motors to control the ergonomic configuration of the driver's seat.

The controller **404** may be a controller for controlling the operations of the motors **406**. The vehicle may include one or more controllers **404**. The controller **404** may use the user profile data **191** to reconfigure the ergonomic configuration of the vehicle based on the ergonomic settings indicated by

the user profile data **191**. For example, assume that a first user **180**A had previously traveled in the vehicle system **123** from 12:00 PM to 1:30 PM and that a second user **180**B having different ergonomic settings was scheduled to travel in the vehicle from 1:30 PM to 3:00 PM. The first user **180**A may park the vehicle system **123** at 1:25 PM. The agreement module **197** may determine that the second user **180**B has reserved time to drive the vehicle starting at 1:30 PM. The agreement module **197** may transmit the second user profile data **191**B to the vehicle system **123** via the network **105**. The vehicle system **123** may include the vehicle service system **400**. The vehicle service system **400** may receive the second user profile data **191**B and store the second user profile data **191**B on the memory **427**. The agreement module **197** may also transmit a signal indicating that the vehicle system **123** should be reconfigured based on the second user profile data **191**B responsive to the pending reservation of the second user **180**B. The vehicle module **193** of the vehicle service system **400** may retrieve the second user profile data **191**B. The vehicle module **193** may use the controller **404** to drive the motors **406** to reconfigure the ergonomic settings of the vehicle system **123** based on the second user profile data **191**B. For example, the driver's seat of the vehicle may be reconfigured to a distance away from the steering wheel that matches or is similar to the distance that is preferred by the second user **180**B as indicated by the second user profile data **191**B. The controller **404** and the motor **406** may reconfigure other elements of the vehicle so that the vehicle has the same or similar ergonomic settings which are preferred by the second user **180**B.

The head unit device **499** may include a hardware device configured to provide the user **180** control of entertainment media and network services provided by the vehicle service system **400**. For example, the vehicle service system **400** is an element of the vehicle system **123** and the head unit device includes functionality to enable the user **180** to control the streaming of content from the content server **107** via the network **105**. The content may include one or more network services.

The heads-up display unit **497** may include hardware for displaying three-dimensional (3D) graphical data in front of a user such that they do not need to look away from the road to view the graphical data. For example, the heads-up display unit **497** may include a physical screen or it may project the graphical data onto a transparent film that is part of the windshield of the vehicle system **123** or part of a reflector lens. In some implementations, the heads-up display unit **497** is included as part of the vehicle system **123** during the manufacturing process or is later installed. In other implementations, the heads-up display unit **497** is a removable device. In some implementations, the graphical data may adjust a level of brightness to account for environmental conditions, such as night, day, cloudy, brightness, etc.

The graphical data used by the heads-up display unit **497** may be stored on the memory **427**. For example, the graphical data used by heads-up display unit **497** may be included in the GUI data **481** stored on the memory **427**. The heads-up display unit **497** may receive graphical data for display from the vehicle module **193** or the communication unit **445**. For example, the heads-up display unit **497** receives GUI data **481** to cause the heads-up display unit **497** to display two dimensional or three dimensional renderings of one or more of the GUIs **700**, **800**, **900**, **1100**, **1200**, **1300**, **1400**, **1500**, **1600**, **1700** described below with reference to FIGS. **7-9** and **11-17**. The heads-up display unit **497** may display graphics as three-dimensional Cartesian coordinates (e.g., with x, y, z dimensions).

The infotainment system **496** may include an in-vehicle infotainment (IVI) system. The infotainment system **496** may include one or more hardware devices to provide one or more of the following: audio entertainment; audiovisual entertainment; automotive navigation; and one or more network services. The content provided by the infotainment system **496** may be locally stored on the memory **427** or streamed to vehicle service system **400** via the network **105**. For example, the vehicle service system **400** is included in the vehicle system **123** and the infotainment system **496** streams one or more network services from the content server **107** via the network **105**.

The navigation system **424** may include an automotive navigation system configured to provide a navigation service. For example, the navigation system **424** may provide one or more of navigation instructions, maps, points of interest, ratings for points of interest and reviews for points of interest. In some embodiments, the navigation system **424** may be an element of the infotainment system **496** or the head unit device **499**.

As illustrated in FIG. **4**, the memory **427** stores GUI data **481**, client data **195** reservation data **387**, allocation data **389**, first user profile data **191**A and second user profile data **191**B. The client data **195**, the first user profile data **191**A and the second user profile data **191**B were described above with reference to FIG. **1**, and so, these descriptions will not be repeated here. The reservation data **387** and the allocation data **389** were described above with reference to FIG. **3**, and so these descriptions will also not be repeated here. The GUI data **481** may include similar data as the GUI data **289** described above with reference to FIG. **2**, and so, this description will not be repeated here.

One or more of the head unit device **499**, infotainment system **496** and the navigation system **424** may include a touchscreen for receiving inputs and selections from a user **180**. The inputs and selections may be described by input data or selection data stored on the memory **427** by the communication unit **445** or the communication module **402**.

In some implementations, the vehicle module **193** may include code and routines configured to generate one or more of the GUIs **700**, **800**, **900**, **1100**, **1200**, **1300**, **1400**, **1500**, **1600**, **1700** described below with reference to FIGS. **7-9** and **11-17** using the GUI data **481**. In some implementations, the vehicle module **193** may include code and routines configured to receive inputs via one or more of the GUIs **700**, **800**, **900**, **1100**, **1200**, **1300**, **1400**, **1500**, **1600**, **1700** and take actions responsive to these inputs. For example, the user **180** may provide an input to a calendar GUI **1600** described below with reference to FIG. **16** using a touchscreen of the infotainment system **496**. The vehicle module **193** may take action responsive to this input. In some implementations, the vehicle module **193** may include code and routines configured to provide some or all of the functionality described below with reference to one or more of the GUIs **700**, **800**, **900**, **1100**, **1200**, **1300**, **1400**, **1500**, **1600**, **1700**.

In some implementations, the vehicle module **193** may include code and routines configured to perform one or more steps of the methods **500**, **600**, **1000** described below with reference to FIGS. **5**, **6**, **10**A and **10**B when executed by the processor **425**.

In some implementations, the vehicle module **193** may include a communication module **402**. The communication module **402** may be code and routines configured to handle communications between the vehicle module **193** and the

other components of the vehicle service system **400**. In some implementations, the communication module **402** may be stored in the memory **427** and accessible and executable by the processor **425**. The communication module **402** may be communicatively coupled to the bus **420** via signal line **422**. The communication module **402** of the vehicle module **193** provides similar functionality as the communication module **202** of the user service module **199** described above with reference to FIG. **2**, and so, that description will not be repeated here.

FIG. **5** is a flowchart of an example method **500** for synchronizing user profile data for a vehicle. In some implementations, the method **500** may be implemented by the agreement module **197**.

At block **502**, reservation data may be retrieved.

At block **504** the time may be monitored. The time may be the current time in the geographic location where a vehicle associated with the reservation data is located. At block **506** a determination is made regarding whether the current time is an approximate time for the start of a reservation. In some implementations, the agreement module **197** may be configured to synchronize or prepare to synchronize the user profile data **191** associated with a user **180** at a threshold amount of time preceding the start of the user's **180** reservation for a vehicle. For example, the user profile data **191** may be synced for the vehicle five minutes before the start of the reservation. Alternatively, the user profile data **191** may be retrieved from a memory and prepared for synchronization. For example, the user profile data **191** may be stored in a buffer.

If the approximate time for the reservation is not met at block **506**, then the method **500** may return to block **504**. If the approximate time for the reservation is met at block **506**, then the method **500** may proceed to block **508**.

Block **508** may include monitoring for an indication that a user **180** associated with the reservation is approaching the vehicle associated with the reservation. For example, a client **103** associated with the user **180** associated with the reservation may pair with the vehicle associated with the reservation. The pairing may include the client **103** and the vehicle pairing via Bluetooth®, Bluetooth® LE or any other wireless protocol. Responsive to the pairing, the vehicle module **193** or the user service module **199** may transmit the indication that the user **180** associated with the reservation is approaching the vehicle associated with the reservation.

At block **510**, a determination may be made regarding whether the indication that a user **180** associated with the reservation is approaching the vehicle associated with the reservation has been received. If the indication has not been received, then the method **500** may return to block **508**. If the indication has been received, then the method may proceed to block **512**.

At block **512**, the user profile data for the user **180** associated with the reservation may be retrieved.

At block **514**, the user profile data may be transmitted to the vehicle. The vehicle service system **400** may then take steps to reconfigure the vehicle based on the user profile data **191** for the user **180** associated with the reservation.

Referring now to FIG. **6**, depicted is a flowchart of an example method **600** for establishing a CoLease agreement. In some implementations, the agreement system **300** may perform one or more steps of the method **600**. In some implementations, the memory **327** stores some or all of the data described below with reference to the method **600**.

At block **602**, the participant data may be received. The participant data may describe or identify one or more users **180** that may participate in the CoLease agreement. For example, the participant data may include the email address for one or more users **180** or an identifier used to begin a chat with the one or more users **180**. The participant data may also include one or more of the following: a name for one or more of the users **180**; a social security number for one or more of the users **180**; a physical address for one or more of the users **180**; a telephone number for one or more of the users **180**; for one or more of the users **180**, a driver's license number and the identity of the issuing state for the driver's license; and vehicle insurance information including a policy number for one or more of the users **180**. The user's **180** may be referred to as participants for the purpose of clarity in identifying that they are participating in a CoLease agreement with each other, or to identify that they are potential participants in a CoLease agreement.

At block **604**, the chat functionality for the participants may be enabled. For example, the agreement server **109** cooperates with the chat server **113** to enable private chats among the users **180** who provided participant data in block **602**. The one or more users **180** may use the chat functionality to discuss which vehicle they would like to associate with the CoLease agreement and different rules and financial terms that may be associated with the CoLease agreement. The participants may also discuss their interest in the CoLease agreement and make a decision about whether they want to continue the process of participating in an effective CoLease agreement.

At block **606**, a vehicle selection may be received. The vehicle selection may describe a vehicle system **123** to be associated with the CoLease agreement for one or more of users **180** that provided participant data at block **602**. For example, the vehicle selection may describe a vehicle which will be shared among the participants as part of the CoLease agreement. In some embodiments, one or more of the users **180** who provided participant data at block **602** may have decided to discontinue the process of participating in an effective CoLease agreement.

At block, **608**, one or more user personalized rules may be received. The user personalized rules may be rules or terms that are written by the one or more users who provided participant data at block **602**. For example, one of the participants may have a preference that the vehicle be parked at night under a street light. This participant may provide text inputs describing this rule. The rule may include a consequence for breaking the rule. The participants may use the chat functionality to discuss this rule. They may edit the rule, leave it as is, or decide to remove the rule. In this way the participants may negotiate among themselves regarding which personalized rules should be included in the CoLease agreement and what content should be included in these rules.

At block **610**, financial terms for the CoLease agreement may be received. The financial terms may describe one or more of the following: a term of the CoLease; a financial cost for being a participant in the CoLease based on the vehicle selection and the term of the CoLease (this may be a monthly fee); a percentage of vehicle use each participant is entitled to per week (or some other time period); a percentage of the cost of the CoLease agreement will be paid by each participant (this percentage may correct to the percentage of vehicle each participant is entitled to per week, or some other time period); a percentage of vehicle fuel and maintenance costs will be paid by each participant; and the identity of one or more participants that will be responsible for ensuring that vehicle maintenance is performed, etc.

At block **612**, one or more of the participants may provide an accord input indicating that they agree to enter into the CoLease agreement with the other participants, that they agree to the vehicle selection, and that they agree to the user personalized rules and the financial terms. The participants may provide the accord input via a touchscreen **290** of the user service system **200**. The accord input may include a handwritten electronic signature inputted to the touchscreen. In some implementations, the agreement system **300** may determine that there is an effective CoLease agreement responsive to receiving the accord input from each of the participants.

In some implementations, some or all of the data described above with reference to method **600** of FIG. **6** may be included in the accord data **385** stored in the memory **327**.

In some implementations, when a participant attempts to book a reservation for the vehicle, the agreement system **300** may analyze what percentage of vehicle use each participant is entitled to per week (or some other time period) according to the financial terms included in the accord data **385**. If the participant requesting the reservation has already used the vehicle in an amount meeting or exceeding their allocation, the agreement system **300** may require that the other participants consent to the reservation before booking the reservation. In this way the agreement module **197** of the agreement system **300** may include code and routines configured to enforce the rules and terms of the CoLease agreement. The terms or rules of the CoLease agreement may also include instructions for how the agreement system **300** may enforce the rules and terms of the CoLease agreement and the agreement system **300** may enforce the rules and terms in accordance with these instructions.

Referring now to FIG. **7**, depicted is a graphic representation of an example CoLease menu GUI **700**. In some implementations, the graphical elements **705**, **710**, **715** of the CoLease menu GUI **700** are configured to be selectable by a user **180** via a touchscreen. Graphical element **705** is configured to be selectable by the user **180** to open the booking GUI, an example of which is depicted in FIG. **8**. Graphical element **710** is configured to be selectable by the user **180** to open the vehicle locator GUI, an example of which is depicted in FIGS. **9**A and **9**B. Graphical element **715** is configured to be selectable by the user to open the vehicle function payment GUI, an example of which is depicted in FIG. **14**.

Referring now to FIG. **8**, depicted is a graphic representation of an example booking GUI **800**. In some implementations, the graphical elements **805**, **810**, **815** of the vehicle function payment GUI **800** are configured to be selectable by a user **180** via a touchscreen. The booking GUI **800** includes a calendar depicting any number of reservations for the participants in a CoLease agreement.

In some implementations, all of the reservations viewable by the booking GUI **800** are associated with participants for the same CoLease agreement. In this way, reservations may be privately viewable among the participants of the same CoLease agreement, and not viewable by other users who are not participants in this particular CoLease agreement. In some embodiments, accessing the booking GUI **800** requires the participants to provide a secret. For example, a participant must provide a password before accessing the booking GUI **800**.

Graphical element **805** includes a reservation for a participant named "Elizabeth" and lasting ninety minutes from 12:00 PM until 1:30 PM. The other participants in Elizabeth's CoLease agreement may view this reservation via the booking GUI **800**, whereas other users who are not participants in Elizabeth's CoLease agreement may not view any of the reservations depicted in the booking GUI **800**.

Assume that the participant named "Ava" does not current have a reservation. Ava may view the booking GUI **800** and observe that Elizabeth has a reservation lasting from 12:00 PM until 1:30 PM. Ava may select graphical element **810** to indicate that she would like to book a reservation. For example, Ava may touch graphical element **810** on the touchscreen **290** of the client **103** to begin booking a reservation. After selecting graphical element **810**, Ava may select a region of the calendar and provide one or more inputs to indicate the start time for her reservation, the end time for her reservation and, optionally, a note to indicate the purpose of the reservation. These inputs may then be transmitted from the user service system **200** to the agreement system **300** to book the reservation.

In some implementations, the agreement system or the user service system **200** will provide a participant with an error message if they attempt to book a reservation that conflicts with another participant's reservation. For example, in FIG. **8** Ava could not book a reservation beginning at 1:00 PM since it would conflict with Elizabeth's pre-existing reservation.

Graphical element **815** includes a reservation for Ava lasting ninety minutes from 1:30 PM until 3:00 PM.

Referring now to FIGS. **9**A and **9**B, depicted are graphic representations of an example vehicle locator GUI **900**. For example, the user **180** may carry the client **103**. The client **103** may be a smartphone. The Bluetooth® antenna of the client **103** may be activated. The Bluetooth® antenna of the client **103** may be configured to be discoverable by another Bluetooth® enabled device. The user **180** may be attempting to locate the vehicle associated with the effective CoLease agreement. The user service module **199** may use GPS or wireless signal triangulation to locate the vehicle and display the location of the vehicle on an electronic map. The Bluetooth® antenna of the vehicle may be activated. The client **103** and the vehicle may pair via Bluetooth® responsive to the client **103** coming within range of the Bluetooth® antenna of the vehicle. Responsive to detecting the pairing of the client **103** and the vehicle, the vehicle module **193** may cause the headlights or brake lights of the vehicle to blink so that the user **180** may identify the location of the vehicle. The blinking of the vehicle lights may be beneficial, for example, if the vehicle is among many other vehicles and hard to identify among the other vehicles. In some implementations, GPS may be imprecise and the blinking of the vehicle lights may assist the user **180** to identify the vehicle. The vehicle module **193** may be configured to sound a horn of the vehicle contemporaneous to blinking the vehicle lights.

In some implementations, the heads-up display unit **497** of the vehicle includes a graphical display panel configured to face outwards, i.e., facing outside the vehicle and away from the interior cabin so that the graphical display is viewable outside of the vehicle. In some implementations, the outward facing graphical panel of the heads-up display unit **497** may be configured to display a personalized greeting for the user **180** responsive to the vehicle module **193** detecting the pairing of the vehicle and the client **103** via Bluetooth®. For example, the outward facing graphical panel may display a message similar to the personalized welcome GUI **1200** depicted in FIG. **12**. In some implementations, responsive to the pairing of the vehicle and the client **103** via Bluetooth®, the user profile data **191** associated with the user **180** may be provided to the vehicle via the network **105**. The vehicle module **193** may include graphical

data for a template welcome GUI that is personalized based on the name of the user **180** as indicated by the user profile data **191**. In some implementations, the user profile data **191** is provided to the vehicle responsive to other events. For example, the user profile data **191** may be provided to the vehicle by the agreement module **197** responsive to the current time corresponding to a reservation for the user **180**.

In some implementations, the form of Bluetooth® used by the vehicle and the client **103** may be Bluetooth® LE. The vehicle may be configured to include an auxiliary battery for powering the Bluetooth® antenna of the vehicle.

In some implementations, the functionality described above for locating the vehicle and causing the blinking of the vehicle lights or provide a personalized message on the outward facing graphical panel may use Wi-Fi or some other form of wireless communication instead of Bluetooth® or in combination with Bluetooth®. For example, Wi-Fi triangulation may be used instead of Bluetooth®.

Referring to FIG. **9**A, graphical element **905** may display a chat window for enabling the participants of the CoLease agreement to communicate with one another. For example, assume that Elizabeth and Ava are participants in a CoLease agreement together. Further assume that Elizabeth has a reservation for the vehicle from 12:00 PM until 1:30 PM and that Ava has a reservation from 1:30 PM until 3:00 PM. Elizabeth may send a message to Ava to indicate that she parked the vehicle in a different location than Ava may have expected. For example, the rules or terms of the CoLease agreement may regulate where the vehicle should be parked, and Elizabeth may be sending Ava a message using graphical element **905** to inform Ava that the vehicle is in an unexpected location.

Graphical element **915** may display a real time or near real time indication of how far the client **103** is from the vehicle. For example, the client **103** may be a smartphone associated with Ava. Ava may be looking for the vehicle using the vehicle locator GUI **900**. In this example, graphical element **915** may indicate that the client **103** is 32 feet away from the vehicle.

Graphical element **915** may display an electronic map that depicts the relative location of the vehicle and the client **103** and a path that may be taken by the user **180** in order to locate the vehicle. Graphical element **915** may be updated in real time or near real time. For example, with reference to FIG. **9**B, graphical element **915** may be updated in FIG. **9**B to indicate that the client **103** is 13 feet away from the vehicle.

Referring back to FIG. **9**A, graphical element **920** may be a graphical button selectable by the user **180** to configure whether the vehicle will blink its lights or display a message on the outward facing graphical panel. In this example the graphical element **920** is configured so that the vehicle will blink its lights when the client **103** pairs with the vehicle.

Referring to FIG. **9**B, the graphical element **920** in this example shows that the user **180** has selected to receive a message on the outward facing graphical panel. The user service module **199** may transmit the selection of the user **180** to the vehicle via the network **105** so that the vehicle module **193** takes action corresponding to the selection. Graphical element **905** is updated in FIG. **9**B to show that Ava has responded to Elizabeth's earlier message shown in FIG. **9**A.

Referring now to FIGS. **10**A and **10**B, depicted is a flowchart of an example method **1000** for reconfiguring a vehicle system **123** based on the user profile data **191**. At block **1002** the user profile data **191** may be received. At block **1006** the ergonomic settings for the vehicle system **123** may be reconfigured based on the user profile data **191**. At block **1010** the device pairings for the vehicle may be reconfigured based on the user profile data **191**. At block **1012** the radio presets may be reconfigured based on the user profile data **191**. At block **1014**, the network streaming accounts and preferences may be reconfigured based on the user profile data **191**.

Referring now to FIG. **10**B, at block **1016** the navigation preferences may be reconfigured based on the user profile data **191**. At block **1018**, the calendar data may be reconfigured based on the user profile data **191**. At block **1020**, a personalized welcome message **1020** may be displayed based on the user profile data **191**.

Referring now to FIG. **11**, depicted is a graphic representation of an example calendar GUI **1100**. The calendar GUI **1100** may be displayed, for example, on a touchscreen display of the vehicle system **123**. The calendar GUI **1100** may be personalized for the user **180** having the vehicle system **123** reserved for the given time. For example, the calendar GUI **1100** may display one or more electronic calendars associated with the network services for the user **180**. The calendar GUI **1100** may be configured to include graphical elements that are selectable by the user **180** touching the touchscreen. For example, in the depicted example of FIG. **11** the user **180** may select a portion of the calendar GUI **1100** to receive navigation instructions to the airport, which may be context specific to the calendar entry "Pick up family at airport." In this way the vehicle module **193** includes code and routines configured to determine and generate context specific navigation instructions for the calendar GUI **1100** based on the data included in the calendar entry.

Referring now to FIG. **12**, depicted is a graphic representation of an example personalized user welcome GUI **1200**. The personalized user welcome GUI **1200** may be displayed, for example, on a touchscreen display of the vehicle system **123** or the outward facing panel of the heads-up display unit **497**. The personalized user welcome GUI **1200** may be personalized for the user **180** having the vehicle system **123** reserved for the given time. For example, the personalized user welcome GUI **1200** may display the name of the user **180** based on the user profile data **191**. The personalized user welcome GUI **1200** may be configured to include graphical elements that are selectable by the user **180** touching the touchscreen.

Referring now to FIG. **13**, depicted is a graphic representation of an example vehicle function reminder GUI **1300**. The vehicle function reminder GUI **1300** may be displayed, for example, on a touchscreen display of the vehicle system **123**. The vehicle function reminder GUI **1300** may display information describing a vehicle function that requires the attention of the user **180**. In some implementation, the vehicle function reminder GUI **1300** may be based in part on the reservation data **387**. For example, the vehicle module **193** may include code and routines configured to determine that another reservation follows the present reservation based on the reservation data **387**, and that based on the current fuel level the present user **180** of the vehicle should be provided with vehicle function reminder GUI **1300** to remind the present user **180** to refuel the vehicle. In some implementations, the reservation data **387** may include an indication of the destination of the next reservation or the next user **180**, and the vehicle module **193** may determine that given the context of the destination and the present fuel level, a vehicle function reminder GUI **1300** should be provided to remind the present user **180** to refuel the vehicle.

Referring now to FIG. **14**, depicted is a graphic representation of an example vehicle function payment GUI **1400**. Graphical element **1405** includes a description of a completed transaction using a shared fuel card associated with the participants of the CoLease agreement. For example, the NFC module of the client **103** is used to electronically pay for fuel and the vehicle function payment GUI **1400** is displayed on the client **103** to indicate the payment.

Referring now to FIG. **15**, depicted is a graphic representation of an example booking reminder GUI **1500**. The booking reminder GUI **1500** may be displayed, for example, on a touchscreen display of the vehicle system **123**. The booking reminder GUI **1500** may display information describing a reminder that the present user **180** of the vehicle system **123** should begin to return home, based on one or more of the current geographic locations of the vehicle system **123**, the distance from the current geographic location of the vehicle system **123** to the geographic location of the home, and the start time for the next booked reservation.

Referring now to FIG. **16**, depicted is a graphic representation of an example trip summary GUI **1600**. The trip summary GUI **1600** may be displayed, for example, on a touchscreen display of the vehicle system **123**. The trip summary GUI **1600** may describe the amount of time the vehicle system **123** was used for a given reservation, the distance traveled, the amount of fuel used and the fuel cost attributed to the user **180** associated with the given reservation.

Referring now to FIG. **17**, depicted is a graphic representation of an example salutation GUI **1700**. The salutation GUI **1700** may be displayed, for example, on a touchscreen display of the vehicle system **123**. The salutation GUI **1700** may be personalized for the user **180** based on the user profile data **191** associated with the user **180** of the current reservation.

The implementations of the specification can also relate to an apparatus for performing the operations describe herein. This apparatus may be specially constructed for the required purposes, or it may include a special-purpose computer selectively activated or reconfigured by a computer program stored in the computer. Such a computer program may be stored in a computer-readable storage medium, including, but is not limited to, any type of disk including floppy disks, optical disks, CD-ROMs, and magnetic disks, read-only memories (ROMs), random access memories (RAMs), EPROMs, EEPROMs, magnetic or optical cards, flash memories including USB keys with non-volatile memory, or any type of media suitable for storing electronic instructions, each coupled to a computer system bus.

The specification can take the form of some entirely hardware implementations, some entirely software implementations, or some implementations containing both hardware and software elements. In some preferred implementations, the specification is implemented in software, which includes, but is not limited to, firmware, resident software, microcode, etc.

Furthermore, the description can take the form of a computer program product accessible from a computer-usable or computer-readable medium providing program code for use by or in connection with a computer or any instruction execution system. For the purposes of this description, a computer-usable or computer-readable medium can be any apparatus that can contain, store, communicate, propagate, or transport the program for use by or in connection with the instruction execution system, apparatus, or device.

A data processing system suitable for storing or executing program code will include at least one processor coupled directly or indirectly to memory elements through a system bus. The memory elements can include local memory employed during actual execution of the program code, bulk storage, and cache memories which provide temporary storage of at least some program code in order to reduce the number of times code must be retrieved from bulk storage during execution.

Input/output or I/O devices (including, but not limited to, keyboards, displays, pointing devices, etc.) can be coupled to the system either directly or through intervening I/O controllers.

Network adapters may also be coupled to the system to enable the data processing system to become coupled to other data processing systems or remote printers or storage devices through intervening private or public networks. Modems, cable modem, and Ethernet cards are just a few of the currently available types of network adapters.

Finally, the algorithms and displays presented herein are not inherently related to any particular computer or other apparatus. Various general-purpose systems may be used with programs in accordance with the teachings herein, or it may prove convenient to construct more specialized apparatus to perform the required method steps. The required structure for a variety of these systems will appear from the description below. In addition, the specification is not described with reference to any particular programming language. It will be appreciated that a variety of programming languages may be used to implement the teachings of the specification as described herein.

The foregoing description of the implementations of the specification has been presented for the purposes of illustration and description. It is not intended to be exhaustive or to limit the specification to the precise form disclosed. Many modifications and variations are possible in light of the above teaching. It is intended that the scope of the disclosure be limited not by this detailed description, but rather by the claims of this application. As will be understood by those familiar with the art, the specification may be embodied in other specific forms without departing from the spirit or essential characteristics thereof. Likewise, the particular naming and division of the modules, routines, features, attributes, methodologies, and other aspects are not mandatory or significant, and the mechanisms that implement the specification or its features may have different names, divisions, or formats. Furthermore, as will be apparent to one of ordinary skill in the relevant art, the modules, routines, features, attributes, methodologies, and other aspects of the disclosure can be implemented as software, hardware, firmware, or any combination of the three. Also, wherever a component, an example of which is a module, of the specification is implemented as software, the component can be implemented as a stand-alone program, as part of a larger program, as a plurality of separate programs, as a statically or dynamically linked library, as a kernel-loadable module, as a device driver, or in every and any other way known now or in the future to those of ordinary skill in the art of computer programming. Additionally, the disclosure is in no way limited to implementation in any specific programming language, or for any specific operating system or environment. Accordingly, the disclosure is intended to be illustrative, but not limiting, of the scope of the specification, which is set forth in the following claims.

What is claimed is:

1. A method for a vehicle, the method comprising:

configuring a vehicle based on one or more settings preferred by a first user;

detecting a presence of a client associated with a second user;

displaying a personalized message for the second user;

responsive to determining that the client associated with the second user is associated with a reservation for the vehicle, receiving second user profile data at the vehicle, wherein the second user profile data is associated with the second user of the vehicle and describes how the one or more settings of the vehicle should be configured for the second user; and

reconfiguring, by a processor, the one or more settings of the vehicle based on the second user profile data so that the vehicle is reconfigured for the second user and differently than the one or more settings of the vehicle preferred by the first user.

2. The method of claim 1, further comprising:

determining the one or more settings of the vehicle preferred by the first user from first user profile data describing how the one or more settings of the vehicle should be configured for the first user.

3. The method of claim 2, wherein the first user profile data includes a first description of one or more first ergonomic settings associated with the first user and the second user profile data includes a second description of one or more second ergonomic settings associated with the second user, and the method further comprises reconfiguring the vehicle from the one or more first ergonomic settings to the one or more second ergonomic settings responsive to receiving the second user profile data at the vehicle.

4. The method of claim 3, wherein reconfiguring the vehicle includes activating and controlling an electric motor of the vehicle to reconfigure an element of the vehicle in accordance with the one or more second ergonomic settings included in the second user profile data.

5. The method of claim 2, wherein:

the vehicle was previously configured to pair with one or more first Bluetooth enabled devices which the first user previously paired with the vehicle and not configured to pair with one or more second Bluetooth enabled devices;

the second user profile data includes device pairings data associated with the second user;

the method further comprises reconfiguring the vehicle based on the second user profile data to automatically pair with the one or more second Bluetooth enabled devices which the second user previously paired with the vehicle; and

following reconfiguration, the vehicle is configured to no longer automatically pair with the one or more first Bluetooth enabled devices.

6. The method of claim 2, wherein:

the vehicle was previously configured to stream one or more first network services to the vehicle using first user account information associated with the first user and not configured to stream one or more second network services to the vehicle using second user account information;

the second user profile data includes the second user account information for the one or more second network services associated with the second user;

the method further comprises reconfiguring the vehicle to be able to stream the one or more second network services to the vehicle using the second user account information; and

following reconfiguration, the vehicle is configured to no longer stream the one or more first network services to the vehicle using the first user account information.

7. The method of claim 1, wherein the personalized message is displayed on an outward facing panel of a heads-up display unit of the vehicle.

8. A non-transitory computer-readable medium having computer instructions stored thereon that are executable by a processing device to perform or control performance of operations, the operations comprising:

configuring a vehicle based on one or more settings preferred by a first user;

detecting a presence of a client associated with a second user;

displaying a personalized message for the second user;

responsive to determining that the client associated with the second user is associated with a reservation for the vehicle, receiving second user profile data at the vehicle, wherein the second user profile data is associated with the second user of the vehicle and describes how the one or more settings of the vehicle should be configured for the second user; and

reconfiguring the one or more settings of the vehicle based on the second user profile data so that the vehicle is reconfigured for the second user and differently than the one or more settings of the vehicle preferred by the first user.

9. The computer-readable medium of claim 8, wherein the operations further comprise:

determining the one or more settings of the vehicle preferred by the first user from first user profile data describing how the one or more settings of the vehicle should be configured for the first user.

10. The computer-readable medium of claim 9, wherein the first user profile data includes a first description of one or more first ergonomic settings associated with the first user, the second user profile data includes a second description of one or more second ergonomic settings associated with the second user, and the operations further comprise reconfiguring the vehicle from the one or more first ergonomic settings to the one or more second ergonomic settings responsive to receiving the second user profile data at the vehicle.

11. The computer-readable medium of claim 10, wherein reconfiguring the vehicle includes activating and controlling an electric motor of the vehicle to reconfigure an element of the vehicle in accordance with the one or more second ergonomic settings included in the second user profile data.

12. The computer-readable medium of claim 9, wherein:

the vehicle was previously configured to pair with one or more first Bluetooth enabled devices which the first user previously paired with the vehicle and not configured to pair with one or more second Bluetooth enabled devices;

the second user profile data includes device pairings data associated with the second user;

the operations further comprise reconfiguring the vehicle based on the second user profile data to automatically pair with the one or more second Bluetooth enabled devices which the second user previously paired with the vehicle; and

following reconfiguration, the vehicle is configured to no longer automatically pair with the one or more first Bluetooth enabled devices.

13. The computer-readable medium of claim **9**, wherein:

the vehicle was previously configured to stream one or more first network services to the vehicle using first user account information associated with the first user and not configured to stream one or more second network services to the vehicle using second user account information;

the second user profile data includes the second user account information for the one or more second network services associated with the second user;

the operations further comprise reconfiguring the vehicle to be able to stream the one or more second network services to the vehicle using the second user account information; and

following reconfiguration, the vehicle is configured to no longer stream the one or more first network services to the vehicle using the first user account information.

14. The computer-readable medium of claim **9**, wherein:

the vehicle was previously configured to include one or more first radio station presents associated with the first user and not configured to include one or more second radio station presets associated with the second user;

the second user profile data includes a description of the one or more second radio station presets associated with the second user;

the operations further comprise reconfiguring an infotainment system of the vehicle to include the one or more second radio station presets; and

following reconfiguration, the infotainment system is configured to no longer include the one or more first radio station presets associated with the first user.

15. A system comprising:

a processor; and

a non-transitory memory storing computer code which, when executed by the processor, causes the processor to:

configure a vehicle based on one or more settings preferred by a first user;

detect a presence of a client associated with a second user;

display a personalized message for the second user;

responsive to determining that the client associated with the second user is associated with a reservation for the vehicle, receive second user profile data at the vehicle, wherein the second user profile data is associated with the second user of the vehicle and describes how the one or more settings of the vehicle should be configured for the second user; and

reconfigure the one or more settings of the vehicle based on the second user profile data so that the vehicle is reconfigured for the second user and differently than the one or more settings of the vehicle preferred by the first user.

16. The system of claim **15**, wherein the computer code further causes the processor to:

determine the one or more settings of the vehicle preferred by the first user from first user profile data describing how the one or more settings of the vehicle should be configured for the first user.

17. The system of claim **16**, wherein the first user profile data includes a first description of one or more first ergonomic settings associated with the first user and the second user profile data includes a second description of one or more second ergonomic settings associated with the second user, and the computer code further causes the processor to reconfigure the vehicle from the one or more first ergonomic settings to the one or more second ergonomic settings responsive to receiving the second user profile data at the vehicle.

18. The system of claim **17**, wherein reconfiguring the vehicle includes activating and controlling an electric motor of the vehicle to reconfigure an element of the vehicle in accordance with the one or more second ergonomic settings included in the second user profile data.

19. The system of claim **16**, wherein:

the vehicle was previously configured to pair with one or more first Bluetooth enabled devices which the first user previously paired with the vehicle and not configured to pair with one or more second Bluetooth enabled devices;

the second user profile data includes device pairings data associated with the second user;

the computer code further causes the processor to reconfigure the vehicle based on the second user profile data to automatically pair with the one or more second Bluetooth enabled devices which the second user previously paired with the vehicle; and

following reconfiguration, the vehicle is configured to no longer automatically pair with the one or more first Bluetooth enabled devices.

20. The system of claim **16**, wherein:

the vehicle was previously configured to stream one or more first network services to the vehicle using first user account information associated with the first user and not configured to stream one or more second network services to the vehicle using second user account information;

the second user profile data includes the second user account information for the one or more second network services associated with the second user;

the computer code further causes the processor to reconfigure the vehicle to be able to stream the one or more second network services to the vehicle using the second user account information; and

following reconfiguration, the vehicle is configured to no longer stream the one or more first network services to the vehicle using the first user account information.

* * * * *