US009859297B2

(12) **United States Patent**
Park et al.

(10) **Patent No.: US 9,859,297 B2**
(45) **Date of Patent: Jan. 2, 2018**

(54) **SEMICONDUCTOR DEVICES AND METHODS OF MANUFACTURING THE SAME**

(71) Applicant: **SAMSUNG ELECTRONICS CO., LTD.**, Suwon-si, Gyeonggi-do (KR)

(72) Inventors: **Jong-Hyun Park**, Seoul (KR); **Jee-Yong Kim**, Hwaseong-si (KR); **Dae-Seok Byeon**, Seongnam-si (KR)

(73) Assignee: **SAMSUNG ELECTRONICS CO., LTD.**, Suwon-si, Gyeonggi-do (KR)

(*) Notice: Subject to any disclaimer, the term of this patent is extended or adjusted under 35 U.S.C. 154(b) by 0 days.

(21) Appl. No.: **15/047,882**

(22) Filed: **Feb. 19, 2016**

(65) **Prior Publication Data**

US 2016/0268287 A1 Sep. 15, 2016

Related U.S. Application Data

(60) Provisional application No. 62/130,868, filed on Mar. 10, 2015.

(30) **Foreign Application Priority Data**

Mar. 10, 2015 (KR) 10-2015-0033128
May 18, 2015 (KR) 10-2015-0068931

(51) **Int. Cl.**
H01L 29/792 (2006.01)
H01L 27/11575 (2017.01)
(Continued)

(52) **U.S. Cl.**
CPC ***H01L 27/11575*** (2013.01); ***H01L 27/1157*** (2013.01); ***H01L 27/11565*** (2013.01); ***H01L 27/11582*** (2013.01)

(58) **Field of Classification Search**
CPC H01L 27/11575; H01L 27/11565; H01L 27/11568; H01L 27/11582; H01L 29/7926
See application file for complete search history.

(56) **References Cited**

U.S. PATENT DOCUMENTS

7,211,897 B2 5/2007 Yamanoue et al.
7,679,133 B2 3/2010 Son et al.
(Continued)

FOREIGN PATENT DOCUMENTS

JP 2005-150389 A 6/2005
JP 2005-183779 A 7/2005
(Continued)

Primary Examiner — Fernando L Toledo
Assistant Examiner — Neil Prasad
(74) *Attorney, Agent, or Firm* — Lee & Morse, P.C.

(57) **ABSTRACT**

A semiconductor device includes a substrate including cell and dummy regions, first channel structures on the cell region and extending in a first direction vertical with respect to the substrate, gate lines surrounding outer sidewalls of the first channel structures and extending in a second direction parallel to the substrate, the gate lines being spaced apart from each other along the first direction, cutting lines between the gate lines on the cell region and extending in the second direction, dummy patterns spaced apart from each other along the first direction on the dummy region, the dummy patterns having a stepped shape along a third direction parallel to the top surface of the substrate and perpendicular to the second direction, at least a portion of the dummy patterns including a same conductive material as that in the gate lines, and dummy lines through the dummy patterns.

20 Claims, 31 Drawing Sheets

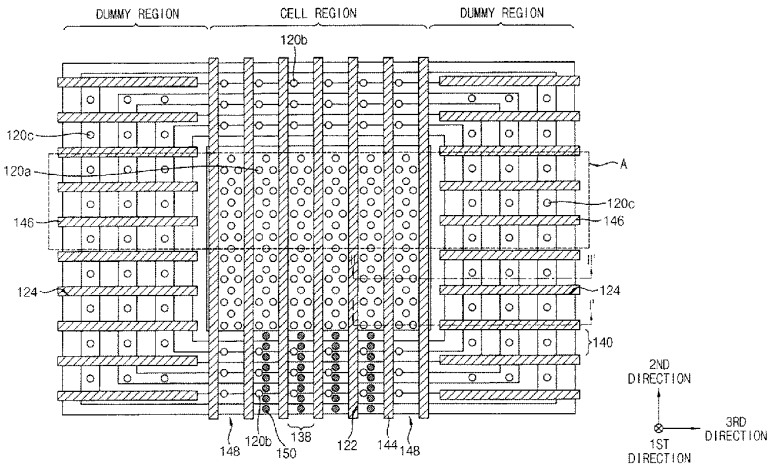

(51) **Int. Cl.**
H01L 27/11565 (2017.01)
H01L 27/11582 (2017.01)
H01L 27/1157 (2017.01)

(56) **References Cited**

U.S. PATENT DOCUMENTS

8,242,583	B2	8/2012	Yune et al.	
8,553,466	B2	10/2013	Han et al.	
8,559,235	B2	10/2013	Yoon et al.	
8,654,587	B2	2/2014	Yoon et al.	
8,865,583	B2	10/2014	Yanagidaira et al.	
8,921,918	B2	12/2014	Shim et al.	
2009/0267135	A1*	10/2009	Tanaka	H01L 27/115 257/324
2009/0315187	A1*	12/2009	Cho	H01L 23/481 257/773
2010/0012997	A1*	1/2010	Jang	H01L 27/11524 257/315
2011/0233648	A1	9/2011	Seol et al.	
2013/0100722	A1	4/2013	Shin	
2014/0183749	A1	7/2014	Lee et al.	
2014/0239375	A1	8/2014	Kim et al.	

FOREIGN PATENT DOCUMENTS

JP	2012-212697	A	11/2012
KR	10-2008-0061991	A	7/2008
KR	10-2010-0102421	A	9/2010
KR	10-2010-0127678	A	12/2010

* cited by examiner

FIG. 1

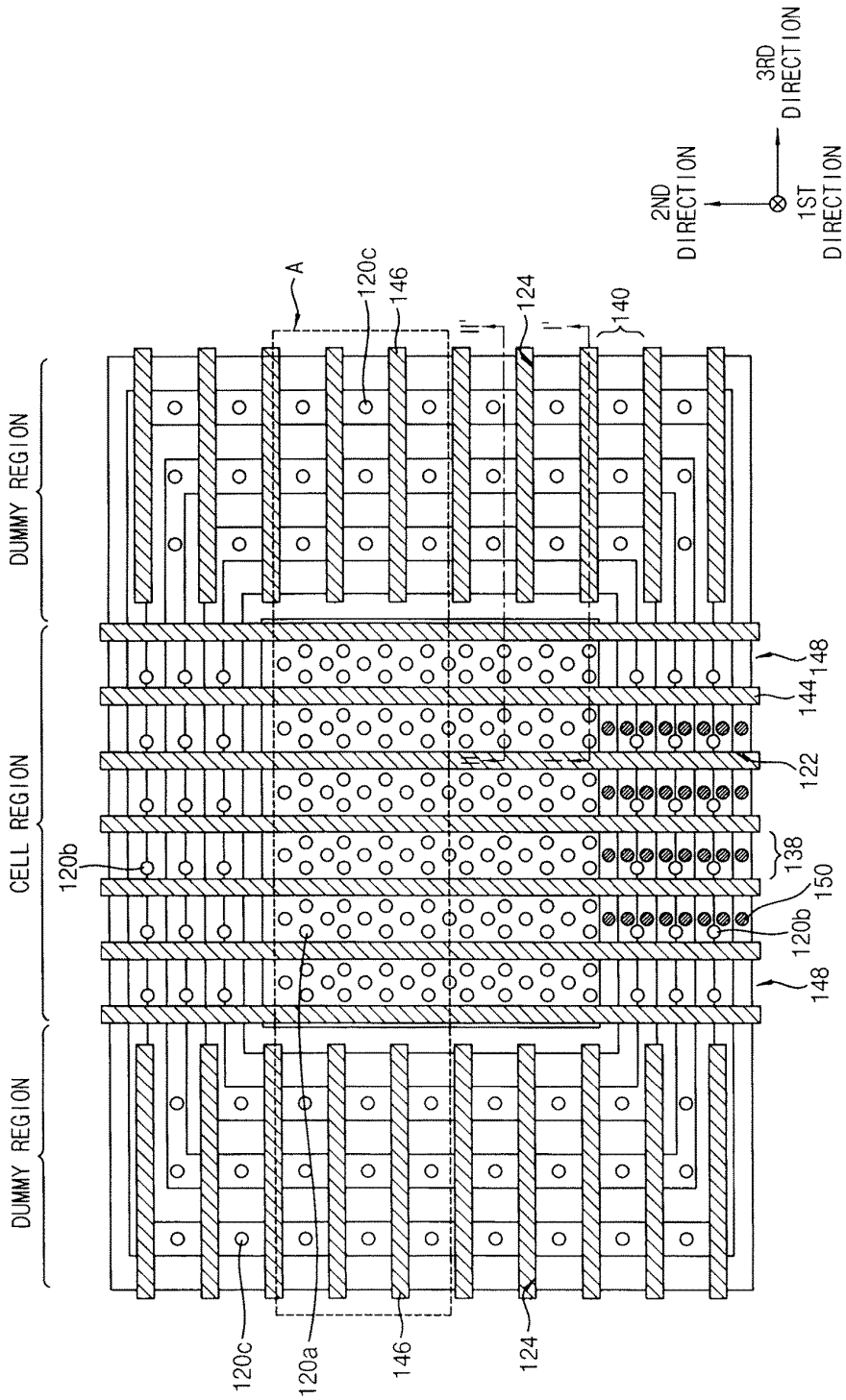
DUMMY REGION
CELL REGION
DUMMY REGION
A
120c
146
124
140
II'
I'
148
144
122
138
150
120b
120b
148
120c
120a
146
124
2ND DIRECTION
3RD DIRECTION
1ST DIRECTION

FIG. 2

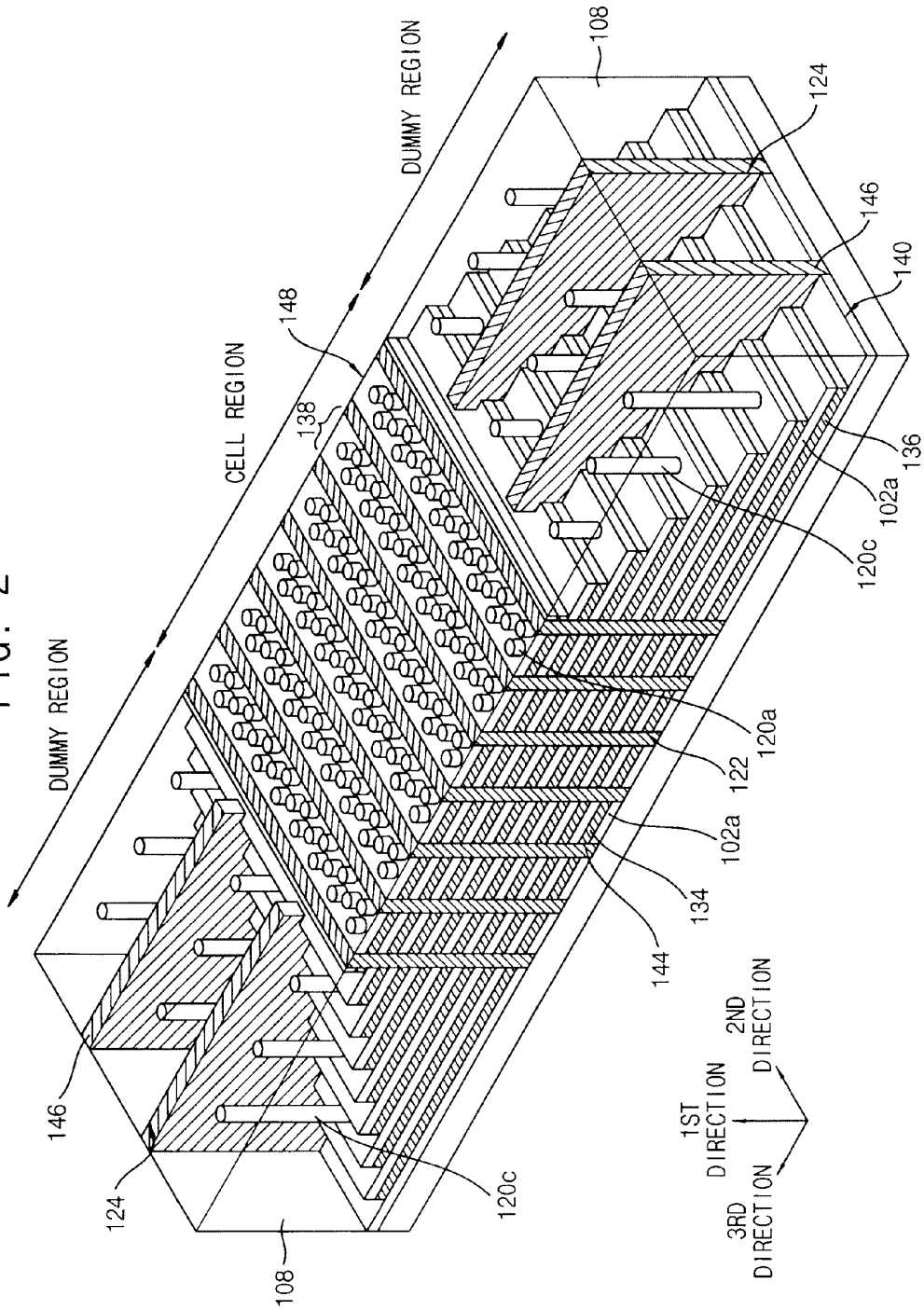
DUMMY REGION
CELL REGION
DUMMY REGION
108
124
146
140
148
138
136
102a
120c
120a
122
102a
134
144
146
124
120c
108
1ST DIRECTION
2ND DIRECTION
3RD DIRECTION

FIG. 3

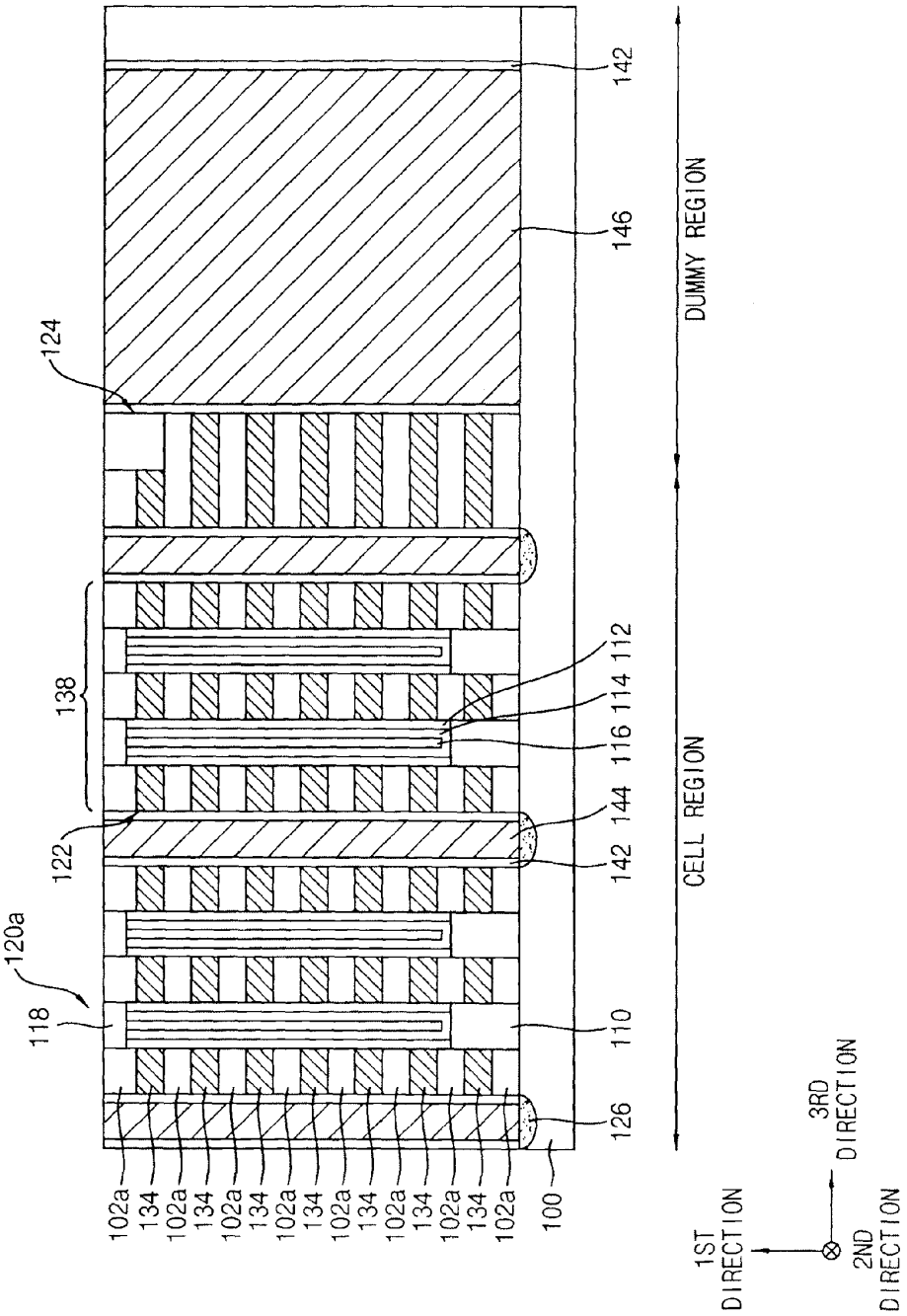
124
138
122
120a
118
102a
134
100
126
110
142
144
116
114
112
146
DUMMY REGION
CELL REGION
1ST DIRECTION
2ND DIRECTION
3RD DIRECTION

FIG. 4

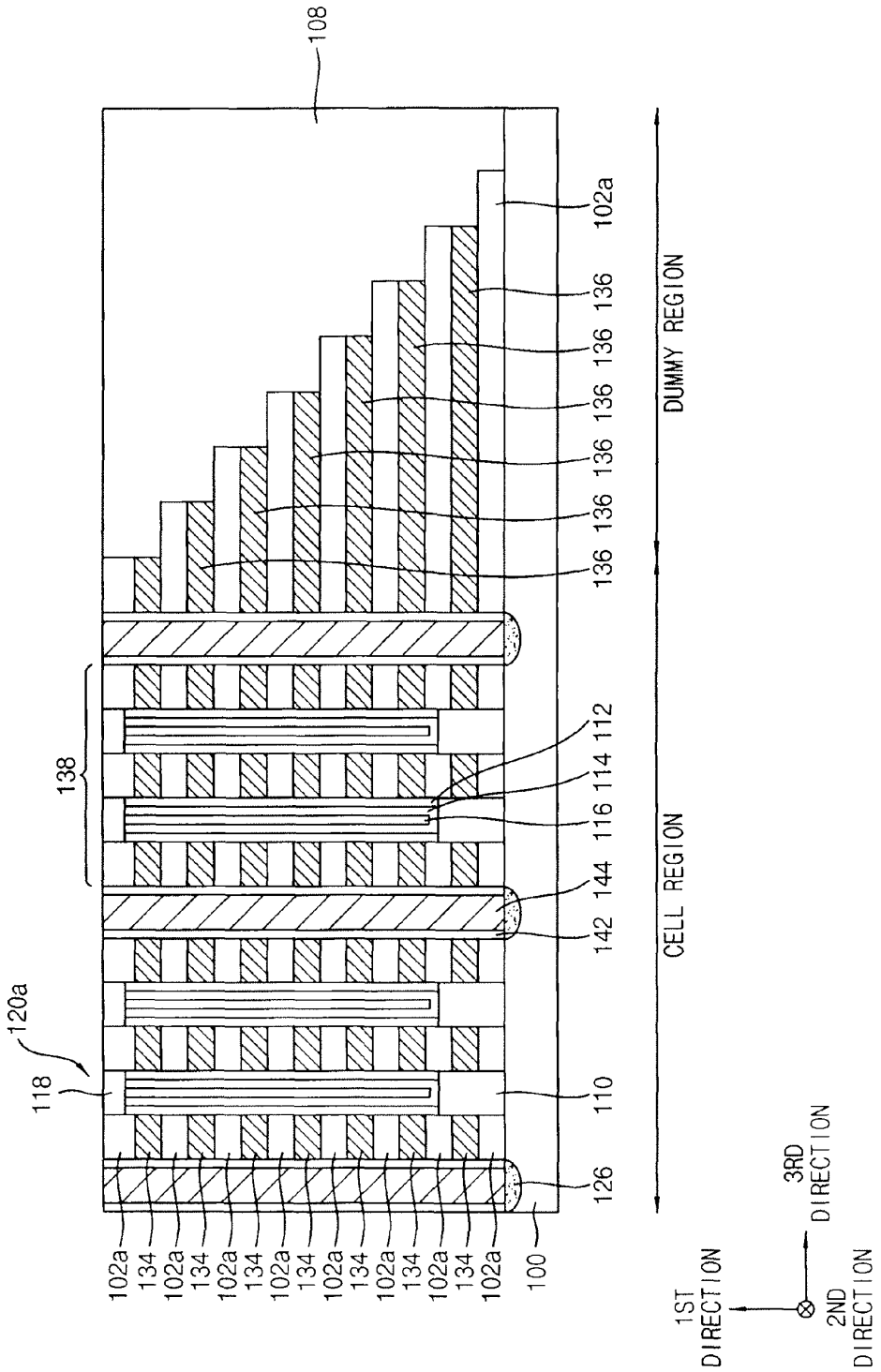
108
102a
136
136
136
136
136
DUMMY REGION
138
112
114
116
144
142
CELL REGION
120a
118
110
126
102a
134
100
1ST DIRECTION
2ND DIRECTION
3RD DIRECTION

FIG. 5

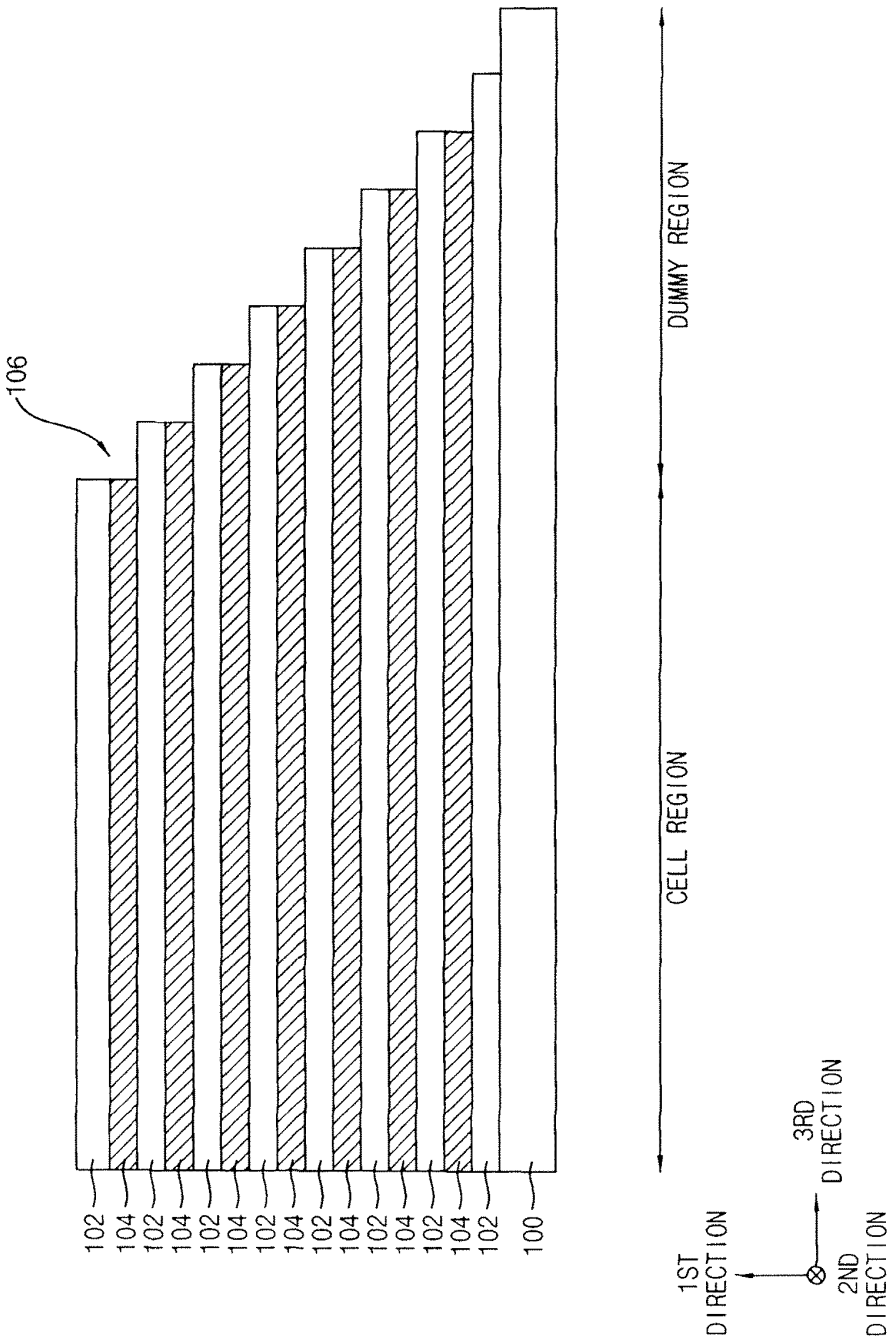
106
102
104
102
104
102
104
102
104
102
104
102
104
102
104
102
100
CELL REGION
DUMMY REGION
1ST DIRECTION
2ND DIRECTION
3RD DIRECTION

FIG. 6

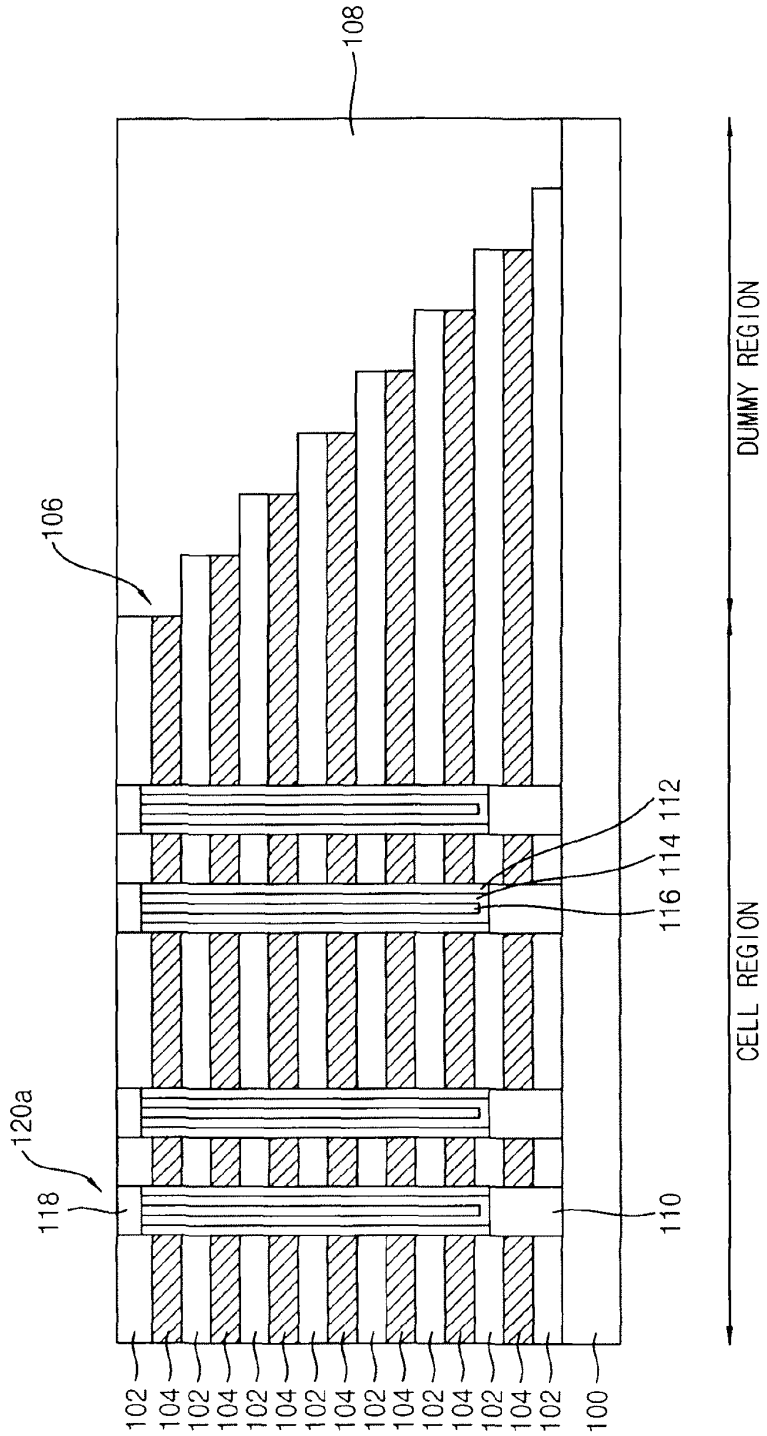
108
106
120a
118
102
104
102
104
102
104
102
104
102
104
102
104
102
104
102
104
102
100
110
116 114 112
CELL REGION
DUMMY REGION

FIG. 7

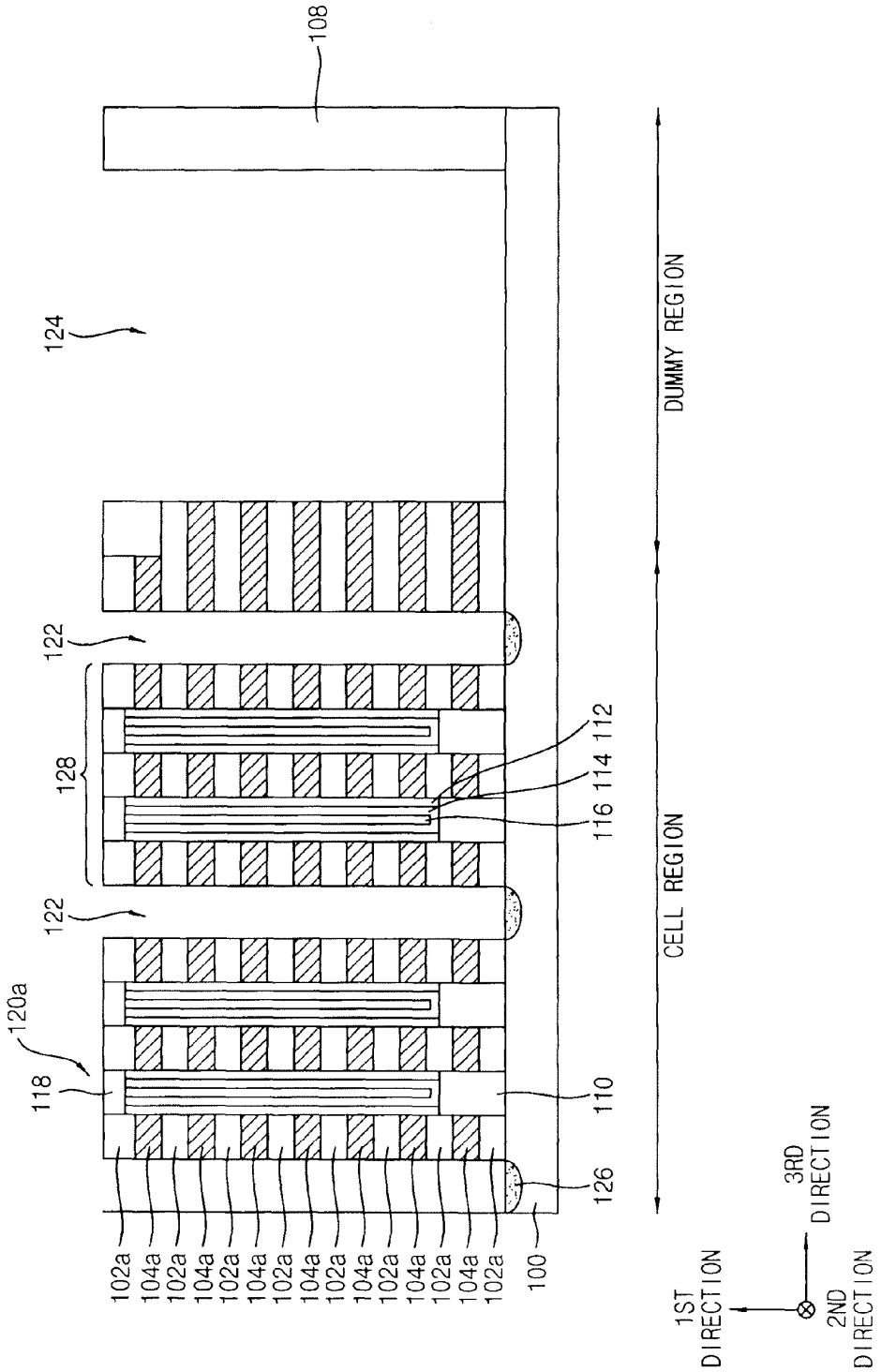
108
124
DUMMY REGION
122
128
112
114
116
122
CELL REGION
120a
118
110
126
102a
104a
100
1ST DIRECTION
2ND DIRECTION
3RD DIRECTION

FIG. 8

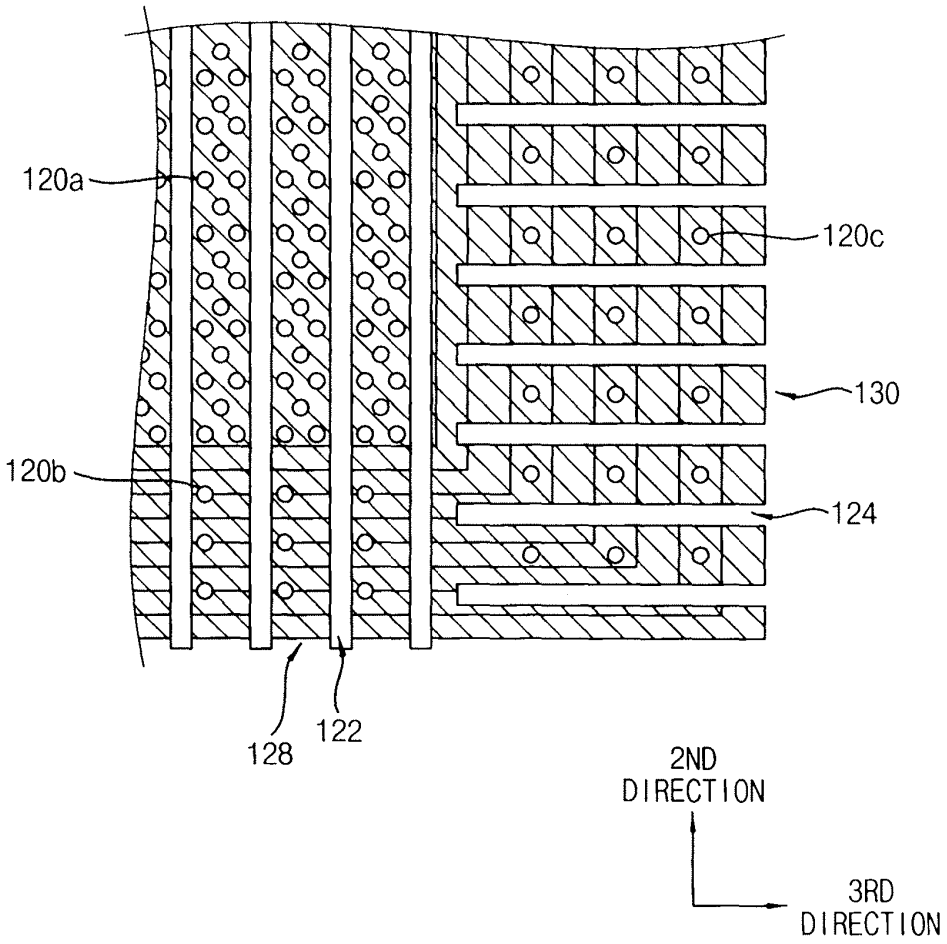

FIG. 9

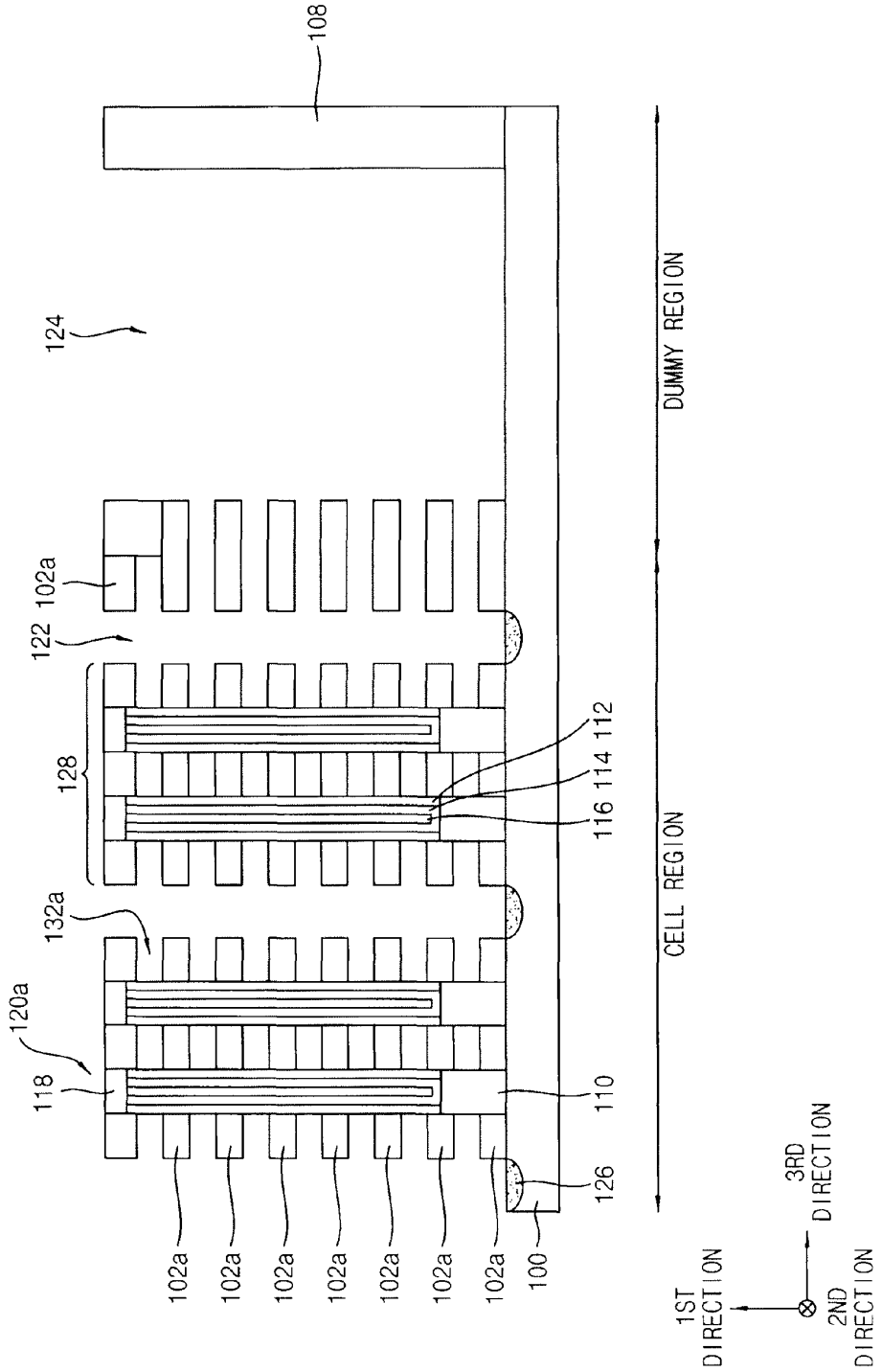
108
124
DUMMY REGION
102a
122
128
112
114
116
CELL REGION
132a
120a
118
110
126
102a
102a
102a
102a
102a
102a
102a
100
3RD DIRECTION
1ST DIRECTION
2ND DIRECTION

FIG. 10

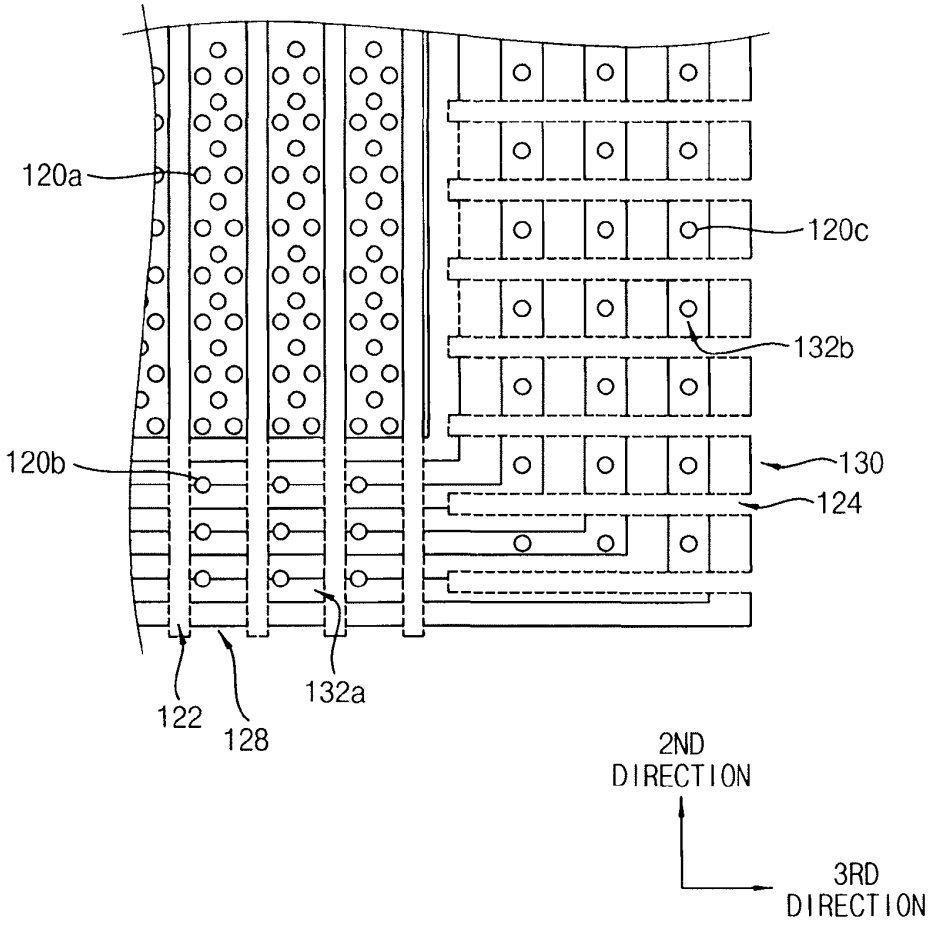
120a
120c
132b
120b
130
124
122
128
132a
2ND
DIRECTION
3RD
DIRECTION

FIG. 11

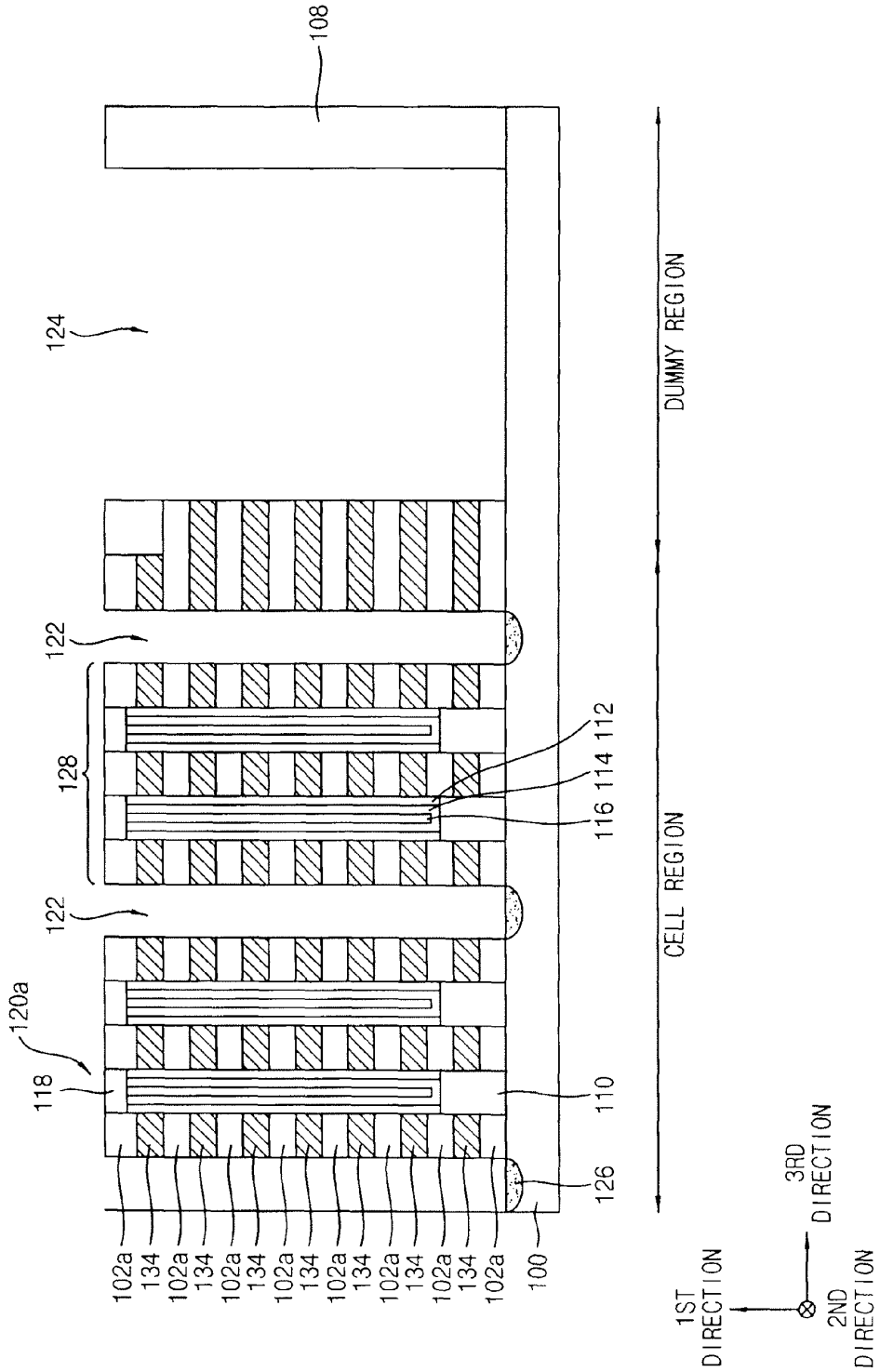
108
124
122
128
122
120a
118
102a
134
102a
134
102a
134
102a
134
102a
134
102a
134
102a
134
102a
100
126
110
116 114 112
DUMMY REGION
CELL REGION
1ST DIRECTION
2ND DIRECTION
3RD DIRECTION

FIG. 12

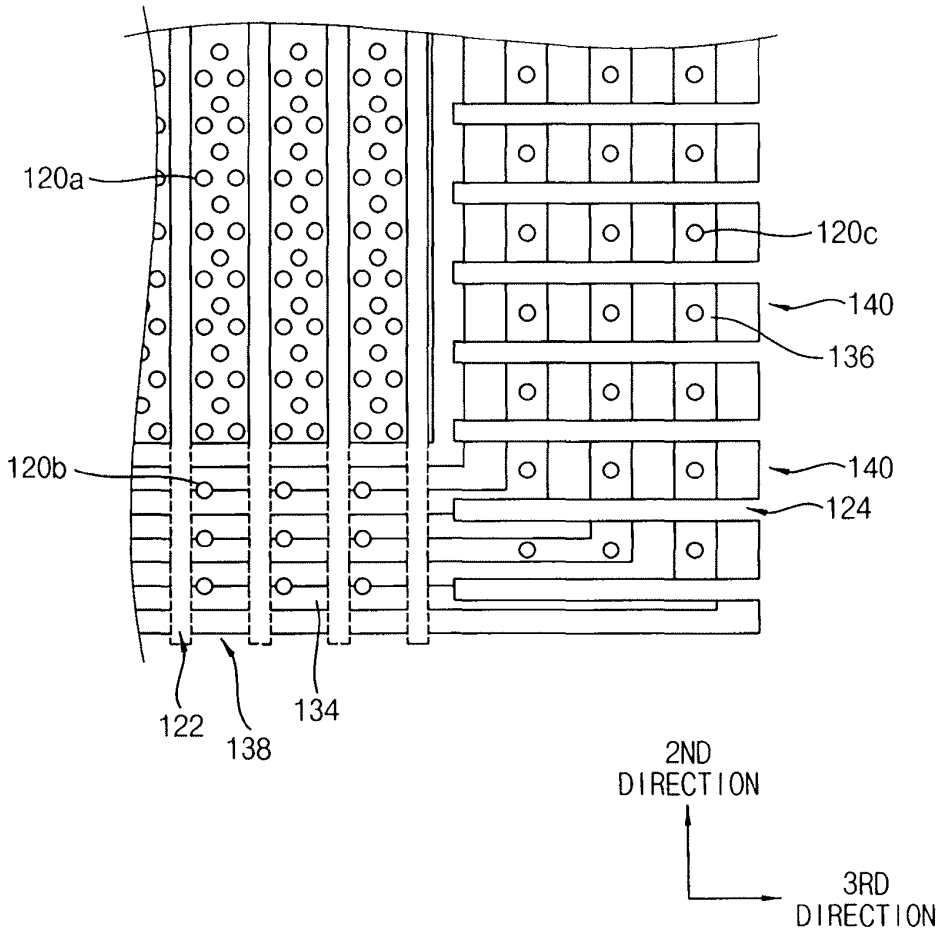
120a
120c
140
136
120b
140
124
122
138
134
2ND
DIRECTION
3RD
DIRECTION

FIG. 13

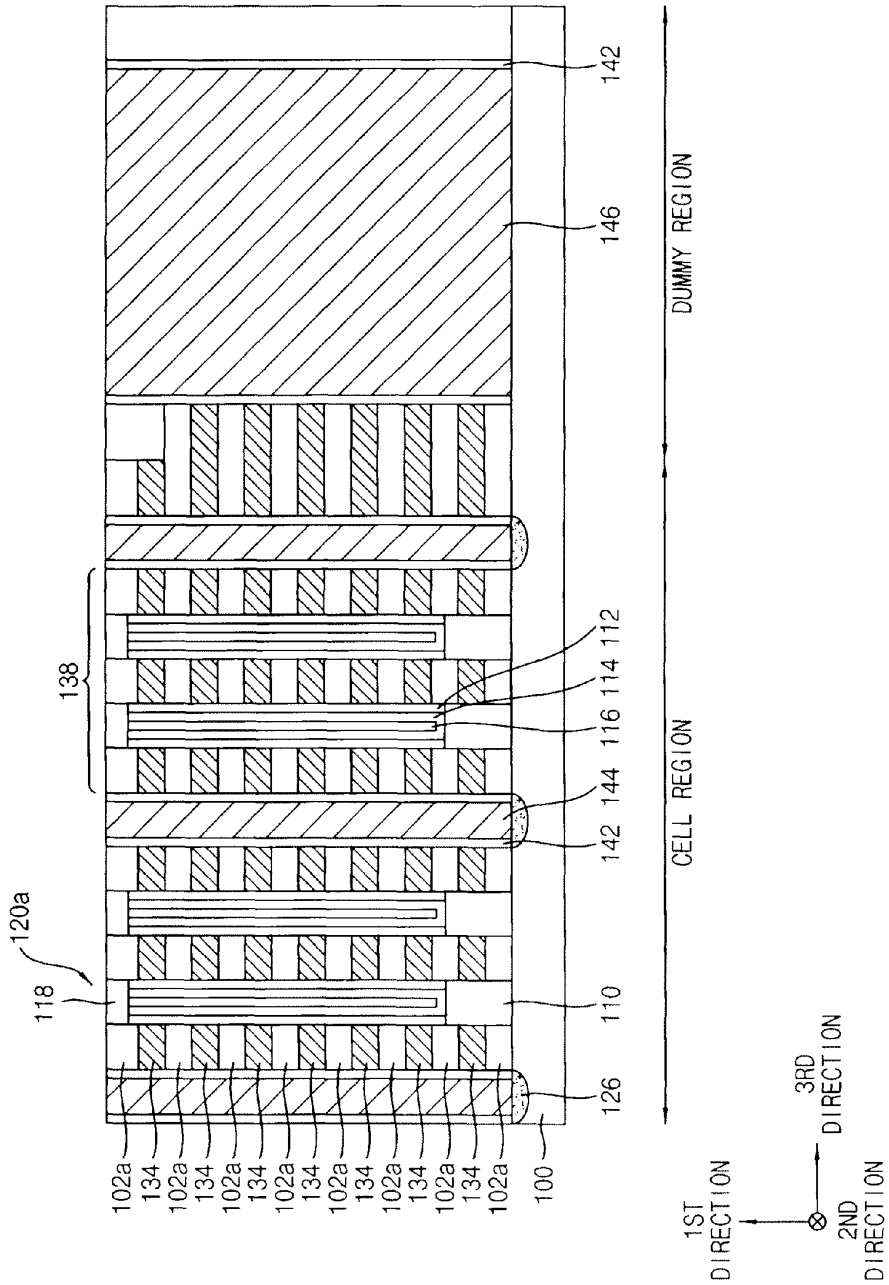
142
146
DUMMY REGION
138
112
114
116
144
142
CELL REGION
120a
118
110
126
102a
134
100
1ST DIRECTION
2ND DIRECTION
3RD DIRECTION

FIG. 14

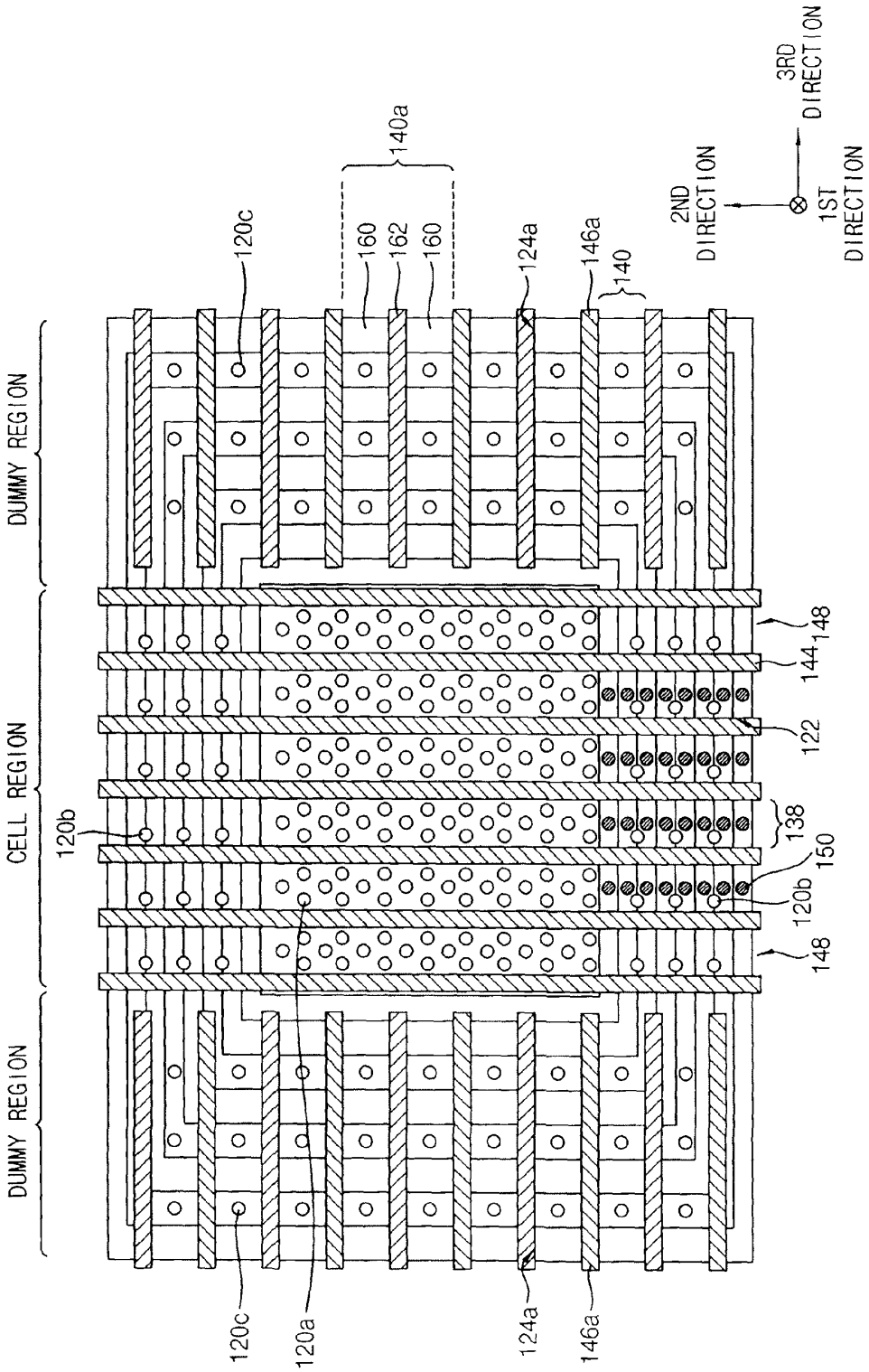
DUMMY REGION
CELL REGION
DUMMY REGION
120c
160
162
160
140a
124a
146a
140
2ND DIRECTION
1ST DIRECTION
3RD DIRECTION
148
144
122
138
150
120b
120b
148
120c
120a
124a
146a

FIG. 15

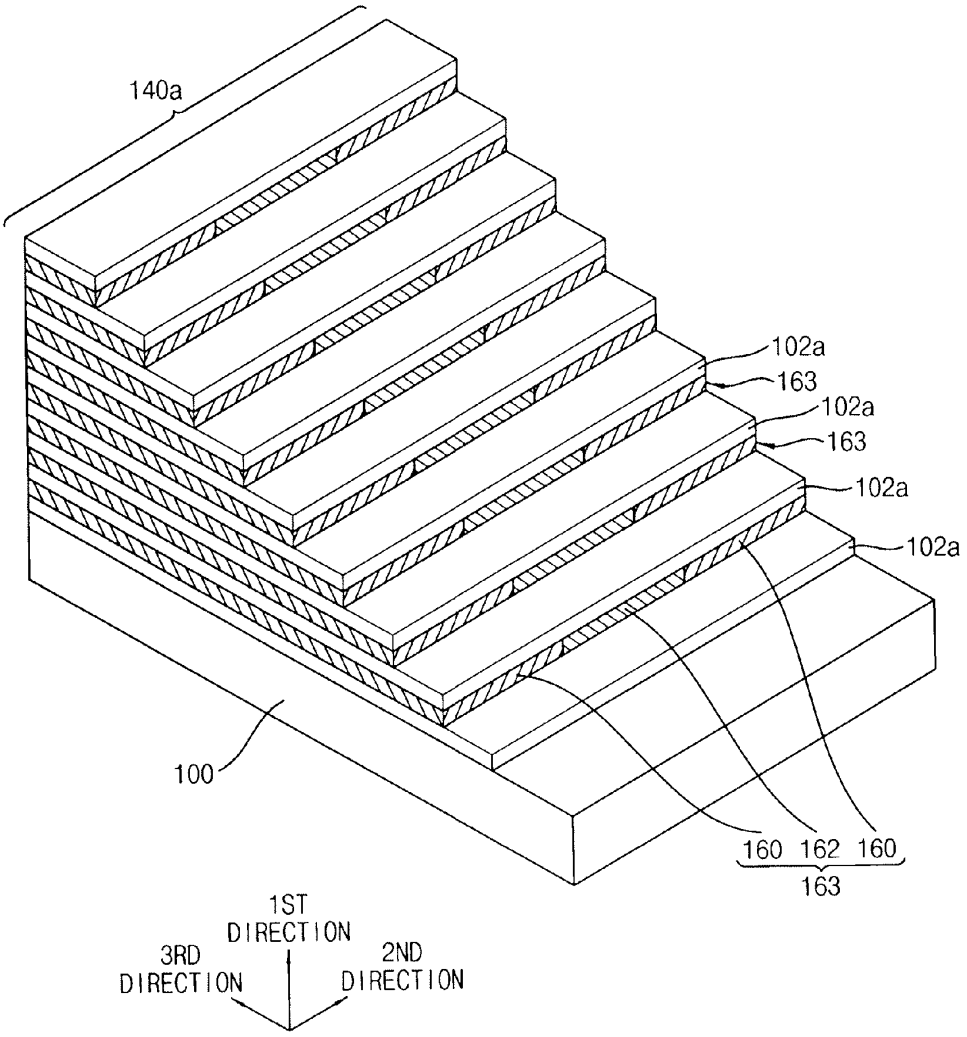
140a
102a
163
102a
163
102a
102a
100
160 162 160
163
1ST DIRECTION
3RD DIRECTION
2ND DIRECTION

FIG. 16

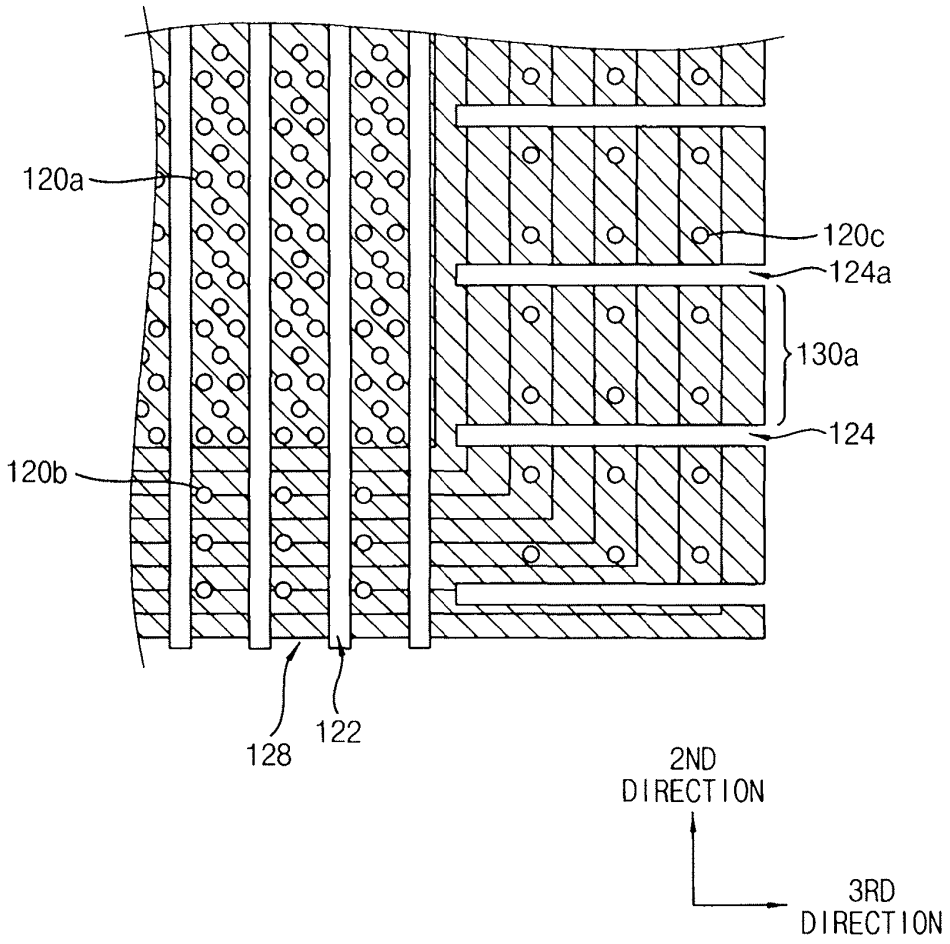
120a
120c
124a
130a
124
120b
128
122
2ND
DIRECTION
3RD
DIRECTION

FIG. 17

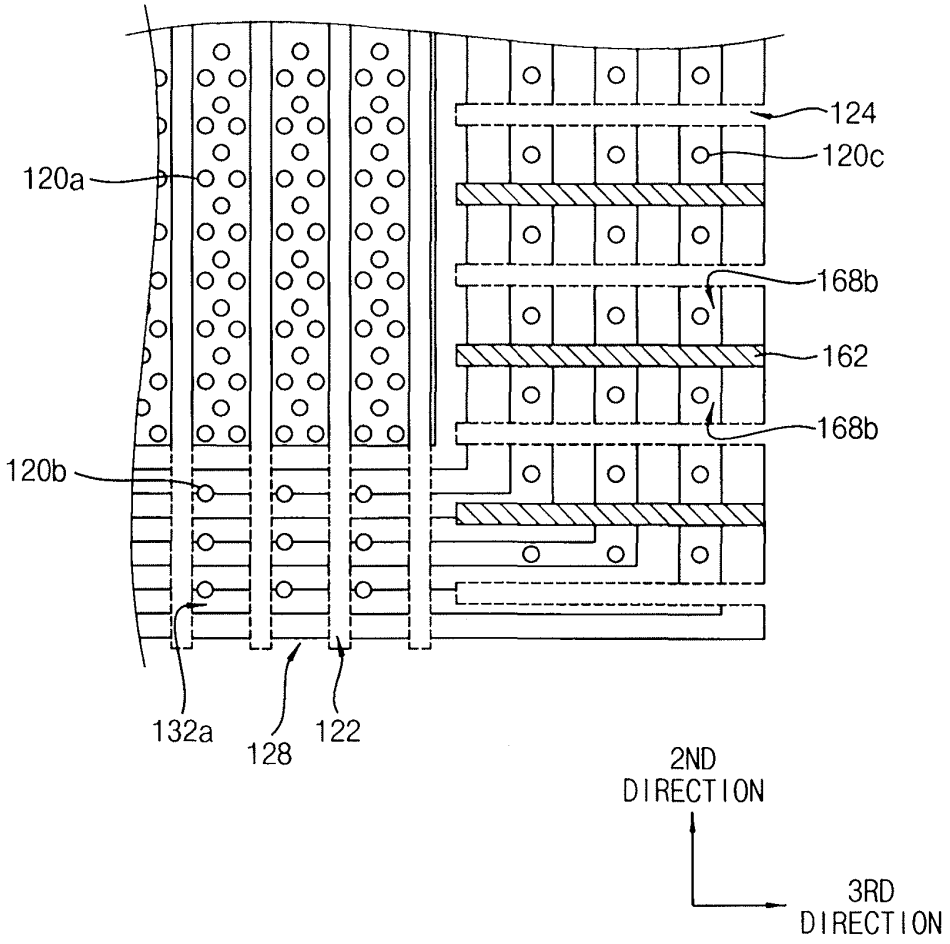
124
120c
120a
168b
162
168b
120b
132a
128
122
2ND
DIRECTION
3RD
DIRECTION

FIG. 18

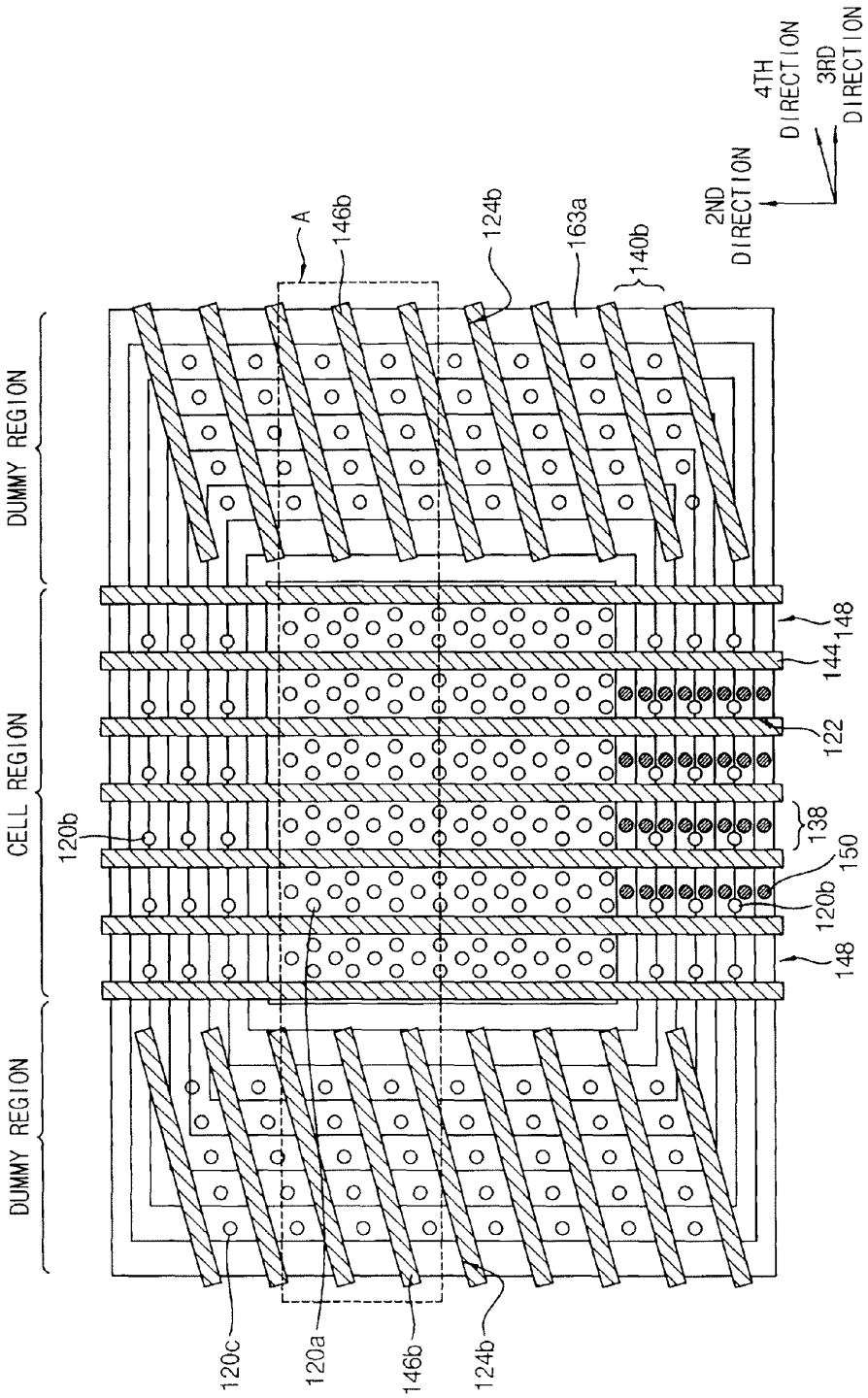
DUMMY REGION
CELL REGION
DUMMY REGION
A
146b
124b
163a
140b
2ND DIRECTION
4TH DIRECTION
3RD DIRECTION
148
144
122
138
150
120b
120b
148
120c
120a
146b
124b

FIG. 19

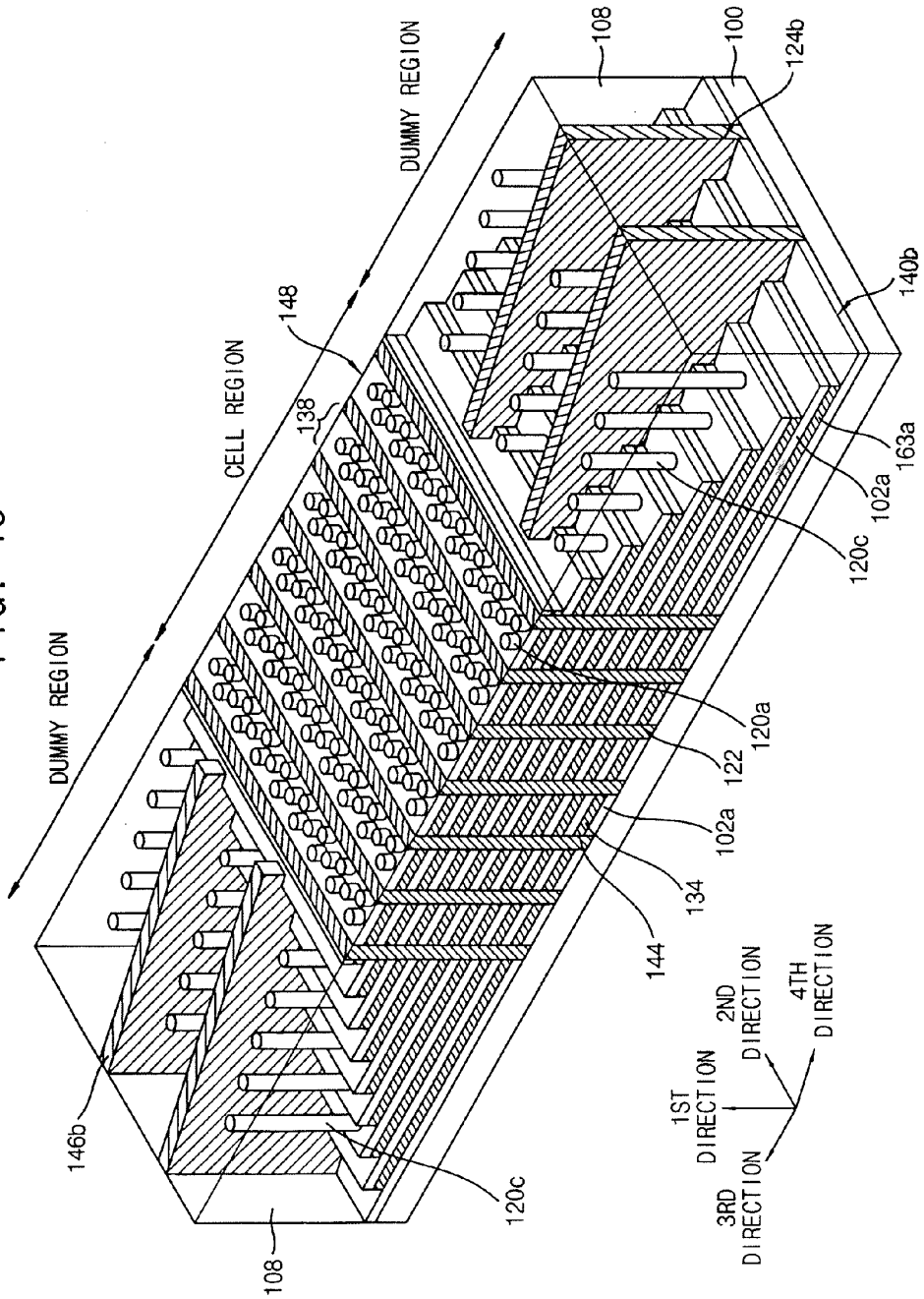
DUMMY REGION
CELL REGION
DUMMY REGION
148
138
108
100
124b
140b
163a
102a
120c
120a
122
102a
134
144
146b
120c
108
1ST DIRECTION
2ND DIRECTION
3RD DIRECTION
4TH DIRECTION

FIG. 20

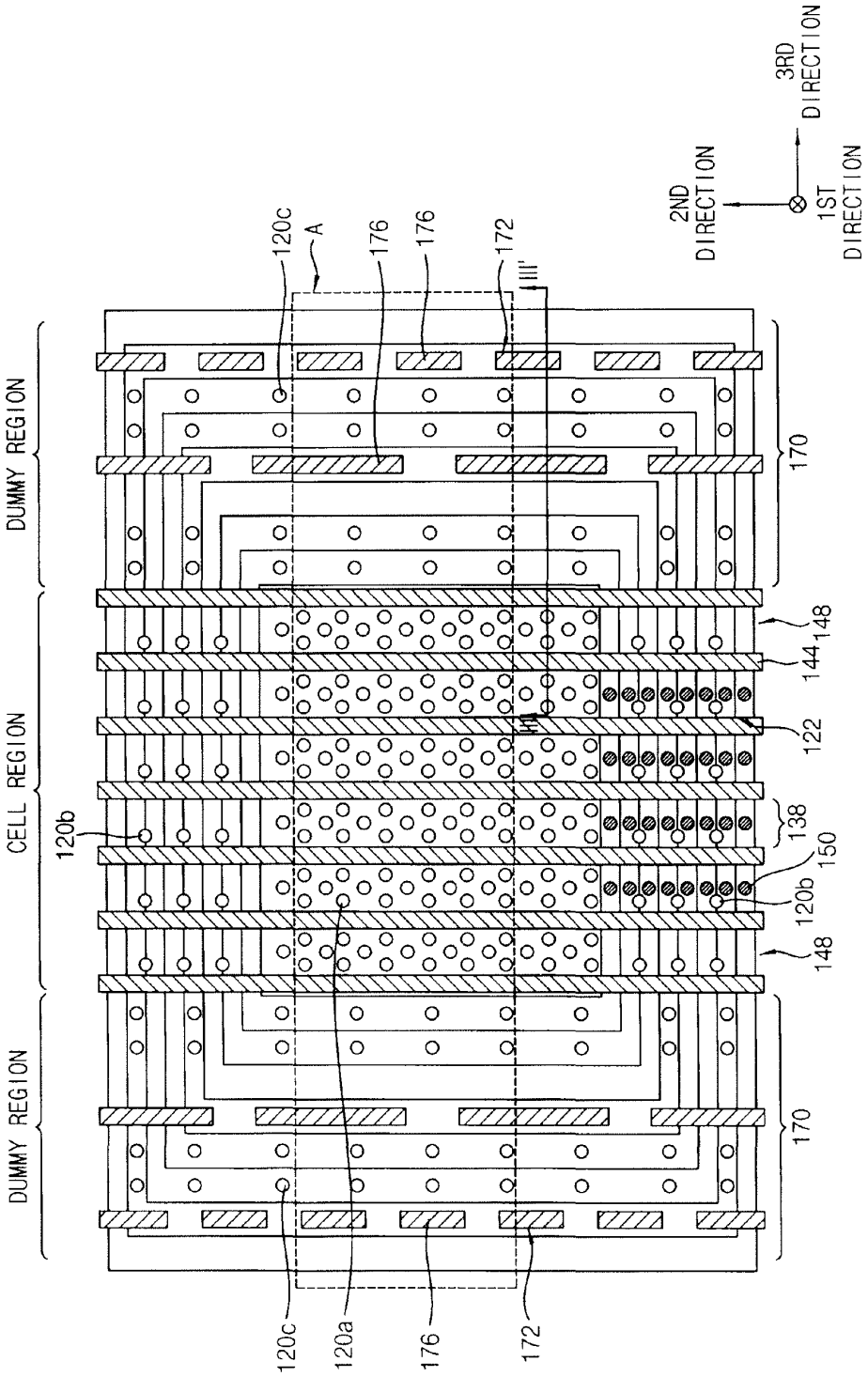
DUMMY REGION
CELL REGION
DUMMY REGION
120c
A
176
176
172
III'
120b
120c
120a
176
172
170
148
144
122
138
150
120b
148
170
2ND DIRECTION
1ST DIRECTION
3RD DIRECTION

FIG. 21

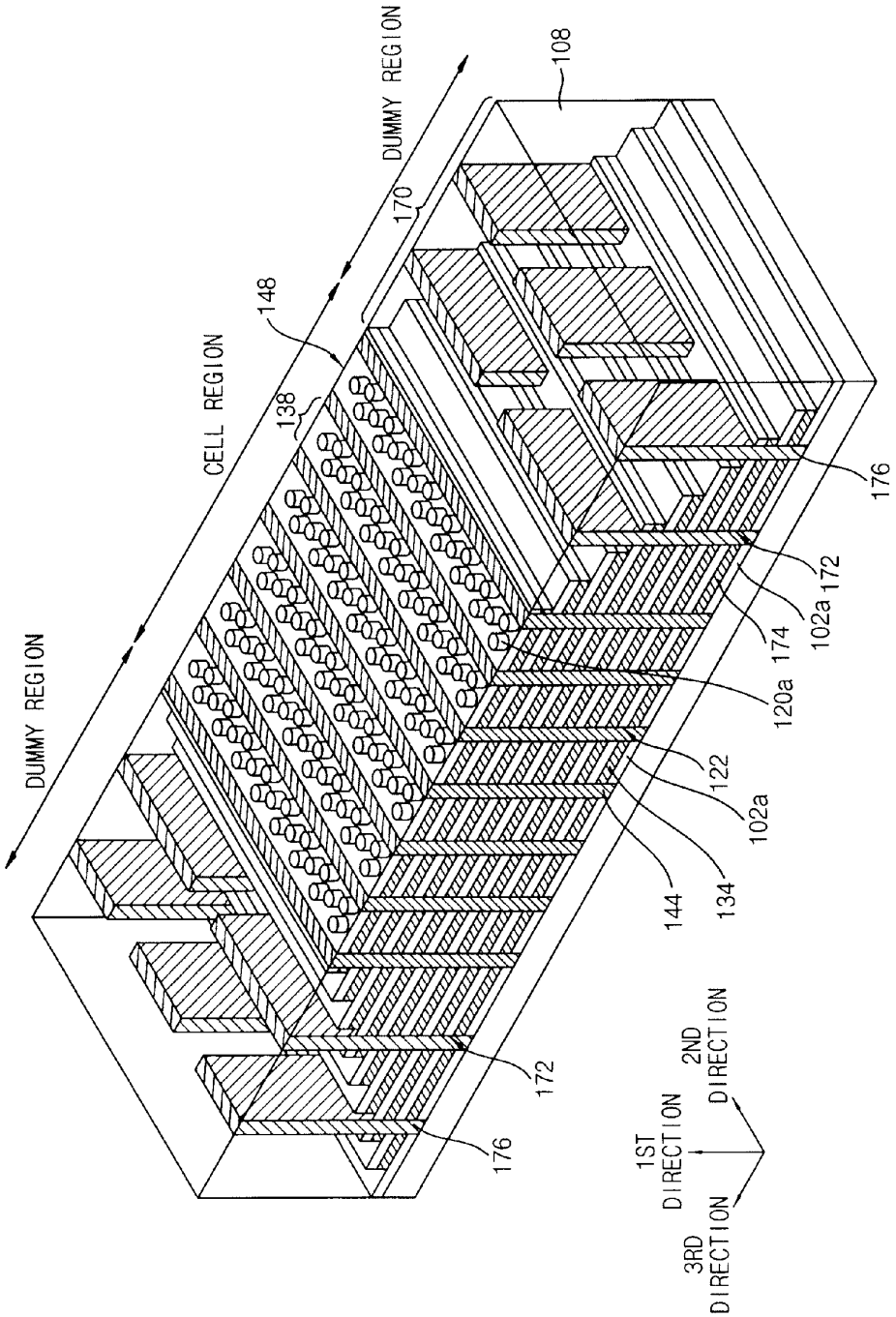
DUMMY REGION
CELL REGION
DUMMY REGION
148
138
170
108
176
172
174
102a
120a
122
102a
134
144
172
176
1ST DIRECTION
2ND DIRECTION
3RD DIRECTION

FIG. 22

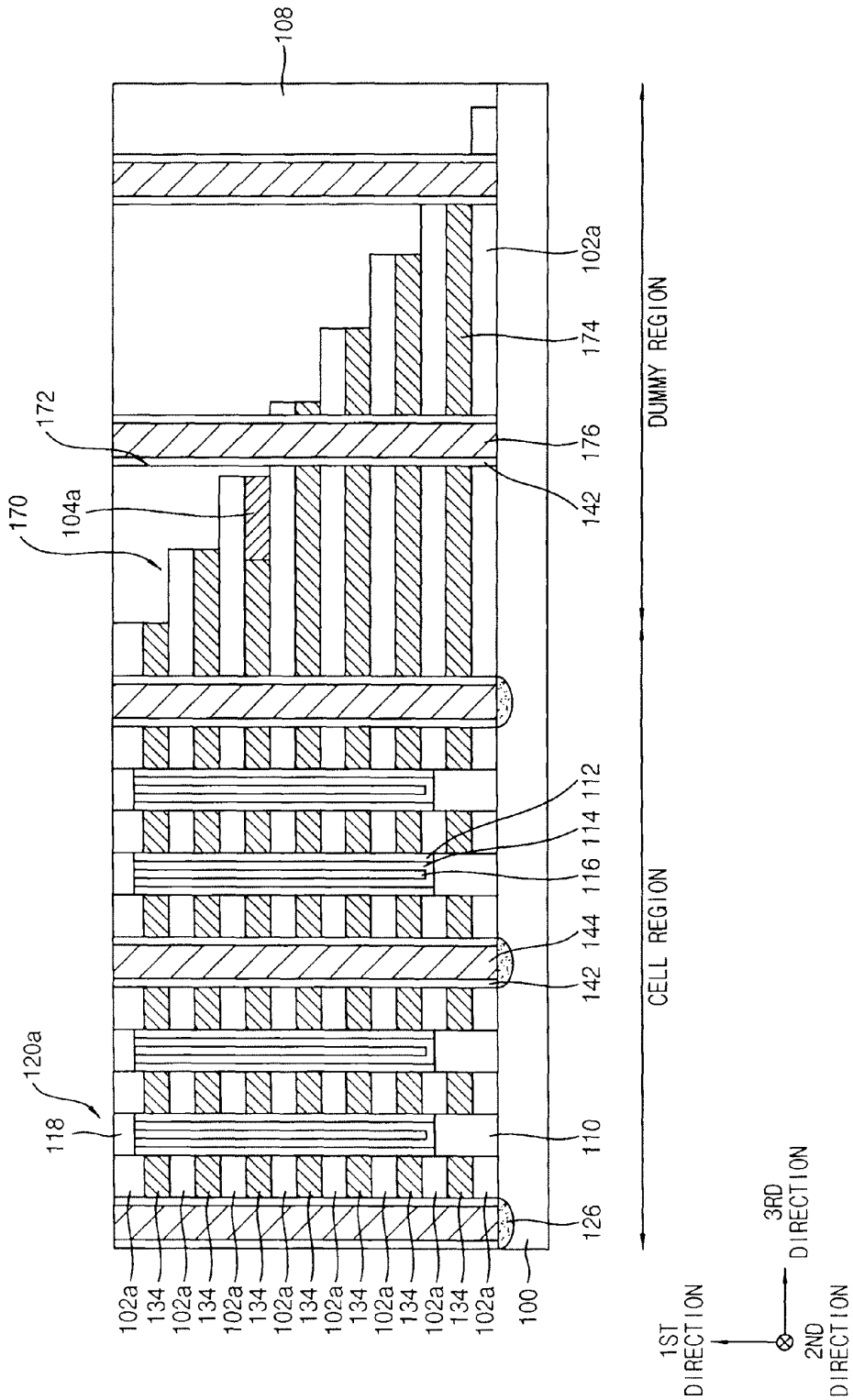
108
102a
174
DUMMY REGION
172
176
142
170
104a
112
114
116
144
142
CELL REGION
120a
118
110
126
102a
134
102a
134
102a
134
102a
134
102a
134
102a
134
102a
134
102a
100
1ST DIRECTION
2ND DIRECTION
3RD DIRECTION

FIG. 23

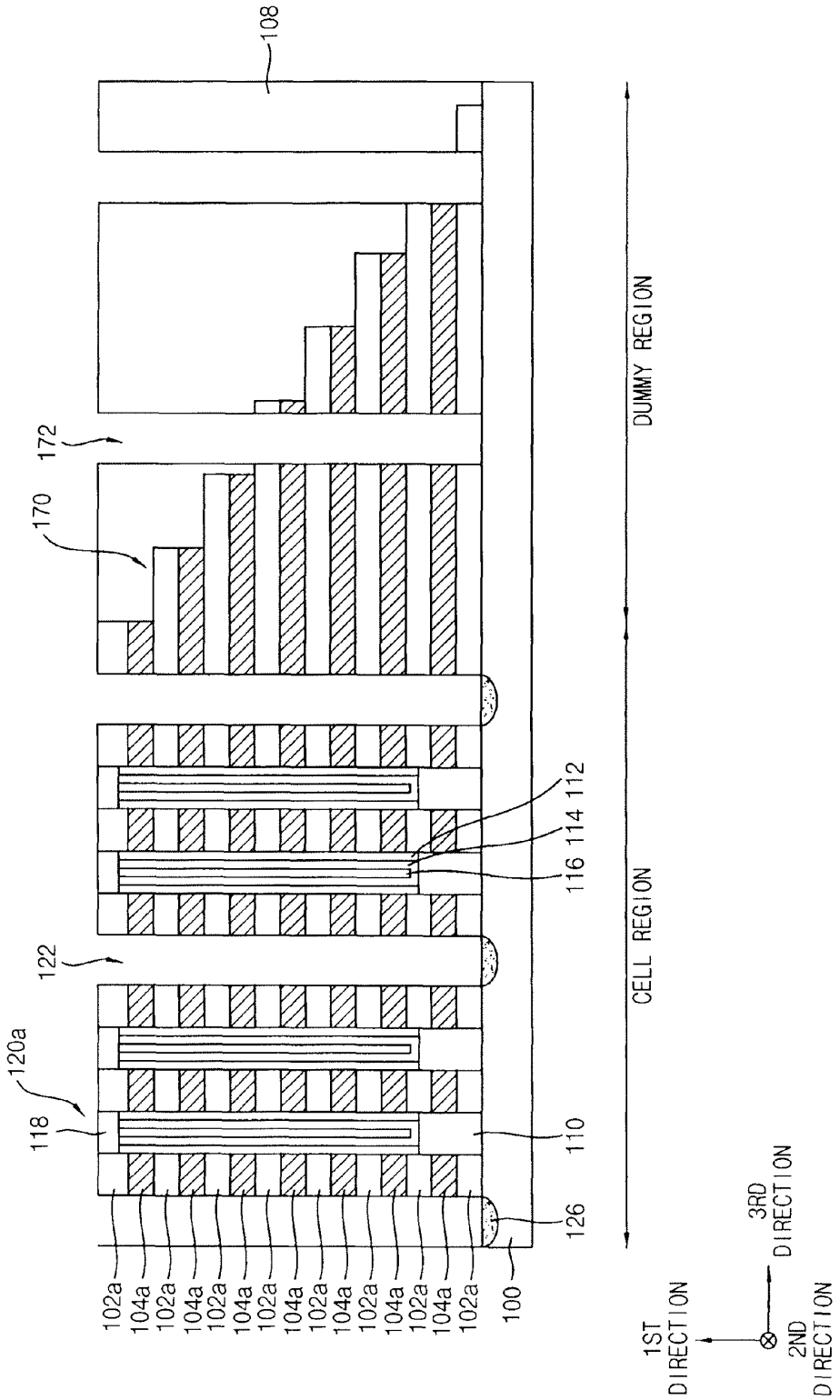
108
172
170
122
120a
118
102a
104a
100
126
110
116 114 112
DUMMY REGION
CELL REGION
1ST DIRECTION
2ND DIRECTION
3RD DIRECTION

FIG. 24

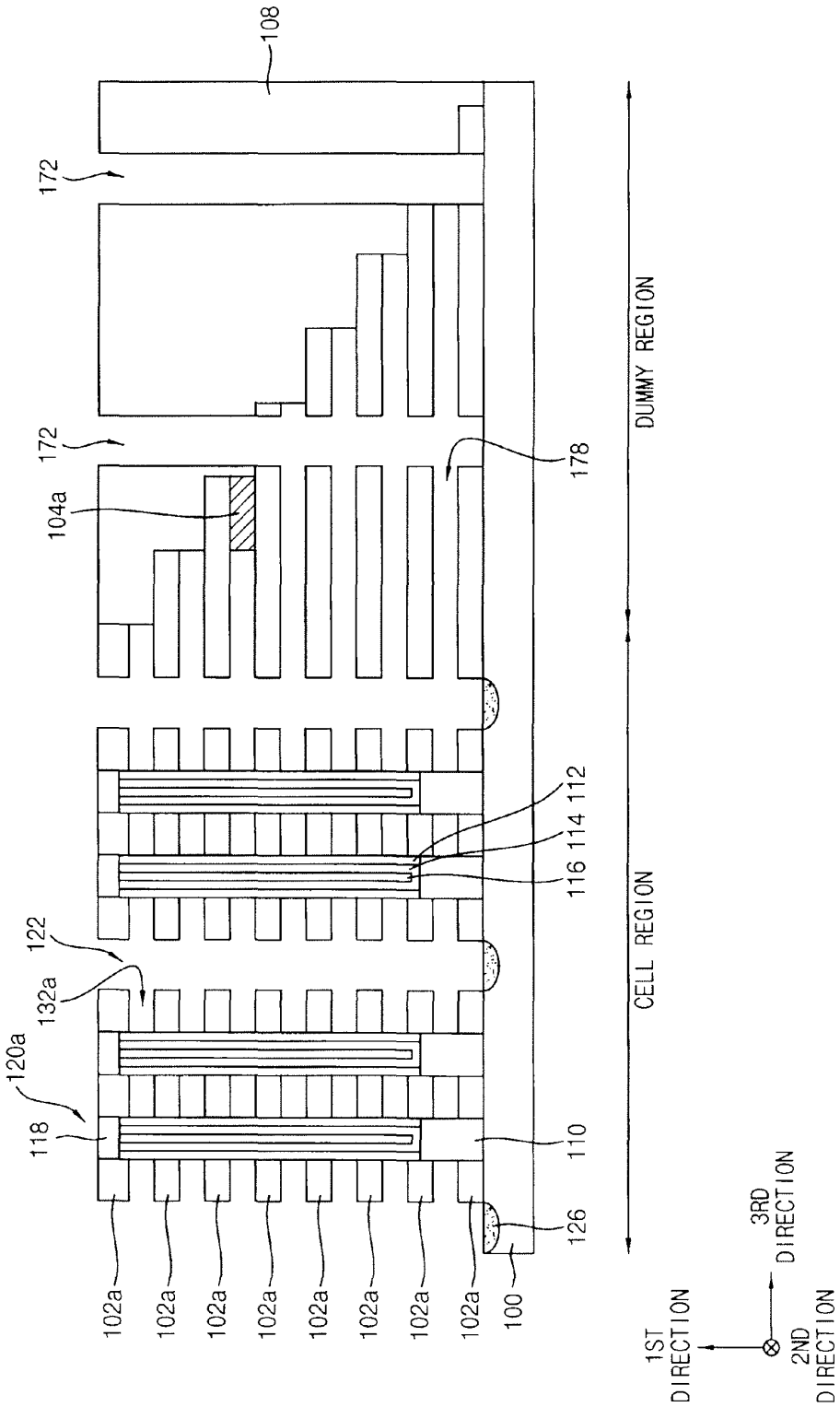
108
172
172
104a
178
DUMMY REGION
112
114
116
CELL REGION
122
132a
120a
118
110
126
102a
100
1ST DIRECTION
2ND DIRECTION
3RD DIRECTION

FIG. 25

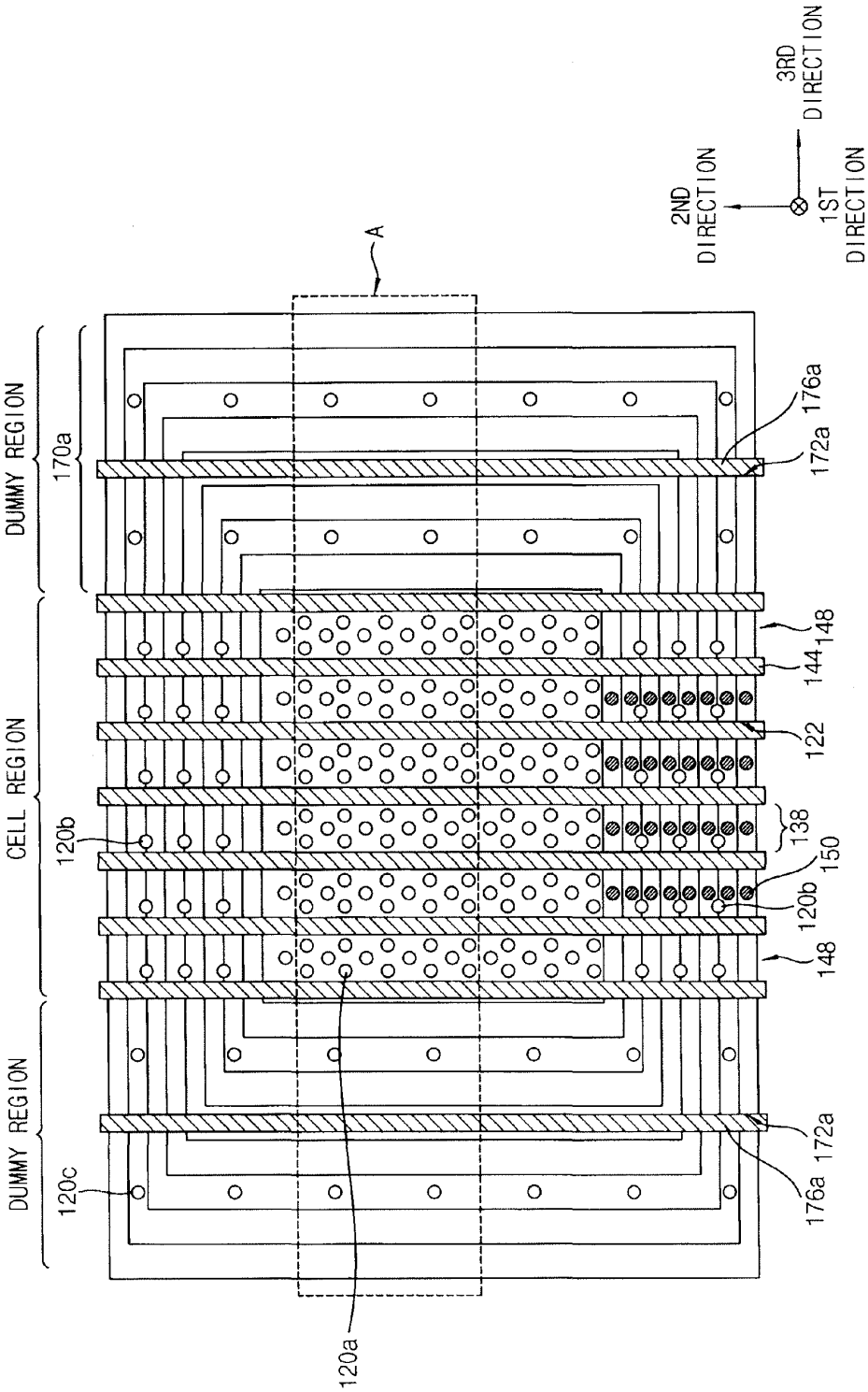
DUMMY REGION
170a
CELL REGION
DUMMY REGION
120c
120b
120a
A
176a
172a
148
144
122
138
150
120b
148
172a
176a
2ND DIRECTION
3RD DIRECTION
1ST DIRECTION

FIG. 26

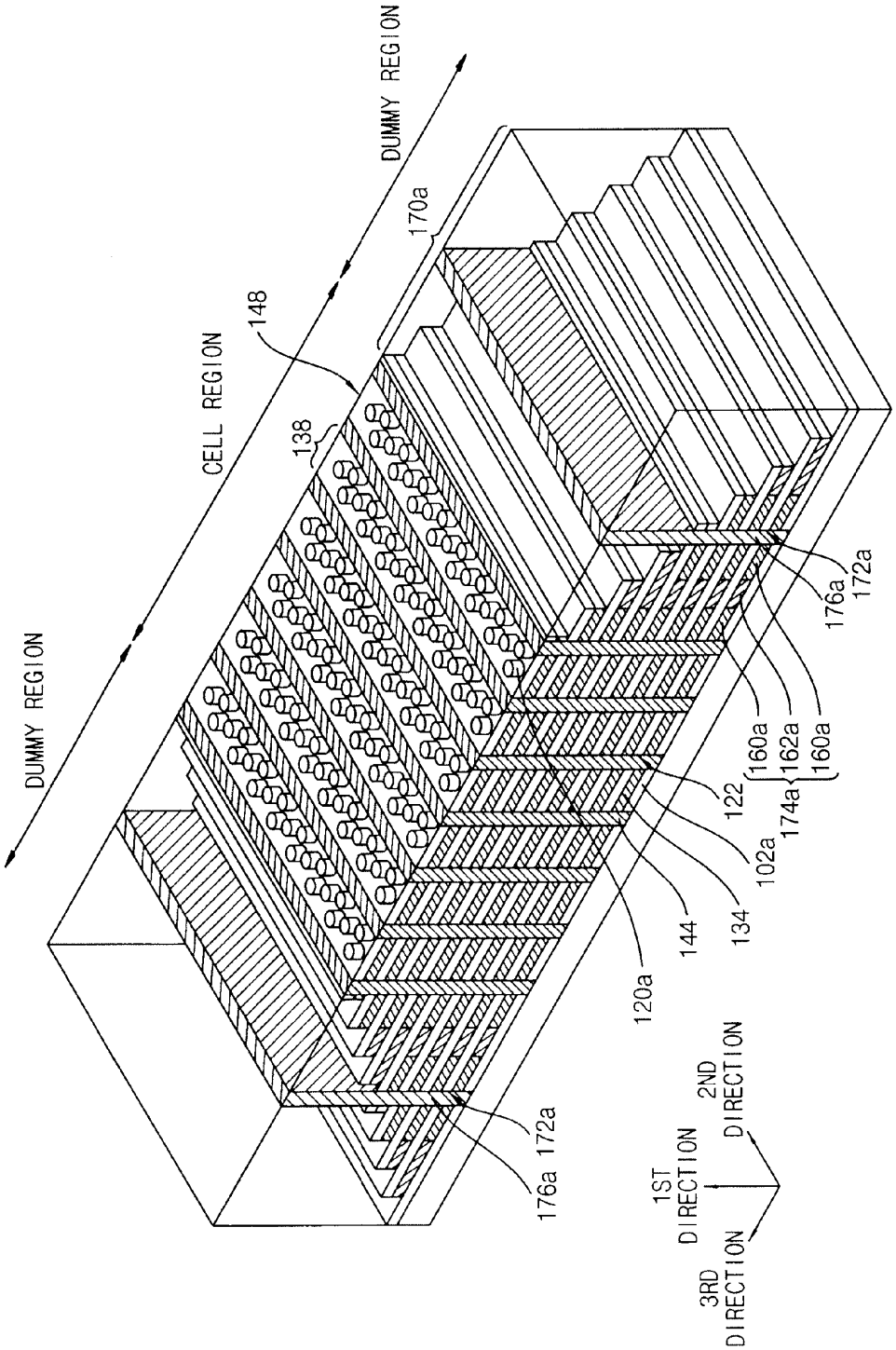
DUMMY REGION
CELL REGION
DUMMY REGION
148
138
170a
176a
172a
176a
172a
160a
162a
160a
174a
122
102a
144
134
120a
1ST DIRECTION
2ND DIRECTION
3RD DIRECTION

FIG. 27

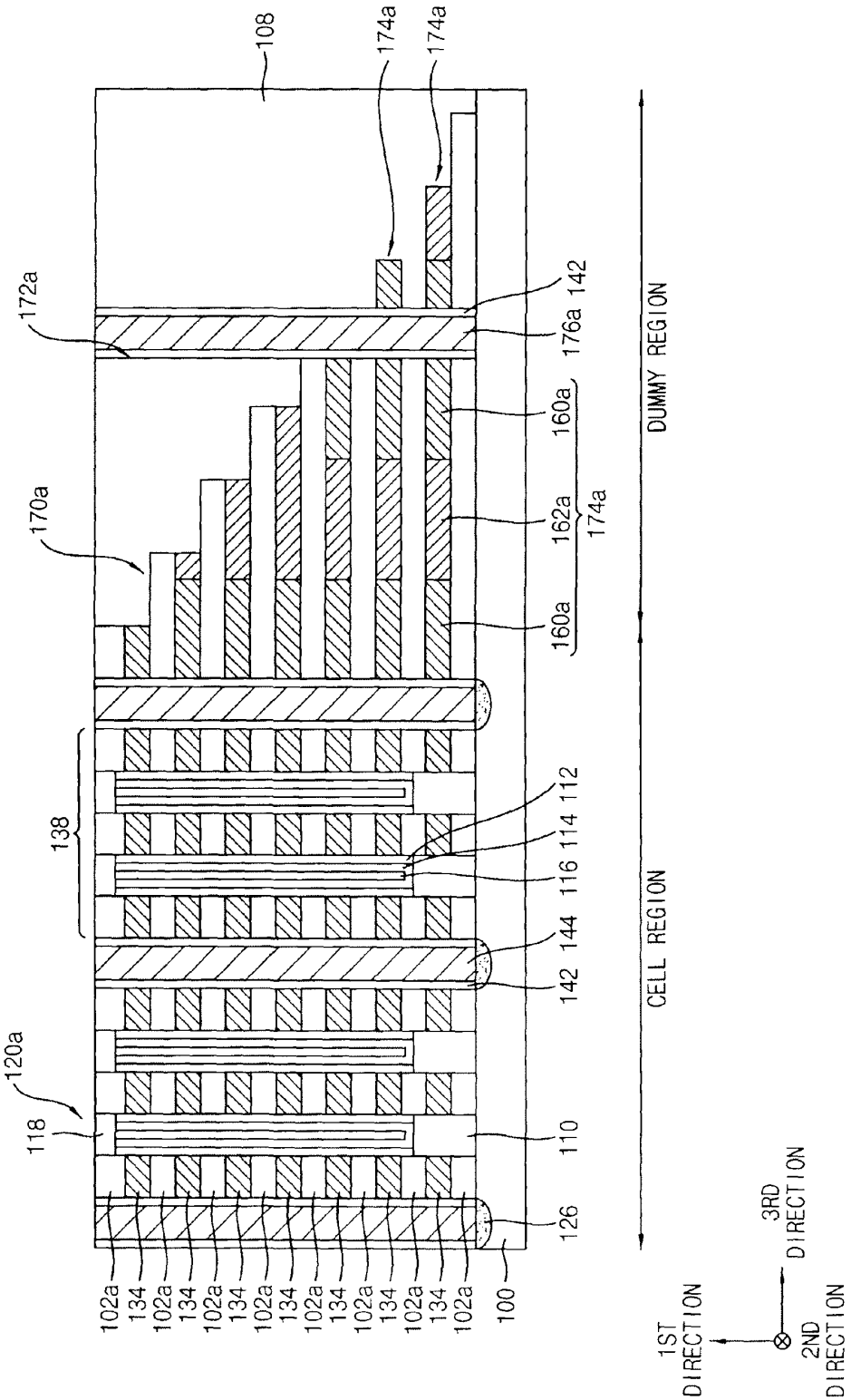
108
174a
174a
172a
142
176a
160a
DUMMY REGION
170a
162a
174a
160a
138
112
114
116
144
142
CELL REGION
120a
118
110
126
102a
134
100
1ST DIRECTION
2ND DIRECTION
3RD DIRECTION

FIG. 28

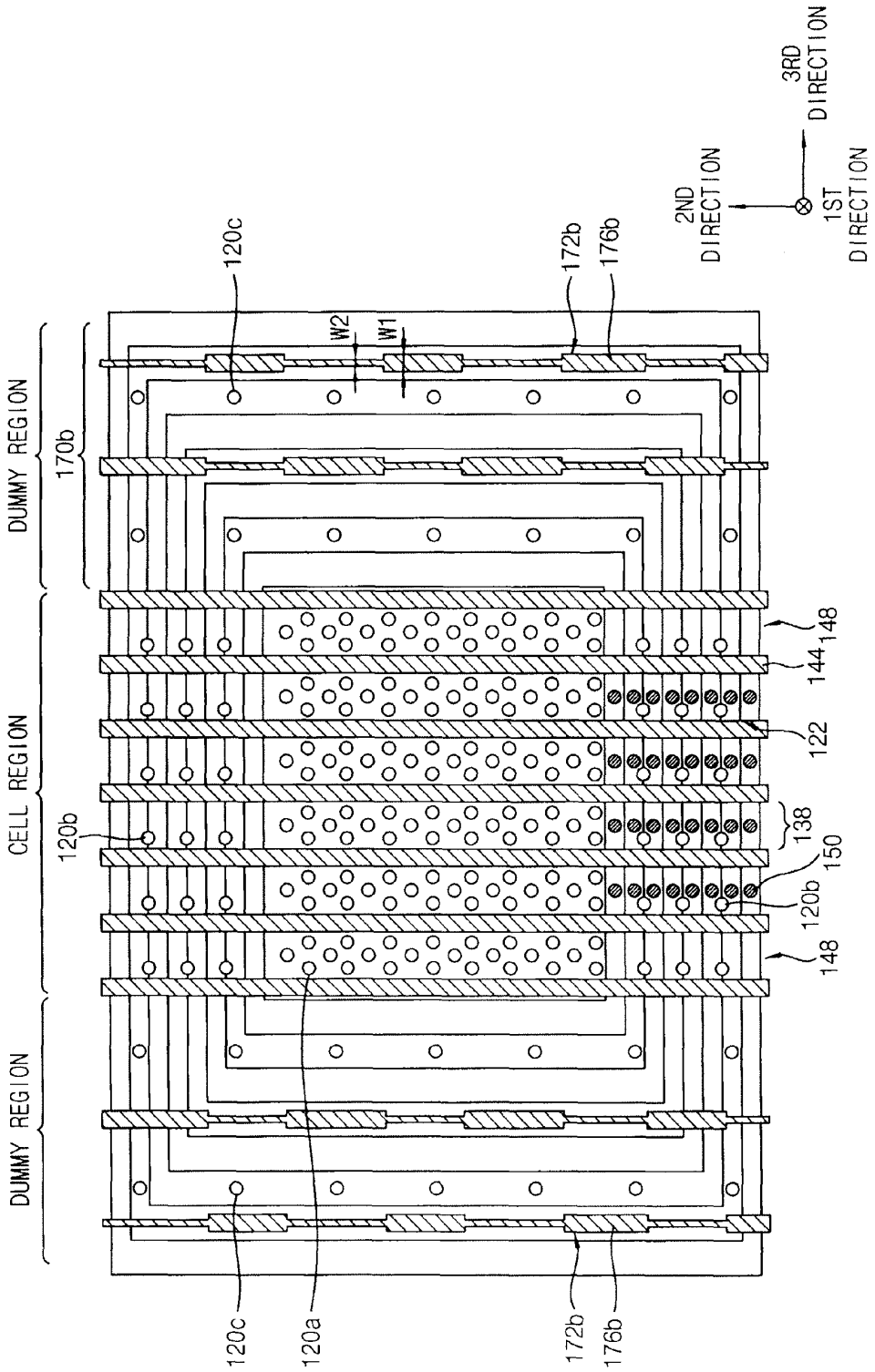
DUMMY REGION
CELL REGION
DUMMY REGION
170b
120c
W2
W1
172b
176b
2ND DIRECTION
3RD DIRECTION
1ST DIRECTION
148
144
122
138
150
120b
120b
148
120c
120a
172b
176b

FIG. 29

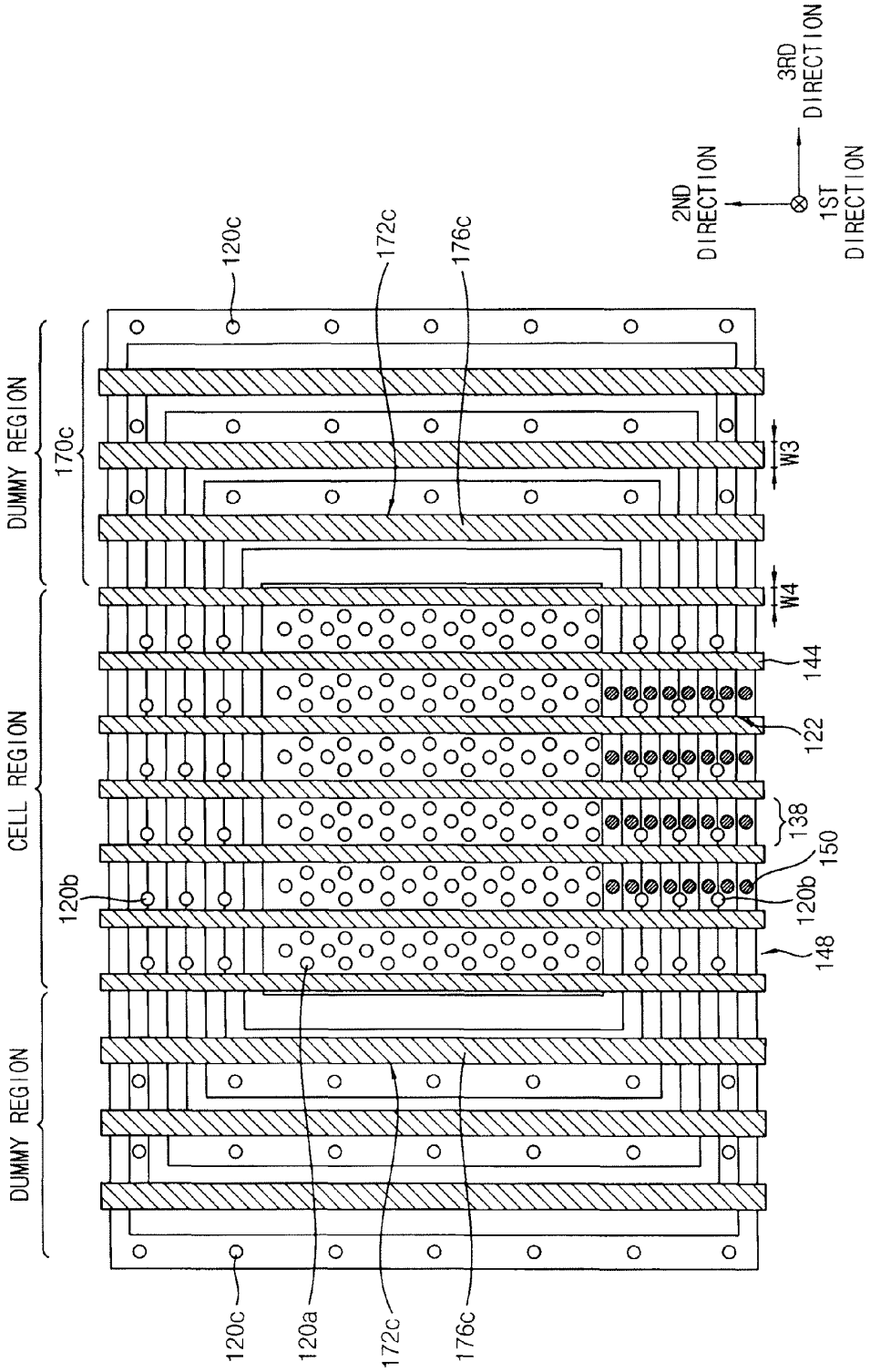
DUMMY REGION
CELL REGION
DUMMY REGION
170c
120c
172c
176c
120b
120a
W3
W4
144
122
138
150
148
3RD DIRECTION
2ND DIRECTION
1ST DIRECTION

FIG. 30

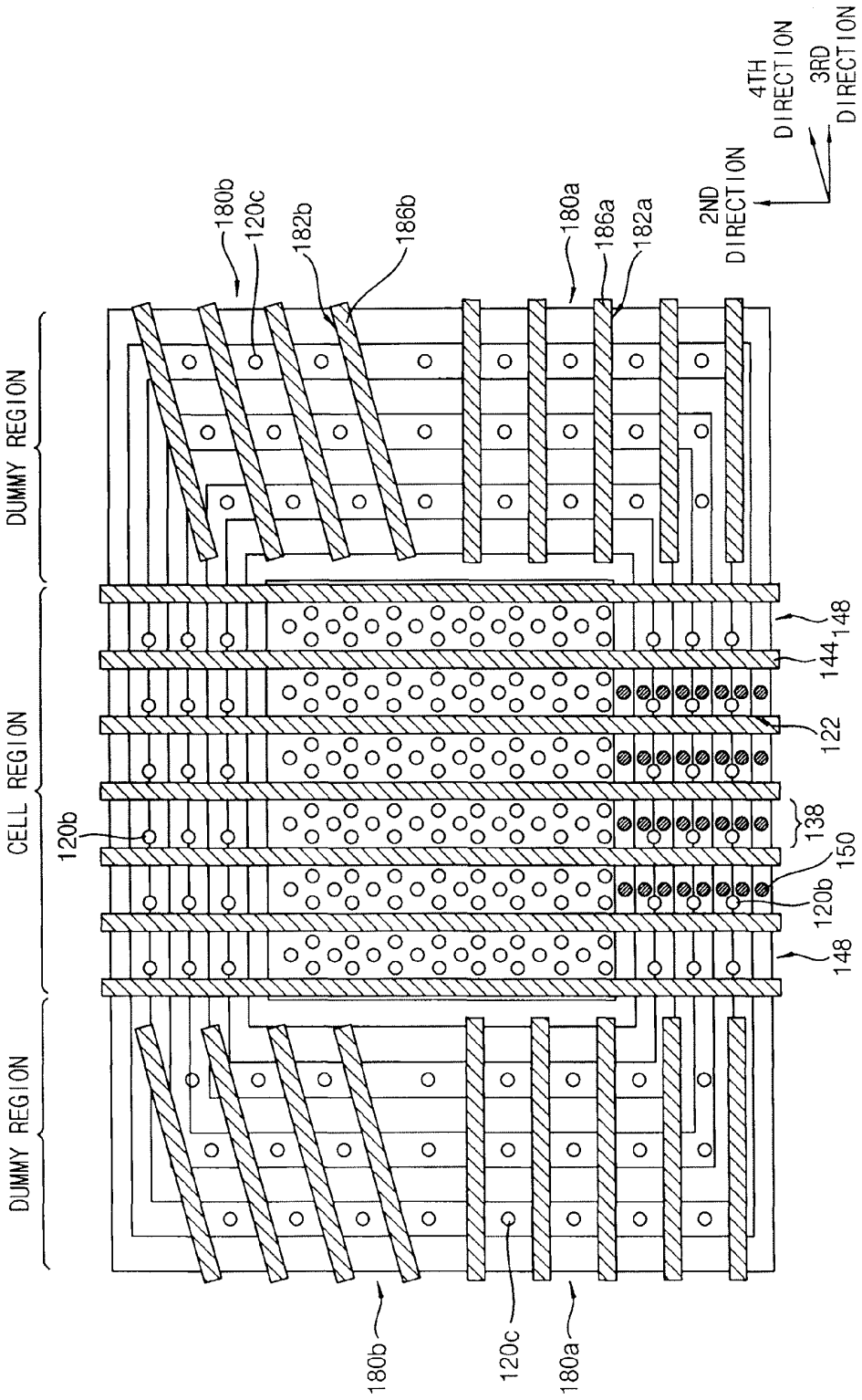
DUMMY REGION
CELL REGION
DUMMY REGION
180b
120c
182b
186b
180a
186a
182a
2ND DIRECTION
4TH DIRECTION
3RD DIRECTION
148
144
122
138
150
120b
120b
148
180b
120c
180a

FIG. 31

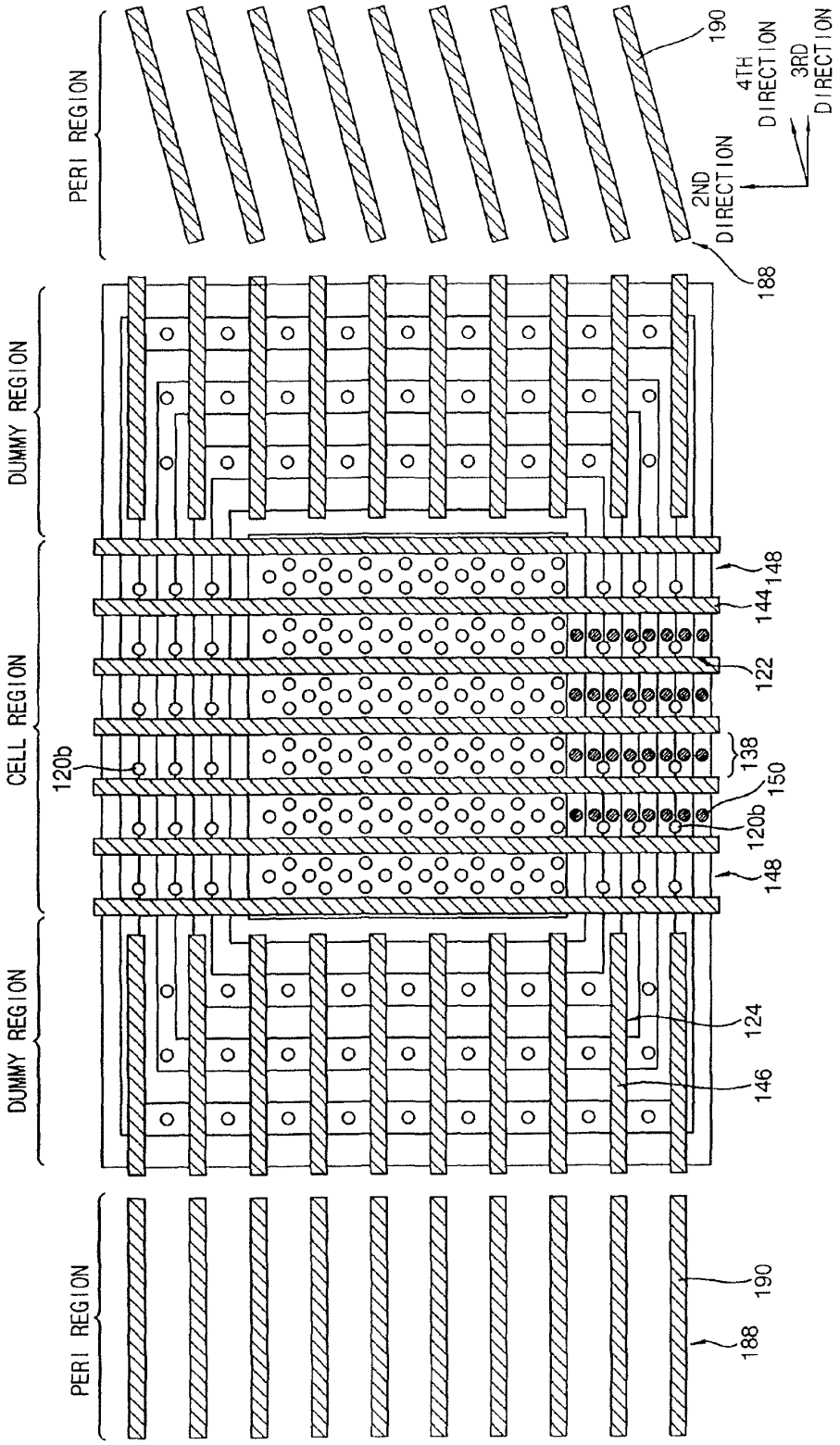
PERI REGION
DUMMY REGION
CELL REGION
DUMMY REGION
PERI REGION
190
188
2ND DIRECTION
4TH DIRECTION
3RD DIRECTION
148
144
122
138
150
120b
120b
148
124
146
190
188

SEMICONDUCTOR DEVICES AND METHODS OF MANUFACTURING THE SAME

CROSS-REFERENCE TO RELATED APPLICATION

This U.S. Non-Provisional application claims priority under 35 USC §119 to U.S. Provisional Application No. 62/130,868, filed on Mar. 10, 2015 in the USPTO.

Korean Patent Application Nos. 10-2015-0033128, filed on Mar. 10, 2015, and 10-2015-0068931, filed on May 18, 2015, in the Korean Intellectual Property Office, and entitled: "Semiconductor Devices and Methods of Manufacturing the Same," are incorporated by reference herein in its entirety.

BACKGROUND

1. Field

Example embodiments relate to semiconductor devices and methods of manufacturing the same. More particularly, example embodiments relate to semiconductor devices including vertical channels and methods of manufacturing the same.

2. Description of the Related Art

Recently, a vertical memory device including a plurality of memory cells stacked vertically from a surface of a substrate has been developed. In the vertical memory device, a high stress may be imposed on vertically stacked layers because the memory cells may be repeatedly stacked vertically. Thus, structural and/or electrical defects may be caused in the vertical memory device.

SUMMARY

Example embodiments provide a semiconductor device having improved structural and electrical reliability.

According to example embodiments, a semiconductor device includes a substrate, first channel structures, gate lines, cutting lines, dummy patterns and dummy lines. The substrate may include a cell region and a dummy region. The first channel structures may be disposed on the cell region of the substrate. The first channel structures may extend in a first direction vertical to a top surface of the substrate. The gate lines may surround outer sidewalls of the first channel structures and extend in a second direction parallel to the top surface of the substrate. The gate lines may be spaced apart from each other along the first direction. The cutting lines may be interposed between the gate lines on the cell region. The cutting lines may extend in the second direction. The dummy patterns may be spaced apart from each other along the first direction on the dummy region. The dummy patterns may have a stepped shape along a third direction parallel to the top surface of the substrate and perpendicular to the second direction. At least a portion of the dummy patterns may include a conductive material the same as that included in the gate lines. The dummy lines may extend through the dummy patterns.

In example embodiments, the dummy region may be adjacent to an end portion of the cell region in the third direction.

In example embodiments, the dummy lines may include a conductive material the same as that included in the cutting lines.

In example embodiments, the dummy lines may extend in the third direction.

In example embodiments, a distance between the dummy lines may be equal to or greater than a distance between the cutting lines.

In example embodiments, at least one of the dummy patterns may include conductive patterns spaced apart in the second direction, and a sacrificial pattern interposed between the conductive patterns. The conductive patterns may include the conductive material the same as that of the gate lines, and the sacrificial pattern may include a nitride.

In example embodiments, the dummy lines may extend in a fourth direction diagonal to the second direction.

In example embodiments, the dummy lines may extend in the second direction.

In example embodiments, at least a portion of the dummy patterns may include the conductive material the same as that of the gate lines, and a remaining portion of the dummy patterns may include a conductive pattern and a sacrificial pattern. The conductive pattern may include the conductive material and the sacrificial pattern may include a nitride.

In example embodiments, the dummy patterns may be positioned at corresponding levels of the gate lines.

In example embodiments, the semiconductor device may further include insulating interlayer patterns between the dummy patterns neighboring in the first direction and between the gate lines neighboring in the first direction.

In example embodiments, the cutting lines may serve as common source lines, and the dummy lines may serve as dummy source lines.

In example embodiments, each of the dummy lines may have a uniform width or include different widths.

In example embodiments, the semiconductor device may further include a third channel structure extending through the dummy patterns on the dummy region of the substrate.

In example embodiments, the semiconductor device may further include a dummy cell on a portion of the cell region adjacent to the dummy region.

According to other example embodiments, a semiconductor device includes a substrate, first channel structures, gate lines, first insulating interlayer patterns, cutting lines, dummy patterns, second insulating interlayer patterns, dummy lines. The substrate may include a cell region and a dummy region. The first channel structures may be disposed on the cell region of the substrate. The first channel structures may extend in a first direction vertical to a top surface of the substrate. The gate lines may surround outer sidewalls of the first channel structures and extend in a second direction parallel to the top surface of the substrate. The gate lines may be spaced apart from each other along the first direction. The first insulating interlayer patterns may be interposed between the gate lines neighboring in the first direction. The cutting lines may be interposed between the gate lines on the cell region. The cutting lines may extend in the second direction. The dummy patterns may be spaced apart from each other along the first direction on the dummy region. The dummy patterns may have a stepped shape along a third direction parallel to the top surface of the substrate and perpendicular to the second direction. At least a portion of the dummy patterns may include a conductive material the same as that included in the gate lines. The second insulating interlayer patterns may be interposed between the dummy patterns neighboring in the first direction. The dummy lines may extend through the dummy patterns and the second insulating interlayer patterns.

According to yet other example embodiments, a semiconductor device includes a substrate including a cell region and a dummy region, first channel structures on the cell region of the substrate, the first channel structures extending

in a first direction vertical with respect to a top surface of the substrate, gate lines surrounding outer sidewalls of the first channel structures and extending in a second direction parallel to the top surface of the substrate, the gate lines being spaced apart from each other along the first direction, common source lines between the gate lines on the cell region, the common source lines extending in the second direction, dummy patterns spaced apart from each other along the first direction on the dummy region, the dummy patterns having a stepped shape along a third direction parallel to the top surface of the substrate and perpendicular to the second direction, at least a portion of the dummy patterns including a same conductive material as that included in the gate lines, and dummy source lines extending through the dummy patterns and having a different configuration than the common source lines in top view.

The dummy source lines may extend in a different direction than the common source lines, as viewed in top view.

A distance between neighboring dummy source lines may be greater than a distance between neighboring common source lines.

The dummy source lines and the common source lines may include a same conductive material.

The dummy source lines may include a plurality of dummy source line segments spaced apart from each other in the second and third directions.

BRIEF DESCRIPTION OF THE DRAWINGS

Features will become apparent to those of ordinary skill in the art by describing in detail exemplary embodiments with reference to the attached drawings, in which:

FIGS. **1** to **4** illustrate a top plan view, a perspective view and cross-sectional views of a semiconductor device in accordance with example embodiments;

FIGS. **5** to **13** illustrate cross-sectional views and top plan views of a method of manufacturing a semiconductor device in accordance with example embodiments;

FIGS. **14** and **15** illustrate a top plan view and a perspective view, respectively, of a semiconductor device in accordance with example embodiments;

FIGS. **16** and **17** illustrate top plan views of a method of manufacturing a semiconductor device in accordance with example embodiments;

FIGS. **18** and **19** illustrate a top plan view and a perspective view, respectively, of a semiconductor device in accordance with example embodiments;

FIGS. **20**, **21** and **22** illustrate a top plan view, a perspective view, and a cross-sectional view, respectively, illustrating a semiconductor device in accordance with example embodiments;

FIGS. **23** and **24** illustrate cross-sectional views of a method of manufacturing a semiconductor device in accordance with example embodiments;

FIGS. **25**, **26** and **27** illustrate a top plan view, a perspective view, and a cross-sectional view, respectively, of a semiconductor device in accordance with example embodiments;

FIG. **28** illustrates a top plan view of a semiconductor device in accordance with example embodiments;

FIG. **29** illustrates a top plan view of a semiconductor device in accordance with example embodiments;

FIG. **30** illustrates a top plan view of a semiconductor device in accordance with example embodiments; and

FIG. **31** illustrates a top plan view of a semiconductor device in accordance with example embodiments.

DETAILED DESCRIPTION

Various example embodiments will be described more fully hereinafter with reference to the accompanying drawings, in which some example embodiments are shown. Example embodiments may, however, be embodied in many different forms and should not be construed as limited to those set forth herein. Rather, these example embodiments are provided so that this description will be thorough and complete, and will fully convey the scope of the exemplary implementations to those skilled in the art. In the drawings, the sizes and relative sizes of layers and regions may be exaggerated for clarity.

It will be understood that when an element or layer is referred to as being "on," "connected to" or "coupled to" another element or layer, it can be directly on, connected or coupled to the other element or layer or intervening elements or layers may be present. In contrast, when an element is referred to as being "directly on," "directly connected to" or "directly coupled to" another element or layer, there are no intervening elements or layers present. Like numerals refer to like elements throughout. As used herein, the term "and/or" includes any and all combinations of one or more of the associated listed items.

It will be understood that, although the terms first, second, third, fourth etc. may be used herein to describe various elements, components, regions, layers and/or sections, these elements, components, regions, layers and/or sections should not be limited by these terms. These terms are only used to distinguish one element, component, region, layer or section from another region, layer or section. Thus, a first element, component, region, layer or section discussed below could be termed a second element, component, region, layer or section without departing from the teachings of the example embodiments.

Spatially relative terms, such as "beneath," "below," "lower," "above," "upper" and the like, may be used herein for ease of description to describe one element or feature's relationship to another element(s) or feature(s) as illustrated in the figures. It will be understood that the spatially relative terms are intended to encompass different orientations of the device in use or operation in addition to the orientation depicted in the figures. For example, if the device in the figures is turned over, elements described as "below" or "beneath" other elements or features would then be oriented "above" the other elements or features. Thus, the exemplary term "below" can encompass both an orientation of above and below. The device may be otherwise oriented (rotated 90 degrees or at other orientations) and the spatially relative descriptors used herein interpreted accordingly.

The terminology used herein is for the purpose of describing particular example embodiments only and is not intended to be limiting. As used herein, the singular forms "a," "an" and "the" are intended to include the plural forms as well, unless the context clearly indicates otherwise. It will be further understood that the terms "comprises" and/or "comprising," when used in this specification, specify the presence of stated features, integers, steps, operations, elements, and/or components, but do not preclude the presence or addition of one or more other features, integers, steps, operations, elements, components, and/or groups thereof.

Example embodiments are described herein with reference to cross-sectional illustrations that are schematic illustrations of idealized example embodiments (and intermedi-

ate structures). As such, variations from the shapes of the illustrations as a result, for example, of manufacturing techniques and/or tolerances, are to be expected. Thus, example embodiments should not be construed as limited to the particular shapes of regions illustrated herein but are to include deviations in shapes that result, for example, from manufacturing. For example, an implanted region illustrated as a rectangle will, typically, have rounded or curved features and/or a gradient of implant concentration at its edges rather than a binary change from implanted to non-implanted region. Likewise, a buried region formed by implantation may result in some implantation in the region between the buried region and the surface through which the implantation takes place. Thus, the regions illustrated in the figures are schematic in nature and their shapes are not intended to illustrate the actual shape of a region of a device and are not intended to limit.

Unless otherwise defined, all terms (including technical and scientific terms) used herein have the same meaning as commonly understood by one of skill in the art. It will be further understood that terms, such as those defined in commonly used dictionaries, should be interpreted as having a meaning that is consistent with their meaning in the context of the relevant art and will not be interpreted in an idealized or overly formal sense unless expressly so defined herein.

Although corresponding plan views and/or perspective views of some cross-sectional view(s) may not be shown, the cross-sectional view(s) of device structures illustrated herein provide support for a plurality of device structures that extend along two different directions as would be illustrated in a plan view, and/or in three different directions as would be illustrated in a perspective view. The two different directions may or may not be orthogonal to each other. The three different directions may include a third direction that may be orthogonal to the two different directions. The plurality of device structures may be integrated in a same electronic device. For example, when a device structure (e.g., a memory cell structure or a transistor structure) is illustrated in a cross-sectional view, an electronic device may include a plurality of the device structures (e.g., memory cell structures or transistor structures), as would be illustrated by a plan view of the electronic device. The plurality of device structures may be arranged in an array and/or in a two-dimensional pattern.

FIGS. **1** to **4** are a top plan view, a perspective view, and cross-sectional views illustrating a semiconductor device in accordance with example embodiments. Specifically, FIG. **2** is an enlarged perspective view of a portion "A" in FIG. **1**. FIGS. **3** and **4** are cross-sectional views taken along lines I-I' and II-II' in FIG. **1**, respectively.

In example embodiments, the semiconductor device may be a non-volatile vertical memory device. Memory cells included in the semiconductor device may be formed on a channel extending vertically, e.g., along a normal direction, with respect to a top surface of a substrate.

A direction substantially vertical to the top surface of the substrate is referred to as a first direction, and two directions substantially parallel to the top surface of the substrate and substantially crossing each other are referred to as a second direction and a third direction. For example, the second direction and the third direction are substantially perpendicular to each other. Additionally, a direction indicated by an arrow and a reverse direction thereof are considered as a same direction. The above mentioned definitions of the directions are the same throughout all the figures in this specification.

Referring to FIGS. **1** to **4**, a semiconductor device may include a memory cell structure disposed on a cell region of a substrate **100**, and a dummy structure disposed on a dummy region of the substrate **100**. For example, the dummy region of the substrate **100** may be located at both ends of the cell region in the third direction.

The substrate **100** may include a semiconductor material, e.g., silicon (Si) or germanium (Ge).

The memory cell structure may include first and second channel structures **120***a* and **120***b*, gate lines **134**, and a common source line (CSL) **144**. The gate lines **134** may be formed on outer sidewalls of the first and second channel structures **120***a* and **120***b*. The gate lines **134** may extend in the second direction, and may be spaced apart from each other along the first direction. The CSL **144** may extend through the gate lines **134**, and may extend in the second direction. The CSL **144** may serve as a cutting line intersecting the gate lines **134**.

The first and second channel structures **120***a* and **120***b* may each include a semiconductor pattern **110**, a channel layer **114** extending from a top surface of the semiconductor pattern **110** in the first direction, a dielectric layer structure **112** surrounding an outer sidewall of the channel layer **114**, a filling pattern **116** in the channel layer **114**, and a pad **118** disposed on the dielectric layer **112**, the channel layer **114**, and the filling pattern **116**.

The semiconductor pattern **110** may include a semiconductor material, e.g., silicon or germanium. In some embodiments, the semiconductor pattern **110** may be omitted, and the channel layer **114** may be formed, e.g., directly, on the substrate **100**.

The channel layer **114** may protrude vertically from a top surface of the substrate **100**, and may have a hollow, e.g., cylindrical, shape or, e.g., a cup, shape. In an embodiment, the channel layer **114** may have, e.g., a solid cylindrical shape or a pillar shape. The channel layer **114** may include, e.g., polysilicon or single crystalline silicon. P-type impurities, e.g., boron (B), may be doped in a portion of the channel layer **114**.

The dielectric layer structure **112** may be formed on the outer sidewall of the channel layer **114**, and may have a substantial straw shape, e.g., the dielectric layer structure **112** may have a shape of a cylindrical shell surrounding the channel layer **114**. In some embodiments, the dielectric layer structure **112** may include a tunnel insulation layer, a charge storage layer, and a blocking layer sequentially formed from the outer sidewall of the channel layer **114**. For example, the dielectric layer structure **112** may have an oxide-nitride-oxide (ONO) layered structure.

The filling pattern **116** may include an insulation material, e.g., silicon oxide. If the channel layer **114** has a solid cylindrical shape or a pillar shape, the filling pattern **116** may be omitted.

Upper portions of the dielectric layer structure **112**, the channel layer **114**, and the filling pattern **116** may be capped or closed by the pad **118**. The pad **118** may include, e.g., polysilicon or single crystalline silicon, and may further include, e.g., n-type impurities, e.g., phosphorous (P) or arsenic (As).

In example embodiments, the first channel structures **120***a* may be arranged along the second direction to form a channel column, e.g., a plurality of the first channel structures **120***a* may be arranged in an array along the second direction. A plurality of the channel columns may be arranged along the third direction, e.g., the channel columns may be spaced apart from each other along the third direction with the CSL **144** therebetween.

The gate lines **134** may surround the first channel structure **120***a* and may extend in the second direction. In example embodiments, the gate lines **134** may surround the plurality of the channel columns arranged along the third direction.

The gate lines **134** may include a metal having a low electrical resistance or a nitride thereof. For example, the gate line **134** may include tungsten (W), tungsten nitride, titanium (Ti), titanium nitride, tantalum (Ta), tantalum nitride, platinum (Pt), or the like.

In example embodiments, a lowermost gate line of the gate lines **134** may serve as a ground selection line (GSL), and an uppermost gate line of the gate lines **134** may serve as a string selection line (SSL). The gate lines **134** between the GSL and the SSL may serve as word lines. The number of levels of the GSL, the word lines, and the SSL may be properly adjusted in consideration of a circuit design and a degree of integration of the semiconductor device.

An insulating interlayer pattern **102***a* may be interposed at each level between the gate lines **134**. The insulating interlayer pattern **102***a* may include, e.g., a silicon oxide-based material.

The insulating interlayer patterns **102***a* and the gate lines **134** may be alternately stacked along the first direction such that a first structure **138** may be defined. The first structure **138** may extend in the second direction. Both lateral portions of the first structure **138** in the second direction may serve as a wiring region and have a stepped shape. Thus, different wirings may be connected to different gate lines **134** included in the first structure **138** so that an electrical signal may be individually applied to each gate line **134**.

A central portion of the first structure **138** which may not have the stepped shape may serve as a main cell region, and the lateral portion having the stepped shape may serve as the wiring region. The wirings may include contact plugs **150** that may be in contact with gate lines **134**, and conductive lines electrically connected to the contact plugs **150**.

The first channel structure **120***a* may be disposed on the main cell region, and may be provided as a portion of a memory cell. The second channel structure **120***b* may be disposed on the wiring region, and may not be provided as the portion of the memory cell. The second channel structure **120***b* may serve as a supporting pillar for the lateral portion of the first structure **138**.

A plurality of the second channel structures **120***b* may not be in contact with the wirings, or may be spaced apart from the wirings. The second channel structures **120***b* may have an arrangement different from that of the first channel structures **120***a*. In example embodiments, a density in a unit area of the second channel structures **120***b* may be less than that of the first channel structures **120***a*.

A first opening **122** may be formed between the first structures **138** neighboring each other. The first opening **122** may extend in the second direction. The first opening **122** may extend through the alternating stack of insulating interlayer patterns **102***a* and the gate lines **134** to the top surface of the substrate **100**. An insulation pattern **142** may be formed on a sidewall of the first opening **122** (FIG. **3**). The gate lines **134** and the CSL **144** may be insulated from each other by the insulation pattern **142**. An impurity region **126** may be formed at an upper portion of the substrate **100** which may be exposed through the first opening **122**.

The CSL **144** may be in the first opening **122** and may be in contact with the impurity region **126**. The CSL **144** may extend in the second direction. The CSL **144** may include a metal having a low resistance, e.g., W, Ti, Ta, Pt, etc., or a nitride thereof.

The dummy structure disposed on the dummy region may include a second structure **140** and a dummy source line **146**. A plurality of the second structures **140** may be arranged and spaced apart from each other along the second direction. A plurality of the dummy source lines **146** may extend between the neighboring second structures **140**.

The second structure **140** may include the insulating interlayer patterns **102***a* and dummy patterns **136** which may be alternately stacked. The second structure **140** may extend in a direction that may be different from the second direction, e.g., the second structure **140** may extend in the third direction.

The insulating interlayer pattern **102***a* included in the second structure **140** may be the same as the insulating interlayer pattern **102***a* of the first structure **138**. The dummy patterns **136** included in the second structure **140** may be formed at levels corresponding to the gate lines **134** of the first structure **138**.

At least a portion of the dummy patterns **136** may include the same conductive material as that of the gate lines **134**. In example embodiments, a width in the second direction of the second structure **140** may be substantially the same as a width in the third direction of the first structure **138**. The second structure **140** may have a stepped structure along the third direction.

A second opening **124** may be formed between neighboring second structures **140**. The second opening **124** may extend in a direction different from the second direction. The second opening **124** may extend to the top surface of the substrate **100**. In example embodiments, the second opening **124** may extend in the third direction, and a plurality of the second openings **124** may be formed to be spaced apart from each other along the second direction. In example embodiments, a width in the second direction of the second opening **124** may be equal to or greater than a width in the third direction of the first opening **122**.

An impurity region may be formed at an upper portion of the substrate **100** exposed through the second opening **124**. The impurity region under the second opening **124** may be formed together with the impurity region **126** under the first opening **122** of the cell region. However, the impurity region under the second opening **124** may not participate in any electrical operation.

The insulation pattern **142** may be formed on a sidewall of the second opening **124**. The dummy pattern **136** and the dummy source line **146** may be insulated from each other by the insulation pattern **142**.

The dummy source line **146** may be disposed in the second opening **124**, and may be in contact with the top surface of the substrate **100**. The dummy source line **146** may extend in the third direction. The dummy source line **146** may include a conductive material substantially the same as that of the CSL **144**.

A third channel structure **120***c* having a construction substantially the same as that of the first channel structure **120***a* may be disposed on the dummy region. The third channel structure **120***c* may not serve as a channel of the memory cell, and may merely serve as a supporting pillar of the second structure **140**. A plurality of the third channel structures **120***c* may be provided in an arrangement different from those of the first channel structures **120***a* and/or the second channel structures **120***b*. In example embodiments, a density in a unit area of the third channel structures **120***c* may be less than that of the first channel structures **120***a*.

In example embodiments, memory cells defined at both ends in the third direction on the cell region may be dummy

cells **148** that may not participate in an actual operation. Thus, wirings for applying a signal may not be connected to the dummy cells **148**.

As the degree of integration of the semiconductor device becomes higher, the stacked number of the gate lines **134** and the insulating interlayer patterns **102***a* may also become greater. Thus, aspect ratios of the first and second structures **138** and **140** may be increased. Accordingly, a bending or a collapse of the first and second structures **138** and **140** may be caused due to a stress imposed thereon. For example, the second structure **140** and end portions of the first structure **138** may be more vulnerable to the bending or the collapse because shrinkage and release of the structures may be irregularly repeated by the stress.

However, according to example embodiments, the first opening **122** and the second opening **124** may extend in different direction, and thus stress orientations imposed on the first and second structures **138** and **140** may be different. Therefore, a stress imposed on the first structure **138** while forming the first opening **122** may be reduced.

At least a portion of the dummy patterns **136** may include the same conductive material as that of the gate lines **134**. The dummy patterns **136** may not include a nitride that may be a significant source of stress, or a portion including the nitride may be reduced. Thus, the stress imposed on the first structure **138** may be reduced. Therefore, the bending or the collapse of the first and second structures **138** and **140** may be suppressed.

FIGS. **5** to **13** are cross-sectional views and top plan views illustrating stages in a method of manufacturing a semiconductor device in accordance with example embodiments. For example, FIGS. **5** to **7**, **9**, **11** and **13** are cross-sectional views illustrating stages in a method of manufacturing the semiconductor device of FIGS. **1** to **4**. FIGS. **8**, **10** and **12** are enlarged top plan views illustrating the stages in the method. Specifically, FIGS. **5** to **7**, **9**, **11** and **13** are taken along the line I-I' indicated in FIG. **1**.

Referring to FIG. **5**, the insulating interlayers **102** and the sacrificial layers **104** may be alternately and repeatedly formed on the substrate **100**, which includes a cell region and a dummy region. The insulating interlayers **102** and the sacrificial layers **104** may be partially removed to form a mold structure **106**. End portion of the mold structure **106** in the second and third directions may have stepped structures. The dummy region may be adjacent to an end portion of the cell region in the third direction.

In example embodiments, the insulating interlayer **102** may be formed of an oxide-based material, e.g., silicon dioxide, silicon oxycarbide and/or silicon oxyfluoride. The sacrificial layer **104** may be formed of a material that may have an etching selectivity with respect to the insulating interlayer **102** and may be easily removed by a wet etching process. For example, the sacrificial layer **104** may be formed of a nitride-based material, e.g., silicon nitride and/or silicon boronitride.

The sacrificial layers **104** may be removed by a subsequent process to provide spaces for gate lines. Thus, the number of the insulating interlayers **102** and the sacrificial layers **104** may be determined in consideration of the number of the gate lines.

For example, a photoresist pattern may be formed on an uppermost insulating interlayer **102** such that end portions of the uppermost insulating interlayer **102** may be exposed. End portions of the insulating interlayers **102** and the sacrificial layers **104** may be etched using the photoresist pattern as an etching mask. End portions of the photoresist pattern may then be removed so that a width of the photoresist pattern may be reduced. Next, the insulating interlayers **102** and the sacrificial layers **104** may be etched using the photoresist pattern as the etching mask again. Etching processes may be repeated in a similar manner as described above to obtain the mold structure **106**.

A portion of the mold structure **106** on the dummy region may have a stepped structure along the third direction. A portion of the mold structure **106** on the cell region may include stepped structures at both end portions in the second direction.

Referring to FIG. **6**, a lower insulation layer **108** covering lateral portions of the mold structure **106** may be formed on the substrate **100**. First, second and third channel structures may be formed through the mold structure **106** and the lower insulation layer **108**

In example embodiments, an insulation layer covering the mold structure **106** may be formed on the substrate **100**. The insulation layer may be formed of, e.g. silicon oxide by a chemical vapor deposition (CVD) process, a spin coating process, etc. An upper portion of the insulation layer may be planarized by a chemical mechanical polish (CMP) process and/or an etch-back process until the uppermost insulating interlayer **102** is exposed to form the lower insulation layer **108**. The lower insulation layer **108** may cover the stepped structures at the end portions of the mold structure **106**. In example embodiments, the lower insulation layer **108** may include an insulation material substantially the same as or similar to that of the insulating interlayer **102**.

The mold structure **106** and/or the lower insulation layers **108** may be partially etched along the first direction to form the first to third channel holes. For example, a hard mask may be formed on the uppermost insulating interlayer **102** and the lower insulation layer **108**. The mold structure **106** and the lower insulation layer **108** may be partially removed by, e.g., a dry etching process through the hard mask to form the first to third channel holes.

The first and second channel holes may be formed through the mold structure **106** on the cell region, and the third channel hole may be formed through the mold structure on the dummy region. In example embodiments, a plurality of the first channel holes may be formed through a central portion of the mold structure **106** (e.g., on a main cell region) that may not have the stepped structure. The first channel holes may be formed along the second and third directions regularly. The second channel holes may be formed through the stepped structure in the second direction of the mold structure **106** (e.g., on a wiring region).

In example embodiments, the second channel holes may be formed in an arrangement different from that of the first channel holes. In example embodiments, the third channel holes may be formed in an arrangement different from those of the first channel holes and/or the second channel holes.

Each of the second and third channel holes may have a size the same as or different from that of the first channel hole. The second and third channel holes formed at the end portions of the mold structure **106** may not extend to the substrate **100** due to an etching loading to cause a not-open defect. In some embodiments, the size of the second channel hole and/or the third channel hole may be increased relatively to the size of the first channel hole so that the not-open defect may be avoided.

A silicon epitaxial growth process may be performed from the substrate **100** exposed through the first to third channel holes so that semiconductor patterns **110** may be formed at lower portions of the first to third channel holes. In some embodiments, the formation of the semiconductor pattern **110** may be omitted.

A dielectric layer may be formed along sidewalls and bottoms of the first to third channel holes, the uppermost insulating interlayer **102** and the lower insulation layer **108**. In example embodiments, the dielectric layer may be formed by sequentially forming a blocking layer, a charge storage layer and a tunnel insulation layer. For example, the blocking layer may be formed using an oxide, e.g., silicon oxide, the charge storage layer may be formed using silicon nitride or a metal oxide, and the tunnel insulation layer may be formed using an oxide, e.g., silicon oxide. In example embodiments, the dielectric layer may be formed as an oxide-nitride-oxide (ONO) layered structure. The blocking layer, the charge storage layer, and the tunnel insulation layer may be formed by a CVD process, a plasma-enhanced chemical vapor deposition (PECVD) process, an atomic layer deposition (ALD) process, etc.

Portions of the dielectric layer formed on the bottoms of the first to third channel holes may be removed by, e.g., an etch-back process so that a top surface of the semiconductor pattern **110** may be exposed. Thus, the dielectric layer structure **112** may be formed on each sidewall of the first to third channel holes. The dielectric layer structure **112** may have a substantial straw shape.

The channel layer **114** may be formed conformally on the uppermost insulating interlayer **102**, the dielectric layer structure **112**, and the semiconductor pattern **110**, and the filling pattern **116** filling remaining portions of the first to third channel holes may be formed. In example embodiments, the channel layer **114** may be formed of polysilicon or amorphous silicon optionally doped with impurities. In some embodiments, the channel layer **114** may sufficiently fill the first to third channel holes. In this case, the formation of the filling pattern **116** may be omitted.

Upper portions of the dielectric layer structure **112**, the channel layer **114**, and the filling pattern **116** may be removed by an etch-back process to form recesses. A pad layer sufficiently filling the recesses may be formed on the uppermost insulating interlayer **102** and the lower insulation layer **108**. An upper portion of the pad layer may be planarized until top surfaces of the uppermost insulating interlayer **102** and/or the lower layer **108** may be exposed to form pads **118** from remaining portions of the pad layer. In example embodiments, the pad layer may be formed using, e.g., polysilicon optionally doped with n-type impurities. The planarization process may include a CMP process and/or an etch-back process.

After performing the aforementioned processes, the first channel structure **120***a*, the second channel structure **120***b*, and the third channel structure (also see FIG. **1**) may be formed in the first channel hole, the second channel hole, and the third channel hole, respectively. In example embodiments, the plurality of the first channel structures **120***a* may be formed through the mold structure **106** on the main cell region, the plurality of the second channel structures **120***b* may be formed through the mold structure **106** on the wiring region, and the plurality of the third channel structures **120***c* may be formed through the mold structure **106** on the dummy region.

The first to third channel structures **120***a*, **120***b*, and **120***c* may have substantially the same construction, while only the first channel structures **120***a* are illustrated in FIG. **6**. The first channel structures **120***a* may substantially serve as a portion of the memory cells. The second and third channel structures **120***b* and **120***c* may serve as pillars supporting both portions of the mold structure **106**.

Referring to FIGS. **7** and **8**, the mold structure **106** and the lower insulation layer **108** may be anisotropically etched to form the first openings **122** on the cell region, and the second openings **124** on the dummy region. The top surface of the substrate **100** may be exposed through bottoms of the first and second openings **122** and **124**.

As illustrated in FIG. **8**, the first openings **122** may extend in the second direction. The mold structure **106** may be cut or intersected by the first openings **122** along the second direction to form first mold structures **128** spaced apart from each other along the third direction. The first mold structure **128** may surround the plurality of the first channel structures **120***a*, and extend in the second direction.

The second openings **124** may extend in a direction different from the second direction, e.g., the second opening **124** may extend in the third direction (FIG. **8**). The mold structure **106** may be cut or intersected by the second openings **124** along the third direction to form second mold structures **130** spaced apart from each other along the second direction.

In example embodiments, a width in the third direction of the first opening **122** may be substantially the same as a width in the second direction of the second opening **124**. In example embodiments, a distance between the first openings **122** neighboring in the third direction may be substantially the same as a distance between the second openings **124** neighboring in the second direction. For example, a width in the second direction of the second mold structure **130** may be substantially the same as a width in the third direction of the first mold structure **128**.

The first and second mold structures **128** and **130** may include insulating interlayer patterns **102***a* and sacrificial patterns **104***a* alternately stacked. Both ends of the first mold structure **128** in the second direction may have stepped structures in the second direction. The second mold structure **130** may include a stepped structure in the third direction.

Etching directions and/or extending directions of the first and second openings **122** and **124** may be different so that a stress generated during the etching process for forming the first mold structures **128** may be reduced or mitigated. Thus, defects, e.g., bending of the first mold structure **128**, may be avoided.

Impurities may be implanted through the first and second openings **122** and **124** to form impurity regions **126**. The impurities may be n-type impurities, e.g., P or As.

Referring to FIGS. **9** and **10**, the sacrificial patterns **104***a* exposed through the first and second openings **122** and **124** may be removed to form first gaps **132***a* and second gaps **132***b*. In example embodiments, the sacrificial patterns **104***a* may be removed by a wet etching process using, e.g., phosphoric acid and/or sulfuric acid as an etchant solution.

In example embodiments, the sacrificial patterns **104***a* formed on the cell region may be fully removed. The sacrificial patterns **104***a* formed on the dummy region may be fully or partially removed. For example, if the distance between the first openings **122** neighboring in the third direction is substantially the same as the distance between the second openings **124** neighboring in the second direction, the sacrificial patterns **104***a* formed on the dummy region may be fully removed.

The first gaps **132***a* may be formed at spaces from which the sacrificial patterns **104***a* of the cell region are removed. The second gaps **132***b* may be formed at spaces from which the sacrificial patterns **104***a* of the dummy region may be removed. Sidewalls of the first channel structures **120***a* may be partially exposed by the first gap **132***a*.

Referring to FIGS. **11** and **12**, gate lines **134** may be formed in the first gaps **132***a*, and dummy patterns **136** may be formed in the second gaps **132***b*. In example embodi-

ments, a gate electrode layer sufficiently filling the first and second gaps **132***a* and **132***b* may be formed. The gate electrode layer may also partially fill the first and second openings **122** and **124**, and may be also formed on upper surfaces of the first and second mold structure **128** and **130**.

The gate electrode layer may be formed using a metal or a metal nitride having low electrical resistance and work function. For example, the gate electrode layer may be formed of tungsten, tungsten nitride, titanium, titanium nitride, tantalum, tantalum nitride, platinum, etc. In an embodiment, the gate electrode layer may be formed as a multi-layered structure including a barrier layer formed of a metal nitride, and a metal layer.

Portions of the gate electrode layer formed in the first and second openings **122** and **124**, and formed on the upper surfaces of the first and second mold structures **128** and **130** may be removed. Accordingly, the gate line **134** may be formed in the first gap **132***a* at each level, and the dummy pattern **136** may be formed in the second gap **132***b* at each level.

After performing the aforementioned processes, a first structure **138** including the insulating interlayer patterns **102***a* and the gate lines **134**, and extending in the second direction may be formed on the cell region. Both end portions in the second direction of the first structure **138** may have a stepped structure. The second structure **140** including the insulating interlayer patterns **102***a* and the dummy patterns **136**, and extending in the third direction may be formed on the dummy region.

As described above, the sacrificial patterns **104***a* included in the second mold structure **130** may be replaced with the dummy patterns **136**. Thus, the second structure **140** may not include the sacrificial patterns **104***a* formed of a nitride generating a stress. Therefore, a stress transferred to the first structure **138** may be reduced so that a structural stability of the first structure **138** may be improved.

Referring to FIG. **13**, the insulation patterns **142** may be formed on sidewalls of the first and second openings **122** and **124**. The CSL **144** and the dummy source line **146** filling the first opening **122** and the second opening **124**, respectively, may be formed.

In example embodiments, an insulation layer may be formed conformally on sidewalls and bottoms of the first and second openings **122** and **124**, and on upper surfaces of the first structure **138**, the second structure **140**, and the lower insulation layer **108**. Portions of the insulation layer formed on the bottoms of the first and second openings **122** and **124**, and on the upper surfaces of the first and second structures **138** and **140** may be removed by, e.g., an anisotropic etching process. Thus, the insulation pattern **142** may be formed on each sidewall of the first and second openings **122** and **124**.

A conductive layer filling the first and second openings **122** and **124** may be formed on the insulation pattern **142**. The conductive layer may be planarized until the upper surfaces of the first and second structures **138** and the lower insulation layer **108** may be exposed to form the CSL **144** and the dummy source line **146**. The planarization process may include a CMP process and/or an etch-back process.

In some embodiments, an upper insulation layer may be formed on the first and second structures **138** and **140** and the lower insulation layer **108**. The upper insulation layer may be etched to form contact holes through which the gate lines **134** may be exposed on the wiring region. Contact plugs **150** may be formed in the contact holes. Wirings electrically connected to the contact plugs **150** may be further formed on the upper insulation layer. Thus, a memory cell structure may be formed on the cell region, and a dummy structure may be formed on the dummy region.

Memory cells defined at both ends in the third direction on the cell region may serve as the dummy cells **148** that may not participate in an actual operation. Thus, wirings and contact plugs for applying a signal may not be connected to the dummy cells **148**.

FIGS. **14** and **15** are a top plan view and a perspective view, respectively, illustrating a semiconductor device in accordance with example embodiments. FIG. **15** illustrates a second structure of the semiconductor device of FIG. **14**.

The semiconductor device of FIGS. **14** and **15** may have elements and/or constructions substantially the same as or similar to those illustrated with reference to FIGS. **1** to **4** except for a dummy structure on a dummy region. Thus, detailed descriptions of repeated elements and/or structures are omitted herein, and like reference numerals are used to designate like elements.

Referring to FIGS. **14** and **15**, the dummy structure on the dummy region may include second structures **140***a* spaced apart from each other along the second direction, and a dummy source line **146***a* extending between the second structures **140***a*. A width in the second direction of the second structure **140***a* may be greater than a width in the third direction of the first structure **138** on the cell region.

The second structure **140***a* may include the insulating interlayer patterns **102***a* and dummy patterns **163** which may be alternately stacked. The second structure **140***a* may extend in a direction different from the second direction. In example embodiments, the second structure **140***a* may extend in the third direction.

The insulating interlayer pattern **102***a* included in the second structure **140***a* may include substantially the same material as that of the insulating interlayer pattern **102***a* included in the first structure **138**. The insulating interlayer patterns **102***a* of the first and second structures **138** and **140***a* may be positioned at a same height at each level.

The dummy pattern **163** of the second structure **140***a* may be positioned at a same height as that of a gate line **134** of the first structure **138** at each level. The dummy pattern **163** at each level may include conductive patterns **160** at both end portions in the second direction, and a second sacrificial pattern **162** interposed between the conductive patterns **160**. The conductive pattern **160** may include substantially the same conductive material as that of the gate line **134**. The second sacrificial pattern **162** may include a nitride-based material such as silicon nitride or silicon boronitride. The second sacrificial pattern **162** may remain from not being replaced with the conductive material.

The second structure **140***a* may have a stepped structure along the third direction. For example, lengths in the third direction of the insulating interlayer patterns **102***a* and the dummy patterns **163** may be reduced in the first direction from a top surface of the substrate **100**.

A second opening **124***a* may be formed between the second structures **140***a*. The second opening **124***a* may extend in a direction different from the second direction. In example embodiments, the second opening **124***a* may extend in the third direction, and a plurality of the second openings **124***a* may be formed along the second direction. The second opening **124***a* may extend through a lower insulation layer (not illustrated) to the top surface of the substrate **100**.

An insulation pattern may be formed on a sidewall of the second opening **124***a*. The dummy pattern **163** and a dummy source line **146***a* may be insulated from each other by the insulation pattern. The dummy source line **146***a* may be

disposed in the second opening **124***a*, and may be in contact with the top surface of the substrate **100**. The dummy source line **146***a* may extend in the third direction. The dummy source line **146***a* may include substantially the same conductive material as that of the CSL **144** of the cell region. A distance between the dummy source lines **146***a* neighboring in the second direction may be greater than a distance between the CSLs **144** neighboring in the third direction.

Third channel structures **120***c* that may have a construction substantially the same as that of the first channel structures **120***a* on the cell region, and may be disposed on the dummy region. The third channel structure **120***c* may merely serve as a pillar for supporting the second structure **140***a*.

In example embodiments, an amount of the nitride-based material such as silicon nitride may be reduced in the second structure **140***a*. Therefore, stress-related defects may be avoided in the semiconductor device.

FIGS. **16** and **17** are top plan views illustrating a method of manufacturing a semiconductor device in accordance with example embodiments. For example, FIGS. **16** and **17** illustrate a method of manufacturing the semiconductor device of FIGS. **14** and **15**. FIGS. **16** and **17** illustrate an end portion in the third direction of a cell region, and a dummy region.

Processes substantially the same as or similar to those illustrated with reference to FIGS. **5** and **6** may be performed to form a mold structure **106** on a substrate, and first to third channel structures **120***a*, **120***b* and **120***c* extending through the mold structure **106**. A lower insulation layer **108** covering stepped portions of the mold structure **106** may be formed.

Referring to FIG. **16**, the mold structure **106** and the lower insulation layer **108** may be partially removed by, e.g., an anisotropic etching process, to form the first openings **122** and the second openings **124***a* on the cell region and the dummy region, respectively. The top surface of the substrate may be exposed through the first and second openings **122** and **124***a*.

The first opening **122** may have a construction substantially the same as that illustrated with reference to FIG. **7**. The second opening **124***a* may extend in a direction different from that of the first opening **122**. In example embodiments, the second opening **124***a* may extend in the third direction. A distance between the second openings **124***a* neighboring in the second direction may be greater than a distance between the first openings **122** neighboring in the third direction.

The mold structure **106** may be cut or intersected by the first opening **122** along the second direction such that first mold structures **128** may be formed. The first mold structure **128** may surround a plurality of channel columns, and may extend in the second direction.

The mold structure **106** may be cut or intersected by the second openings **124***a* along the third direction such that second mold structures **130***a* may be formed. A width in the second direction of the second mold structure **130***a* may be greater than a width in the third direction of the first mold structure **128**.

The first and second mold structures **128** and **130***a* may include insulating interlayer patterns and sacrificial patterns that may be alternately stacked. Impurities may be implanted through the first and second openings **122** and **124***a* to form impurity regions at upper portions of the substrate.

Referring to FIG. **17**, the sacrificial patterns exposed by the first and second openings **122** and **124***a* may be removed by, e.g., an isotropic etching process. The sacrificial patterns formed on the cell region may be fully removed. Thus, first gaps **132***a* may be formed at spaces from which the sacrificial patterns on the cell region are removed. A sidewall of the first channel structure **120***a* may be partially exposed by the first gap **132***a*.

The sacrificial pattern on the dummy region may have a width greater than that of the sacrificial pattern on the cell region. Thus, the sacrificial pattern on the dummy region may be only partially removed while the sacrificial pattern on the cell region may be fully removed. Accordingly, second gaps **168***b* may be formed at spaces from which the sacrificial patterns on the dummy region are removed, and a second sacrificial pattern **162** having a reduced width may remain at each level. A sidewall of the second sacrificial pattern **162** may be exposed by the second gap **168***b*.

Referring to FIGS. **14** and **15** again, the gate line **134** may be formed in each first gap **132***a*, and the conductive pattern **160** may be formed in each second gap **168***b*. The gate line **134** and the conductive pattern **160** may be formed by processes substantially the same as or similar to those illustrated with reference to FIGS. **11** and **12**.

After performing the aforementioned processes, the first structure **138** extending in the second direction and including the insulating interlayer patterns and gate lines **134** may be formed on the cell region. The second structure **140***a* extending in the third direction and including the insulating interlayer patterns **102***a* and dummy patterns **163** may be formed on the dummy region.

As described above, a portion of the sacrificial pattern included in the second mold structure **130***a* may be replaced with the conductive pattern to form the second structure **140***a*. Thus, stress imposed on the first structure **138** may be reduced to suppress structural defects of the first structure **138**. Subsequently, insulation patterns may be formed on sidewalls of the first and second openings **122** and **124***a*, and then the CSL **144** and the dummy source line **146***a* may be formed in the first opening **122** and the second opening **124***a*, respectively, as illustrated with reference to FIG. **13** to obtain the semiconductor device of FIG. **14**.

FIGS. **18** and **19** are a top plan view and a perspective view, respectively, illustrating a semiconductor device in accordance with example embodiments. FIG. **19** is an enlarged perspective view of a portion "A" in FIG. **18**.

The semiconductor device of FIGS. **18** and **19** may have elements and/or constructions substantially the same as or similar to those illustrated with reference to FIGS. **1** to **4**, except for a dummy structure on a dummy region. Thus, detailed descriptions of repeated elements and/or structures are omitted herein, and like reference numerals are used to designate like elements.

Referring to FIGS. **18** and **19**, the dummy structure on the dummy region may include second structures **140***b* spaced apart from each other on the substrate **100** along the second direction, and a dummy source line **146***b* extending between the second structures **140***b*. The second structure **140***b* may include insulating interlayer patterns **102***a* and dummy patterns **163***a* that may be alternately stacked.

The dummy pattern **163***a* may include substantially the same material as that of the gate line **134** on the cell region. In some embodiments, the dummy pattern **163***a* may include a conductive pattern (not illustrated) formed of the same conductive material as that of the gate line **134**, and a second sacrificial pattern (not illustrated) including silicon nitride.

In example embodiments, a width in the second direction of the second structure **140***b* may be substantially the same as a width in the third direction of the first structure **138**. In

some embodiments, the width in the second direction of the second structure **140***b* may be greater than the width in the third direction of the first structure **138**.

The second structure **140***b* may extend in a direction different from the second direction. In example embodiments, the second structure **140***b* may extend in a fourth direction diagonal to the second and third directions. Thus, a second opening **124***b* between the second structures **140***b* may extend in the fourth direction.

An insulation pattern may be formed on a sidewall of the second opening **124***b*. The dummy source line **146***b* may be formed in the second opening **124***b*. The dummy source line **146***b* may extend in the fourth direction. The semiconductor device of FIGS. **18** and **19** may be manufactured by a method substantially the same as or similar to that illustrated with reference to FIGS. **5** to **13**, except that the second opening **124***b* may be formed to extend in the fourth direction.

FIGS. **20**, **21** and **22** are a top plan view, a perspective view, and a cross-sectional view, respectively, illustrating a semiconductor device in accordance with example embodiments. FIG. **21** is an enlarged perspective view of a portion "A" in FIG. **20**. FIG. **22** is a cross-sectional view taken along line of FIG. **20**. For convenience of descriptions, an illustration of a third channel structure is omitted in FIG. **21**.

The semiconductor device of FIGS. **20** to **22** may have elements and/or constructions substantially the same as or similar to those illustrated with reference to FIGS. **1** to **4**, except for a dummy structure on a dummy region. Thus, detailed descriptions of repeated elements and/or structures are omitted herein, and like reference numerals are used to designate like elements.

Referring to FIGS. **20** to **22**, the dummy structure on the dummy region may include a second structure **170** having a stepped structure along the third direction, and a second opening **172** extending through the second structure **170** and in the second direction, and a dummy source line **176** formed in the second opening **172**.

The second structure **170** may include the insulating interlayer patterns **102***a* and dummy patterns **174** that may be alternately stacked. An end portion in the third direction of the second structure **170** may have a stepped shape. The second structure **170** may be cut or intersected along the second direction by the second opening **172**.

The second opening **172** may have a trench shape extending in the second direction, and a plurality of the second openings **172** may be arranged along the second and the third directions. In example embodiments, the second openings **172** may have different lengths in the second direction. In example embodiments, a distance between the second openings **172** neighboring in the second direction may not be uniform. In some embodiments, the second openings **172** may have the same length in the second direction, and a distance between the second openings **172** neighboring in the second direction may be uniform.

The dummy source line **176** may be disposed in the second opening **172**. An insulation pattern **142** may be formed on a sidewall of the second opening **172**. The dummy source line **176** may extend in the same direction as that of the CSL **144** on the cell region.

The dummy source line **176** may extend in the second direction, and the plurality of the dummy source lines **176** may be spaced apart from each other in the second direction. The dummy source lines **176** may be further arranged along the third direction. A length in the second direction of the dummy source line **176** may be less than that of the CSL **144**. In example embodiments, a distance between the dummy source lines **176** neighboring in the third direction may be equal to or greater than a distance between the CSLs **144** neighboring in the third direction.

The dummy pattern **174** may include the same material as that of a gate line **134** of the cell region. In some embodiments, the dummy pattern **174** may include a conductive pattern formed of the same material as that of the gate line **134**, and a second sacrificial pattern **104***a* formed of silicon nitride.

In example embodiments, memory cells defined at both ends in the third direction on a cell region may serve as dummy cells **148** that may not participate in an actual operation. Thus, wirings and contact plugs for applying a signal may not be connected to the dummy cells **148**.

In some embodiments, the CSL included in the dummy cell **148** may have a shape substantially the same as those of the CSL **144** on a main cell region and/or the dummy source line **176**.

FIGS. **23** and **24** are cross-sectional views illustrating a method of manufacturing a semiconductor device in accordance with example embodiments. For example, FIGS. **23** and **24** illustrate a method of manufacturing the semiconductor device of FIGS. **20** to **22**.

Referring to FIG. **23**, processes substantially the same as or similar to those illustrated with reference to FIGS. **5** and **6** may be performed to form a mold structure **106** on the substrate **100**, and first to third channel structures **120***a*, **120***b*, and **120***c* extending through the mold structure **106**. The lower insulation layer **108** covering stepped portions of the mold structure **106** may be formed.

The mold structure **106** and the lower insulation layer **108** may be partially removed by, e.g., an anisotropic etching process, to form the first openings **122** and the second openings **172** on the cell region and the dummy region, respectively. The top surface of the substrate **100** may be exposed through the first and second openings **122** and **172**.

The first opening **122** may have a shape or a structure substantially the same as that illustrated with reference to FIG. **7**. The second opening **172** may have a trench shape extending in the second direction, and a plurality of the second openings **172** may be spaced apart from each other along the second direction. The second openings **172** may be also formed along the third directions. In example embodiments, the first and second openings **122** and **172** may extend in the same direction.

In example embodiments, a distance between the second openings **172** neighboring in the third direction may be substantially the same as a distance between the first openings **122** neighboring in the third direction. In some embodiments, the distance between the second openings **172** neighboring in the third direction may be greater than the distance between the first openings **122** neighboring in the third direction.

Referring to FIG. **24**, processes substantially the same as or similar to those illustrated with reference to FIGS. **9** and **10** may be performed to remove the sacrificial patterns **104***a* from the mold structure **106**.

The sacrificial patterns **104***a* formed on the cell region may be fully removed. While removing the sacrificial patterns **104***a* on the cell region, the sacrificial patterns formed on the dummy region may be fully or partially removed. In example embodiments, a portion of the sacrificial pattern **104***a* may remain at an area in which the sacrificial pattern **104***a* may not be exposed by the second opening **172**.

First gaps **132***a* may be formed at spaces from which the sacrificial patterns **104***a* on the cell region are removed, and second gaps **178** may be formed at spaces from which the

sacrificial patterns **104***a* on the dummy region are removed. A sidewall of the first channel structure **120***a* may be partially exposed by the first gap **132***a*.

Referring to FIGS. **20** to **22** again, the gate line **134** may be formed in the first gap **132***a* at each level, and the dummy pattern **174** may be formed in the second gap **178** at each level. The gate line **134** and the dummy pattern **174** may be formed by processes substantially the same as or similar to those illustrated with reference to FIGS. **11** and **12**.

Subsequently, the insulation patterns **142** may be formed on sidewalls of the first and second openings **122** and **172**, and the CSL **144** and a dummy source line **176** filling the first opening **122** and the second opening **172**, respectively, may be formed as illustrated with reference to FIG. **13**. Thus, the semiconductor device of FIGS. **20** to **22** may be achieved.

FIGS. **25**, **26**, and **27** are a top plan view, a perspective view, and a cross-sectional view, respectively, illustrating a semiconductor device in accordance with example embodiments. The semiconductor device of FIGS. **25** to **27** may have elements and/or constructions substantially the same as or similar to those illustrated with reference to FIGS. **1** to **4**, except for a dummy structure on a dummy region. Thus, detailed descriptions of repeated elements and/or structures are omitted herein, and like reference numerals are used to designate like elements.

Referring to FIGS. **25** to **27**, the dummy structure on the dummy region may include a second structure **170***a* having a stepped structure along the third direction, a second opening **172***a* extending through the second structure **170***a* and in the second direction, and a dummy source line **176***a* formed in the second opening **172***a*. The second structure **170***a* may include insulating interlayer patterns **102***a* and dummy patterns **174***a* that may be alternately stacked.

The second opening **172***a* may extend in the second direction. In some embodiments, a plurality of the second openings **172***a* may be formed along the third direction. In example embodiments, the first opening **122** and the second opening **172***a* may have substantially the same shape.

The dummy source line **176***a* may be formed in the second opening **172***a*. The insulation pattern **142** may be formed on a sidewall of the second opening **172***a*.

The dummy source line **176***a* may extend in a direction substantially the same as that of the CSL **144** on the cell region. For example, the dummy source line **176***a* and the CSL may extend in the second direction. The second structure **170***a* may be cut or intersected by the dummy source line **176***a*. In example embodiments, a width in the third direction of the dummy source line **176***a* may be equal to or greater than that of the CSL **144**.

In example embodiments, a distance between the dummy source lines **176***a* may be greater than a distance between the CSLs **144** neighboring in the third direction. FIG. **25** only illustrates one dummy source line **176***a* on each dummy region, however, at least two dummy source lines **176***a* may be formed on the each dummy region.

The dummy pattern **174***a* may include the same material as that of a gate line **134**. In example embodiments, the dummy pattern **174***a* at a certain level may include a conductive pattern **160***a* formed of the same material as that of the gate line **134**, and a second sacrificial pattern **162***a* formed of a nitride. The dummy pattern **174***a* at a certain level may only include the conductive pattern **160***a*.

In example embodiments, memory cells defined at both ends in the third direction on the cell region may serve as dummy cells **148** that may not participate in an actual operation. Thus, wirings and contact plugs for applying a signal may not be connected to the dummy cells **148**.

In example embodiments, the CSL included in the dummy cell **148** may have a shape substantially the same as that of the CSL **144** on a main cell region. In some embodiments, the CSL included in the dummy cell **148** may have a shape substantially the same as that of the dummy source line **176***a*.

The semiconductor device of FIGS. **25** to **27** may be manufactured from a method substantially the same as or similar to that illustrated with reference to FIGS. **23** and **24**. However, when forming the first and second openings, the second openings may be formed to cut the second structure along the second direction and have a greater distance therebetween than a distance between the first openings.

FIG. **28** is a top plan view illustrating a semiconductor device in accordance with example embodiments.

The semiconductor device of FIG. **28** may have elements and/or constructions substantially the same as or similar to those illustrated with reference to FIGS. **1** to **4** except for a dummy structure on a dummy region. Thus, detailed descriptions on repeated elements and/or structures are omitted herein, and like reference numerals are used to designate like elements

Referring to FIG. **28**, the dummy structure on the dummy region may include a second structure **170***b* having a stepped structure along the third direction, a second opening **172***b* extending through the second structure **170***b* and in the second direction, and a dummy source line **176***b* formed in the second opening **172***b*.

The second structure **170***b* may include insulating interlayer patterns and dummy patterns that may be alternately stacked.

The second opening **172***b* may extend in the second direction, and a plurality of the second openings **172***b* may be formed along the third direction. The second opening **172***b* may have different widths therein. The second structure **172***b* may be cut or intersected by the second opening **172***b*.

The dummy source line **176***b* may be disposed in the second opening **172***b*. An insulation pattern may be formed on a sidewall of the second opening **172***b*.

The dummy source line **176***b* may extend in the same direction as that of the CSL **144** on a cell region. The dummy source line **176***b* may have different widths according to a shape of the second opening **172***b*.

In example embodiments, the dummy source line **176***b* may have a shape in which a portion of a first width W**1** and a portion of a second width W**2** smaller than the first width W**1** may be repeated.

The dummy pattern may include the same material as that of a gate line on the cell region. In some embodiments, the dummy pattern at a certain level may include a conductive pattern formed of the same material as that of the gate line, and a second sacrificial pattern formed of a nitride. The dummy pattern at a certain level may only include the conductive pattern.

The semiconductor device of FIG. **28** may be manufactured by a method substantially the same as or similar to that illustrated with reference to FIGS. **23** and **24** except that the second opening **172***b* may be formed to have different widths.

FIG. **29** is a top plan view illustrating a semiconductor device in accordance with example embodiments.

The semiconductor device of FIG. **29** may have elements and/or constructions substantially the same as or similar to those illustrated with reference to FIGS. **1** to **4** except for a

dummy structure on a dummy region. Thus, detailed descriptions on repeated elements and/or structures are omitted herein, and like reference numerals are used to designate like elements.

Referring to FIG. **29**, the dummy structure on the dummy region may include a second structure **170***c* having a stepped structure along the third direction, a second opening **172***c* extending through the second structure **170***c* and in the second direction, and a dummy source line **176***c* formed in the second opening **172***c*.

The second structure **170***c* may include insulating interlayer patterns and dummy patterns that may be alternately stacked.

The second opening **172***c* may extend in the second direction, and a plurality of the second openings **172***c* may be formed along the third direction. The second opening **172***c* may have a width equal to or greater than that of a first opening **122**.

The dummy source line **176***c* may be disposed in the second opening **172***c*. An insulation pattern may be formed on a sidewall of the second opening **172***c*.

The dummy source line **176***c* may have a width in the third direction equal to or greater than that of the CSL **144** on a cell region. At least a portion of the dummy source lines **176***c* may have a width different from that of the CSL **144**.

In example embodiments, at least one dummy source line **176***c* may have a width W**3** greater than a width W**4** of the CSL **144**, and remaining dummy source lines **176***c* may have a width substantially the same as the width W**4** of the CSL **144**. In some embodiments, the dummy source lines **176***c* may have a width greater than the width W**4** of the CSL **144**.

The dummy pattern may include the same material as that of a gate line on the cell region. In some embodiments, the dummy pattern at a certain level may include a conductive pattern formed of the same material as that of the gate line, and a second sacrificial pattern formed of a nitride. The dummy pattern at a certain level may only include the conductive pattern.

The semiconductor device of FIG. **29** may be manufactured by a method substantially the same as or similar to that illustrated with reference to FIGS. **23** and **24** except that at least a portion of the second openings **172***c* may be formed to have a different width from a width of the first opening **122**.

FIG. **30** is a top plan view illustrating a semiconductor device in accordance with example embodiments.

The semiconductor device of FIG. **30** may have elements and/or constructions substantially the same as or similar to those illustrated with reference to FIGS. **1** to **4** except for a dummy structure on a dummy region. Thus, detailed descriptions on repeated elements and/or structures are omitted herein, and like reference numerals are used to designate like elements

Referring to FIG. **30**, the dummy structure on the dummy region may include second structures **180***a* and **180***b* having stepped structures along the third direction, second and third openings **182***a* and **182***b* extending through the second structures **180***a* and **180***b* and first and second dummy source lines **186***a* and **186***b* formed in the second opening **182***a* and the third opening **182***b*, respectively.

The second structures **180***a* and **180***b* may include insulating interlayer patterns and dummy patterns that may be alternately stacked.

The second opening **182***a* and the third opening **182***b* may have different orientations or different shapes.

In example embodiments, the second opening **182***a* may extend in the third direction. The third opening **182***b* may extend in a fourth direction diagonal to the second and third directions. Thus, the second structure **180***a* defined by the second openings **182***a* and the second structure **180***b* defined by the third openings **182***b* may also have different orientations or different shapes.

However, the shapes of the second and third openings **182***a* and **182***b* may not be specifically limited, and may be modified in consideration of a reduction of stress. In some embodiments, the second and third openings **182***a* and **182***b* may have any shape selected from those of the second openings illustrated in the above-described embodiments. The shapes of the second structures **180***a* and **180***b* may be also modified by constructions of the second and third openings **182***a* and **182***b*.

The dummy patterns may include substantially the same material as that of a gate line on a cell region.

The semiconductor device of FIG. **30** may be manufacture by a method substantially the same as or similar to those illustrated with reference to FIGS. **23** and **24** except that the second and third openings having various shapes may be formed on the dummy region.

FIG. **31** is a top plan view illustrating a semiconductor device in accordance with example embodiments.

Referring to FIG. **31**, the semiconductor device may include a memory cell structure on a cell region of a substrate **100**, and a dummy structure on a dummy region of the substrate **100**. A peripheral circuit region (abbreviated as Peri Region in FIG. **31**) may be located at an outside of the cell region and the dummy region.

A construction on the cell region and the dummy region may be selected from the embodiments as described above, e.g., as illustrated with reference to FIGS. **1** to **4**.

Peripheral circuits may be disposed on the peripheral circuit region of the substrate **100**. An insulating interlayer covering the peripheral circuits may be formed on the substrate **100**. The insulating interlayer may be a portion of the lower insulation layer **108** illustrated in FIGS. **2** and **4**.

A dummy conductive pattern **190** may be formed through the insulating interlayer. The dummy conductive pattern **190** may extend to a top surface of the substrate **100**. The dummy conductive pattern **190** may be formed together with the CSL **144** and a dummy source line **146**. Thus, the dummy conductive pattern **190**, the CSL **144** and the dummy source line **146** may include the same conductive material.

In example embodiments, the dummy conductive pattern **190** may extend in the third direction. In some embodiments, the dummy conductive pattern **190** may extend in the second direction or the fourth direction.

In example embodiments, widths of the dummy conductive patterns **190** may be the same or different.

The dummy conductive patterns **190** may have various shapes. In example embodiments, the dummy conductive pattern **190** may have any shape of the dummy source lines as described above. A stress imposed on the cell region may be further reduced by the conductive patterns **190**.

In a manufacture of the semiconductor device illustrated in FIG. **31**, the peripheral circuits may be formed on the peripheral circuit region of the substrate **100**. The peripheral circuit may include transistors.

Subsequently, processes substantially the same as or similar to FIGS. **5** to **13** may be performed to obtain the semiconductor device of FIG. **31**. In the processes, a third opening **188** may be formed through the insulating interlayer on the peripheral circuit region while forming first and second openings **122** and **124**. Thus, the dummy conductive pattern **190** may be formed in the third opening **188** while forming the CSL **144** and the dummy source line **146**.

According to example embodiments, a dummy source line may be formed on a dummy region. A configuration or a shape of the dummy source line may be different from that of a common source line on a cell region. Thus, a stress imposed on the cell region may be dispersed and reduced while forming the common source line. At least a portion of dummy patterns may include the same conductive material as that included in gate lines. Thus, a nitride from sacrificial patterns may be fully removed or an amount of the nitride may be decreased, so a stress from the nitride may be also reduced. Therefore, stress-related defects in a semiconductor device may be suppressed.

In example embodiments, a nonvolatile memory may be embodied to include a three dimensional (3D) memory array. The 3D memory array may be monolithically formed on a substrate (e.g., semiconductor substrate such as silicon, or semiconductor-on-insulator substrate). The 3D memory array may include two or more physical levels of memory cells having an active area disposed above the substrate and circuitry associated with the operation of those memory cells, whether such associated circuitry is above or within such substrate. The layers of each level of the array may be directly deposited on the layers of each underlying level of the array.

In example embodiments, the 3D memory array may include vertical NAND strings that are vertically oriented such that at least one memory cell is located over another memory cell. The at least one memory cell may comprise a charge trap layer.

The following patent documents, which are hereby incorporated by reference in their entirety, describe suitable configurations for three-dimensional memory arrays, in which the three-dimensional memory array is configured as a plurality of levels, with word lines and/or bit lines shared between levels: U.S. Pat. Nos. 7,679,133; 8,553,466; 8,654,587; 8,559,235; and U.S. Pat. Pub. No. 2011/0233648.

Example embodiments have been disclosed herein, and although specific terms are employed, they are used and are to be interpreted in a generic and descriptive sense only and not for purpose of limitation. In some instances, as would be apparent to one of ordinary skill in the art as of the filing of the present application, features, characteristics, and/or elements described in connection with a particular embodiment may be used singly or in combination with features, characteristics, and/or elements described in connection with other embodiments unless otherwise specifically indicated. Accordingly, it will be understood by those of skill in the art that various changes in form and details may be made without departing from the spirit and scope of the present invention as set forth in the following claims.

What is claimed is:

1. A semiconductor device, comprising:

a substrate including a cell region and a dummy region;

first channel structures on the cell region of the substrate, the first channel structures extending in a first direction vertical with respect to a top surface of the substrate;

gate lines surrounding outer sidewalls of the first channel structures and extending in a second direction parallel to the top surface of the substrate, the gate lines being spaced apart from each other along the first direction;

cutting lines between the gate lines on the cell region, the cutting lines extending in the second direction;

dummy patterns spaced apart from each other along the first direction on the dummy region, the dummy patterns having a stepped shape along a third direction parallel to the top surface of the substrate and perpendicular to the second direction, at least a portion of the dummy patterns including a same conductive material as that included in the gate lines; and

dummy lines extending through the dummy patterns, the dummy lines having a different configuration than the cutting lines in a top view.

2. The semiconductor device as claimed in claim **1**, wherein the dummy region is adjacent to an end portion of the cell region in the third direction.

3. The semiconductor device as claimed in claim **1**, wherein the dummy lines include a same conductive material as that included in the cutting lines.

4. The semiconductor device as claimed in claim **1**, wherein the dummy lines extend in the third direction and perpendicularly to the cutting lines.

5. The semiconductor device as claimed in claim **4**, wherein a distance between the dummy lines is equal to or greater than a distance between the cutting lines.

6. The semiconductor device as claimed in claim **4**, wherein:

at least one of the dummy patterns includes conductive patterns spaced apart in the second direction, and a sacrificial pattern interposed between the conductive patterns, and

the conductive patterns include a same conductive material as that of the gate lines, and the sacrificial pattern includes a nitride.

7. The semiconductor device as claimed in claim **1**, wherein the dummy lines extend in a fourth direction diagonal to the second direction.

8. The semiconductor device as claimed in claim **1**, wherein the dummy lines extend in the second direction.

9. The semiconductor device as claimed in claim **8**, wherein a first portion of the dummy patterns includes a same conductive material as that of the gate lines, and a second portion of the dummy patterns different than the first portion includes a conductive pattern and a sacrificial pattern, the conductive pattern including the conductive material and the sacrificial pattern including a nitride.

10. The semiconductor device as claimed in claim **1**, wherein the dummy patterns are positioned at corresponding levels of the gate lines.

11. The semiconductor device as claimed in claim **1**, further comprising insulating interlayer patterns between the dummy patterns neighboring in the first direction and between the gate lines neighboring in the first direction.

12. The semiconductor device as claimed in claim **1**, wherein the cutting lines are common source lines, and the dummy lines are dummy source lines having a different shape or direction from the common source lines, as viewed in the top view.

13. The semiconductor device as claimed in claim **1**, further comprising a third channel structure extending through the dummy patterns on the dummy region of the substrate.

14. The semiconductor device as claimed in claim **1**, further comprising a dummy cell on a portion of the cell region adjacent to the dummy region.

15. A semiconductor device, comprising:

a substrate including a cell region and a dummy region;

first channel structures on the cell region of the substrate, the first channel structures extending in a first direction vertical with respect to a top surface of the substrate;

gate lines surrounding outer sidewalls of the first channel structures and extending in a second direction parallel to the top surface of the substrate, the gate lines being spaced apart from each other along the first direction;

first insulating interlayer patterns between gate lines neighboring to each other in the first direction;

cutting lines interposed between the gate lines on the cell region, the cutting lines extending in the second direction;

dummy patterns spaced apart from each other along the first direction on the dummy region, the dummy patterns having a stepped shape along a third direction parallel to the top surface of the substrate and perpendicular to the second direction, at least a portion of the dummy patterns including a same conductive material as that included in the gate lines;

second insulating interlayer patterns between dummy patterns neighboring each other in the first direction; and

dummy lines extending through the dummy patterns and the second insulating interlayer patterns, the dummy lines having a different configuration than the cutting lines in a top view.

16. A semiconductor device, comprising:

a substrate including a cell region and a dummy region;

first channel structures on the cell region of the substrate, the first channel structures extending in a first direction vertical with respect to a top surface of the substrate;

gate lines surrounding outer sidewalls of the first channel structures and extending in a second direction parallel to the top surface of the substrate, the gate lines being spaced apart from each other along the first direction;

common source lines between the gate lines on the cell region, the common source lines extending in the second direction;

dummy patterns spaced apart from each other along the first direction on the dummy region, the dummy patterns having a stepped shape along a third direction parallel to the top surface of the substrate and perpendicular to the second direction, at least a portion of the dummy patterns including a same conductive material as that included in the gate lines; and

dummy source lines extending through the dummy patterns, the dummy source lines having a different direction or shape than the common source lines in a top view.

17. The semiconductor device as claimed in claim **16**, wherein the dummy source lines extend from an outermost side of the dummy region toward the cell region in a different direction than the common source lines, as viewed in the top view.

18. The semiconductor device as claimed in claim **17**, wherein a distance between neighboring dummy source lines is greater than a distance between neighboring common source lines.

19. The semiconductor device as claimed in claim **17**, wherein the dummy source lines and the common source lines include a same conductive material.

20. The semiconductor device as claimed in claim **16**, wherein the dummy source lines are a plurality of dummy source line segments spaced apart from each other in at least one of the second and third directions.

* * * * *