US010121529B2

(12) **United States Patent**
Lee

(10) **Patent No.: US 10,121,529 B2**
(45) **Date of Patent: Nov. 6, 2018**

(54) **SEMICONDUCTOR MEMORY DEVICE FOR APPLYING DIFFERENT BIAS VOLTAGES AND OPERATING METHOD THEREOF**

(71) Applicant: **SK hynix Inc.**, Icheon-si, Gyeonggi-do (KR)

(72) Inventor: **Hee Youl Lee**, Icheon-si (KR)

(73) Assignee: **SK hynix Inc.**, Icheon-si, Gyeonggi-do (KR)

(*) Notice: Subject to any disclaimer, the term of this patent is extended or adjusted under 35 U.S.C. 154(b) by 0 days.

(21) Appl. No.: **15/633,417**

(22) Filed: **Jun. 26, 2017**

(65) **Prior Publication Data**

US 2018/0082731 A1 Mar. 22, 2018

(30) **Foreign Application Priority Data**

Sep. 22, 2016 (KR) 10-2016-0121655

(51) **Int. Cl.**

G11C 16/04	(2006.01)
G11C 11/4074	(2006.01)
H01L 27/105	(2006.01)
H01L 27/06	(2006.01)
H01L 29/76	(2006.01)
G11C 16/08	(2006.01)
G11C 16/30	(2006.01)
G11C 7/10	(2006.01)
G11C 29/34	(2006.01)

(52) **U.S. Cl.**

CPC ***G11C 11/4074*** (2013.01); ***G11C 7/1051*** (2013.01); ***G11C 16/08*** (2013.01); ***G11C 16/30*** (2013.01); ***G11C 29/34*** (2013.01); ***H01L 27/0688*** (2013.01); ***H01L 27/105*** (2013.01); ***H01L 29/76*** (2013.01)

(58) **Field of Classification Search**

CPC ... G11C 11/4074; G11C 7/1051; G11C 16/08; G11C 16/30

USPC 365/185.17, 185.11, 185.25

See application file for complete search history.

(56) **References Cited**

U.S. PATENT DOCUMENTS

2010/0142285 A1* 6/2010 Aritome G11C 16/3418 365/185.24
2013/0064029 A1* 3/2013 Park G11C 7/12 365/203
2015/0221380 A1* 8/2015 Lee G11C 16/10 365/185.11

FOREIGN PATENT DOCUMENTS

KR 1020130027686 A 3/2013
KR 1020150007397 A 1/2015

(Continued)

Primary Examiner — Vu Le

(74) *Attorney, Agent, or Firm* — William Park & Associates Ltd.

(57) **ABSTRACT**

A semiconductor memory device and an operating method thereof. The semiconductor memory device includes a memory cell array, a peripheral circuit and a control logic. The memory cell array includes a plurality of memory cells. The peripheral circuit performs a program operation for the plurality of memory cells in the memory cell array. The control logic controls the peripheral circuit and the memory cell array such that, during the program operation for the plurality of memory cells, pre-bias voltages are applied to a plurality of word lines coupled to the plurality of memory cells to precharge channel regions of the plurality of memory cells. Furthermore, different pre-bias voltages are applied to the plurality of word lines depending on the relative positions of the word lines.

19 Claims, 12 Drawing Sheets

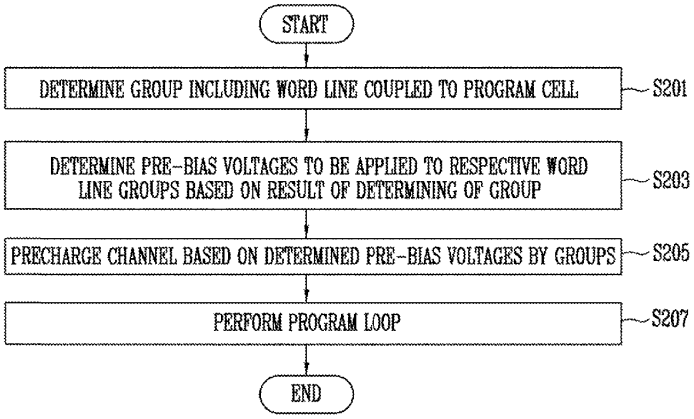

(56) **References Cited**

FOREIGN PATENT DOCUMENTS

KR	1020170111653	A	10/2017
KR	1020170121618	A	11/2017

* cited by examiner

FIG. 1

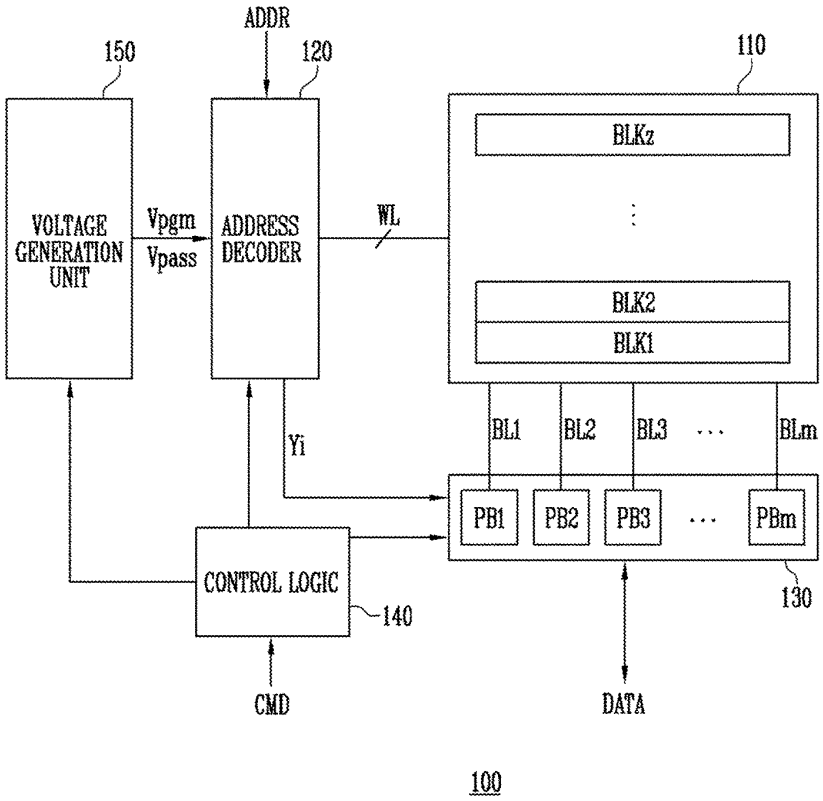
ADDR
150
120
110
VOLTAGE GENERATION UNIT
Vpgm
Vpass
ADDRESS DECODER
WL
BLKz
BLK2
BLK1
Yi
BL1
BL2
BL3
BLm
PB1
PB2
PB3
PBm
CONTROL LOGIC
140
130
CMD
DATA
100

FIG. 2

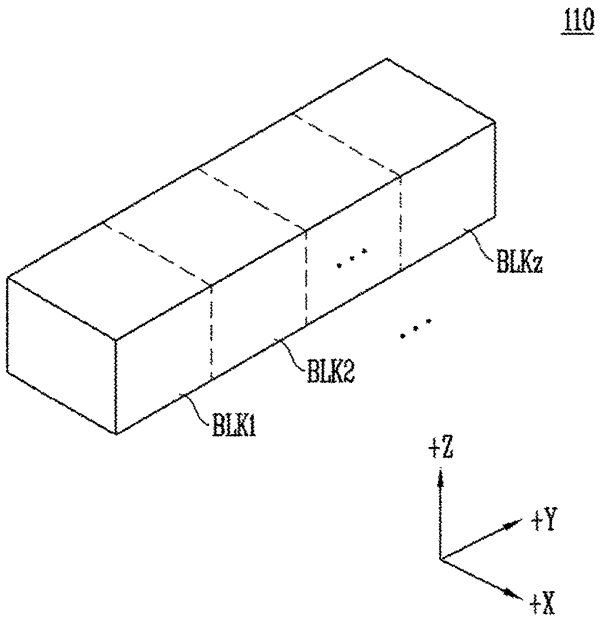

FIG. 3

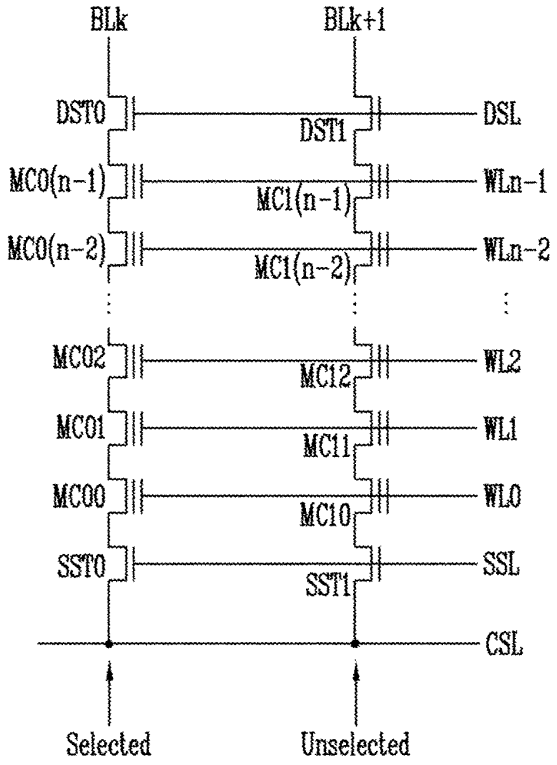
BLk
BLk+1
DST0
DST1
DSL
MC0(n-1)
MC1(n-1)
WLn-1
MC0(n-2)
MC1(n-2)
WLn-2
MC02
MC12
WL2
MC01
MC11
WL1
MC00
MC10
WL0
SST0
SST1
SSL
CSL
Selected
Unselected

FIG. 4A

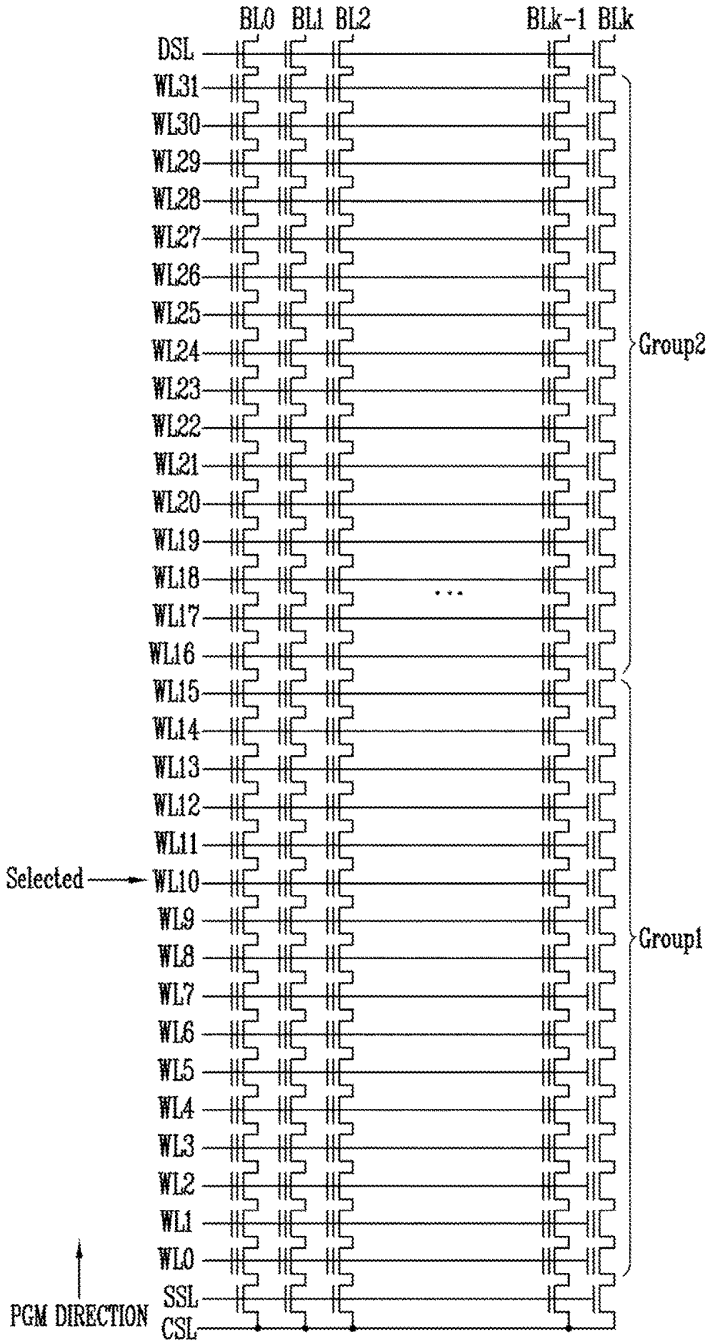
BL0 BL1 BL2
BLk-1 BLk
DSL
WL31
WL30
WL29
WL28
WL27
WL26
WL25
WL24
WL23
WL22
WL21
WL20
WL19
WL18
WL17
WL16
WL15
WL14
WL13
WL12
WL11
Selected
WL10
WL9
WL8
WL7
WL6
WL5
WL4
WL3
WL2
WL1
WL0
SSL
CSL
PGM DIRECTION
Group2
Group1

FIG. 4B

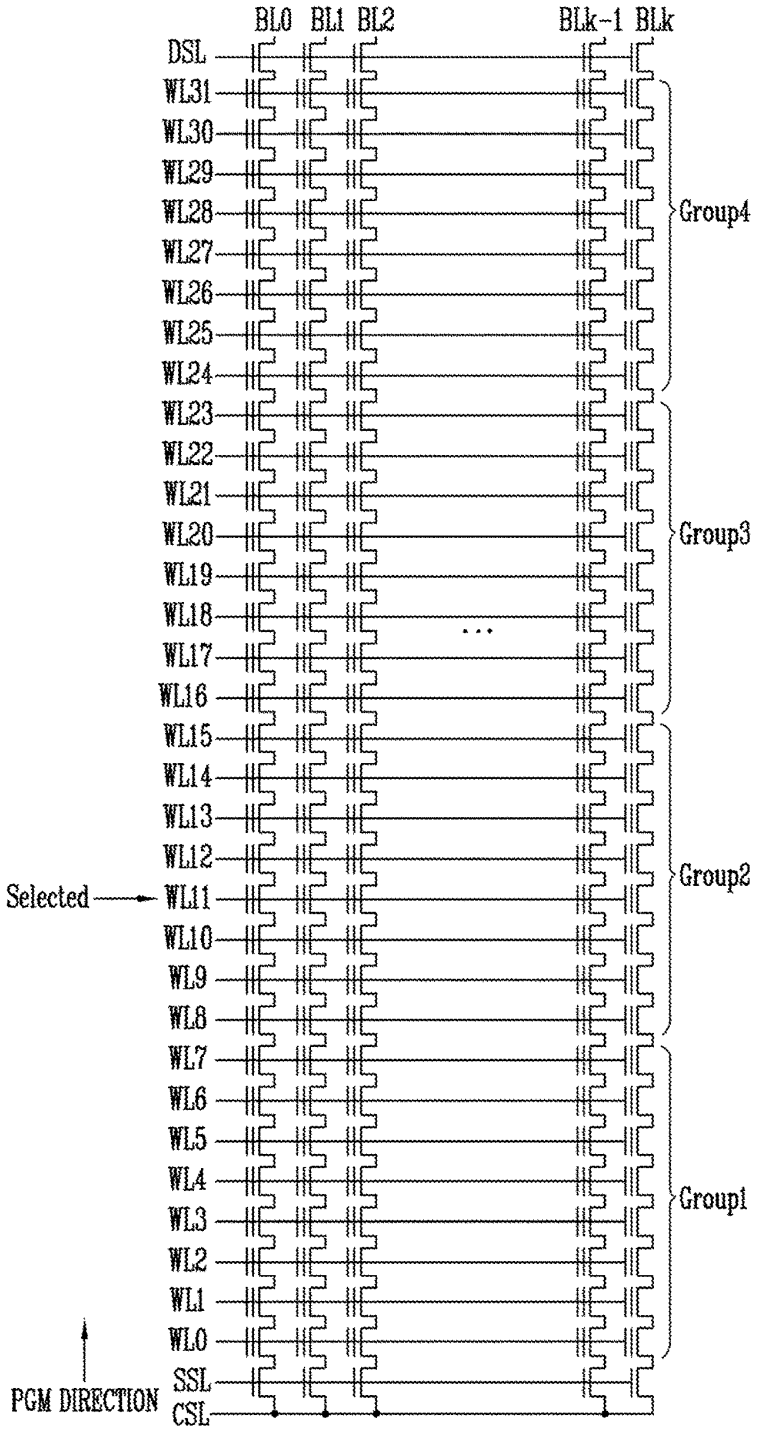
BL0
BL1
BL2
BLk-1
BLk
DSL
WL31
WL30
WL29
WL28
WL27
WL26
WL25
WL24
WL23
WL22
WL21
WL20
WL19
WL18
WL17
WL16
WL15
WL14
WL13
WL12
Selected
WL11
WL10
WL9
WL8
WL7
WL6
WL5
WL4
WL3
WL2
WL1
WL0
SSL
CSL
PGM DIRECTION
Group4
Group3
Group2
Group1

FIG. 4C

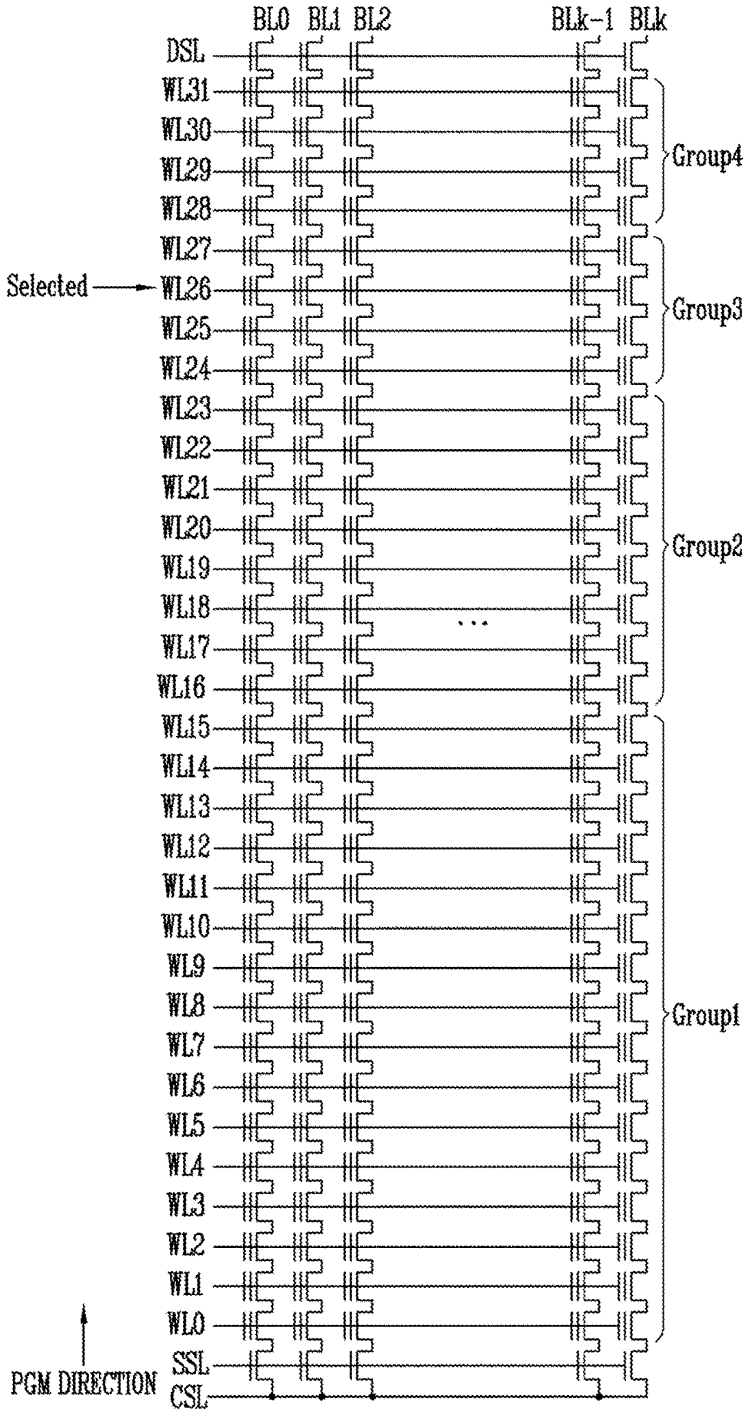
BL0
BL1
BL2
BLk-1
BLk
DSL
WL31
WL30
WL29
WL28
WL27
Selected
WL26
WL25
WL24
WL23
WL22
WL21
WL20
WL19
WL18
WL17
WL16
WL15
WL14
WL13
WL12
WL11
WL10
WL9
WL8
WL7
WL6
WL5
WL4
WL3
WL2
WL1
WL0
SSL
CSL
PGM DIRECTION
Group4
Group3
Group2
Group1

FIG. 5A

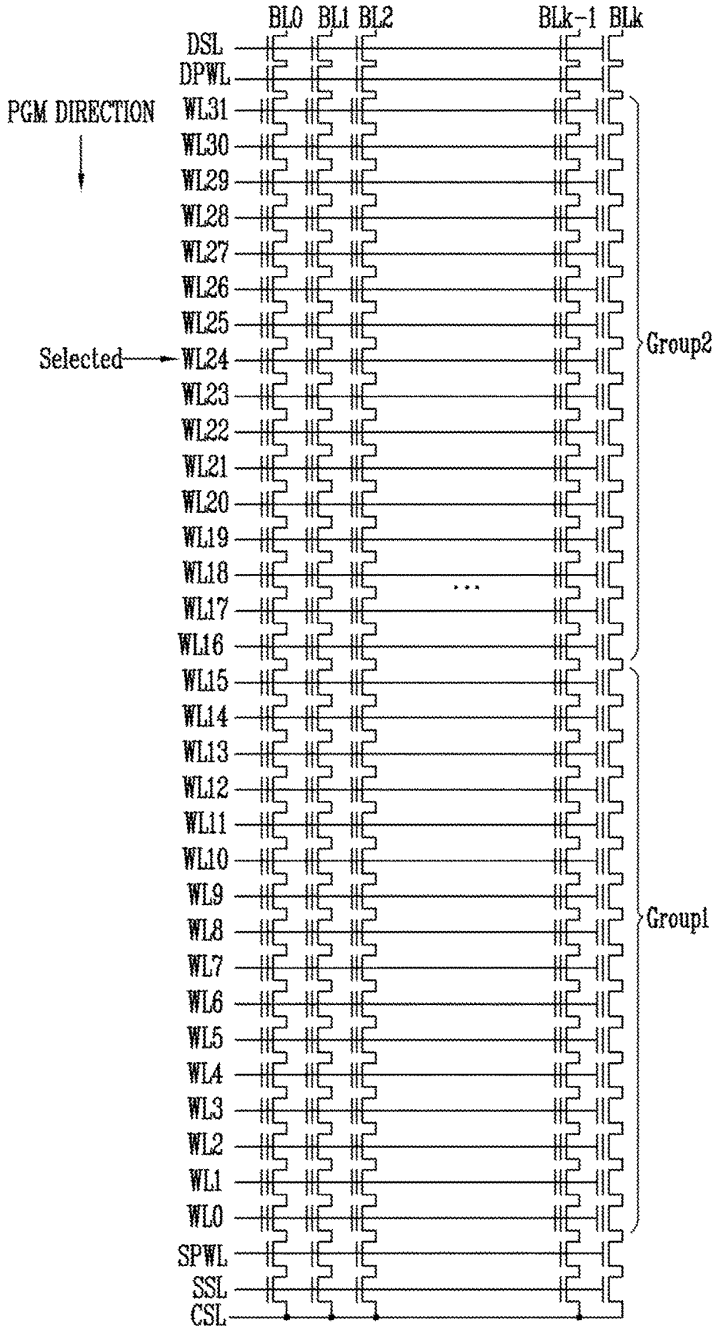
BL0 BL1 BL2
BLk-1 BLk
DSL
DPWL
PGM DIRECTION
WL31
WL30
WL29
WL28
WL27
WL26
WL25
Selected
WL24
WL23
WL22
WL21
WL20
WL19
WL18
WL17
WL16
WL15
WL14
WL13
WL12
WL11
WL10
WL9
WL8
WL7
WL6
WL5
WL4
WL3
WL2
WL1
WL0
SPWL
SSL
CSL
Group2
Group1

FIG. 5B

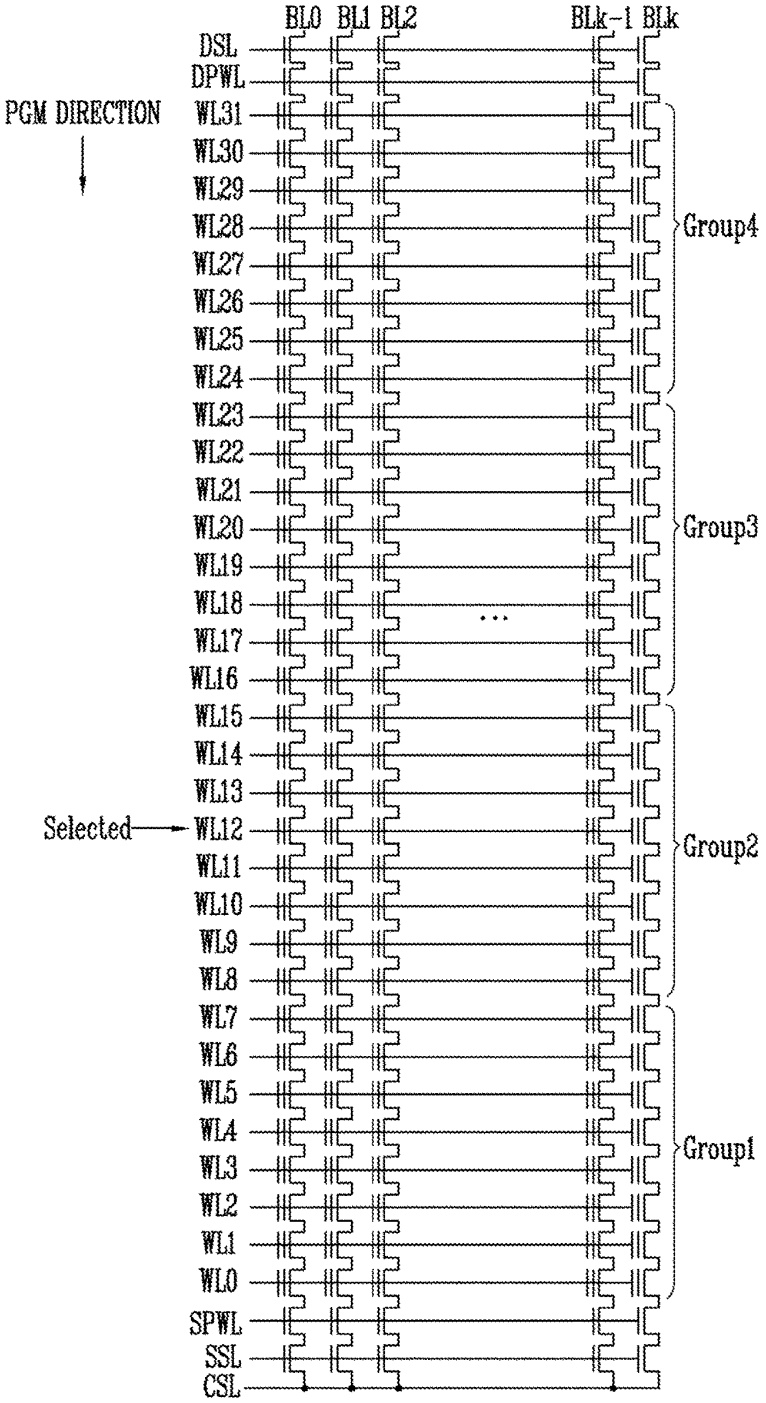
BL0 BL1 BL2
BLk-1 BLk
DSL
DPWL
PGM DIRECTION
WL31
WL30
WL29
WL28
WL27
WL26
WL25
WL24
WL23
WL22
WL21
WL20
WL19
WL18
WL17
WL16
WL15
WL14
WL13
Selected
WL12
WL11
WL10
WL9
WL8
WL7
WL6
WL5
WL4
WL3
WL2
WL1
WL0
SPWL
SSL
CSL
Group4
Group3
Group2
Group1

FIG. 6

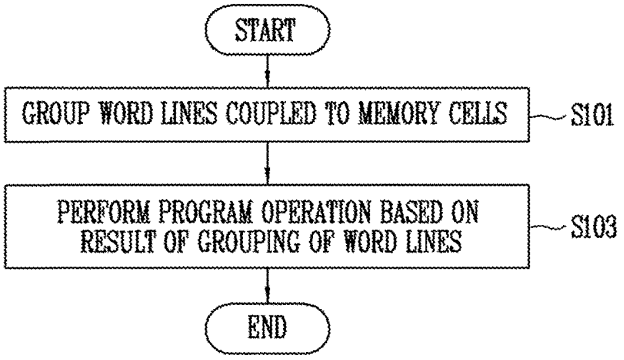
START
GROUP WORD LINES COUPLED TO MEMORY CELLS
S101
PERFORM PROGRAM OPERATION BASED ON RESULT OF GROUPING OF WORD LINES
S103
END

FIG. 7

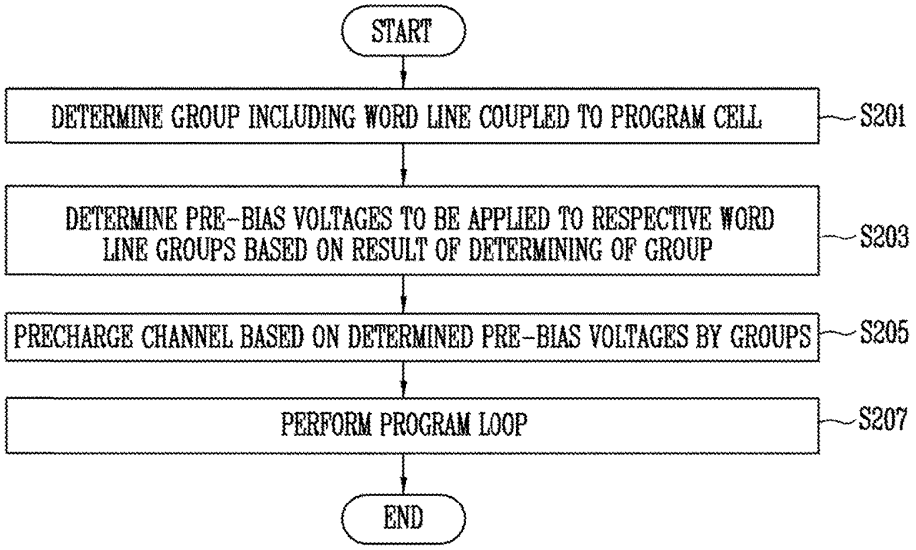
START
DETERMINE GROUP INCLUDING WORD LINE COUPLED TO PROGRAM CELL
S201
DETERMINE PRE-BIAS VOLTAGES TO BE APPLIED TO RESPECTIVE WORD LINE GROUPS BASED ON RESULT OF DETERMINING OF GROUP
S203
PRECHARGE CHANNEL BASED ON DETERMINED PRE-BIAS VOLTAGES BY GROUPS
S205
PERFORM PROGRAM LOOP
S207
END

FIG. 8

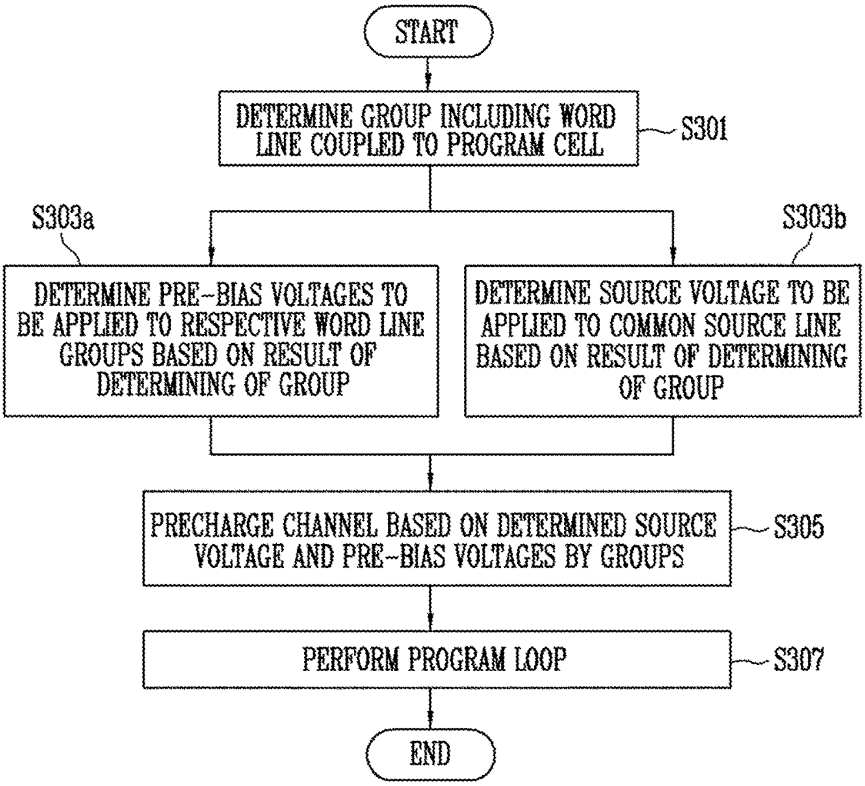
START
DETERMINE GROUP INCLUDING WORD LINE COUPLED TO PROGRAM CELL
S301
S303a
S303b
DETERMINE PRE-BIAS VOLTAGES TO BE APPLIED TO RESPECTIVE WORD LINE GROUPS BASED ON RESULT OF DETERMINING OF GROUP
DETERMINE SOURCE VOLTAGE TO BE APPLIED TO COMMON SOURCE LINE BASED ON RESULT OF DETERMINING OF GROUP
PRECHARGE CHANNEL BASED ON DETERMINED SOURCE VOLTAGE AND PRE-BIAS VOLTAGES BY GROUPS
S305
PERFORM PROGRAM LOOP
S307
END

FIG. 9

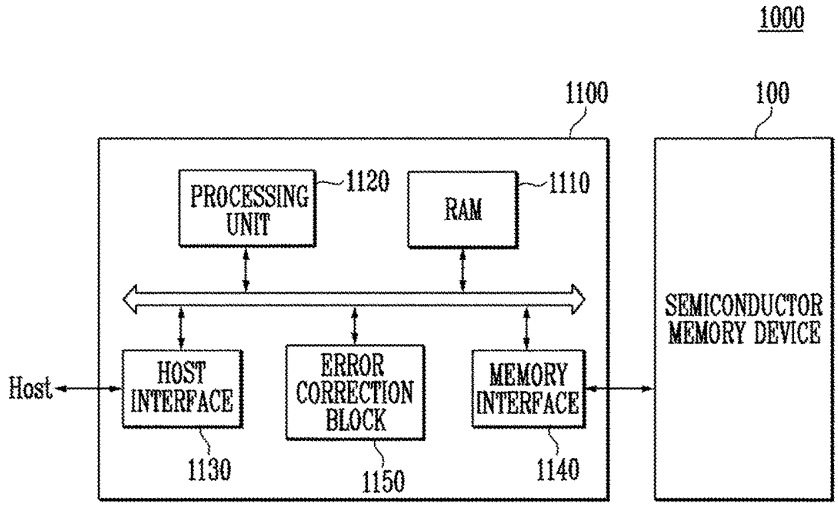
1000
1100
100
PROCESSING UNIT
1120
RAM
1110
SEMICONDUCTOR MEMORY DEVICE
Host
HOST INTERFACE
ERROR CORRECTION BLOCK
MEMORY INTERFACE
1130
1150
1140

FIG. 10

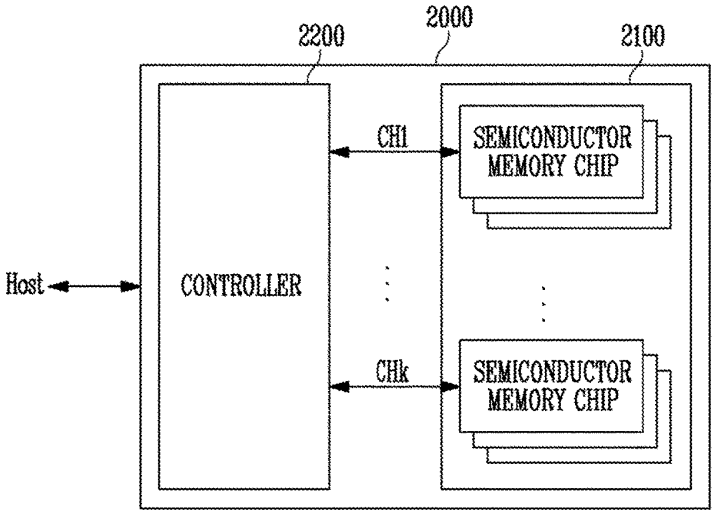
2000
2200
2100
CH1
SEMICONDUCTOR MEMORY CHIP
Host
CONTROLLER
CHk
SEMICONDUCTOR MEMORY CHIP

FIG. 11

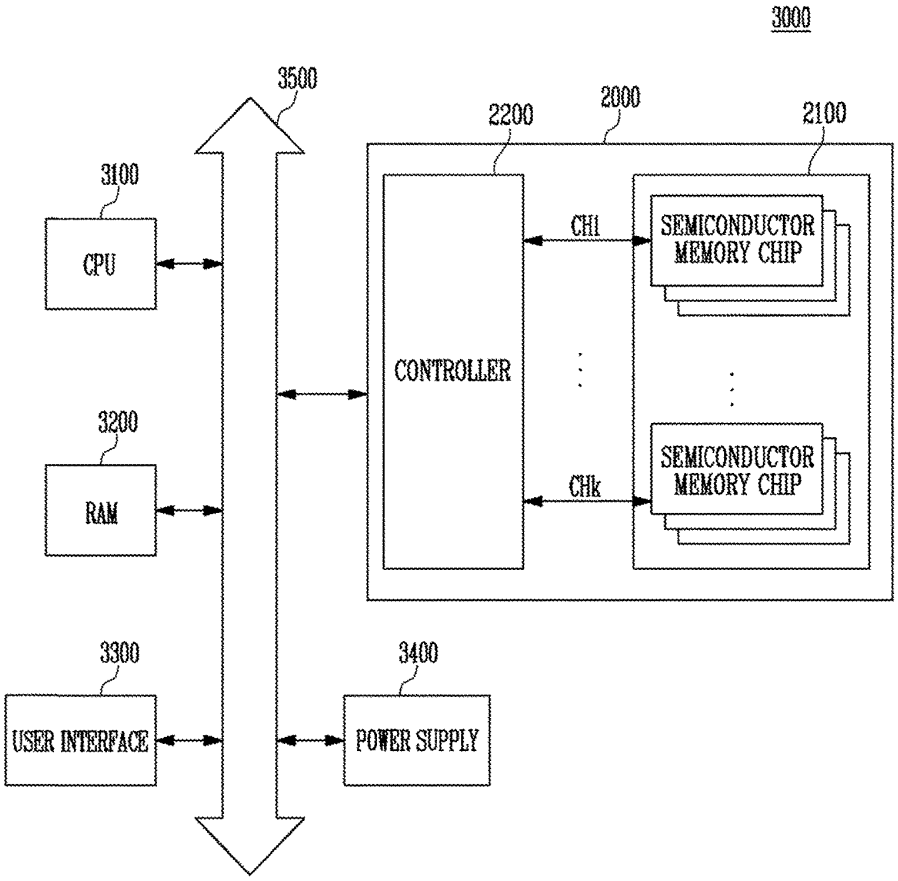
3000
3500
2200
2000
2100
3100
CPU
CH1
SEMICONDUCTOR MEMORY CHIP
CONTROLLER
3200
RAM
CHk
SEMICONDUCTOR MEMORY CHIP
3300
USER INTERFACE
3400
POWER SUPPLY

SEMICONDUCTOR MEMORY DEVICE FOR APPLYING DIFFERENT BIAS VOLTAGES AND OPERATING METHOD THEREOF

CROSS-REFERENCE TO RELATED APPLICATION

The present application claims priority under 35 U.S.C § 119(a) to Korean patent application 10-2016-0121655, filed on Sep. 22, 2016 in the Korean Intellectual Property Office, the entire disclosure of which is incorporated herein by reference in its entirety as though fully set forth herein.

BACKGROUND

The present invention relates generally to an electronic device, and more particularly, to a semiconductor memory device and an operating method thereof.

Semiconductor devices, in particular semiconductor memory devices, are classified into volatile memory devices and nonvolatile memory devices.

The nonvolatile memory devices can maintain data stored therein even when supply of power is interrupted, although read and write speeds are comparatively low. Therefore, the nonvolatile memory device is used when there is the need for storing data which must be maintained regardless of supply of power. Representative examples of the nonvolatile memory device include a read-only memory (ROM), a mask ROM (MROM), a programmable ROM (PROM), an erasable programmable ROM (EPROM), an electrically erasable programmable ROM (EEPROM), a flash memory, a phase-change random access memory (PRAM), a magnetic RAM (MRAM), a resistive RAM (RRAM), a ferroelectric RAM (FRAM), etc. The flash memory is classified into a NOR type memory and a NAND type memory.

Flash memory devices may be classified into a two-dimensional semiconductor device, in which strings are horizontally formed on a semiconductor substrate, and a three-dimensional semiconductor device in which strings are vertically formed on a semiconductor substrate. Three-dimensional semiconductor memory devices are memory devices that overcome the limitation in the degree of integration of two-dimensional semiconductor memory devices, and include a plurality of strings that are vertically formed on a semiconductor substrate. Each string includes a drain select transistor, a plurality of memory cells, and a source select transistor that are coupled in series between a bit line and a common source line (SL).

SUMMARY

Various embodiments in accordance with the present invention are directed toward a semiconductor memory device configured to mitigate a program disturb phenomenon, and a method of operating the semiconductor memory device.

In an embodiment in accordance with the present invention, a semiconductor memory device includes a memory cell array, a peripheral circuit and a control logic. The memory cell array includes a plurality of memory cells. The peripheral circuit performs a program operation for the plurality of memory cells in the memory cell array. The control logic controls the peripheral circuit and the memory cell array such that, during the program operation for the plurality of memory cells, pre-bias voltages are applied to a plurality of word lines coupled to the plurality of memory cells to precharge channel regions of the plurality of memory

cells. Furthermore, different pre-bias voltages are applied to the plurality of word lines depending on the respective positions of the word lines.

In an embodiment, the word lines may be grouped into a plurality of word line groups. Furthermore, the closer a word line group to which a word line belongs is to a first-programmed memory cell in the memory cell array, the lower a pre-bias voltage to be applied to the word line may be.

In an embodiment, the word lines may be grouped into a plurality of word line groups. In this case, the memory cells may be programmed in a sequence from a memory cell adjacent to a source select transistor. Furthermore, the closer a word line group to which a word line belongs is to a drain select transistor in the memory cell array, the higher a pre-bias voltage to be applied to the word line may be.

In an embodiment, each of the word line groups may include the same number of word lines.

In accordance with one aspect, the closer a word line group is to a source select transistor in the memory cell array, the more the number of word lines included in the word line group may be.

Pre-bias voltages that are applied to word lines of a word line group to which a word line coupled to a program cell belongs may have a default value, and pre-bias voltages that are applied to word lines disposed between the word line group to which the word line coupled to the program cell belongs, and the source select transistor, may also have the default value.

The control logic may determine a precharge voltage to be applied to a common source line based on a position of a program cell.

In an embodiment in accordance with the present invention, the control logic may control the peripheral circuit and the memory cell array such that the closer the program cell is to the source select transistor, the higher a precharge voltage to be applied to the common source line is.

The word lines may be grouped into a plurality of word line groups, and the memory cells may be programmed in a sequence from a memory cell adjacent to a drain select transistor. In this case, the closer a word line group to which a word line belongs is to a source select transistor in the memory cell array, the higher a pre-bias voltage to be applied to the word line may be.

Pre-bias voltages that are applied to word lines of a word line group to which a word line coupled to a program cell belongs may have a default value, and pre-bias voltages that are applied to word lines disposed between the word line group to which the word line coupled to the program cell belongs, and the drain select transistor, may also have the default value.

In an embodiment, the control logic may determine a precharge voltage to be applied to a common source line based on a position of a program cell, and control the peripheral circuit and the memory cell array such that the closer the program cell is to the drain select transistor, the higher a precharge voltage to be applied to the common source line is.

The control logic may control the peripheral circuit and the memory cell array such that a program loop for a selected program cell is performed after the application of the pre-bias voltages.

In another embodiment in accordance with the present invention, an operating method of a semiconductor memory device includes grouping a plurality of word lines coupled to a plurality of memory cells in a memory cell array into a plurality of word line groups; applying, based on a result of

the grouping of the word lines, different pre-bias voltages to the respective word line groups to which the word lines belong, depending on a position of a word line group to which a selected program word line belongs, and precharging channel regions of the memory cells; and performing a program operation for a selected program cell among the memory cells.

In an embodiment, the applying, based on the result of the grouping of the word lines, the different pre-bias voltages to the respective word line groups to which the word lines belong, depending on the position of the word line group to which a selected program word line belongs, and the precharging of the channel regions of the memory cells may include applying the pre-bias voltages to the respective word line groups such that the closer a word line group to which a word line belongs is to a first programmed memory cell in the memory cell array, the lower a pre-bias voltage to be applied to the word line is.

In accordance with one aspect, the memory cells are programmed in a sequence from a memory cell adjacent to a drain select transistor. Furthermore, the applying, based on the result of the grouping of the word lines, the different pre-bias voltages to the respective word line groups to which the word lines belong, depending on the position of the word line group to which the selected program word line belongs, and the precharging of the channel regions of the memory cells may include: applying the pre-bias voltages to the respective word line groups such that the closer a word line group to which a word line belongs is to a drain select transistor in the memory cell array, the higher a pre-bias voltage to be applied to the word line is.

The grouping of the word lines coupled to the memory cells in the memory cell array into the word line groups may include: grouping the word lines such that each of the word line groups includes the same number of word lines.

The grouping of the word lines coupled to the memory cells in the memory cell array into the word line groups may include: grouping the word lines such that the closer a word line group is to the source select transistor in the memory cell array, the more the number of word lines included in the word line group is.

In an embodiment, the applying, based on the result of the grouping of the word lines, the different pre-bias voltages to the respective word line groups to which the word lines belong, depending on the position of the word line group to which the selected program word line belongs, and the precharging of the channel regions of the memory cells may include: determining a precharge voltage to be applied to a common source line such that the closer the program cell is to a first-programmed memory cell in the memory cell array, the higher the precharge voltage is.

In an embodiment, the determining the precharge voltage to be applied to the common source line such that the closer the program cell is to the first-programmed memory cell in the memory cell array, the higher the precharge voltage is may include: determining a precharge voltage to be applied to the common source line such that the closer the program cell is to the source select transistor, the higher the precharge voltage is.

In one aspect, the memory cells may be programmed in a sequence from a memory cell adjacent to a drain select transistor. Furthermore, the applying, based on the result of the grouping of the word lines, the different pre-bias voltages to the respective word line groups to which the word lines belong, depending on the position of the word line group to which the selected program word line belongs, and the precharging of the channel regions of the memory cells may include: applying the pre-bias voltages to the respective word line groups such that the closer a word line group to which a word line belongs is to a source select transistor in the memory cell array, the higher a pre-bias voltage to be applied to the word line is.

In an embodiment, the applying, based on the result of the grouping of the word lines, the different pre-bias voltages to the respective word line groups to which the word lines belong, depending on the position of the word line group to which the selected program word line belongs, and the precharging of channel regions of the memory cells may include: determining a precharge voltage to be applied to a common source line such that the closer the program cell is to the drain select transistor, the higher the precharge voltage is.

BRIEF DESCRIPTION OF THE DRAWINGS

Example embodiments will now be described more fully hereinafter with reference to the accompanying drawings; however, they may be embodied in different forms and should not be construed as limited to the embodiments set forth herein. Rather, these embodiments are provided so that this disclosure will be thorough and complete, and will fully convey the scope of the example embodiments to those skilled in the art.

In the drawing figures, dimensions may be exaggerated for clarity of illustration. It will be understood that when an element is referred to as being "between" two elements, it can be the only element between the two elements, or one or more intervening elements may also be present. Like reference numerals refer to like elements throughout.

FIG. **1** is a block diagram illustrating a semiconductor memory device in an embodiment in accordance with the present invention;

FIG. **2** is a block diagram for describing an embodiment of the memory cell array of FIG. **1**;

FIG. **3** is a circuit diagram illustrating portions of cell strings in the memory cell array;

FIG. **4**A is a diagram illustrating a method of grouping a plurality of word lines and applying pre-bias voltages thereto, in an embodiment in accordance with the present invention;

FIG. **4**B is a diagram illustrating a method of grouping a plurality of word lines and applying pre-bias voltages thereto, in another embodiment in accordance with the present invention;

FIG. **4**C is a diagram illustrating a method of grouping a plurality of word lines and applying pre-bias voltages thereto, in yet another embodiment in accordance with the present invention;

FIG. **5**A is a diagram illustrating a method of grouping a plurality of word lines and applying pre-bias voltages thereto, in still another embodiment in accordance with the present invention;

FIG. **5**B is a diagram illustrating a method of grouping a plurality of word lines and applying pre-bias voltages thereto, in still another embodiment in accordance with the present invention;

FIG. **6** is a flowchart showing a method of programming the semiconductor memory device in an embodiment in accordance with the present invention;

FIG. **7** is a flowchart illustrating the step of performing a program operation, based on a result of grouping the word lines of FIG. **6**;

FIG. **8** is a flowchart illustrating the step of performing the program operation, based on the result of grouping the word lines of FIG. **6**;

FIG. **9** is a block diagram for describing an embodiment of a memory system including the semiconductor memory device of FIG. **1**;

FIG. **10** is a block diagram for describing another embodiment of a memory system including the semiconductor memory device of FIG. **1**; and

FIG. **11** is a block diagram illustrating a computing system including the memory system of FIG. **10**.

DETAILED DESCRIPTION

Hereinafter, embodiments will be described in greater detail with reference to the accompanying drawings. Embodiments are described herein with reference to cross-sectional illustrations that are schematic illustrations of embodiments (and intermediate structures). As such, variations from the shapes of the illustrations as a result, for example, of manufacturing techniques and/or tolerances, are to be expected. Thus, embodiments should not be construed as limited to the particular shapes of regions illustrated herein but may include deviations in shapes that result, for example, from manufacturing. In the drawings, lengths and sizes of layers and regions may be exaggerated for clarity. Like reference numerals in the drawings denote like elements.

Terms such as 'first' and 'second' may be used to describe various components, but they should not limit the various components. Those terms are only used for the purpose of differentiating a component from other components. For example, a first component may be referred to as a second component, and a second component may be referred to as a first component and so forth without departing from the spirit and scope of the present disclosure. Furthermore, 'and/or' may include any one of or a combination of the components mentioned.

Furthermore, a singular form may include a plural from as long as it is not specifically mentioned in a sentence. Furthermore, "include/comprise" or "including/comprising" used in the specification represents that one or more components, steps, operations, and elements exist or are added.

Furthermore, unless defined otherwise, all the terms used in this specification including technical and scientific terms have the same meanings as would be generally understood by those skilled in the related art. The terms defined in generally used dictionaries should be construed as having the same meanings as would be construed in the context of the related art, and unless clearly defined otherwise in this specification, should not be construed as having idealistic or overly formal meanings.

It is also noted that in this specification, "connected/coupled" refers to one component not only directly coupling another component but also indirectly coupling another component through an intermediate component. On the other hand, "directly connected/directly coupled" refers to one component directly coupling another component without an intermediate component.

FIG. **1** illustrates that a semiconductor memory device **100** includes a memory cell array **110**, an address decoder **120**, a read/write circuit **130**, a control logic **140**, and a voltage generation unit **150**.

The memory cell array **110** includes a plurality of memory blocks BLK**1** to BLKz. The memory blocks BLK**1** to BLKz are coupled to the address decoder **120** through word lines WL. The memory blocks BLK**1** to BLKz are coupled to the read/write circuit **130** through bit lines BL**1** to BLm. Each of the memory blocks BLK**1** to BLKz includes a plurality of memory cells. In an embodiment, the plurality of memory cells may be nonvolatile memory cells. The plurality of memory cells coupled in common to a single word line are defined as one page. Furthermore, each memory block includes a plurality of pages. The plurality of memory cells included in the plurality of pages are successively stacked along a vertical plug on a semiconductor substrate.

A program operation of the semiconductor memory device **100** is performed on a page basis. Each of the memory blocks BLK**1** to BLKz of the memory cell array **110** includes a plurality of cell strings. Each of the cell strings includes a plurality of memory cells stacked on the semiconductor substrate. Each of the cell strings includes a drain select transistor, a plurality of memory cells and a source select transistor, which are coupled between a bit line BL and a common source line SL.

The address decoder **120**, the read/write circuit **130**, and the voltage generation unit **150** are operated as peripheral circuits for driving the memory cell array **110**.

The address decoder **120** is coupled to the memory cell array **110** through the word lines WL. The address decoder **120** is configured to operate in response to control of the control logic **140**. The address decoder **120** receives addresses ADDR through an input/output buffer (not shown) provided in the semiconductor memory device **100**. The address decoder **120** is configured to decode a row address among the received addresses ADDR. The address decoder **120** applies, during a program operation, program voltages Vpgm, pass voltages Vpass and operating voltages which are generated from the voltage generation unit **150**, to a plurality of memory cells, and drain and source select transistors of the memory cell array **110** in accordance with a decoded row address among the received addresses ADDR. The address decoder **120** is configured to decode a column address Yi among the received addresses ADDR. The address decoder **120** transmits the decoded column address Yi to the read/write circuit **130**.

Addresses ADDR received in a request for a program operation include a block address, a row address, and a column address Yi. The address decoder **120** selects one memory block and one word line in accordance with the block address and the row address. The column address Yi is decoded by the address decoder **120** and provided to the read/write circuit **130**.

The address decoder **120** may include a block decoder, a row decoder, a column decoder, an address buffer, etc.

The read/write circuit **130** includes a plurality of page buffers PB**1** to PBm. The plurality of page buffers PB**1** to PBm are coupled to the memory cell array **110** through the bit lines BL**1** to BLm. Each of the page buffers PB**1** to PBm receives program data DATA during a program operation and temporarily stores it, and controls, using a program enable voltage or a program inhibit voltage, the potential of a corresponding one of the bit lines BL**1** to BLm in accordance with the program data DATA. Furthermore, each of the page buffers PB**1** to PBm senses a program state of a corresponding memory cell during a program verify operation, compares it with the program data DATA temporarily stored during the program operation, and verifies whether the corresponding memory cell has been completely programmed.

The read/write circuit **130** may operate in response to control of the control logic **140**. In an embodiment, the read/write circuit **130** may include page buffers (or page resistors), a column select circuit, etc.

The control logic **140** is coupled to the address decoder **120**, the read/write circuit **130**, and the voltage generation unit **150**. The control logic **140** receives a command CMD through an input/output buffer (not shown) of the semiconductor memory device **100**. The control logic **140** is configured to control the overall operation of the semiconductor memory device **100** in response to the command CMD.

The control logic **140**, in an embodiment in accordance with the present invention, may apply pre-bias voltages to the word lines during a program operation. The control logic **140** may apply different pre-bias voltages to the word lines depending on the respective positions of the word lines.

During a program operation, the voltage generation unit **150** generates and outputs program voltages Vpgm, pass voltages Vpass, and a plurality of operating voltages under the control of the control logic **140**. The plurality of operating voltages may include a pipe transistor operating voltage or the like. As described herein, all elements other than the memory cell array **110** and the control logic **140** may be commonly called peripheral circuits.

FIG. **2** shows that the memory cell array **110** includes the plurality of memory blocks BLK**1** to BLKz. Each memory block may have a three-dimensional structure. Each memory block includes a plurality of memory cells stacked along the vertical plug on the semiconductor substrate. The memory cells may be arranged in +X, +Y, and +Z directions.

Referring now to FIG. **3**, only two cell strings are illustrated among the cell strings included in the plurality of memory blocks of the memory cell array. That is, there are illustrated a selected cell string that is targeted for a program operation, and an unselected cell string disposed at a position adjacent to the selected cell string, among unselected cell strings that are not targeted for the program operation. The selected cell string is coupled to a bit line BLk, and the unselected cell string is coupled to a bit line BLk+1.

FIG. **3** illustrates that the selected cell string is coupled between a common source line CSL and the corresponding bit line BLk, and includes a source select transistor SST**0**, memory cells MC**00** to MC**0**(n−1), and a drain select transistor DST**0**. The source select transistor SST**0** and the drain select transistor DST**0** are respectively coupled to a source select line SSL and a drain select line DSL. The memory cells MC**00** to MC**0**(n−1) are respectively coupled to the word lines WL**0** to WLn−1. The memory cells MC**00** to MC**0**(n−1) coupled to the different word lines WL**0** to WLn−1 are included in different pages. The unselected cell string is coupled between the common source line CSL and the corresponding bit line BLk+1, and includes a source select transistor SST**1**, memory cells MC**10** to MC**1**(n−1), and a drain select transistor DST**1**. The source select transistor SST**1** and the drain select transistor DST**1** are respectively coupled to the source select line SSL and the drain select line DSL. The memory cells MC**10** to MC**1**(n−1) are respectively coupled to the word lines WL**0** to WLn−1. The memory cells MC**10** to MC**1**(n−1) coupled to the different word lines WL**0** to WLn−1 are included in different pages.

The word lines coupled to a memory string in a memory block may be grouped, and different pre-bias voltages may be applied to the respective groups during a precharge operation of the cell string. Consequently, a uniform precharge level in the entirety of the cell string may be formed.

The operation of applying different pre-bias voltages to word lines at a precharging step during a program operation, in an embodiment in accordance with the present invention, will be described in detail subsequently with reference to FIGS. **4**A to **8**.

FIG. **4**A illustrates a method of grouping a plurality of word lines and applying pre-bias voltages thereto.

Referring to FIG. **4**A, a control logic of the semiconductor memory device, in an embodiment in accordance with the present invention, may group word lines in a memory block. The memory block includes thirty-two word lines WL**0** to WL**31**. The control logic in FIG. **4**A may group the thirty-two word lines into two word line groups. Each of a first word line group Group**1** and a second word line group Group**2** includes sixteen word lines.

The control logic may determine, based on the result of the grouping, pre-bias voltages to be applied to the respective word lines WL**0** to WL**31** depending on a position of a word line coupled to the target memory cell to be programmed. The pre-bias voltages are voltages to be applied to the respective word lines WL**0** to WL**31** in a precharging step during a program operation for the program cell.

FIG. **4**A illustrates the case where a target program cell to be programmed is coupled to a tenth word line WL**10** that is included in the first word line group Group**1**. This is the case where a memory cell proximate, or relatively close to the source select transistor is programmed. That is, in an embodiment of FIG. **4**A, a program direction is a direction from a zeroth word line WL**0** toward a thirty-first word line WL**31**. In the case of the typical program operation, during a precharge operation of an unselected memory string, a threshold voltage of a memory cell is increased by a resistance component between the source select transistor and the drain select transistor. Consequently, the precharge level in a source select side channel is reduced and thus channel boosting is not effectively generated. Therefore, a program disturb occurs. In the case of the semiconductor memory device according to the embodiment of the present disclosure, during a precharge process, the closer a word line group to which a word line belongs is to the drain select transistor, the higher a pre-bias voltage to be applied to the word line may be. In other words, in the semiconductor memory device in an embodiment in accordance with the present invention, during a precharge process, in the case of a word line group including the word line WL**0** coupled to the first-programmed memory cell or a word line group that is close thereto, a relatively low pre-bias voltage may be applied to the corresponding word line group. In the case of a word line group including the word line WL**31** coupled to the memory cell to be last programmed or a word line group that is close thereto, a comparatively high pre-bias voltage may be applied to the corresponding word line. Therefore, effects caused by the resistance component between the source select transistor and the drain select transistor are offset, whereby the precharge level in the channel may be uniformly formed. Consequently, a program disturb phenomenon is mitigated.

Referring again to FIG. **4**, in the case where the word line coupled to the program cell is included in the first group Group**1**, during a precharge operation, a pre-bias voltage having a default value may be applied to the word lines WL**0** to WL**15** included in the first group Group**1**, and a pre-bias voltage higher by a predetermined value than the default value may be applied to the word lines WL**16** to WL **31** included in the second group Group**2**. That is, the pre-bias voltage that is applied to the word lines included in the second group Group**2** is higher than the pre-bias voltage that is applied to the word lines included in the first group Group**1**.

A precharge voltage to be applied to the common source line during a precharge operation may be set to be changed depending on the position of the selected word line. For

example, the closer a target program cell to be programmed is to the source select transistor, the higher the precharge voltage to be applied to the common source line may be. For example, the closer a target program cell to be programmed is to the drain select transistor, the lower the precharge voltage to be applied to the common source line may be.

After the pre-bias voltage is applied to the respective word lines and the precharge operation is completed, a program voltage may be applied to the selected word lineWL**10**, and a pass voltage may be applied to unselected word lines WL**0** to WL**9** and WL**11** to WL**31**. The above-mentioned operation is a program loop for memory cells, and the program loop may be repeatedly performed.

In a case where the program cell is coupled to a word line included in the second word line group Group**2**, the same default value may be applied as a pre-bias voltage to the entire word lines WL**0** to WL**31**. For example, in the case where the program cell is coupled to a twenty-ninth word line WL**28**, memory cells coupled to the first to twenty-eighth word lines WL**0** to WL**27** are in a program-completed state. In this case, there is little need for applying a higher pre-bias voltage to word lines that are relatively close to the drain select transistor. Therefore, in this case, a pre-bias voltage having the same value may be applied to the entire word lines WL**0** to WL**31** included in the first group and the second group, Group**1** and Group**2**.

FIG. **4**A illustrates an embodiment in which the word lines are grouped into the two word line groups. However, word lines of the semiconductor memory device may be grouped into three or more word line groups.

FIG. **4**B is a diagram illustrating a method of grouping a plurality of word lines and applying pre-bias voltages thereto, in another embodiment in accordance with the present invention.

Referring to FIG. **4**B, the control logic may group the thirty-two word lines into four word line groups. Each of first to fourth word line groups Group**1** to Group**4** includes eight word lines. Here, there will be described the case where eleventh word line WL**11** is selected.

As described with reference to FIG. **4**A, based on a group in which a selected word line is included, the closer a group is to the drain select transistor, the higher a pre-bias voltage to be applied to corresponding word lines is. That is, a pre-bias voltage that is applied to word lines WL**16** to WL**23** included in a third group Group**3** may be higher than a pre-bias voltage that is applied to word lines WL**8** to WL**15** included in a second group Group**2**. Furthermore, a pre-bias voltage that is applied to word lines WL**24** to WL**31** included in a fourth group Group**4** may be higher than a pre-bias voltage that is applied to word lines WL**16** to WL**23** included in the third group Group**3**. A pre-bias voltage having a default value is applied to the word lines WL**8** to WL**15** included in the second group Group**2**, including a word line WL**11** that is coupled to a selected transistor. In addition, the pre-bias voltage having the default value also is applied to word lines WL**0** to WL**7** included in a first group, Group**1**, that is closer to the source select transistor than is the second group.

In another embodiment, in the case where the selected transistor is coupled to a word line included in the third group Group**3**, a pre-bias voltage having the default value may be applied to the word lines WL**0** to WL**23** included in the first to third groups Group**1** to Group**3**, and a pre-bias voltage having a value higher than the default value may be applied to the word lines WL**24** to WL**31** included in the fourth group, Group**4**.

FIG. **4**C is a diagram illustrating a method of grouping a plurality of word lines and applying pre-bias voltages thereto, according to yet another embodiment.

Although FIGS. **4**A to **4**B illustrate the embodiments in which each of the word line groups include the same number of word lines, in the semiconductor memory device and operating method thereof in accordance with the present invention, each of the word line groups may include different numbers of word lines. For example, as shown in FIG. **4**C, the closer a word line group is to the drain select transistor, the fewer the number of word lines included therein may be.

FIG. **5**A is a diagram illustrating a method of grouping a plurality of word lines and applying pre-bias voltages thereto, according to still another embodiment.

Referring to FIG. **5**A, unlike the scenarios depicted in FIGS. **4**A to **4**C, there is illustrated an embodiment in which memory cells that are close to the drain select line DSL are first programmed. That is, in an embodiment of FIG. **5**A, a program direction is a direction from a thirty-first word line WL**31** toward a zeroth word line WL**0**. For this, an additional drain side power word line DPWL may be included between the drain select line DSL and the word lines, and related transistors may also be provided. Furthermore, an additional source side power word line SPWL may be included between the source select line SSL and the word lines, and related transistors may also be provided.

According to the embodiment of FIG. **5**A, in the case where, for example, a selected word line WL**24** is included in a second group Group**2**, a pre-bias voltage having a default value is applied to word lines WL**16** to WL**31** included in the second group Group**2**, and a pre-bias voltage having a value higher than the default value is applied to word lines WL**0** to WL**15** included in a first group Group**1**. That is, in the semiconductor memory device in an embodiment in accordance with the present invention, in the case where a program operation is first performed on a memory cell adjacent to the drain select transistor, the closer a word line group to which a word line belongs is to the source select transistor, the higher the pre-bias voltage to be applied to the word line may be. In other words, during a precharge process, in the case of a word line group including the word line WL**31** coupled to the first-programmed memory cell or a word line group that is close thereto, a relatively low pre-bias voltage may be applied to the corresponding word line group. In the case of a word line group including the word line WL**0** coupled to the memory cell to be last programmed or a word line group that is close thereto, a relatively high pre-bias voltage may be applied to the corresponding word line group.

FIG. **5**B is a diagram illustrating a method of grouping a plurality of word lines and applying pre-bias voltages thereto, according to still another embodiment.

In FIG. **5**B, a twelfth word line WL**12** is selected. Therefore, a pre-bias voltage having a default value is applied to word lines WL**8** to WL**31** included in second to fourth groups Group**2** to Group**4**, and a pre-bias voltage having a value higher than the default value is applied to word lines WL**0** to WL**7** included in a first group Group**1**.

FIG. **6** is a flowchart showing a method of programming the semiconductor memory device according to an embodiment.

Referring to FIG. **6**, the method of programming the semiconductor memory device according to an embodiment includes a step S**101** of grouping word lines coupled to memory cells into a plurality of word line groups, and a step S**103** of performing a program operation based on a result of

the grouping of the word lines. At step S**101**, the number of groups of word lines to be grouped and the number of word lines to be included in each of the word line groups may be determined. At step S**103**, based on the determined result of the grouping of the word lines, pre-bias voltages to be applied to word lines included in the respective groups may be determined depending on which word line group is the group to which the selected word line belongs, and then a program operation may be performed.

FIG. **7** is a flowchart illustrating the step of performing the program operation, based on the result of grouping the word lines in FIG. **6**.

Referring to FIG. **7**, the step of performing the program operation based on the result of the grouping of the word lines includes a step S**201** of determining a word line group that includes a word line coupled to a program cell, a step S**203** of determining pre-bias voltages to be applied to the respective word line groups based on a result of the determining of the word line group, a step S**205** of precharging channel regions of memory cells based on the determined pre-bias voltages, and a step S**207** of performing a program loop. At the step S**201** of determining the word line group that includes the word line coupled to the program cell, which one of the word line groups is the word line group to which the word line coupled to the program cell belongs, is determined. At the step S**203** of determining pre-bias voltages to be applied to the respective word line groups based on the result of determining of the word line group, the pre-bias voltages to be applied to word lines included in the respective word line groups are determined. As described above with reference to FIGS. **4**A to **4**C, the closer a word line group is to the drain select transistor, the higher pre-bias voltages to be applied to corresponding word lines may be. At the step S**205** of precharging channel regions of memory cells based on the determined pre-bias voltages, the determined pre-bias voltages are applied to the respective word lines and a precharge voltage is applied to the common source line. At the step S**207** of performing the program loop, a program voltage is applied to the selected word line, and pass voltages are applied to unselected word lines.

FIG. **8** is a flowchart showing another embodiment illustrating in detail the step of performing the program operation, based on the result of grouping the word lines of FIG. **6**.

Referring to FIG. **8**, the step of performing the program operation based on the result of the grouping of the word lines includes a step S**301** of determining a word line group that includes a word line coupled to a program cell, a step S**303***a* of determining pre-bias voltages to be applied to the respective word line groups based on a result of the determining of the word line group, a step S**303***b* of determining a source voltage to be applied to the common source line based on the result of the determining of the word line group, a step S**305** of precharging channel regions of memory cells based on the determined source voltage and pre-bias voltages, and a step S**307** of performing a program loop. The embodiment of FIG. **8**, unlike the embodiment of FIG. **7**, further includes the step S**303***b* of determining the source voltage to be applied to the common source line, based on the result of the determining of the word line group that is performed at the step S**301**.

At the step S**303***b*, the closer a word line coupled to the selected memory cell for the program operation is to the first-programmed memory cell, the greater the source voltage to be applied to the common source line may be. For example, referring to FIG. **8** together with FIG. **4**B, a source voltage to be applied to the common source line CSL, in the case where a selected word line that is targeted for the program operation is included in the second group Group**2**, is higher than a source voltage to be applied to the common source line CSL, in the case where the selected word line that is targeted for the program operation is included in the first group Group**1**. In another example, a source voltage to be applied to the common source line CSL, in the case where the selected word line that is targeted for the program operation is included in the third group Group**3**, is higher than a source voltage to be applied to the common source line CSL, in the case where the selected word line that is targeted for the program operation is included in the second group Group**2**. In another example, a source voltage to be applied to the common source line CSL, in the case where the selected word line that is targeted for the program operation is included in the fourth group Group**4**, is higher than a source voltage to be applied to the common source line CSL, in the case where the selected word line that is targeted for the program operation is included in the third group Group**3**.

In another embodiment, at the step S**303***b*, the closer a word line coupled to the selected memory cell for the program operation is to the first-programmed memory cell, the lower the source voltage to be applied to the common source line may be. For example, referring to FIG. **8** together with FIG. **4**B, a source voltage to be applied to the common source line CSL, in the case where a selected word line that is targeted for the program operation is included in the first group Group**1**, is higher than a source voltage to be applied to the common source line CSL, in the case where the selected word line that is targeted for the program operation is included in the second group Group**2**. In another example, a source voltage to be applied to the common source line CSL, in the case where the selected word line that is targeted for the program operation is included in the second group Group**2**, is higher than a source voltage to be applied to the common source line CSL, in the case where the selected word line that is targeted for the program operation is included in the third group Group**3**. In another example, a source voltage to be applied to the common source line CSL, in the case where the selected word line that is targeted for the program operation is included in the third group Group**3**, is higher than a source voltage to be applied to the common source line CSL, in the case where the selected word line that is targeted for the program operation is included in the fourth group Group**4**.

At the step S**305**, a channel precharge operation may be performed based on the pre-bias voltages determined at the step S**303***a* and the source voltage determined at the step S**303***b*.

FIG. **9** is a block diagram of a memory system including the semiconductor memory device of FIG. **1**.

Referring to FIG. **9**, the memory system **1000** includes the semiconductor memory device **100** and a controller **1100**.

The semiconductor memory device **100** may have the same configuration and operation as those of the semiconductor memory device described with reference to FIG. **1**. Hereinafter, repetitive explanations will be omitted.

The controller **1100** is coupled to a host Host and the semiconductor memory device **100**. The controller **1100** is configured to access the semiconductor memory device **100** in response to a request from the host Host. For example, the controller **1100** is configured to control read, write, erase, and background operations of the semiconductor memory device **100**. The controller **1100** is configured to provide an interface between the host Host and the semiconductor

memory device **100**. The controller **1100** is configured to drive firmware for controlling the semiconductor memory device **100**.

The controller **1100** includes a RAM (Random Access Memory) **1110**, a processing unit **1120**, a host interface **1130**, a memory interface **1140**, and an error correction block **1150**. The RAM **1110** is used as at least one of an operation memory of the processing unit **1120**, a cache memory between the semiconductor memory device **100** and the host Host, and a buffer memory between the semiconductor memory device **100** and the host Host. The processing unit **1120** controls the overall operation of the controller **1100**. In addition, the controller **1100** may temporarily store program data provided from the host Host during the write operation.

The host interface **1130** includes a protocol for performing data exchange between the host Host and the controller **1100**. In an embodiment, the controller **1200** is configured to communicate with the host Host through at least one of various interface protocols such as a universal serial bus (USB) protocol, a multimedia card (MMC) protocol, a peripheral component interconnection (PCI) protocol, a PCI-express (PCI-E) protocol, an advanced technology attachment (ATA) protocol, a serial-ATA protocol, a parallel-ATA protocol, a small computer system interface (SCSI) protocol, an enhanced small disk interface (ESDI) protocol, and an integrated drive electronics (IDE) protocol, a private protocol, and the like.

The memory interface **1140** interfaces with the semiconductor memory device **100**. For example, the memory interface includes a NAND interface or NOR interface.

The error correction block **1150** uses an error correcting code (ECC) to detect and correct an error in data received from the semiconductor memory device **100**. The processing unit **1120** may adjust the read voltage according to an error detection result from the error correction block **1150**, and control the semiconductor memory device **100** to perform re-reading. In an embodiment, the error correction block may be provided as an element of the controller **1100**.

The controller **1100** and the semiconductor memory device **100** may be integrated into a single semiconductor device. The controller **1100** and the semiconductor memory device **100** may be integrated into a single semiconductor device to form a memory card. For example, the controller **1100** and the semiconductor memory device **100** may be integrated into a single semiconductor device and form a memory card such as a personal computer memory card international association (PCMCIA), a compact flash card (CF), a smart media card (SM or SMC), a memory stick multimedia card (MMC, RS-MMC, or MMCmicro), a SD card (SD, miniSD, microSD, or SDHC), a universal flash storage (UFS), and the like.

The controller **1100** and the semiconductor memory device **100** may be integrated into a single semiconductor device to form a solid state drive (SSD). The SSD includes a storage device formed to store data in a semiconductor memory. When the memory system **1000** is used as the SSD, an operation speed of the host Host coupled to the memory system **2000** may be enhanced.

In another embodiment, the memory system **1000** may be provided as one of various elements of an electronic device such as a computer, an ultra mobile PC (UMPC), a workstation, a net-book, a personal digital assistant (PDA), a portable computer, a web tablet, a wireless phone, a mobile phone, a smart phone, an e-book, a portable multimedia player (PMP), a game console, a navigation device, a black box, a digital camera, a 3-dimensional television, a digital audio recorder, a digital audio player, a digital picture recorder, a digital picture player, a digital video recorder, a digital video player, a device capable of transmitting/receiving information in a wireless environment, one of various devices for forming a home network, one of various electronic devices for forming a computer network, one of various electronic devices for forming a telematics network, an RFID device, one of various elements for forming a computing system, or the like.

In an embodiment, the semiconductor memory device **100** or the memory system **1000** may be embedded in various types of packages. For example, the semiconductor memory device **100** or the memory system **2000** may be packaged in a type such as Package on Package (PoP), Ball grid arrays (BGAs), Chip scale packages (CSPs), Plastic Leaded Chip Carrier (PLCC), Plastic Dual In Line Package (PDIP), Die in Waffle Pack, Die in Wafer Form, Chip On Board (COB), Ceramic Dual In Line Package (CERDIP), Plastic Metric Quad Flat Pack (MQFP), Thin Quad Flatpack (TQFP), Small Outline Integrated Circuit (SOIC), Shrink Small Outline Package (SSOP), Thin Small Outline (TSOP), Thin Quad Flatpack (TQFP), System In Package (SIP), Multi Chip Package (MCP), Wafer-level Fabricated Package (WFP), Wafer-Level Processed Stack Package (WSP), or the like.

FIG. **10** is a block diagram of another embodiment of a memory system including the semiconductor memory device of FIG. **1**.

Referring FIG. **10**, the memory system **2000** includes a semiconductor memory device **2100** and a controller **2200**. The semiconductor memory device **2100** includes a plurality of memory chips. The semiconductor memory chips are divided into a plurality of groups.

In FIG. **10**, it is illustrated that each of the plurality of groups communicates with the controller **2200** through first to k_{th} channels CH**1** to CHk. Each semiconductor memory chip may have the same configuration and operation as those of an embodiment of the semiconductor memory device **100** described with reference to FIG. **1**.

Each group communicates with the controller **2200** through one common channel. The controller **2200** has the same configuration as that of the controller **1100** described with reference to FIG. **9** and is configured to control a plurality of memory chips of the semiconductor memory device **2100** through the plurality of channels CH**1** to CHk.

FIG. **11** is a block diagram illustrating a computing system including the memory system of FIG. **10**.

Referring to FIG. **11**, the computing system **3000** may include a central processing unit **3100**, a RAM **3200**, a user interface **3300**, a power supply **3400**, a system bus **3500**, and a memory system **2000**.

The memory system **2000** is electrically coupled to the CPU **3100**, the RAM **3200**, the user interface **3300**, and the power supply **3400** through the system bus **3500**. Data provided through the user interface **3300** or processed by the CPU **3100** is stored in the memory system **2000**.

In FIG. **11**, the semiconductor memory device **2100** is illustrated as being coupled to the system bus **3500** through the controller **2200**. However, the semiconductor memory device **2100** may be directly coupled to the system bus **3500**. The function of the controller **2200** may be performed by the CPU **3100** and the RAM **3200**.

In FIG. **11**, the memory system **2000** described with reference to FIG. **10** is illustrated as being used. However, the memory system **2000** may be replaced with the memory system **1000** described with reference to FIG. **9**. In an

embodiment, the computing system **3000** may include all of the memory systems **1000** and **2000** described with reference to FIGS. **9** and **10**.

For a semiconductor memory device in an embodiment in accordance with the present invention, a program disturb phenomenon of the adjacent memory cell is mitigated during a program operation.

Example embodiments have been disclosed herein, and although specific terms are employed, they are used and are to be interpreted in a generic and descriptive sense only and not for purposes of limitation. In some instances, as would be apparent to one of ordinary skill in the art as of the filing of the present application, features, characteristics, and/or elements described in connection with a particular embodiment may be used singly or in combination with features, characteristics, and/or elements described in connection with other embodiments, unless otherwise specifically indicated. Accordingly, it will be understood by those of skill in the art that various changes in form and detail may be made without departing from the spirit and scope of the present invention as set forth in the following claims.

What is claimed is:

1. A semiconductor memory device comprising:

a memory cell array including a plurality of memory cells connected to a plurality of word lines, respectively;

a peripheral circuit configured to apply a program voltage to a selected word line among the plurality of word lines; and

a control logic configured to control the peripheral circuit to apply pre-bias voltages to the plurality of word lines, respectively, before the program voltage is applied to the selected word line,

wherein the pre-bias voltages are determined based on relative positions of the plurality of word lines.

2. The semiconductor memory device according to claim **1**,

wherein the plurality of word lines are grouped into a plurality of word line groups, and

wherein the closer a word line group among the plurality of word line groups is to a first-programmed memory cell in the memory cell array, the lower a pre-bias voltage to be applied to word lines included in the word line group is.

3. The semiconductor memory device according to claim **1**,

wherein the plurality of word lines are grouped into a plurality of word line groups,

wherein the memory cells are programmed in a sequence from a memory cell adjacent to a source select transistor, and

wherein the closer a word line group among the plurality of word line groups is to a drain select transistor in the memory cell array, the greater a pre-bias voltage to be applied to word lines included in the word line group is.

4. The semiconductor memory device according to claim **3**, wherein each of the plurality of word line groups includes the same number of word lines.

5. The semiconductor memory device according to claim **3**, wherein the closer the word line group among the plurality of word line groups is to the source select transistor in the memory cell array, the greater the number of word lines included in the word line group is.

6. The semiconductor memory device according to claim **3**, wherein a pre-bias voltage that is applied to word lines included in a word line group to which the selected word line belongs has a default value, and the pre-bias voltage that is applied to the plurality of word lines disposed between the word line group to which the selected word line belongs and the source select transistor also has the default value.

7. The semiconductor memory device according to claim **3**, wherein the control logic determines a precharge voltage to be applied to a common source line based on a position of the selected word line.

8. The semiconductor memory device according to claim **7**, wherein the control logic controls the peripheral circuit such that the closer the selected word line is to the source select transistor, the greater the precharge voltage to be applied to the common source line is.

9. The semiconductor memory device according to claim **1**,

wherein the plurality of word lines are grouped into a plurality of word line groups,

wherein the memory cells are programmed in a sequence from a memory cell adjacent to a drain select transistor, and

wherein the closer a word line group among the plurality of word line groups is to a source select transistor in the memory cell array, the greater a pre-bias voltage to be applied to word lines included in the word line group is.

10. The semiconductor memory device according to claim **9**, wherein a pre-bias voltage that is applied to word lines included in a word line group to which the selected word line belongs has a default value, and the pre-bias voltage that is applied to the plurality of word lines disposed between the word line group to which the selected word line belongs and the drain select transistor also has a default value.

11. The semiconductor memory device according to claim **9**,

wherein the control logic determines a precharge voltage to be applied to a common source line based on a position of the selected word line, and

wherein the control logic controls the peripheral circuit such that the closer the selected word line is to the drain select transistor, the greater the precharge voltage to be applied to the common source line is.

12. An operating method of a semiconductor memory device, comprising:

applying pre-bias voltages to a plurality of word lines, respectively; and

applying a program voltage to a selected word line among the plurality of word lines after the pre-bias voltages are applied to the plurality of word lines,

wherein the plurality of word lines are grouped into a plurality of word line groups based on positions of the plurality of word lines, and

wherein the pre-bias voltages are determined according to the plurality of word line groups.

13. The operating method according to claim **12**, wherein the closer a word line group among the plurality of word line groups is to a first-programmed memory cell in a memory cell array, the lower a pre-bias voltage to be applied to word lines included in the word line group is.

14. The operating method according to claim **12**,

wherein memory cells are programmed in a sequence from a memory cell adjacent to a source select transistor, and

wherein

the closer a word line group among the plurality of word line groups is to a drain select transistor in a memory cell array, the greater a pre-bias voltage to be applied to word lines included in the word line group is.

15. The operating method according to claim **14**,

wherein each of the plurality of word line groups includes the same number of word lines.

16. The operating method according to claim **14**,

wherein the closer the word line group among the plurality of word line groups is to the source select transistor in the memory cell array, the greater the number of word lines included in the word line group is.

17. The operating method according to claim **12**, the method further comprising:

applying a precharge voltage to be applied to a common source line such that the closer the selected word line is to a first-programmed memory cell in a memory cell array, the greater the precharge voltage to be applied to the common source line is.

18. The operating method according to claim **12**,

wherein memory cells are programmed in a sequence from a memory cell adjacent to a drain select transistor, and

wherein the closer a word line group among the plurality of word line groups to a source select transistor in a memory cell array, the greater a pre-bias voltage to be applied to word lines included in the word line group is.

19. The operating method according to claim **18**, the method further comprising:

applying a precharge voltage to be applied to a common source line such that the closer the selected word line is to the drain select transistor, the greater the precharge voltage to be applied to the common source line is.

* * * * *