US006879817B1

(12) **United States Patent**
Sorrells et al.

(10) **Patent No.: US 6,879,817 B1**
(45) **Date of Patent: Apr. 12, 2005**

(54) **DC OFFSET, RE-RADIATION, AND I/Q SOLUTIONS USING UNIVERSAL FREQUENCY TRANSLATION TECHNOLOGY**

(75) Inventors: **David F. Sorrells**, Jacksonville, FL (US); **Michael J. Bultman**, Jacksonville, FL (US); **Robert W. Cook**, Switzerland, FL (US); **Jonathan S. Jensen**, Salt Lake City, UT (US); **Martin R. Johnson**, Salt Lake City, UT (US); **Richard C. Looke**, Jacksonville, FL (US); **Charley D. Moses, Jr.**, Jacksonville, FL (US); **Gregory S. Rawlins**, Lake Mary, FL (US); **Michael W. Rawlins**, Lake Mary, FL (US); **Robert T. Short**, Salt Lake City, UT (US); **Jamison L Young**, Roy, UT (US)

(73) Assignee: **ParkerVision, Inc.**, Jacksonville, FL (US)

(*) Notice: Subject to any disclaimer, the term of this patent is extended or adjusted under 35 U.S.C. 154(b) by 0 days.

(21) Appl. No.: **09/526,041**

(22) Filed: **Mar. 14, 2000**

Related U.S. Application Data

(60) Provisional application No. 60/180,667, filed on Feb. 7, 2000, provisional application No. 60/177,705, filed on Jan. 24, 2000, provisional application No. 60/177,702, filed on Jan. 24, 2000, provisional application No. 60/171,502, filed on Dec. 22, 1999, provisional application No. 60/171,496, filed on Dec. 22, 1999, provisional application No. 60/171,349, filed on Dec. 21, 1999, provisional application No. 60/158,047, filed on Oct. 7, 1999, and provisional application No. 60/129,839, filed on Apr. 16, 1999.

(51) **Int. Cl.**[7] **H04B 1/10**

(52) **U.S. Cl.** **455/296**; 455/207; 455/209; 455/313; 455/323

(58) **Field of Search** 455/70, 118, 207, 455/209, 296, 307, 313–314, 323, 333–334, 337–339; 327/113–116; 329/315, 345, 347; 375/324, 328, 340

(56) **References Cited**

U.S. PATENT DOCUMENTS

2,057,613 A 10/1936 Gardner 250/8
2,241,078 A 5/1941 Vreeland 179/15

(Continued)

FOREIGN PATENT DOCUMENTS

DE 35 41 031 A1 5/1986 ..... H03D/3/00

(Continued)

OTHER PUBLICATIONS

Translation of Japanese Patent Publication No. 60–130203, 3 pages.

Razavi B., A 900–MHz/1.8–Ghz CMOS Transmitter for Dual–Band Applications, *Symposium on VLSI Circuits Digest of Technical Papers,* IEEE, pp. 128–131 (1998).

Ritter, G.M., "SDA, A New Solution for Transceivers," *16th European Microwave Conference,* Microwave Exhibitions and Publishers, pp. 729–733 (Sep. 8, 1986).

(Continued)

Primary Examiner—Lee Nguyen
(74) *Attorney, Agent, or Firm*—Sterne, Kessler, Goldstein and Fox P.L.L.C.

(57) **ABSTRACT**

Methods, systems, and apparatuses for down-converting an electromagnetic (EM) signal by aliasing the EM signal, and applications thereof are described herein. Reducing or eliminating DC offset voltages and re-radiation generated when down-converting an electromagnetic (EM) signal is also described herein. Down-converting a signal and improving receiver dynamic range is also described herein.

47 Claims, 120 Drawing Sheets

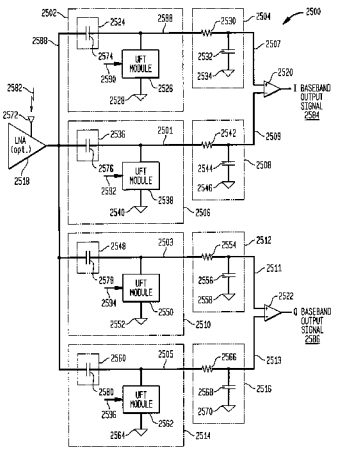

U.S. PATENT DOCUMENTS

2,270,385	A	1/1942	Skillman	179/15
2,283,575	A	5/1942	Roberts	250/6
2,358,152	A	9/1944	Earp	179/171.5
2,410,350	A	10/1946	Labin et al.	179/15
2,451,430	A	10/1948	Barone	250/8
2,462,069	A	2/1949	Chatterjea et al.	250/17
2,462,181	A	2/1949	Grosselfinger	250/17
2,472,798	A	6/1949	Fredendall	178/44
2,497,859	A	2/1950	Boughtwood et al.	250/8
2,499,279	A	2/1950	Peterson	332/41
2,802,208	A	8/1957	Hobbs	343/176
2,985,875	A	5/1961	Grisdale et al.	343/100
3,023,309	A	2/1962	Foulkes	250/17
3,069,679	A	12/1962	Sweeney et al.	343/200
3,104,393	A	9/1963	Vogelman	343/200
3,114,106	A	12/1963	McManus	325/56
3,118,117	A	1/1964	King et al.	332/22
3,226,643	A	12/1965	McNair	325/40
3,246,084	A	4/1966	Kryter	
3,258,694	A	6/1966	Shepherd	325/145
3,383,598	A	5/1968	Sanders	325/163
3,384,822	A	5/1968	Miyagi	325/30
3,454,718	A	7/1969	Perreault	178/66
3,523,291	A	8/1970	Pierret	340/347
3,548,342	A	12/1970	Maxey	332/9
3,555,428	A	1/1971	Perrault	325/320
3,614,627	A	10/1971	Runyan et al.	
3,617,892	A	11/1971	Hawley et al.	325/145
3,621,402	A	11/1971	Gardner	328/37
3,622,885	A	11/1971	Oberdorf et al.	
3,623,160	A	11/1971	Giles et al.	340/347 DA
3,626,417	A	12/1971	Gilbert	343/203
3,629,696	A	12/1971	Bartelink	324/57 R
3,662,268	A	5/1972	Gans et al.	325/56
3,689,841	A	9/1972	Bello et al.	325/39
3,702,440	A	11/1972	Moore	
3,714,577	A	1/1973	Hayes	325/145
3,716,730	A	2/1973	Cerny, Jr.	307/295
3,717,844	A	2/1973	Barret et al.	340/5 R
3,735,048	A	5/1973	Tomsa et al.	179/15 BM
3,736,513	A	5/1973	Wilson	
3,767,984	A	10/1973	Shinoda et al.	
3,806,811	A	4/1974	Thompson	325/146
3,852,530	A	12/1974	Shen	
3,868,601	A	2/1975	MacAfee	332/45
3,940,697	A	2/1976	Morgan	
3,949,300	A	4/1976	Sadler	325/31
3,967,202	A	6/1976	Batz	325/31
3,980,945	A	9/1976	Bickford	325/30
3,987,280	A	10/1976	Bauer	235/150.53
3,991,277	A	11/1976	Hirata	179/15 FD
4,003,002	A	1/1977	Snijders et al.	332/10
4,013,966	A	3/1977	Campbell	325/363
4,016,366	A	4/1977	Kurata	
4,017,798	A	4/1977	Gordy et al.	325/42
4,019,140	A	4/1977	Swerdlow	322/65
4,032,847	A	6/1977	Unkauf	325/323
4,035,732	A	7/1977	Lohrmann	325/446
4,045,740	A	8/1977	Baker	
4,047,121	A	9/1977	Campbell	331/76
4,051,475	A	9/1977	Campbell	343/180
4,066,841	A	1/1978	Young	178/66 R
4,066,919	A	1/1978	Huntington	307/353
4,080,573	A	3/1978	Howell	325/439
4,081,748	A	3/1978	Batz	325/56
4,115,737	A	9/1978	Hongu et al.	
4,130,765	A	12/1978	Arakelian et al.	307/220 R
4,130,806	A	12/1978	Van Gerwen et al.	325/487
4,142,155	A	2/1979	Adachi	325/47
4,170,764	A	10/1979	Salz et al.	332/17
4,204,171	A	5/1980	Sutphin, Jr.	328/167
4,210,872	A	7/1980	Gregorian	330/9
4,220,977	A	9/1980	Yamanaka	
4,245,355	A	1/1981	Pascoe et al.	455/326
4,253,066	A	2/1981	Fisher et al.	329/50
4,253,067	A	2/1981	Caples et al.	329/110
4,253,069	A	2/1981	Nossek	330/107
4,308,614	A	12/1981	Fisher et al.	370/119
4,320,361	A	3/1982	Kikkert	332/16 R
4,320,536	A	3/1982	Dietrich	455/325
4,334,324	A	6/1982	Hoover	455/333
4,346,477	A	8/1982	Gordy	455/257
4,355,401	A	10/1982	Ikoma et al.	375/5
4,356,558	A	10/1982	Owen et al.	364/724
4,360,867	A	11/1982	Gonda	363/158
4,363,132	A	12/1982	Collin	455/52
4,365,217	A	12/1982	Berger et al.	333/165
4,369,522	A	1/1983	Cerny, Jr. et al.	455/333
4,370,572	A	1/1983	Cosand et al.	307/353
4,384,357	A	5/1983	deBuda et al.	
4,389,579	A	6/1983	Stein	307/353
4,392,255	A	7/1983	Del Giudice	455/328
4,393,395	A	7/1983	Hacke et al.	358/23
4,430,629	A	2/1984	Betzl et al.	333/165
4,446,438	A	5/1984	Chang et al.	328/127
4,456,990	A	6/1984	Fisher et al.	370/119
4,470,145	A	9/1984	Williams	
4,472,785	A	9/1984	Kasuga	364/718
4,479,226	A	10/1984	Prabhu et al.	375/1
4,481,490	A	11/1984	Huntley	332/41
4,481,642	A	11/1984	Hanson	375/9
4,483,017	A	11/1984	Hampel et al.	
4,484,143	A	11/1984	French et al.	329/50
4,485,488	A	11/1984	Houdart	455/327
4,488,119	A	12/1984	Marshall	
4,504,803	A	3/1985	Lee et al.	332/31 R
4,510,467	A	4/1985	Chang et al.	
4,517,519	A	5/1985	Mukaiyama	329/126
4,517,520	A	5/1985	Ogawa	329/145
4,518,935	A	5/1985	van Roermund	333/173
4,521,892	A	6/1985	Vance et al.	375/88
4,563,773	A	1/1986	Dixon, Jr. et al.	455/327
4,577,157	A	3/1986	Reed	329/50
4,583,239	A	4/1986	Vance	375/94
4,591,736	A	5/1986	Hirao et al.	307/267
4,602,220	A	7/1986	Kurihara	331/19
4,603,300	A	7/1986	Welles, II et al.	329/50
4,612,464	A	9/1986	Ishikawa et al.	307/496
4,612,518	A	9/1986	Gans et al.	332/21
4,616,191	A	10/1986	Galani et al.	331/4
4,621,217	A	11/1986	Saxe et al.	315/1
4,628,517	A	12/1986	Schwarz et al.	375/40
4,633,510	A	12/1986	Suzuki et al.	
4,634,998	A	1/1987	Crawford	331/1 A
4,648,021	A	3/1987	Alberkrack	363/157
4,651,034	A	3/1987	Sato	307/556
4,653,117	A	3/1987	Heck	455/209
4,660,164	A	4/1987	Leibowitz	
4,675,882	A	6/1987	Lillie et al.	375/80
4,688,253	A	8/1987	Gumm	381/7
4,716,376	A	12/1987	Daudelin	329/107
4,716,388	A	12/1987	Jacobs	333/173
4,718,113	A	1/1988	Rother et al.	455/209
4,726,041	A	2/1988	Prohaska et al.	375/91
4,733,403	A	3/1988	Simone	375/103
4,734,591	A	3/1988	Ichitsubo	307/219.1
4,737,969	A	4/1988	Steel et al.	375/67
4,740,675	A	4/1988	Brosnan et al.	
4,743,858	A	5/1988	Everard	330/10
4,745,463	A	5/1988	Lu	358/23
4,751,468	A	6/1988	Agoston	328/133

4,757,538 A 7/1988 Zink 381/7
4,761,798 A 8/1988 Griswold, Jr. et al.
4,768,187 A 8/1988 Marshall 370/69.1
4,769,612 A 9/1988 Tamakoshi et al. 328/167
4,772,853 A 9/1988 Hart
4,785,463 A 11/1988 Janc et al. 375/1
4,791,584 A 12/1988 Greivenkamp, Jr. 364/525
4,801,823 A 1/1989 Yokoyama 307/353
4,806,790 A 2/1989 Sone 307/353
4,810,904 A 3/1989 Crawford 307/353
4,810,976 A 3/1989 Cowley et al. ..... 331/117 R
4,811,362 A 3/1989 Yester, Jr. et al. 375/75
4,816,704 A 3/1989 Fiori, Jr. 307/519
4,819,252 A 4/1989 Christopher 375/122
4,833,445 A 5/1989 Buchele 341/118
4,841,265 A 6/1989 Watanabe et al. 333/194
4,855,894 A 8/1989 Asahi et al. 363/157
4,857,928 A 8/1989 Gailus et al.
4,862,121 A 8/1989 Hochschild et al. 333/173
4,868,654 A 9/1989 Juri et al. 358/133
4,870,659 A 9/1989 Oishi et al. 375/82
4,871,987 A 10/1989 Kawase 332/100
4,885,587 A 12/1989 Wiegand et al. 42/14
4,885,756 A 12/1989 Fontanes et al. 375/82
4,888,557 A 12/1989 Puckette, IV et al. 329/341
4,890,302 A 12/1989 Muilwijk 375/80
4,893,316 A 1/1990 Janc et al. 375/44
4,893,341 A 1/1990 Gehring 381/7
4,894,766 A 1/1990 De Agro 363/159
4,896,152 A 1/1990 Tiemann 340/853
4,902,979 A 2/1990 Puckette, IV 329/343
4,908,579 A 3/1990 Tawfik et al. 328/167
4,910,752 A 3/1990 Yester, Jr. et al. 375/75
4,914,405 A 4/1990 Wells 331/25
4,920,510 A 4/1990 Senderowicz et al. 364/825
4,922,452 A 5/1990 Larsen et al. 365/45
4,931,921 A 6/1990 Anderson 363/163
4,943,974 A 7/1990 Motamedi 375/1
4,944,025 A 7/1990 Gehring et al. 455/207
4,955,079 A 9/1990 Connerney et al. 455/325
4,965,467 A 10/1990 Bilterijst 307/352
4,967,160 A 10/1990 Quievy et al. 328/16
4,970,703 A 11/1990 Hariharan et al. 367/138
4,972,436 A 11/1990 Halim et al.
4,982,353 A 1/1991 Jacob et al. 364/724.1
4,984,077 A 1/1991 Uchida 358/140
4,995,055 A 2/1991 Weinberger et al. 375/5
5,003,621 A 3/1991 Gailus 455/209
5,005,169 A 4/1991 Bronder et al. 370/76
5,006,810 A 4/1991 Popescu 328/167
5,010,585 A 4/1991 Garcia 455/118
5,012,245 A 4/1991 Scott et al.
5,014,304 A 5/1991 Nicollini et al. 379/399
5,015,963 A 5/1991 Sutton 329/361
5,016,242 A 5/1991 Tang
5,017,924 A 5/1991 Guiberteau et al. 342/195
5,020,149 A 5/1991 Hemmie 455/325
5,020,154 A 5/1991 Zierhut 455/608
5,052,050 A 9/1991 Collier et al. 455/296
5,058,107 A 10/1991 Stone et al.
5,065,409 A 11/1991 Hughes et al. 375/91
5,083,050 A 1/1992 Vasile 307/529
5,091,921 A 2/1992 Minami 375/88
5,095,533 A 3/1992 Loper et al. 455/245
5,095,536 A 3/1992 Loper 455/324
5,111,152 A 5/1992 Makino 329/300
5,113,094 A 5/1992 Grace et al. 307/529
5,113,129 A 5/1992 Hughes 323/316
5,115,409 A 5/1992 Stepp 364/841
5,122,765 A 6/1992 Pataut 332/105
5,124,592 A 6/1992 Hagino 307/520
5,126,682 A 6/1992 Weinberg et al. 329/304
5,136,267 A 8/1992 Cabot 333/174
5,140,705 A 8/1992 Kosuga 455/318
5,150,124 A 9/1992 Moore et al. 342/68
5,151,661 A 9/1992 Caldwell et al. 328/14
5,157,687 A 10/1992 Tymes 375/1
5,159,710 A 10/1992 Cusdin 455/304
5,170,414 A 12/1992 Silvian 375/59
5,172,070 A 12/1992 Hiraiwa et al. 329/304
5,179,731 A 1/1993 Tränkle et al.
5,191,459 A 3/1993 Thompson et al. 359/133
5,204,642 A 4/1993 Ashgar et al. 331/135
5,212,827 A 5/1993 Meszko et al. 455/219
5,214,787 A 5/1993 Karkota, Jr. 455/3.2
5,220,583 A 6/1993 Solomon 375/82
5,220,680 A 6/1993 Lee 455/102
5,222,144 A 6/1993 Whikehart 381/15
5,230,097 A 7/1993 Currie et al. 455/226.1
5,239,686 A 8/1993 Downey 455/78
5,241,561 A 8/1993 Barnard 375/1
5,249,203 A 9/1993 Loper 375/97
5,251,218 A 10/1993 Stone et al. 370/120
5,251,232 A 10/1993 Nonami 375/5
5,260,970 A 11/1993 Henry et al. 375/10
5,263,194 A 11/1993 Ragan 455/316
5,263,196 A 11/1993 Jasper 455/324
5,267,023 A 11/1993 Kawasaki 358/23
5,278,826 A 1/1994 Murphy et al. 370/76
5,282,023 A 1/1994 Scarpa 358/36
5,282,222 A 1/1994 Fattouche et al.
5,287,516 A 2/1994 Schaub 375/88
5,293,398 A 3/1994 Hamao et al. 375/1
5,303,417 A 4/1994 Laws 455/314
5,307,517 A 4/1994 Rich 455/306
5,315,583 A 5/1994 Murphy et al. 370/18
5,319,799 A 6/1994 Morita 455/78
5,321,852 A 6/1994 Seong 455/182.1
5,325,204 A 6/1994 Scarpa 348/607
5,337,014 A 8/1994 Najle et al. 324/613
5,339,054 A 8/1994 Taguchi 332/100
5,339,459 A 8/1994 Schiltz et al. 455/333
5,353,306 A 10/1994 Yamamoto 375/14
5,355,114 A 10/1994 Sutterlin et al. ..... 340/310 A
5,361,408 A 11/1994 Watanabe et al. 455/324
5,369,404 A 11/1994 Galton 341/143
5,369,789 A 11/1994 Kosugi et al.
5,369,800 A 11/1994 Takagi et al. 455/59
5,375,146 A 12/1994 Chalmers 375/103
5,379,040 A 1/1995 Mizomoto et al. 341/143
5,379,141 A 1/1995 Thompson et al. 359/125
5,388,063 A 2/1995 Takatori et al. 364/724.17
5,389,839 A 2/1995 Heck
5,390,364 A 2/1995 Webster et al. 455/52.3
5,400,084 A 3/1995 Scarpa 348/624
5,404,127 A 4/1995 Lee et al. 340/310.02
5,410,541 A 4/1995 Hotto 370/76
5,410,743 A 4/1995 Seely et al. 455/326
5,412,352 A 5/1995 Graham 332/103
5,416,449 A 5/1995 Joshi
5,416,803 A 5/1995 Janer 375/324
5,422,909 A 6/1995 Love et al.
5,422,913 A 6/1995 Wilkinson 375/347
5,423,082 A 6/1995 Cygan et al. 455/126
5,428,638 A 6/1995 Cioffi et al. 375/224
5,428,640 A 6/1995 Townley 375/257
5,434,546 A 7/1995 Palmer 332/151
5,438,329 A 8/1995 Gastouniotis et al.
5,438,692 A 8/1995 Mohindra 455/324
5,440,311 A 8/1995 Gallagher et al.
5,444,415 A 8/1995 Dent et al. 329/302
5,444,416 A 8/1995 Ishikawa et al. 329/341

5,444,865 A 8/1995 Heck et al. 455/86
5,446,421 A 8/1995 Kechkaylo 332/100
5,446,422 A 8/1995 Mattila et al. 332/103
5,448,602 A 9/1995 Ohmori et al. 375/347
5,451,899 A 9/1995 Lawton 329/302
5,454,007 A 9/1995 Dutta 375/322
5,454,009 A 9/1995 Fruit et al. 372/202
5,463,356 A 10/1995 Palmer 332/117
5,463,357 A 10/1995 Hobden 332/151
5,465,071 A 11/1995 Kobayashi et al. 329/315
5,465,410 A 11/1995 Hiben et al. 455/266
5,465,415 A 11/1995 Bien 455/326
5,465,418 A 11/1995 Zhou et al. 455/332
5,471,162 A 11/1995 McEwan 327/92
5,471,665 A 11/1995 Pace et al.
5,479,120 A 12/1995 McEwan 327/91
5,479,447 A 12/1995 Chow et al. 375/260
5,483,193 A 1/1996 Kennedy et al. 329/300
5,483,549 A 1/1996 Weinberg et al. 375/200
5,483,600 A 1/1996 Werrbach
5,483,691 A 1/1996 Heck et al. 455/234.2
5,483,695 A 1/1996 Pardoen
5,490,173 A 2/1996 Whikehart et al. 375/316
5,490,176 A 2/1996 Peltier
5,493,581 A 2/1996 Young et al. 375/350
5,493,721 A 2/1996 Reis 455/339
5,495,200 A 2/1996 Kwan et al. 327/554
5,495,202 A 2/1996 Hsu 327/113
5,495,500 A 2/1996 Jovanovich et al. 375/206
5,499,267 A 3/1996 Ohe et al. 375/206
5,500,758 A 3/1996 Thompson et al. 359/189
5,513,389 A 4/1996 Reeser et al. 455/311
5,515,014 A 5/1996 Troutman 332/178
5,517,688 A 5/1996 Fajen et al. 455/333
5,519,890 A 5/1996 Pinckley 455/307
5,523,719 A 6/1996 Longo et al. 327/557
5,523,726 A 6/1996 Kroeger et al. 332/103
5,523,760 A 6/1996 McEwan 342/89
5,539,770 A 7/1996 Ishigaki 375/206
5,555,453 A 9/1996 Kajimoto et al. 455/266
5,557,641 A 9/1996 Weinberg 375/295
5,557,642 A 9/1996 Williams 375/316
5,563,550 A 10/1996 Toth 329/347
5,564,097 A 10/1996 Swanke
5,574,755 A 11/1996 Persico 375/295
5,579,341 A 11/1996 Smith et al. 375/267
5,579,347 A 11/1996 Lindquist et al. 375/346
5,584,068 A 12/1996 Mohindra 455/324
5,589,793 A 12/1996 Kassapian
5,592,131 A 1/1997 Labreche et al. 332/103
5,600,680 A 2/1997 Mishima et al.
5,602,847 A 2/1997 Pagano et al. 370/484
5,602,868 A 2/1997 Wilson 375/219
5,604,592 A 2/1997 Kotidis et al. 356/357
5,604,732 A 2/1997 Kim et al. 370/342
5,606,731 A 2/1997 Pace et al.
5,608,531 A 3/1997 Honda et al. 386/1
5,610,946 A 3/1997 Tanaka et al. 375/269
RE35,494 E 4/1997 Nicollini 327/554
5,617,451 A 4/1997 Mimura et al. 375/340
5,619,538 A 4/1997 Sempel et al. 375/328
5,621,455 A 4/1997 Rogers et al. 348/6
5,628,055 A 5/1997 Stein
5,630,227 A 5/1997 Bella et al. 455/324
5,633,815 A 5/1997 Young
5,638,396 A 6/1997 Klimek 372/92
5,640,415 A 6/1997 Pandula 375/202
5,640,424 A 6/1997 Banavong et al. 375/316
5,640,428 A 6/1997 Abe et al. 375/334
5,640,698 A 6/1997 Shen et al. 455/323
5,648,985 A 7/1997 Bjerede et al. 375/219
5,650,785 A 7/1997 Rodal 342/357
5,661,424 A 8/1997 Tang 327/105
5,663,878 A 9/1997 Walker 363/159
5,663,986 A 9/1997 Striffler 375/260
5,668,836 A 9/1997 Smith et al. 375/316
5,675,392 A 10/1997 Nayebi et al. 348/584
5,678,220 A 10/1997 Fournier
5,680,078 A * 10/1997 Ariie 332/178
5,680,418 A * 10/1997 Croft et al. 375/346
5,682,099 A 10/1997 Thompson et al.
5,689,413 A * 11/1997 Jaramillo et al. 363/146
5,694,096 A 12/1997 Ushiroku et al. 333/195
5,699,006 A * 12/1997 Zele et al. 327/341
5,705,949 A 1/1998 Alelyunas et al. 329/304
5,705,955 A * 1/1998 Freeburg et al. 331/14
5,710,992 A 1/1998 Sawada et al.
5,710,998 A * 1/1998 Opas 455/324
5,714,910 A * 2/1998 Skoczen et al. 331/3
5,715,281 A * 2/1998 Bly et al. 375/344
5,721,514 A * 2/1998 Crockett et al. 331/3
5,724,002 A 3/1998 Hulick 329/361
5,724,653 A 3/1998 Baker et al. 455/296
5,729,577 A 3/1998 Chen 375/334
5,729,829 A 3/1998 Talwar et al. 455/63
5,732,333 A 3/1998 Cox et al. 455/126
5,736,895 A 4/1998 Yu et al. 327/554
5,737,035 A 4/1998 Rotzoll 348/725
5,742,189 A 4/1998 Yoshida et al. 327/113
5,748,683 A 5/1998 Smith et al. 375/347
5,751,154 A 5/1998 Tsugai
5,757,858 A 5/1998 Black et al.
5,757,870 A 5/1998 Miya et al. 375/367
RE35,829 E 6/1998 Sanderford, Jr. 375/200
5,760,645 A 6/1998 Comte et al. 329/304
5,764,087 A 6/1998 Clark 327/105
5,767,726 A 6/1998 Wang 327/356
5,768,118 A 6/1998 Faulk et al. 363/72
5,768,323 A 6/1998 Kroeger et al. 375/355
5,770,985 A 6/1998 Ushiroku et al. 333/193
5,771,442 A 6/1998 Wang et al. 455/93
5,777,692 A 7/1998 Ghosh 348/725
5,777,771 A 7/1998 Smith 359/180
5,778,022 A 7/1998 Walley 375/206
5,786,844 A 7/1998 Rogers et al. 348/6
5,790,587 A 8/1998 Smith et al.
5,793,801 A 8/1998 Fertner 375/219
5,793,817 A 8/1998 Wilson
5,793,818 A 8/1998 Claydon et al. 375/326
5,801,654 A 9/1998 Traylor 341/144
5,802,463 A 9/1998 Zuckerman 455/208
5,809,060 A 9/1998 Cafarella et al. 375/206
5,812,546 A 9/1998 Zhou et al. 370/342
5,818,582 A 10/1998 Fernandez et al. 356/318
5,818,869 A 10/1998 Miya et al. 375/206
5,825,254 A 10/1998 Lee 331/25
5,834,985 A 11/1998 Sundegård 332/100
5,841,324 A 11/1998 Williams 331/17
5,841,811 A 11/1998 Song 375/235
5,844,449 A 12/1998 Abeno et al. 332/105
5,859,878 A 1/1999 Phillips et al. 375/316
5,864,754 A 1/1999 Hotto 455/280
5,870,670 A 2/1999 Ripley et al.
5,872,446 A 2/1999 Cranford, Jr. et al. 323/315
5,881,375 A 3/1999 Bonds 455/118
5,883,548 A 3/1999 Assard et al. 329/306
5,892,380 A 4/1999 Quist 327/172
5,894,239 A 4/1999 Bonaccio et al. 327/176
5,894,496 A 4/1999 Jones 455/126
5,896,562 A 4/1999 Heinonen 455/76
5,898,912 A 4/1999 Heck et al.
5,900,747 A 5/1999 Brauns 327/9

5,901,054 A 5/1999 Leu et al. 363/41
5,901,187 A 5/1999 Iinuma 375/347
5,901,344 A 5/1999 Opas 455/76
5,901,347 A 5/1999 Chambers et al. 455/234.1
5,901,348 A 5/1999 Bang et al. 455/254
5,901,349 A 5/1999 Guegnaud et al. 455/302
5,903,178 A 5/1999 Miyatsuji et al. 327/308
5,903,187 A 5/1999 Claverie et al. 329/341
5,903,196 A 5/1999 Salvi et al. 331/16
5,903,421 A 5/1999 Furutani et al. 361/58
5,903,553 A 5/1999 Sakamoto et al. 370/338
5,903,595 A 5/1999 Suzuki 375/207
5,903,609 A 5/1999 Kool et al. 375/261
5,903,827 A 5/1999 Kennan et al. 455/326
5,903,854 A 5/1999 Abe et al. 455/575
5,905,449 A 5/1999 Tsubouchi et al. 340/925.69
5,907,149 A 5/1999 Marckini 235/487
5,907,197 A 5/1999 Faulk 307/119
5,909,447 A 6/1999 Cox et al. 370/508
5,911,116 A 6/1999 Nosswitz 455/83
5,911,123 A 6/1999 Shaffer et al. 455/554
5,914,622 A 6/1999 Inoue 327/172
5,915,278 A 6/1999 Mallick 73/658
5,920,199 A 7/1999 Sauer 324/678
5,926,065 A 7/1999 Wakai et al.
5,926,513 A 7/1999 Suominen et al.
5,933,467 A 8/1999 Sehier et al. 375/350
5,937,013 A * 8/1999 Lam et al. 375/340
5,943,370 A 8/1999 Smith 375/334
5,945,660 A 8/1999 Nakasuji et al. 235/462.46
5,949,827 A 9/1999 DeLuca et al.
5,952,895 A 9/1999 McCune, Jr. et al. 332/128
5,953,642 A 9/1999 Feldtkeller et al. 455/195.1
5,955,992 A 9/1999 Shattil
5,959,850 A 9/1999 Lim 363/17
5,960,033 A 9/1999 Shibano et al. 375/207
5,970,053 A 10/1999 Schick et al.
5,982,315 A 11/1999 Bazarjani et al.
5,995,030 A 11/1999 Cabler
5,999,561 A 12/1999 Naden et al.
6,011,435 A 1/2000 Takeyabu et al.
6,014,176 A 1/2000 Nayebi et al.
6,014,551 A 1/2000 Pesola et al.
6,018,262 A 1/2000 Noro et al.
6,018,553 A 1/2000 Sanielevici et al.
6,026,286 A 2/2000 Long
6,028,887 A 2/2000 Harrison et al. 375/206
6,031,217 A 2/2000 Aswell et al.
6,041,073 A 3/2000 Davidovici et al. 375/148
6,047,026 A 4/2000 Chao et al.
6,049,573 A 4/2000 Song
6,049,706 A 4/2000 Cook et al. 455/313
6,054,889 A 4/2000 Kobayashi 327/357
6,061,551 A 5/2000 Sorrells et al. 455/118
6,061,555 A 5/2000 Bultman et al. 455/313
6,067,329 A 5/2000 Kato et al.
6,073,001 A * 6/2000 Sokoler 455/323
6,076,015 A 6/2000 Hartley et al.
6,078,630 A 6/2000 Prasanna
6,081,691 A 6/2000 Renard et al. 455/12.1
6,084,922 A 7/2000 Zhou et al. 375/316
6,085,073 A * 7/2000 Palermo et al. 455/205
6,091,939 A 7/2000 Banh 455/102
6,091,940 A 7/2000 Sorrells et al. 455/118
6,091,941 A 7/2000 Moriyama et al. 455/126
6,094,084 A 7/2000 Abou-Allam et al.
6,098,046 A 8/2000 Cooper et al.
6,098,886 A 8/2000 Swift et al. 235/472.01
6,121,819 A 9/2000 Traylor 327/359
6,125,271 A 9/2000 Rowland, Jr. 455/313
6,144,236 A 11/2000 Vice et al. 327/113
6,144,331 A 11/2000 Jiang
6,144,846 A 11/2000 Durec 455/323
6,147,340 A 11/2000 Levy ..... 250/214 R
6,147,763 A 11/2000 Steinlechner 356/484
6,150,890 A 11/2000 Damgaard et al. 331/14
6,151,354 A 11/2000 Abbey
6,169,733 B1 1/2001 Lee
6,175,728 B1 1/2001 Mitama 455/323
6,178,319 B1 1/2001 Kashima
6,215,475 B1 4/2001 Meyerson et al. 345/173
6,225,848 B1 5/2001 Tilley et al.
6,230,000 B1 5/2001 Tayloe
6,266,518 B1 7/2001 Sorrells et al. 455/118
6,313,685 B1 11/2001 Rabii
6,314,279 B1 11/2001 Mohindra
6,317,589 B1 11/2001 Nash
6,321,073 B1 11/2001 Luz et al.
6,327,313 B1 12/2001 Traylor et al.
6,330,244 B1 12/2001 Swartz et al.
6,353,735 B1 3/2002 Sorrells et al. 455/118
6,363,262 B1 3/2002 McNicol
6,370,371 B1 4/2002 Sorrells et al. 455/323
6,400,963 B1 6/2002 Glöckler et al.
6,421,534 B1 7/2002 Cook et al.
6,459,721 B1 10/2002 Mochizuki et al.
6,516,185 B1 2/2003 MacNally
6,531,979 B1 3/2003 Hynes
6,542,722 B1 4/2003 Sorrells et al.
6,560,301 B1 5/2003 Cook et al.
6,580,902 B1 6/2003 Sorrells et al.
6,600,911 B1 7/2003 Morishige et al.
6,608,647 B1 8/2003 King
6,611,569 B1 8/2003 Schier et al.
6,634,555 B1 10/2003 Sorrells et al.
6,647,250 B1 11/2003 Bultman et al.
6,686,879 B2 2/2004 Shattil
6,687,493 B1 2/2004 Sorrells et al.
6,694,128 B1 2/2004 Sorrells et al.
6,697,603 B1 2/2004 Lovinggood et al.
6,704,549 B1 3/2004 Sorrells et al.
6,704,558 B1 3/2004 Sorrells et al.

FOREIGN PATENT DOCUMENTS

DE 42 37 692 C1 3/1994 ..... H04B/1/26
DE 196 27 640 A1 1/1997 ..... H03D/7/12
DE 196 48 915 A1 6/1998
DE 197 35 798 C1 7/1998 ..... H04L/27/00
EP 0 035 166 A1 9/1981 ..... H04B/1/26
EP 0 087 336 A1 8/1983 ..... H03D/7/12
EP 0 099 265 A1 1/1984 ..... H03D/3/04
EP 0 087 336 B1 7/1986 ..... H03D/7/12
EP 0 254 844 A2 2/1988 ..... H03D/7/00
EP 0 276 130 A2 A3 7/1988 ..... H03D/7/00
EP 0 193 899 B1 6/1990 ..... G01S/7/52
EP 0 380 351 A2 8/1990 ..... H03H/17/04
EP 0 380 351 A3 2/1991 ..... H03H/17/04
EP 0 411 840 A2 2/1991 ..... G01R/33/36
EP 0 423 718 A2 4/1991 ..... H04N/7/01
EP 0 411 840 A3 7/1991 ..... G01R/33/36
EP 0 486 095 A1 5/1992 ..... H03D/3/00
EP 0 423 718 A3 8/1992 ..... H04N/7/01
EP 0 512 748 A2 11/1992 ..... H04N/9/64
EP 0 529 836 A1 3/1993 ..... H03L/7/089
EP 0 548 542 A1 6/1993 ..... H03B/19/14
EP 0 512 748 A3 7/1993 ..... H04N/9/64
EP 0 560 228 A1 9/1993 ..... H03D/7/12
EP 0 632 288 A2 1/1995 ..... G01S/13/75
EP 0 632 577 A1 1/1995 ..... H03D/7/16
EP 0 643 477 A2 A3 3/1995
EP 0 411 840 B1 10/1995 ..... G01R/33/36
EP 0 696 854 A1 2/1996 ..... H04B/1/26

EP	0 632 288	A3	7/1996	G01S/13/75
EP	0 732 803	A1	9/1996	H03D/3/00
EP	0 486 095	B1	2/1997	H03D/3/00
EP	0 782 275	A2	7/1997	H04B/7/02
EP	0 785 635	A1	7/1997	H04B/1/713
EP	0 789 449	A2	8/1997	H03D/7/12
EP	0 795 978	A2	9/1997	H04L/5/06
EP	0 795 955 A2	A3	9/1997	H03D/13/00
EP	0 817 369 A2	A3	1/1998	H03D/7/00
EP	0 837 565	A1	4/1998	H04B/1/69
EP	0 862 274	A1	9/1998	H03M/1/06
EP	0 874 499	A2	10/1998	H04L/25/06
EP	0 512 748	B1	11/1998	H04N/9/64
EP	0 877 476	A1	11/1998	
EP	0 977 351	A1	2/2000	
FR	2 245 130		4/1975	H03K/5/13
FR	2 669 787	A1	5/1992	H03D/7/14
FR	2 743 231	A1	7/1997	H04B/7/12
GB	2 161 344	A	1/1986	H04B/7/12
GB	2 215 945	A	9/1989	H04L/27/00
GB	2 324 919	A	11/1998	H03D/7/18
JP	47-2314		2/1972	
JP	55-66057		5/1980	G06K/7/10
JP	56-114451		9/1981	H04B/7/02
JP	58-7903		1/1983	H03C/1/02
JP	58-133004		8/1983	H03D/1/00
JP	59-144249		8/1984	H04L/27/00
JP	60-58705		4/1985	H03D/7/00
JP	60-130203		7/1985	H03D/7/00
JP	61-30821		2/1986	H04B/1/10
JP	63-54002		3/1988	H03B/19/114
JP	63-65587		3/1988	G06K/7/10
JP	63-153691		6/1988	G06K/17/00
JP	2-39632		2/1990	H04B/7/12
JP	2-131629		5/1990	H04B/7/12
JP	2-276351		11/1990	H04L/27/22
JP	4-123614		4/1992	H03K/19/0175
JP	4-127601		4/1992	H03D/7/00
JP	5-175730		7/1993	H03D/1/00
JP	5-175734		7/1993	H03D/3/00
JP	5-327356		12/1993	H03D/7/00
JP	6-237276		8/1994	H04L/27/20
JP	7-154344		6/1995	H04B/14/06
JP	7-307620		11/1995	H03D/1/18
JP	8-23359		1/1996	H04L/27/20
JP	8-32556		2/1996	H04L/1/04
JP	8-139524		5/1996	H03D/7/00
JP	9-36664		2/1997	
WO	WO 80/01633	A1	8/1980	H04J/1/08
WO	WO 91/18445	A1	11/1991	H03D/7/18
WO	WO 94/05087	A1	3/1994	H03M/1/00
WO	WO 95/01006	A1	1/1995	H03M/1/66
WO	WO 96/02977	A1	2/1996	H04B/1/26
WO	WO 96/08078	A1	3/1996	H03D/3/00
WO	WO 96/39750	A1	12/1996	H04B/1/26
WO	WO 97/08839 A2	A3	3/1997	H04B/1/04
WO	WO 97/38490	A1	10/1997	H03K/7/00
WO	WO 98/00953	A1	1/1998	H04L/27/26
WO	WO 98/24201	A1	6/1998	H04H/1/00
WO	WO 98/40968 A2	A3	9/1998	H03L/7/08
WO	WO 99/23755	A1	5/1999	H03D/7/16
WO	WO 00/31659	A1	6/2000	

OTHER PUBLICATIONS

Dialog File 351 (Derwent WPI) English Lanugage Patent Abstract for FR 2 669 787, 1 page (May 29, 1992–Date of publication of application).

Akos, D.M. et al., "Direct Bandpass Sampling of Multiple Distinct RF Signals," *IEEE Transactions on Communications,* IEEE, vol. 47, No. 7, pp. 983–988 (Jul. 1999).

Patel, M. et al., "Bandpass Sampling for Software Radio Receivers, and the Effect of Oversampling on Aperture Jitter," *VTC 2002,* IEEE, pp. 1901–1905 (2002).

Dines, J.A.B., "Smart Pixel Optoelectronic Receiver Based on a Charge Sensitive Amplifier Design," *IEEE Journal of Selected Topics in Quantum Electronics,* IEEE, vol. 2, No. 1, pp. 117–120 (Apr. 1996).

Simoni, A. et al., "A Digital Camera for Machine Vision," *20th International Conference on Industrial Electronics, Control and Instrumentation,* IEEE, pp. 879–883 (Sep. 1994).

Stewart, R.W. and Pfann, E., "Oversampling and sigma–delta strategies for data conversion," *Electronics & Communications Engineering Journal,* IEEE, pp. 37–47 (Feb. 1998).

Rudell, J.C. et al., "A 1.9–Ghz Wide–Band IF Double Conversion CMOS Receiver for Cordless Telephone Applications," *IEEE Journal of Solid–State Circuits,* IEEE, vol. 32, No. 12, pp. 2071–2088 (Dec. 1997).

English–language Abstract of Japanese Patent Publication No. 09–036664, from http://www1.ipdl.jpo.go.jp, 2 Pages (Feb. 7, 1997—Date of publication of application).

English–language Abstract of Japanese Patent Publication No. 61–030821, 1 Page (Feb. 13, 1986– Date of publication of application).

English–language Abstract of Japanese Patent Publication No. 05–3273356, 1 Page (Dec. 10, 1993—Date of publication of application).

Tayloe, D., "A Low–noise, High–performance Zero IF Quadrature Detector/Preamplifier," *RF Design,* pp. 58, 60, 62 and 69 (Mar. 2003).

Aghvami, H. et al., "Land Mobile Satellites Using the Highly Elliptic Orbits– The UK T–SAT Mobile Payload," *Fourth International Conference on Satellite Systems for Mobile Communications and Navigation,* IEE, pp. 147–153 (Oct. 17–19, 1988).

Akers, N.P. et al., "RF Sampling Gates: a Brief Review," *IEE Proceedings,* IEE, vol. 133, Part A, No. 1, pp. 45–49 (Jan. 1986).

Al–Ahmad, H.A.M. et al., "Doppler Frequency Correction for a Non–Geostationary Communications Satellite. Techniques for CERS and T–SAT," *Electronics Division Colloquium on Low Noise Oscillators and Synthesizers,* IEE, pp. 4/1–4/5 (Jan. 23, 1986).

Ali, I. et al., "Doppler Characterization for LEO Satellites," *IEEE Transactions on Communications,* IEEE, vol. 46, No. 3, pp. 309–313 (Mar. 1998).

Allan, D.W., "Statistics of Atomic Frequency Standards," *Proceedings Of The IEEE Special Issue on Frequency Stability,* IEEE, pp. 221–230 (Feb. 1966).

Allstot, D.J. et al., "MOS Switched Capacitor Ladder Filters," *IEEE Journal of Solid–State Circuits,* IEEE, vol. SC–13, No. 6, pp. 806–814 (Dec. 1978).

Allstot, D.J. and Black Jr. W.C., "Technological Design Considerations for Monolithic MOS Switched–Capacitor Filtering Systems," *Proceedings of the IEEE,* IEEE, vol. 71, No. 8, pp. 967–986 (Aug. 1983).

Alouini, M. et al., "Channel Characterization and Modeling for Ka–Band Very Small Aperture Terminals," *Proceedings Of the IEEE,* IEEE, vol. 85, No. 6, pp. 981–997 (Jun. 1997).

Andreyev, G.A. and Ogarev, S.A., "Phase Distortions of Keyed Millimeter–Wave Signals in the Case of Propagation in a Turbulent Atmosphere," *Telecommunications and Radio Engineering,* Scripta Technica, vol. 43, No. 12, pp. 87–90 (Dec. 1988).

Antonetti, A. et al., "Optoelectronic Sampling in the Picosecond Range," *Optics Communications,* North–Holland Publishing Company, vol. 21, No. 2, pp. 211–214 (May 1977).

Austin, J. et al., "Doppler Correction of the Telecommunication Payload Oscillators in the UK T–SAT," *18th European Microwave Conference,* Microwave Exhibitions and Publishers Ltd., pp. 851–857 (Sep. 12–15, 1988).

Auston, D.H., "Picosecond optoelectronic switching and gating in silicon," *Applied Physics Letters,* American Institute of Physics, vol. 26, No. 3, pp. 101–103 (Feb. 1, 1975).

Baher, H., "Transfer Functions for Switched–Capacitor and Wave Digital Filters," *IEEE Transactions on Circuits and Systems,* IEEE Circuits and Systems Society, vol. CAS–33, No. 11, pp. 1138–1142 (Nov. 1986).

Baines, R., "The DSP Bottleneck," *IEEE Communications Magazine,* IEEE Communications Society, pp. 46–54 (May 1995).

Banjo, O.P. and Vilar, E., "Binary Error Probabilities on Earth–Space Links Subject to Scintillation Fading," *Electronics Letters,* IEE, vol. 21, No. 7, pp. 296–297 (Mar. 28, 1985).

Banjo, O.P. and Vilar, E., "The Dependence of Slant Path Amplitude Scintillations on Various Meteorological Parameters," *Fifth International Conference on Antennas and Propagation* (*ICAP 87*) *Part 2: Propagation,* IEE, pp. 277–280 (Mar. 30–Apr. 2, 1987).

Banjo, O.P. and Vilar, E. "Measurement and Modeling of Amplitude Scintillations on Low–Elevation Earth–Space Paths and Impact on Communication Systems," *IEEE Transactions on Communications,* IEEE Communications Society, vol. COM–34, No. 8, pp. 774–780 (Aug. 1986).

Banjo, O.P. et al., "Tropospheric Amplitude Spectra Due to Absorption and Scattering in Earth–Space Paths," *Fourth International Conference on Antennas and Propagation* (*ICAP 85*), IEE, 77–82 (Apr. 16–19, 1985).

Basili,P. et al., "Case Study of Intense Scintillation Events on the OTS Path," *IEEE Transactions on Antennas and Propagation,* IEEE, vol. 38, No. 1, pp. 107–113 (Jan. 1990).

Basili, P. et al., "Observation of High $C^2$and Turbulent Path Length on OTS Space–Earth Link," *Electronics Letters,* IEE, vol. 24, No. 17, pp. 1114–1116 (Aug. 18, 1988).

Blakey, J.R. et al., "Measurement of Atmospheric Millimetre–Wave Phase Scintillations in an Absorption Region," *Electronics Letters,* IEE, vol. 21, No. 11, pp. 486–487 (May 23, 1985).

Burgueño, A. et al., "Influence of rain gauge integration time on the rain rate statistics used in microwave communications," *annales des télécommunications,* International Union of Radio Science, pp. 522–527 (Sep./Oct. 1988).

Burgueño, A. et al., "Long–Term Joint Statistical Analysis of Duration and Intensity of Rainfall Rate with Application to Microwave Communications," *Fifth International Conference on Antennas and Propagation* (*ICAP 87*) *Part 2: Propagation,* IEE, pp. 198–201 (Mar. 30–Apr. 2, 1987).

Burgueño, A. et al., "Long Term Statistics of Precipitation Rate Return Periods in the Context of Microwave Communications," *Sixth International Conference on Antennas and Propagation* (*ICAP 89*) *Part 2: Propagation,* IEE, pp. 297–310 (Apr. 4–7, 1989).

Burgueño, A. et al., "Spectral Analysis of 49 Years of Rainfall Rate and Relation to Fade Dynamics," *IEEE Transactions on Communications,* IEEE Communications Society, vol. 38, No. 9, pp. 1359–1366 (Sep. 1990).

Catalan, C. and Vilar, E., "Approach for satellite slant path remote sensing," *Electronics Letters,* IEE, vol. 34, No. 12, pp. 1238–1240 (Jun. 11, 1998).

Chan, P. et al., "A Highly Linear 1–GHz CMOS Downconversion Mixer," *European Solid State Circuits Conference,* IEEE Communication Society, pp. 210–213 (Sep. 22–24, 1993).

Copy of Declaration of Michael J. Bultman filed in patent application Ser. No. 09/176,022, which is directed to related subject matter, 2 pages.

Copy of Declaration of Robert W. Cook filed in patent application Ser. No. 09/176,022, which is directed to related subject matter, 2 pages.

Copy of Declaration of Alex Holts filed in patent application Ser. No. 09/176,022, which is directed to related subject matter, 3 pages.

Copy of Declaration of Richard C. Looke filed in patent application Ser. No. 09/176,022, which is directed to related subject matter, 2 pages.

Copy of Declaration of Charley D. Moses, Jr. filed in patent application Ser. No. 09/176,022, which is directed to related subject matter, 2 pages.

Copy of Declaration of Jeffrey L. Parker and David F. Sorrells, with attachment Exhibit 1, filed in patent application Ser. No. 09/176,022, which is directed to related subject matter, 130 pages.

Dewey, R.J. and Collier, C.J., "Multi–Mode Radio Receiver," *Electronics Division Colloquium on Digitally Implemented Radios,* IEE, pp. 3/1–3/5 (Oct. 18, 1985).

Dialog File 347 (JAPIO) English Language Patent Abstract for JP 2–276351, 1 page (Nov. 13, 1990–Date of publication of application).

Dialog File 347 (JAPIO) English Language Patent Abstract for JP 2–131629, 1 page (May 21, 1990–Date of publication of application).

Dialog File 347 (JAPIO) English Language Patent Abstract for JP 2–39632, 1 page (Feb. 8, 1990–Date of publication of application).

Dialog File 348 (European Patents) English Language Patent Abstract for EP 0 785 635 A1, 3 pages (Dec. 26, 1996–Date of publication of application).

Dialog File 348 (European Patents) English Language Patent Abstract for EP 35166 A1, 2 pages (Feb. 18, 1981–Date of publication of application).

"DSO takes sampling rate to 1Ghz," *Electronic Engineering,* Morgan Grampian Publishers, vol. 59, No. 723, pp. 77 and 79 (Mar. 1987).

Erdi, G. and Henneuse, P.R., "A Precision FET–Less Sample–and Hold with High Charge–to–Droop Current Ratio," *IEEE Journal of Solid–State Circuits,* IEEE, vol. SC–13, No. 6, pp. 864–873 (Dec. 1978).

Faulkner, N.D. and Vilar, E., "Subharmonic Sampling for the Measurement of Short Term Stability of Microwave Oscillators," *IEEE Transactions on Instrumentation and Measurement,* IEEE, vol. IM–32, No. 1, pp. 208–213 (Mar. 1983).

Faulkner, N.D. et al., "Sub–Harmonic Sampling for the Accurate Measurement of Frequency Stability of Microwave Oscillators," *CPEM 82 Digest: Conference on Precision Electromagnetic Measurements,* IEE, pp. M–10 and M–11 (1982).

Faulkner, N.D. and Vilar, E., "Time Domain Analysis of Frequency Stability Using Non–Zero Dead–Time Counter Techniques," *CPEM 84 Digest Conference on Precision Electromagnetic Measurements,* IEEE, pp. 81–81 (1984).

Filip, M. and Vilar, E., "Optimum Utilization of the Channel Capacity of a Satellite Link in the Presence of Amplitude Scintillations and Rain Attenuation," *IEEE Transactions on Communications,* IEEE Communications Society, vol. 38, No. 11, pp. 1958–1965 (Nov. 1990).

Fukahori, K., "A CMOS Narrow–Band Signaling Filter with Q Reduction," *IEEE Journal of Solid–State Circuits,* IEEE, vol. SC–19, No. 6, pp. 926–932 (Dec. 1984).

Fukuchi, H. and Otsu, Y., "Available time statistics of rain attenuation on earth–space path," *IEE Proceedings–H: Microwaves, Antennas and Propagation,* IEE, vol. 135, Pt. H, No. 6, pp. 387–390 (Dec. 1988).

Gibbins, C.J. and Chadha, R., "Millimetre–wave propagation through hydrocarbon flame," *IEE Proceedings,* IEE, vol. 134, Pt. H, No. 2, pp. 169–173 (Apr. 1987).

Gilchrist, B. et al., "Sampling hikes performance of frequency synthesizers," *Microwaves & RF,* Hayden Publishing, vol. 23, No. 1, pp. 93–94 and 110 (Jan. 1984).

Gossard, E.E., "Clear weather meterological effects on propagation at frequencies above 1 Ghz," *Radio Science,* American Geophysical Union, vol. 16, No. 5, pp. 589–608 (Sep.–Oct. 1981).

Gregorian, R. et al., "Switched–Capacitor Circuit Design," *Proceedings of the IEEE,* IEEE, vol. 71, No. 8, pp. 941–966 (Aug. 1983).

Groshong et al., "Undersampling Techniques Simplify Digital Radio," *Electronic Design,* Penton Publishing, pp. 67–68, 70, 73–75 and 78 (May 23, 1991).

Grove, W.M., "Sampling for Oscilloscopes and Other RF Systems: Dc through X–Band," *IEEE Transactions on Microwave Theory and Techniques,* IEEE, pp. 629–635 (Dec. 1966).

Haddon, J. et al., "Measurement of Microwave Scintillations on a Satellite Down–Link at X–Band," *Antennas and Propagation,* IEE, pp. 113–117 (1981).

Haddon, J. and Vilar, E., "Scattering Induced Microwave Scintillations from Clear Air and Rain on Earth Space Paths and the Influence of Antenna Aperture," *IEEE Transactions on Antennas and Propagation,* IEEE, vol. AP–34, No. 5, pp. 646–657 (May. 1986).

Hafdallah, H. et al., "2–4 Ghz MESFET Sampler," *Electronics Letters,* IEE, vol. 24, No. 3, pp. 151–153 (Feb. 4, 1988).

Herben, M.H.A.J., "Amplitude and Phase Scintillation Measurements on 8–2 km Line–Of–Sight Path at 30 Ghz," *Electronics Letters,* IEE, vol. 18, No. 7, pp. 287–289 (Apr. 1, 1982).

Hewitt, A. et al., "An 18 Ghz Wideband LOS Multipath Experiment," *International Conference on Measurements for Telecommunication Transmission Systems–MTTS 85,* IEE, pp. 112–116 (Nov. 27–28, 1985).

Hewitt, A. et al., "An Autoregressive Approach to the Identification of Multipath Ray Parameters from Field Measurements," *IEEE Transactions on Communications,* IEEE Communications Society, vol. 37, No. 11, pp. 1136–1143 (Nov. 1989).

Hewitt, A. and Vilar, E., "Selective fading on LOS Microwave Links: Classical and Spread–Spectrum Measurement Techniques," *IEEE Transactions on Communications,* IEEE Communications Society, vol. 36, No. 7, pp. 789–796 (Jul. 1988).

Hospitalier, E., "Instruments for Recording and Observing Rapidly Varying Phenomena" *Science Abstracts,* IEEE, vol. VII, pp. 22–23 (1904).

Howard, I.M. and Swansson, N.S., "Demodulating High Frequency Resonance Signals for Bearing Fault Detection," *The Institution of Engineers Australia Vibration and Noise Conference,* Institution of Engineers, Australia, pp. 115–121 (Sep. 18–20, 1990).

Hu, X., *A Switched–Current Sample–and–Hold Amplifier for FM Demodulation,* Thesis for Master of Applied Science, Dept. of Electrical and Computer Engineering, University of Toronto, UMI Dissertation Services, pp. 1–64 (1995).

Hung, H–L. A. et al., "Characterization of Microwave Integrated Circuits Using An Optical Phase–Locking and Sampling System," *IEEE MTT–S Digest,* IEEE, pp. 507–510, (1991).

Hurst, P.J., "Shifting the Frequency Response of Switched–Capacitor Filters by Nonuniform Sampling," *IEEE Transactions on Circuits and Systems,* IEEE Circuits and Systems Society, vol. 38, No. 1, pp. 12–19 (Jan. 1991).

Itakura, T., "Effects of the sampling pulse width on the frequency characteristics of a sample–and–hold circuit," *IEE Proceedings Circuits, Devices and Systems,* IEEE, vol. 141, No. 4, pp. 328–336 (Aug. 1994).

Janssen, J.M.L., "An Experimental 'Stroboscopic' Oscilloscope for Frequencies up to about 50 Mc/s: I. Fundamentals" *Phillips Technical Review,* Philips Research Laboratories, vol. 12, No. 2, pp. 52–59 (Aug. 1950).

Janssen, J.M.L. and Michels, A.J., "An Experimental 'Stroboscopic' Oscillosocope for Frequencies up to about 50 Mc/s: II. Electrical Build–Up," *Phillips Technical Review,* Phillips Research Laboratories, vol. 12, No. 3, pp. 73–82 (Sep. 1950).

Jondral, V.F. et al., "Doppler Profiles for Communication Satellites," *Frequenz,* Herausberger, pp. 111–116 (May–Jun. 1996).

Kaleh, G.K., "A Frequency Diversity Spread Spectrum System for Communication in the Presence on In–band Interference," *1995 IEEE Globecom,* IEEE Communications Society, pp. 66–70 (1995).

Karasawa, Y. et al., "A New Prediction Method for Tropospheric Scintillation on Earth–Space Paths," *IEEE Transactions on Antennas and Propagation,* IEEE Antennas and Propagation Society, vol. 36, No. 11, pp. 1608–1614 (Nov. 1988).

Kirsten, J. and Fleming, J., "Undersampling reduces data–acquisition costs for select applications," *EDN,* Cahners Publishing, vol. 35, No. 13, pp. 217–222, 224, 226–228 (Jun. 21, 1990).

Lam, W.K. et al., "Measurement of the Phase Noise Characteristics of an Unlocked Communications Channel Identifier," *Proceedings Of the 1993 IEEE International Frequency Control Symposium,* IEEE, pp. 283–288 (Jun. 2–4, 1993).

Lam, W.K. et al., "Wideband sounding of 11.6 Ghz transhorizon channel," *Electronics Letters,* IEE, vol. 30, No. 9, pp. 738–739 (Apr. 28, 1994).

Larkin, K.G., "Efficient demodulator for bandpass sampled AM signals," *Electronics Letters,* IEE, vol. 32, No. 2, pp. 101–102 (Jan. 18, 1996).

Lau, W.H. et al., "Analysis of the Time Variant Structure of Microwave Line–of–sight Multipath Phenomena," *IEEE Global Telecommunications Conference & Exhibition,* IEEE, pp. 1707–1711 (Nov. 28–Dec. 1, 1988).

Lau, W.H. et al., "Improved Prony Algorithm to Identify Multipath Components," *Electronics Letters,* IEE, vol. 23, No. 20, pp. 1059–1060 (Sep. 24, 1987).

Lesage, P. and Audoin, C., "Effect of Dead–Time on the Estimation of the Two–Sample Variance," *IEEE Transactions on Instrumentation and Measurement,* IEEE Instrumentation and Measurement Society, vol. IM–28, No. 1, pp. 6–10 (Mar. 1979).

Liecht, C.A., "Performance of Dual–gate GaAs MESFET's as Gain–Controlled Low–Noise Amplifiers and High Speed Modulators," *IEEE Transactions on Microwave Theory and Techniques,* IEEE Microwave Theory and Techniques Society, vol. MTT–23, No. 6, pp. 461–469 (Jun. 1975).

Linnenbrink, T.E. et al., "A One Gigasample Per Second Transient Recorder," *IEEE Transactions on Nuclear Science,* IEEE Nuclear and Plasma Sciences Society, vol. NS–26, No. 4, pp. 4443–4449 (Aug. 1979).

Liou, M.L., "A Tutorial on Computer–Aided Analysis of Switched–Capacitor Circuits," *Proceedings of the IEEE,* IEEE, vol. 71, No. 8, pp. 987–1005 (Aug. 1983).

Lo, P. et al., "Coherent Automatic Gain Control," *IEE Colloquium on Phase Locked Techniques,* IEE, pp. 2/1–2/6 (Mar. 26, 1980).

Lo, P. et al., "Computation of Rain Induced Scintillations on Satellite Down–Links at Microwave Frequencies," *Third International Conference on Antennas and Propagation* (*ICAP 83*), pp. 127–131 (Apr. 12–15, 1983).

Lo, P.S.L.O. et al., "Observations of Amplitude Scintillations on a Low–Elevation Earth–Space Path," *Electronics Letters,* IEE, vol. 20, No. 7, pp. 307–308 (Mar. 29, 1984).

Madani, K. and Aithison, C.S., "A 20 Ghz Microwave Sampler," *IEEE Transactions on Microwave Theory and Techniques,* IEEE Microwave Theory and Techniques Society, vol. 40, No. 10, pp. 1960–1963 (Oct. 1992).

Marsland, R.A. et al., "130 Ghz GaAs monolithic integrated circuit sampling head," *Appl. Phys. Lett.,* American Institute of Physics, vol. 55, No. 6, pp. 592–594 (Aug. 7, 1989).

Martin, K. and Sedra, A.S., "Switched–Capacitor Building Blocks for Adaptive Systems," *IEEE Transactions on Circuits and Systems,* IEEE Circuits and Systems, Society, vol. cAS–28, No. 6, pp. 576–584 (Jun. 1981).

Marzano, F.S. and d'Auria, G., "Model–based Prediction of Amplitude Scintillation variance due to Clear–Air Trophospheric Turbulence on Earth–Satellite Microwave Links," *IEEE Transactions on Antennas and Propagation,* IEEE Antennas and Propagation Society, vol. 46, No. 10, pp. 1506–1518 (Oct. 1998).

Matricciani, E., "Prediction of fade durations due to rain in satellite communication systems," *Radio Science,* American Geophysical Union, vol. 32, No. 3, pp. 935–941 (May–Jun. 1997).

McQueen, J.G., "The Monitoring of High–Speed Waveforms," *Electronic Engineering,* Morgan Brothers Limited, vol. XXIV, No. 296, pp. 436–441 (Oct. 1952).

Merkelo, J. and Hall, R.D., "Broad–Band Thin–Film Signal Sampler," *IEEE Journal of Solid–State Circuits,* IEEE, vol. SC–7, No. 1, pp. 50–54 (Feb. 1972).

Merlo, U. et al., "Amplitude Scintillation Cycles in a Sirio Satellite–Earth Link," *Electronics Letters,* IEE, vol. 21, No. 23, pp. 1094–1096 (Nov. 7, 1985).

Morris, D., "Radio–holographic reflector measurement of the 30–m millimeter radio telescope at 22 Ghz with a cosmic signal source," *Astronomy and Astrophysics,* Springer–Verlag, vol. 203, No. 2, pp. 399–406 (Sep. (II) 1988).

Moulsley, T.J. et al., "The efficient acquisition and processing of propagation statistics," *Journal of the Institution of Eelctronic and Radio Engineers,* IERE, vol. 55, No. 3, pp. 97–103 (Mar. 1985).

Ndzi, D. et al., "Wide–Band Statistical Characterization of an Over–the–Sea Experimental Transhorizon Link," *IEEE Colloquium on Radio Communications at Microwave and Millimetre Wave Frequencies,* IEE, pp. 1/1–1/6 (Dec. 16, 1996).

Ndzi, D. et al., "Wideband Statistics of Signal Levels and Doppler Spread on an Over–The–Sea Transhorizon Link," *IEE Colloquium on Propagation Characteristics and Related System Techniques for Beyond Line–of–Sight Radio,* IEE, pp. 9/1–9/6 (Nov. 24, 1997).

"New zero IF chipset from Philips," *Electronic Engineering,* United News & Media, vol. 67, No. 825, p. 10 (Sep. 1995).

Ohara, H. et al., "First monolithic PCM filter cuts cost of telecomm systems," *Electronic Design,* Hayden Publishing Company, vol. 27, No. 8, pp. 130–135 (Apr. 12, 1979).

Oppenheim, A.V. et al., *Signals and Systems,* Prentice–Hall, pp. 527–531 and 561–562 (1983).

Ortgies, G., "Experimental Parameters Affecting Amplitude Scintillation Measurements on Satellite Links," *Electronics Letters,* IEE, vol. 21, No. 17, pp. 771–772 (Aug. 15, 1985).

Pässinen et al., "A 2–GHz Subharmonic Sampler for Signal Downconversion," *IEEE Transactions on Microwave Theory and Techniques,* IEEE, vol. 45, No. 12, 7 pages (Dec. 1997).

Peeters, G. et al., "Evaluation of Statistical Models for Clear–Air Scintillation Prediction Using Olympus Satellite Measurements," *International Journal of Satellite Communications,* John Wiley and Sons, vol. 15, No. 2, pp. 73–88 (Mar.–Apr. 1997).

Perrey, A.G. and Schoenwetter, H.K., *NBS Technical Note 1121: A Schottky Diode Bridge Sampling Gate,* U.S. Dept. of Commerce, pp. 1–14 (May 1980).

Poulton, K. et al., "A 1–Ghz 6–bit ADC System," *IEEE Journal of Solid–State Circuits,* IEEE, vol. SC–22, No. 6, pp. 962–969 (Dec. 1987).

Press Release, "Parkervision, Inc. Announces Fiscal 1993 Results," Lippert/Heilshorn and Associates, 2 Pages (Apr. 6, 1994).

Press Release, "Parkervision, Inc. Announces the Appointment of Michael Baker to the New Position of National Sales Manager," Lippert/Heilshorn and Associates, 1 Page (Apr. 7, 1994).

Press Release, "Parkervision's Cameraman Well–Received By Distance Learning Market," Lippert/Heilshorn and Associates, 2 Pages (Apr. 8, 1994).
Press Release, "Parkervision, Inc. Announces First Quarter Financial Results," Lippert/Heilshorn and Associates, 2 Pages (Apr. 26, 1994).
Press Release, "Parkervision, Inc. Announces The Retirement of William H. Fletcher, Chief Financial Officer," Lippert/Heilshorn and Associates, 1 Page (May 11, 1994).
Press Release, "Parkervision, Inc. Announces New Cameraman System II™ At Infocomm Trade Show," Lippert/Heilshorn and Associates, 3 Pages (Jun. 9, 1994).
Press Release, "Parkervision, Inc. Announces Appointments to its National Sales Force," Lippert/Heilshorn and Associates, 2 Pages (Jun. 17, 1994).
Press Release, "Parkervision, Inc. Announces Second Quarter and Six Months Financial Results," Lippert/Heilshorn and Associates, 3 Pages (Aug. 9, 1994).
Press Release, "Parkervision, Inc. Announces Third Quarter and Nine Months Financial Results," Lippert/Heilshorn and Associates, 3 Pages (Oct. 28, 1994).
Press Release, "Parkervision, Inc. Announces First Significant Dealer Sale of Its *Cameraman*® System II," Lippert/Heilshorn and Associates, 2 Pages (Nov. 7, 1994).
Press Release, "Parkervision, Inc. Announces Fourth Quarter and Year End Results," Lippert/Heilshorn and Associates, 2 Pages (Mar. 1, 1995).
Press Release, "Parkervision, Inc. Announces Joint Product Developments With VTEL," Lippert/Heilshorn and Associates, 2 Pages (Mar. 21, 1995).
Press Release, "Parkervision, Inc. Announces First Quarter Financial Results," Lippert/Heilshorn and Associates, 3 Pages (Apr. 28, 1995).
Press Release, "Parkervision Wins Top 100 Product Districts' Choice Award," Parkervision Marketing and Manufacturing Headquarters, 1 Page (Jun. 29, 1995).
Press Release, "Parkervision National Sales Manager Next President of USDLA," Parkervision Marketing and Manufacturing Headquarters, 1 Page (Jul. 6, 1995).
Press Release, "Parkervision Granted New Patent," Parkervision Marketing and Manufacturing Headquarters, 1 Page (Jul. 21, 1995).
Press Release, "Parkervision, Inc. Announces Second Quarter and Six Months Financial Results," Parkervision Marketing and Manufacturing Headquarters, 2 Pages (Jul. 31, 1995).
Press Release, "Parkervision, Inc. Expands Its Cameraman System II Product Line," Parkervision Marketing and Manufacturing Headquarters, 2 Pages (Sep. 22, 1995).
Press Release, "Parkervision Announces New Camera Control Technology," Parkervision Marketing and Manufacturing Headquarters, 2 Pages (Oct. 25, 1995).
Press Release, "Parkervision, Inc. Announces Completion of VTEL/Parkervision Joint Product Line," Parkervision Marketing and Manufacturing Headquarters, 2 Pages (Oct. 30, 1995).
Press Release, "Parkervision, Inc. Announces Third Quarter and Nine Months Financial Results," Parkervision Marketing and Manufacturing Headquarters, 2 Pages (Oct. 30, 1995).
Press Release, "Parkervision's Camerman Personal Locator Camera System Wins Telecon XV Award," Parkervision Marketing and Manufacturing Headquarters, 2 Pages (Nov. 1, 1995).
Press Release, "Parkervision, Inc. Announces Purchase Commitment From VTEL Corporation," Parkervision Marketing and Manufacturing Headquarters, 1 Page (Feb. 26, 1996).
Press Release, "ParkerVision, Inc. Announces Fourth Quarter and Year End Results," Parkervision Marketing and Manufacturing Headquarters, 2 Pages (Feb. 27, 1996).
Press Release, "ParkerVision, Inc. Expands its Product Line," Parkervision Marketing and Manufacturing Headquarters, 2 Pages (Mar. 7, 1996).
Press Release, "ParkerVision, Files Patents for its Research of Wireless Technology," Parkervision Marketing and Manufacturing Headquarters, 1 Page (Mar. 28, 1996).
Press Release, "Parkervision, Inc. Announces First Significant Sale of Its Cameraman® Three–Chip System," Parkervision Marketing and Manufacturing Headquarters, 2 Pages (Apr. 12, 1996).
Press Release, "Parkervision, Inc. Introduces New Product Line For Studio Production Market," Parkervision Marketing and Manufacturing Headquarters, 2 Pages (Apr. 15, 1996).
Press Release, "Parkervision, Inc. Announces Private Placement of 800,000 Shares," Parkervision Marketing and Manufacturing Headquarters, 1 Page (Apr. 15, 1996).
Press Release, "Parkervision, Inc. Announces First Quarter Financial Results," Parkervision Marketing and Manufacturing Headquarters, 3 Pages (Apr. 30, 1996).
Press Release, "ParkerVision's New Studio Product Wins Award," Parkervision Marketing and Manufacturing Headquarters, 2 Pages (Jun. 5, 1996).
Press Release, "Parkervision, Inc. Announces Second Quarter and Six Months Financial Results," Parkervision Marketing and Manufacturing Headquarters, 3 Pages (Aug. 1, 1996).
Press Release, "Parkervision, Inc. Announces Third Quarter and Nine Months Financial Results," Parkervision Marketing and Manufacturing Headquarters, 2 Pages (Oct. 29, 1996).
Press Release, "PictureTel and ParkerVision Sign Reseller Agreement," Parkervision Marketing and Manufacturing Headquarters, 2 Pages (Oct. 30, 1996).
Press Release, "CLI and ParkerVision Bring Enhanced Ease–of–Use to Videoconferencing," CLI/Parkervision, 2 Pages (Jan. 20, 1997).
Press Release, "Parkervision, Inc. Announces Fourth Quarter and Year End Results," Parkervision Marketing and Manufacturing Headquarters, 3 Pages (Feb. 27, 1997).
Press Release, "Parkervision, Inc. Announces First Quarter Financial Results," Parkervision Marketing and Manufacturing Headquarters, 3 Pages (Apr. 29, 1997).
Press Release, "NEC and Parkervision Make Distance Learning Closer," NEC America, 2 Pages (Jun. 18, 1997).
Press Release, "Parkervision Supplies JPL with Robotic Cameras, Cameraman Shot Director for Mars Mission," Parkervision Marketing and Manufacturing Headquarters, 2 pages (Jul. 8, 1997).
Press Release, "ParkerVision and IBM Join Forces to Create Wireless Computer Peripherals," Parkervision Marketing and Manufacturing Headquarters, 2 Pages (Jul. 23, 1997).
Press Release, "ParkerVision, Inc. Announces Second Quarter and Six Months Financial Results," Parkervision Marketing and Manufacturing Headquarters, 3 Pages (Jul. 31, 1997).

Press Release, "Parkervision, Inc. Announces Private Placement of 990,000 Shares," Parkervision Marketing and Manufacturing Headquarters, 2 Pages (Sep. 8, 1997).
Press Release, "Wal–Mart Chooses Parkervision for Broadcast Production," Parkervision Marketing and Manufacturing Headquarters, 2 Pages (Oct. 24, 1997).
Press Release, "Parkervision, Inc. Announces Third Quarter Financial Results," Parkervision Marketing and Manufacturing Headquarters, 3 Pages (Oct. 30, 1997).
Press Release, "ParkerVision Announces Breakthrough in Wireless Radio Frequency Technology," Parkervision Marketing and Manufacturing Headquarters, 3 Pages (Dec. 10, 1997).
Press Release, "Parkervision, Inc. Announces the Appointment of Joseph F. Skovron to the Position of Vice President, Licensing—Wireless Technologies," Parkervision Marketing and Manufacturing Headquarters, 2 Pages (Jan. 9, 1998).
Press Release, "Parkervision Announces Existing Agreement with IBM Terminates—Company Continues with Strategic Focus Announced in December," Parkervision Marketing and Manufacturing Headquarters, 2 Pages (Jan. 27, 1998).
Press Release, "Laboratory Tests Verify Parkervision Wireless Technology," Parkervision Marketing and Manufacturing Headquarters, 2 Pages (Mar. 3, 1998).
Press Release, "Parkervision, Inc. Announces Fourth Quarter and Year End Financial Results," Parkervision Marketing and Manufacturing Headquarters, 3 Pages (Mar. 5, 1998).
Press Release, "Parkervision Awarded Editors' Pick of Show for NAB 98," Parkervision Marketing and Manufacturing Headquarters, 2 Pages (Apr. 15, 1998).
Press Release, "Parkervision, Announces First Quarter Financial Results," Parkervision Marketing and Manufacturing Headquarters, 3 Pages (May 4, 1998).
Press Release, "Parkervision 'DIRECT2DATA' Introduced in Response to Market Demand," Parkervision Marketing and Manufacturing Headquarters, 3 pages (Jul. 9, 1998).
Press Release, "Parkervision Expands Senior Management Team" Parkervision Marketing and Manufacturing Headquarters, 2 Pages (Jul. 29, 1998).
Press Release, "Parkervision Announces Second Quarter and Six Month Financial Results," Parkervision Marketing and Manufacturing Headquarters, 4 Pages (Jul. 30, 1998).
Press Release, "Parkervision Announces Third Quarter and Nine Month Financial Results," Parkervision Marketing and Manufacturing Headquarters, 3 Pages (Oct. 30, 1998).
Press Release, "Questar Infocomm, Inc. Invests $5 Million in Parkervision Common Stock," Parkervision Marketing and Manufacturing Headquarters, 3 Pages (Dec. 2, 1998).
Press Release, "Parkervision Adds Two New Directors," Parkervision Marketing and Manufacturing Headquarters, 2 Pages (Mar. 5, 1999).*
Press Release, "Parkervision Announces Fourth Quarter and Year End Financial Results," Parkervision Marketing and Manufacturing Headquarters, 3 Pages (Mar. 5, 1999).*
Press Release, "Joint Marketing Agreement Offers New Automated Production Solution," Parkervision Marketing and Manufacturing Headquarters, 2 Pages (Apr. 13, 1999).*
"Project COST 205: Scintillations in Earth–satellite links," *Alta Frequenza: Scientific Review in Electronics,* AEI, vol. LIV, No. 3, pp. 209–211 (May–Jun., 1985).*
Razavi, B., *RF Microelectronics,* Prentice–Hall, pp. 147–149 (1998).*
Reeves. R.J.D., "The Recording and Collocation of Waveforms (Part 1)," *Electronic Engineering,* Morgan Brothers Limited, vol. 31, No. 373, pp. 130–137 (Mar. 1959).
Reeves. R.J.D., "The Recording and Collocation of Waveforms (Part 2)," *Electronic Engineering,* Morgan Brothers Limited, vol. 31, No. 374, pp. 204–212 (Apr. 1959).
Rein, H.M. and Zahn, M., "Subnanosecond–Pulse Generator with Variable Pulsewidth Using Avalanche Transistors," *Electroncis Letters,* IEE, vol. 11, No. 1, pp. 21–23 (Jan. 9, 1975).
Riad, S.M. and Nahman, N.S., "Modeling of the Feed–through Wideband (DC to 12.4 Ghz) Sampling–Head," *IEEE MTT–S International Microwave Symposium Digest,* IEEE, pp. 267–269 (Jun. 27–29, 1978).
Rizzoli, V. et al., "Computer–Aided Noise Analysis of MESFET and HEMT Mixers," *IEEE Transactions on Microwave Theory and Techniques,* IEEE, vol. 37, No. 9, pp. 1401–1410 (Sep. 1989).
Rowe, H.E., *Signals and Noise in Communication Systems,* D. Van Nostrand Company, Inc., Princeton, New Jersey including, for example, Chapter V, Pulse Modulation Systems (1965).
Rücker, F. and Dintelmann, F., "Effect of Antenna Size on OTS Signal Scintillations and Their Seasonal Dependence," *Electronics Letters,* IEE, vol. 19, No. 24, pp. 1032–1034 (Nov. 24, 1983).
Russell, R. and Hoare, L., "Millimeter Wave Phase Locked Oscillators," *Military Microwaves '78 Conference Proceedings,* Microwave Exhibitions and Publishers, pp. 238–242 (Oct. 25–27, 1978).
Sabel, L.P., "A DSP Implementation of a Robust Flexible Receiver/Demultiplexer for Broadcast Data Satellite Communications," *The Institution of Engineers Australia Communications Conference,* Institution of Engineers, Australia, pp. 218–223 (Oct. 16–18, 1990).
Salous, S., "IF digital generation of FMCW waveforms for wideband channel characterization," *IEE Proceedings–I,* IEE, vol. 139, No. 3, pp. 281–288 (Jun. 1992).
"Sampling Loops Lock Sources to 23 Ghz," *Microwaves & RF,* Penton Publishing, p. 212 (Sep. 1990).
Sasikumar, M. et al., "Active Compensation in the Switched–Capacitor Biquad," *Proceedings of the IEEE,* IEEE, vol. 71, No. 8, pp. 1008–1009 (Aug. 1983).
Saul, P.H., "A GaAs MESFET Sample and Hold Switch," *Fifth European Solid State Circuits Conference–ESSCIRC 79,* IEEE, pp. 5–7 (1979).
Shen, D.H. et al., "A 900–MHZ RF Front–End with Integrated Discrete–Time Filtering," *IEEE Journal of Solid State Circuits,* IEEE Solid–State Circuits Council, vol. 31, No. 12, pp. 1945–1954 (Dec. 1996).
Shen, X.D. and Vilar, E., "Anomalous transhorizon propagation and meterological processes of a multilink path," *Radio Science,* American Geophysical Union, vol. 30, No. 5, pp. 1467–1479 (Sep.–Oct. 1995).
Shen X. and Tawfik, A.N., "Dynamic Behaviour of Radio Channels Due to Trans–Horizon Propagation Mechanisms," *Electronics Letters,* IEE, vol. 29, No. 17, pp. 1582–1583 (Aug. 19, 1993).
Shen, X. et al., "Modeling Enhanced Spherical Diffraction and Troposcattering on a Transhorizon Path with aid of the parabolic Equation and Ray Tracing Methods," *IEE Colloquium on Common modeling techniqes for electromagnetic wave and acoustic wave propagation,* IEE, pp. 4/1–4/7 (Mar. 8, 1996).

Shen, X. and Vilar, E., "Path loss statistics and mechanisms of transhorizon propagation over a sea path," *Electronics Letters,* IEE, vol. 32, No. 3, pp. 259–261 (Feb. 1, 1996).
Shen, D. et al., "A 900 MHZ Integrated Discrete–Time Filtering RF Front–End," *IEEE International Solid State Circuits Conference,* IEEE, vol. 39, pp. 54–55 and 417 (Feb. 1996).
Spillard, C. et al., "X–Band Tropospheric Transhorizon Propagation Under Differing Meteorological Conditions," *Sixth International Conference on Antennas and Propagation (ICAP 89) Part 2: Propagation,* IEE, pp. 451–455 (Apr. 4–7, 1989).
Stafford, K.R. et al., "A Complete Monolithic Sample/Hold Amplifier," *IEEE Journal of Solid–State Circuits,* IEEE, vol. SC–9, No. 6, pp. 381–387 (Dec. 1974).
Staruk, W. Jr. et al., "Pusing HF Data Rates," *Defense Electronics,* pp. 211, 213, 215, 217, 220 and 222 (May 1985).
Stephenson, A.G., "Digitizing multiple RF signals requires an optimum sampling rate," *Electronics,* pp. 106–110 (Mar. 27, 1972).
Sugarman, R., "Sampling Oscilloscope for Statistically Varying Pulses," *The Review of Scientific Instruments,* American Institute of Physics, vol. 28, No. 11, pp. 933–938 (Nov. 1957).
Sylvain, M., "Experimental probing of multipath microwave channels," *Radio Science,* American Geophysical Union, vol. 24, No. 2, pp. 160–178 (Mar.–Apr. 1989).
Takano, T., "Novel GaAs Pet Phase Detector Operable To Ka Band," *IEEE MT–S Digest,* IEEE, pp. 381–383 (1984).
Tan, M.A., "Biquadratic Transconductance Switched–Capacitor Filters," *IEEE Transactions on Circuits and Systems–I: Fundamental Theory and Applications,* IEEE Circuits and Systems Society, vol. 40, No. 4, pp. 272–275 (Apr. 1993).
Tanaka, K. et al., "Single Chip Multisystem AM Stereo Decoder IC," *IEEE Transactions on Consumer Electronics,* IEEE Consumer Electronics Society, vol. CE–32, No. 3, pp. 482–496 (Aug. 1986).
Tawfik, A.N., "Amplitude Duration and Predictability of Long Hop Trans–Horizon X–band Signals Over the Sea," *Electronics Letters,* IEE, vol. 28, No. 6, pp. 571–572 (Mar. 12, 1992).
Tawfik, A.N. and Vilar, E., "Correlation of Transhorizon Signal Level Strength with Localized Surface Meterological Parameters," *Eight International Conference on Antennas and Propagation,* Electronics Division of the IEE, pp. 335–339 (Mar. 30–Apr. 2, 1993).
Tawfik, A.N. and Vilar, E., "Dynamic Structure of a Transhorizon Signal at X–band Over a Sea Path," *Sixth International Conference on Antennas and Propagation (ICAP) Part 2: Propagation,* IEE, pp. 446–450 (Apr. 4–7, 1989).
Tawfik, A.N. and Vilar, E., "Statistics of Duration and Intensity of Path Loss in a Microwave Transhorizon Sea–Path," *Electronics Letters,* IEE, vol. 26, No. 7, pp. 474–476 (Mar. 29, 1990).
Tawfik, A.N. and Vilar, E., "X–Band Transhorizon Measurements of CW Transmissions Over the Sea–Part 1: Path Loss, Duration of Events, and their Modeling," *IEEE Transactions on Antennas and Propagation,* IEEE Antennas and Propagation Society, vol. 41, No. 11, pp. 1491–1500 (Nov. 1993).
Temes, G.C. and Tsividis, T., "The Special Section on Switched–Capacitor Circuits," *Proceedings of the IEEE,* IEEE, vol. 71, No. 8, pp. 915–916 (Aug. 1983).
Thomas, G.B., *Calculus and Analytic Geometry,* Third Edition, Addison–Wesley Publishing, pp. 119–133 (1960).
Tomassetti, Q., "An Unusual Microwave Mixer," *16th European Microwave Conference,* Microwave Exhibitions and Publishers, pp. 754–759 (Sep. 8–12, 1986).
Tortoli, P. et al., "Bidirectional Doppler Signal Analysis Based on a Single RF Sampling Channel," *IEEE Transactions on Ultrasonics, Ferroelectrics, and Frequency Control,* IEEE Ultrasonics, Ferroelectrics, and Frequency Control Society, vol. 41, No. 1, pp. 1–3 (Jan. 1984).
Tsividis, Y. and Antognetti, P. (Ed.), *Design of MOS VLSI Circuits for Telecommunications,* Prentice–Hall, p. 304 (1985).
Tsividis, Y., "Principles of Operation and Analysis of Switched–Capacitor Circuits," *Proceedings of the IEEE,* IEEE, vol. 71, No. 8, pp. 926–940 (Aug. 1983).
Tsurumi, H. and Maeda, T., "Design Study on a Direct Conversion Receiver Front–End for 280 MHZ, 900 MHZ, and 2.6 Ghz Band Radio Communications Systems," *41st IEEE Vehicular Technology Conference,* IEEE Vehicular Technology Society, pp. 457–462 (May. 19–22, 1991).
Valdmanis, J.A. et al., "Picosecond and Subpicosend Optoelectronics for Measurements of Future High Speed Electronic Devices," *IEDM Technical Digest,* IEEE pp. 597–600 (Dec. 5–7, 1983).
van de Kamp, M.M.J.L., "Asymmetric signal level distribution due to tropospheric scintillation," *Electronics Letters,* IEE, vol. 34, No. 11, pp. 1145–1146 (May 28, 1998).
Vasseur, H. and Vanhoenacker, D., "Characterization of tropospheric turbulent layers from radiosonde data," *Electronics Letters,* IEE, vol. 34, No. 4, pp. 318–319 (Feb. 19, 1998).
Verdone, R., "Outage Probability Analysis for Short–Range Communication Systems at 60 Ghz in ATT Urban Environments," *IEEE Transactions on Vehicular Technology,* IEEE Vehicular Technology Society, vol. 46, No. 4, pp. 1027–1039 (Nov. 1997).
Vierira–Ribeiro, S.A., *Single–IF DECT Receiver Architecture using a Quadrature Sub–Sampling Band–Pass Sigman–Delta Modulator,* Thesis for Degree of Master's of Engineering, Carleton University, UMI Dissertation Services, pp. 1–180 (Apr. 1995).
Vilar, E. et al., "A Comprehensive/Selective MM–Wave Satellite Downlink Experiment on Fade Dynamics," *Tenth International Conference on Antennas and Propagation,* Electronics Division of the IEE, pp. 2.98–2.101 (Apr. 14–17, 1997).
Vilar, E. et al., "A System to Measure LOS Atmospheric Transmittance at 19 Ghz," AGARD Conference Proceedings No. 346:*Characteristics of the Lower Atmosphere Influencing Radio Wave Propagation,* AGARD, pp. 8–1–8–16 (Oct. 4–7, 1983).
Vilar, E. and Smith, H., "A Theoretical and Experimental Study of Angular Scintillations in Earth Space Paths," *IEEE Transactions on Antennas and Propagation,* IEEE, vol. AP–34, No. 1, pp. 2–10 (Jan. 1986).
Vilar, E. et al., "A Wide Band Transhorizon Experiment at 11.6 Ghz," *Eighth International Conference on Antennas and Propagation,* Electronics Division of the IEE, pp. 441–445 (Mar. 30–Apr. 2, 1993).
Vilar, E. and Matthews, P.A., "Amplitude Dependence of Frequency in Oscillators," *Electronics Letters,* IEEE, vol. 8, No. 20, pp. 509–511 (Oct. 5, 1972).

Vilar, E. et al., "An experimental mm–wave receiver system for measuring phase noise due to atmospheric turbulence," *Proceedings of the 25th European Microwave Conference,* Nexus House, pp. 114–119 (1995).

Vilar, E. and Burgueño, A., "Analysis and Modeling of Time Intervals Between Rain Rate Exceedances in the Context of Fade Dynamics," *IEEE Transactions on Communications,* IEEE Communications Society, vol. 39, No. 9, pp. 1306–1312 (Sep. 1991).

Vilar, E. et al., "Angle of Arrival Fluctuations in High and Low Elevation Earth Space Paths," *Fourth International Conference on Antennas and Propagation* (*ICAP 85*), Electronics Division of the IEE, pp. 83–88 (Apr. 16–19, 1985).

Vilar, E., "Antennas and Propagation: A Telecommunications Systems Subject," *Electronics Division Colloquium on Teaching Antennas and Propagation to Undergraduates,* IEE, pp. 7/1–7/6 (Mar. 8, 1988).

Vilar, E. et al., "CERS*. Millimetre–Wave Beacon Package and Related Payload Doppler Correction Strategies," *Electronics Division Colloquium on CERS–Communications Engineering Research Satellite,* IEE, pp. 10/1–10/10 (Apr. 10, 1984).

Vilar, E. and Moulsley, T.J., "Comment and Reply: Probability Density Function of Amplitude Scintillations," *Electronics Letters,* IEE, vol. 21, No. 14, pp. 620–622 (Jul. 4, 1985).

Vilar, E. et al., "Comparison of Rainfall Rate Duration Distributions for ILE–IFE and Barcelona," *Electronics Letters,* IEE, vol. 28, No. 20, pp. 1922–1924 (Sep. 24, 1992).

Vilar, E., "Depolarization and Field Transmittances in Indoor Communications," *Electronics Letters,* IEE, vol. 27, No. 9, pp. 732–733 (Apr. 25, 1991).

Vilar, E. and Larsen, J.R., "Elevation Dependence of Amplitude Scintillations on Low Elevation Earth Space Paths," *Sixth International Conference on Antennas and Propagation* (*ICAP 89*) *Part 2: Propagation,* IEE, pp. 150–154 (Apr. 4–7, 1989).

Vilar, E. et al., "Experimental System and Measurements of Transhorizon Signal Levels at 11 Ghz," *18th European Microwave Conference,* Microwave Exhibitions and Publishers Ltd., pp. 429–435 (Sep. 12–15, 1988).

Vilar, E. and Matthews, P.A., "Importance of Amplitude Scintillations in Millimetric Radio Links," *Proceedings of the 4th European Microwave Conference,* Microwave Exhibitions and Publishers, pp. 202–206 (Sep. 10–13, 1974).

Vilar, E. and Haddon, J., "Mesurement and Modeling of Scintillation Intensity to Estimate Turbulence Parameters in an Earth–Space Path," *IEEE Transactions on Antennas and Propagation,* IEEE Antennas and Propagation Society, vol. AP–32, No. 4, pp. 340–346 (Apr. 1984).

Vilar, E. and Matthews, P.A., "Measurement of Phase Fluctuations on Millimetric Radiowave Propagation," *Electronics Letters,* IEE, vol. 7, No. 18, pp. 566–568 (Sep. 9, 1971).

Vilar, E. and Wan, K.W., "Narrow and Wide Band Estimates of Field Strength for Indoor Communications in the Millimetre Band," *Electronics Division Colloquium on Radiocommunications in the Range 30–60 Ghz,* IEE, pp. 5/1–5/8 (Jan. 17, 1991).

Vilar, E. and Faulkner, N.D., "Phase Noise and Frequency Stability Measurements, Numerical Techniques and Limitations," *Electronics Division Colloquium on Low Noise Oscillators and Synthesizer,* IEE, 5 pages (Jan. 23, 1986).

Vilar, E. and Senin, S., "Propagation phase noise identified using 40 Ghz satellite downlink," *Electronics Letters,* IEE, vol. 33, No. 22, pp. 19901–1902 (Oct. 23, 1997).

Vilar, E. et al., "Scattering and Extinction: Dependence Upon Raindrop Size Distribution in Temperate (Barcelona) and Tropical (Belem) Regions," *Tenth International Conference on Antennas and Propagation,* Electronics Divison of the IEE, pp. 2.230–2.233 (Apr. 14–17, 1997).

Vilar, E. and Haddon, J., "Scintillation Modeling and Measurement—A Tool for Remote–Sensing Slant Paths," *AGARD Conference Proceedings No. 332: Propagation Aspects of Frequency Sharing, Interference And System Diversity,* AGARD, pp. 27–1–27–13 (Oct. 18–22, 1982).

Vilar, E., "Some Limitation on Digital Transmission through Turbulent Atmosphere," *International Conference on Satellite Communication Systems Technology,* Electronics Division of the IEE (Apr. 7–10, 1975).

Vilar, E. and Matthews, P.A., "Summary of Scintillation Observations in a 36 Ghz Link Across London," *International Conference on Antennas and Propagation Part 2: Propagation,* IEE, pp. 36–40 (Nov. 28–30, 1978).

Vilar, E. et al., "Wideband Characterization of Scattering Channels," *Tenth International Conference on Antennas and Propatation,* Electronics Division of the IEE, pp. (Apr. 14–17, 1997).

Vollmer, A., "Complete GPS Receiver Fits on Two Chips," *Electronic Design,* Penton Publishing, pp. 50, 52, 54 and 56 (Jul. 6, 1998).

Voltage and Time Resolution in Digitizing Oscilloscopes: Application Note 348, Hewlett Packard, pp. 1–11 (Nov. 1986).

Wan, K.W. et al., "A Novel Approach to the Simultaneous Measurement of Phase and Amplitude Noises in Oscillator," *Proceedings of the 19th European Microwave Conference,* Microwave Exhibitions and Publishers Ltd., pp. 809–813 (Sep. 4–7, 1989).

Wan, K.W. et al., "Extended Variances and Autoregressive/Moving Average Algorithm for the Measurement and Synthesis of Oscillator Phase Noise," *Proceedings Of the 43rd Annual Symposium on Frequency Control,* IEEE, pp. 331–335 (1989).

Wan, K.W. et al., "Wideband Transhorizon Channel Sounder at 11 Ghz," *Electronics Division Colloquium on High Bit Rate UHF/SHF Channel Sounders—Technology and Measurement,* IEE, pp. 3/1–3/5 (Dec. 3, 1993).

Wang, H., "A 1–V Multigigaherz RF Mixer Core in 0.5–μm CMOS," *IEEE Journal of Solid–State Circuits,* IEEE Solid–State Circuits Society, vol. 33, No. 12, pp. 2265–2267 (Dec. 1998).

Watson, A.W.D. et al., "Digital Conversion and Signal Processing for High Performance Communications Receivers," *Digital Processing of Signals in Communications*, Institution of Electronic and Radio Engineers, pp. 367–373 (April 22nd–26th, 1985).

Weast, R.C. et al. (Ed.), *Handbook of Mathematical Tables,* Second Edition, The Chemical Rubber Co., pp. 480–485 (1964).

Wiley, R.G., "Approximate FM Demodulation Using Zero Crossings," *IEEE Transactions on Communications,* IEEE, vol. COM–29, No. 7, pp. 1061–1065 (Jul. 1981).

Worthman, W., "Convergence . . . Again," *RF Design,* Primedia, p. 102 (Mar. 1999).

Young, I.A. and Hodges, D.A., "MOS Switched–Capacitor Analog Sampled–Data Direct–Form Recursive Filters," *IEEE Journal of Solid–State Circuits,* IEEE, vol. SC–14, No. 6, pp. 1020–1033 (Dec. 1979).
Translation of Specification and Claims of FR Patent No. 2245130, 3 pages.
Fest, Jean–Pierre, "Le Convertisseur A/N Revolutionne Le Recepteur Radio," *Electronique,* No. 54, pp. 40–42 (Dec. 1995).
Translation of DE Patent No 35 41 031 A1, 22 pages.
Translation of EP Patent No. 0 732 803 A1, 9 pages.
Fest, Jean–Pierre, "The A/D Converter Revolutionized the Radio Receiver," *Electronique,* No. 54, 3 pages (Dec. 1995). (Translation of Doc. AQ50).
Translation of German Patent No. DE 197 35 798 C1, 8 pages.
Miki, S. and Nagahama, R., *Modulation System II,* Common Edition 7, Kyoritsu Publishing Co., Ltd., pp. 146–154 (Apr. 30, 1956).
Miki, S. and Nagahama, R., *Modulation System II,* Common Edition 7, Kyoritsu Publishing Co., Ltd., pp. 146–149 (Apr. 30, 1956). (Partial Translation of Doc. AQ51).
Rabiner, L.R. and Gold, B., *Theory And Application Of Digital Signal Processing,* Prentice–Hall, Inc. pp. xiii–xii and 40–46 (1975).
English–language Abstract of Japanese Patent Publication No. 08–032556, from http://www1.ipdl,jpo.go.jp, 2 Pages (Feb. 2, 1996—Date of publication of application).
English–language Abstract of Japanese Patent Publication No. 08–139524, from http://www1.ipdl,jpo.go.jp, 2 Pages (May 31, 1996—Date of publication of application).
English–language Abstract of Japanese Patent Publication No. 59–144249, from http://www1.ipdl,jpo.go.jp, 2 Pages (Aug. 18, 1984—Date of publication of application).
English–language Abstract of Japanese Patent Publication No. 63–054002, from http://www1.ipdl,jpo.go.jp, 2 Pages (Mar. 8, 1988—Date of publication of application).
English–language Abstract of Japanese Patent Publication No. 06–237276, from http://www1.ipdl,jpo.go.jp, 2 pages (Aug. 23, 1994—Date of publication of application).
English–language Abstract of Japanese Patent Publication No. 08–023359, from http://www1.ipdl,jpo.go.jp, 2 Pages (Jan. 23, 1996—Date of publication of application).
Partial Translation of Japanese Patent Publication No. 47–2314, 3 pages.
Partial Translation of Japanese Patent Publication No. 58–7903, 3 pages.
English–language Abstract of Japanese Patent Publication No. 58–133004, from http://www1.ipdl,jpo.go.jp, 2 Pages (Aug. 8, 1993—Date publication of application).
English–language Abstract of Japanese Patent Publication No. 60–058705, from http://www1.ipdl,jpo.go.jp, 2 Pages (Apr. 4, 1985—Date of publication of application).
English–language Abstract of Japanese Patent Publication No. 04–123614, from http://www1.ipdl,jpo.go.jp, 2 Pages (Apr. 23, 1992—Date publication of application).
English–language Abstract of Japanese Patent Publication No. 04–127601, from http://www1.ipdl,jpo.go.jp, 2 Pages (Apr. 28, 1992—Date of publication of application).
English–language Abstract of Japanese Patent Publication No. 05–175730, from http://www1.ipdl,jpo.go.jp, 2 Pages (Jul. 13, 1993—Date of publication of application).
English–language Abstract of Japanese Patent Publication No. 05–175734, from http://www1.ipdl,jpo.go.jp, 2 Pages (Jul. 13, 1993—Date of publication of application).
English–language Abstract of Japanese Patent Publication No. 07–154344, from http://www1.ipdl,jpo.go.jp, 2 Pages (Jun. 16, 1995—Date of publication of application).
English–language Abstract of Japanese Patent Publication No. 07–307620, from http://www1.ipdl,jpo.go.jp, 2 Pages (Nov. 21, 1995—Date of publication of application).
Oppenheim, A.V. and Schafer, R.W., *Digital Signal Processing,* Prentice–Hall, pp. vii–x, 6–35, 45–78, 87–121 and 136–165 (1975).
English–language Abstract of Japanese Patent Publication No. 55–066057, from http://www1.ipdl,jpo.go.jp, 1 Page (May 19, 1980—Date of publication of application).
English–language Abstract of Japanese Patent Publication No. 63–065587, from http://www1.ipdl,jpo.go.jp, 1 Page (Mar. 24, 1988—Date of publication of application).
English–language Abstract of Japanese Patent Publication No. 63–153691, from http://www1.ipdl,jpo.go.jp, 1 Page (Jun. 27, 1988—Date of publication of application).
Simoni, A. et al., "A Single–Chip Optical Sensor with Analog Memory for Motion Detection," *IEEE Journal of Solid–State Circtuits*, IEEE, vol. 30, No. 7, pp. 800–806 (Jul. 1995).
English Translation of German Patent Publication No. DE 196 48 915 A1, 10 pages.

* cited by examiner

FIG. 1A

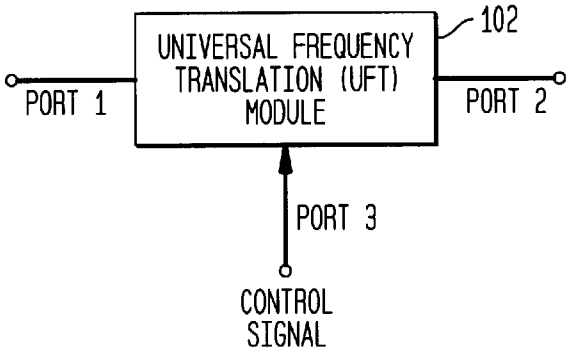

FIG. 1B

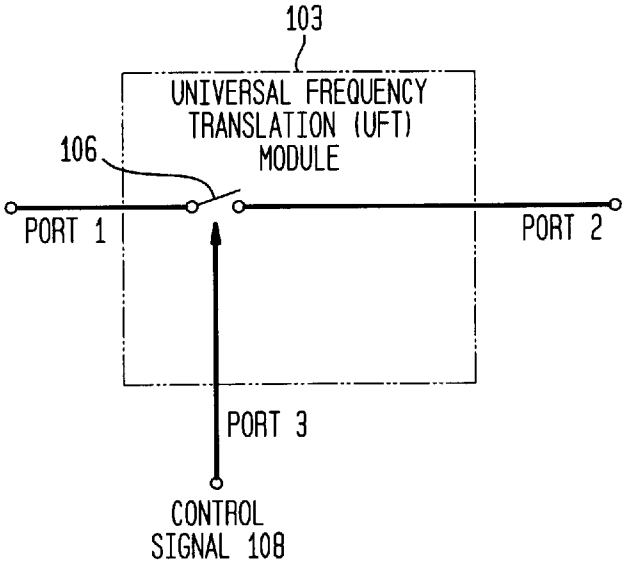

FIG. 1C

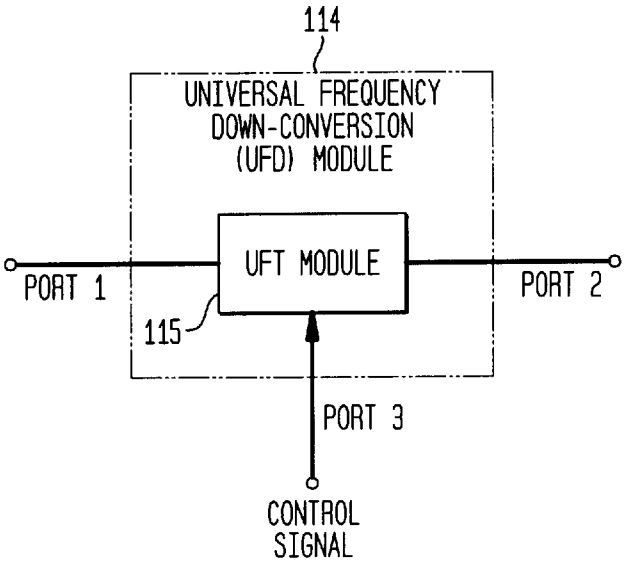

FIG. 1D

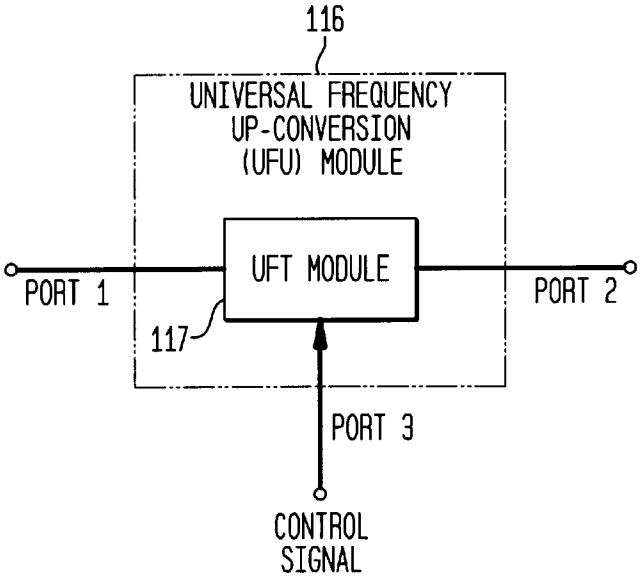

FIG. 2

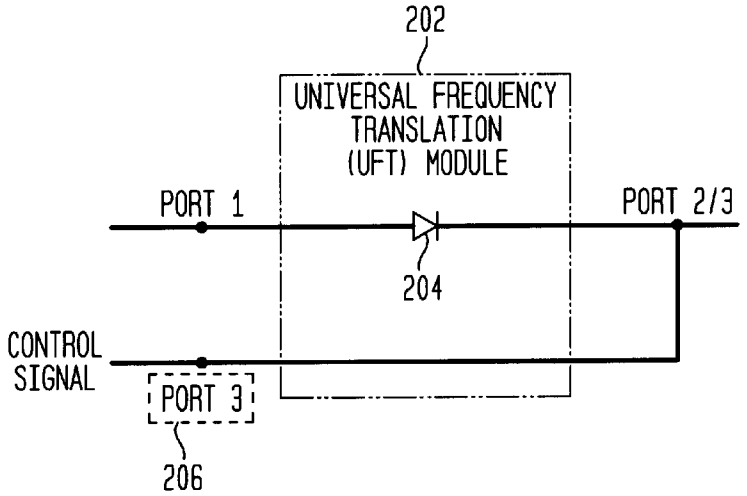

FIG. 3

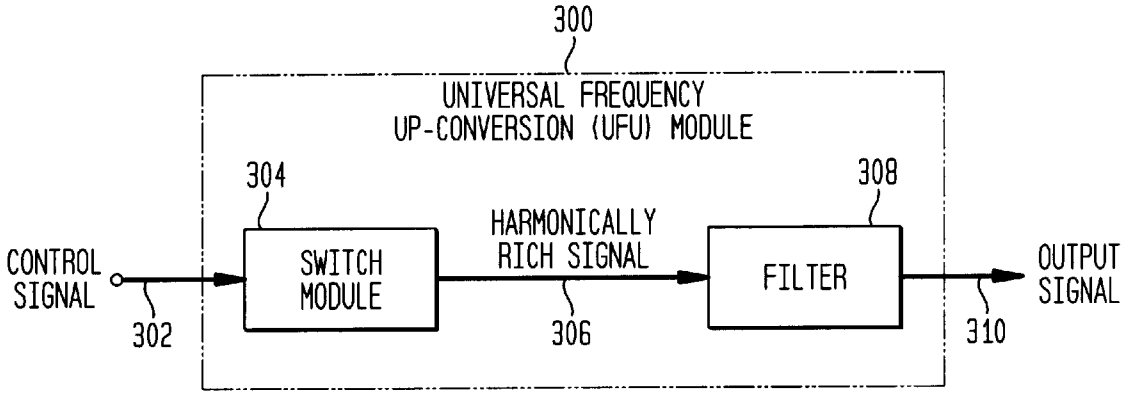

FIG. 4

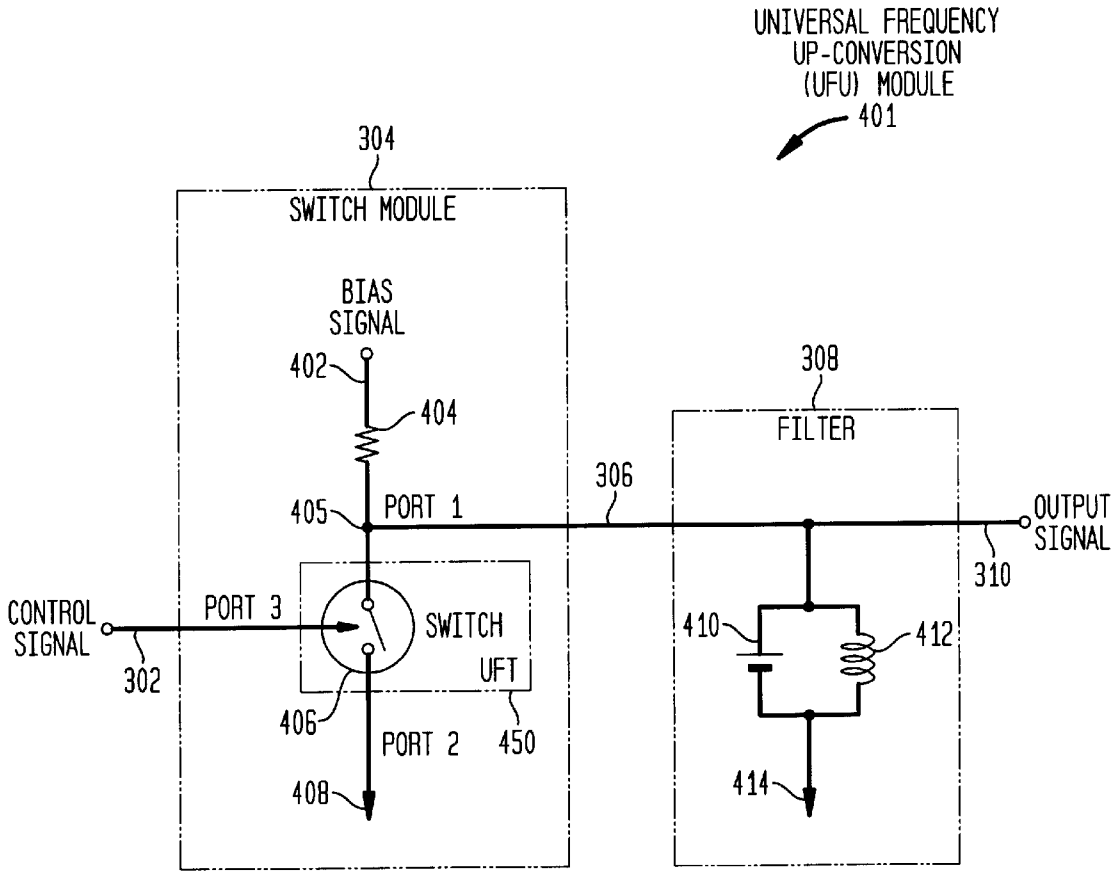
UNIVERSAL FREQUENCY
UP-CONVERSION
(UFU) MODULE
401
304
SWITCH MODULE
BIAS
SIGNAL
402
404
405
PORT 1
306
308
FILTER
OUTPUT
SIGNAL
310
CONTROL
SIGNAL
302
PORT 3
SWITCH
UFT
406
PORT 2
450
408
410
412
414

FIG. 5

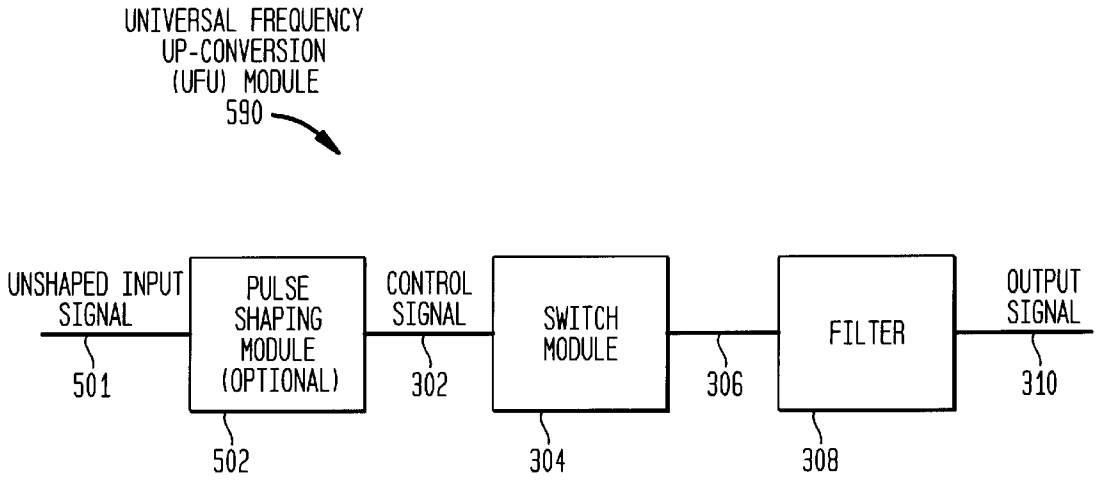
UNIVERSAL FREQUENCY
UP-CONVERSION
(UFU) MODULE
590
UNSHAPED INPUT
SIGNAL
501
PULSE
SHAPING
MODULE
(OPTIONAL)
502
CONTROL
SIGNAL
302
SWITCH
MODULE
304
306
FILTER
308
OUTPUT
SIGNAL
310

FIG. 6A

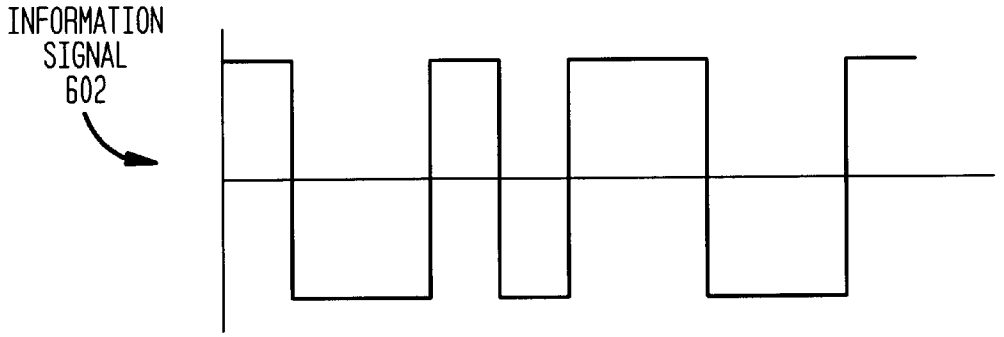

FIG. 6B

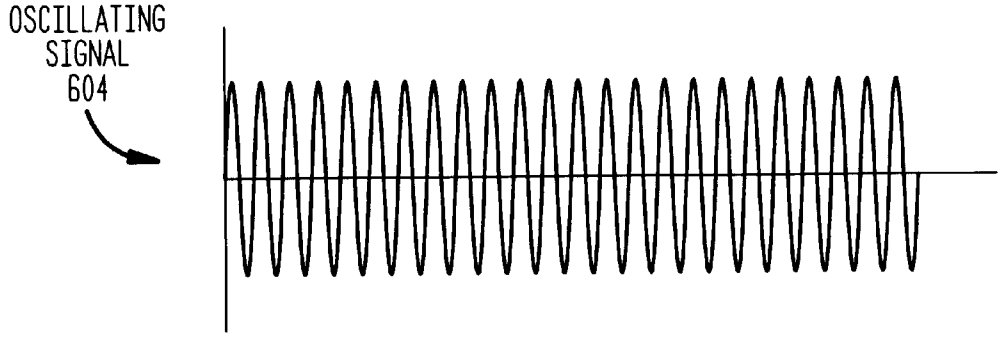

FIG. 6C

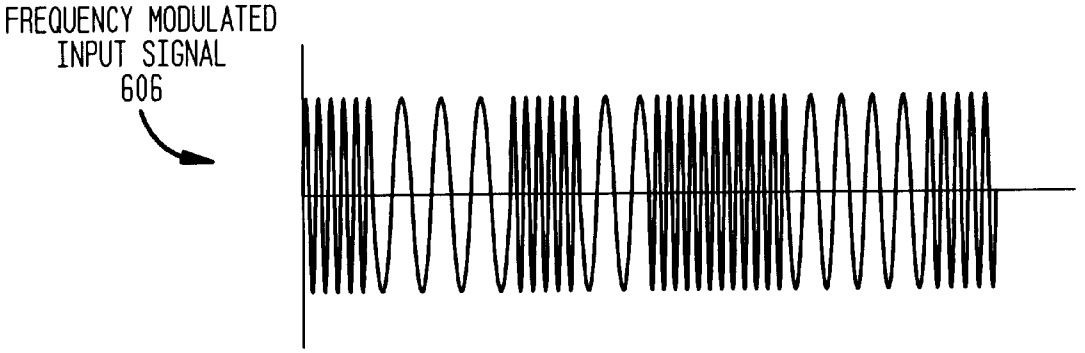

FIG. 6D

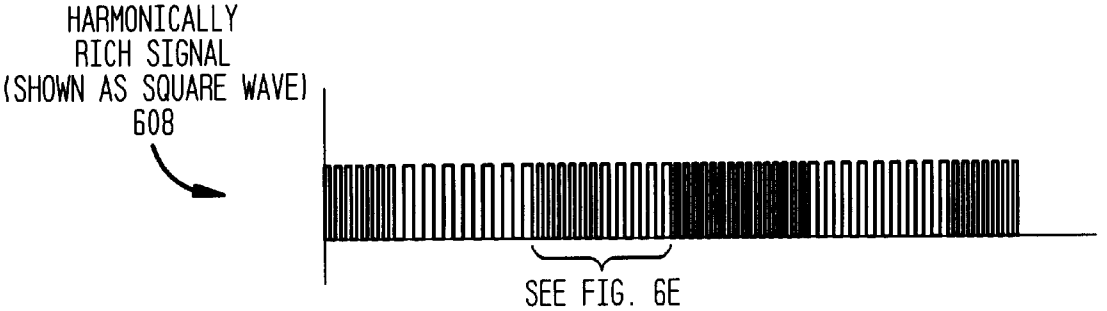

FIG. 6E

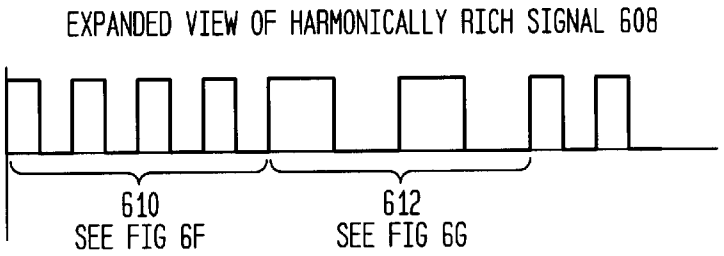

FIG. 6F

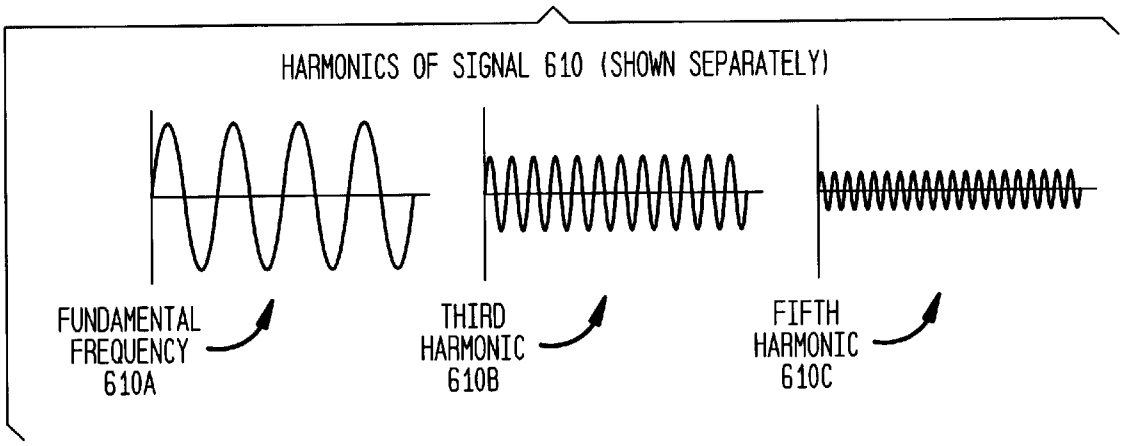

FIG. 6G

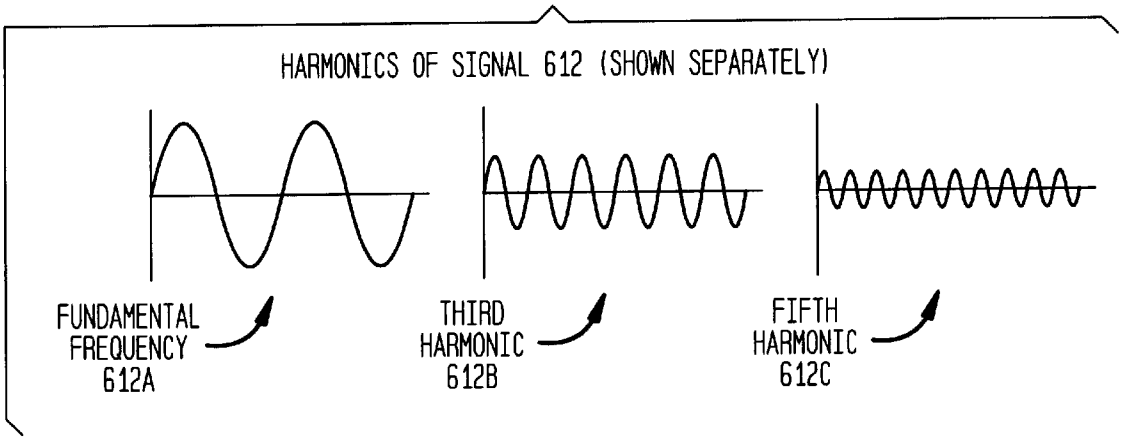

FIG. 6H

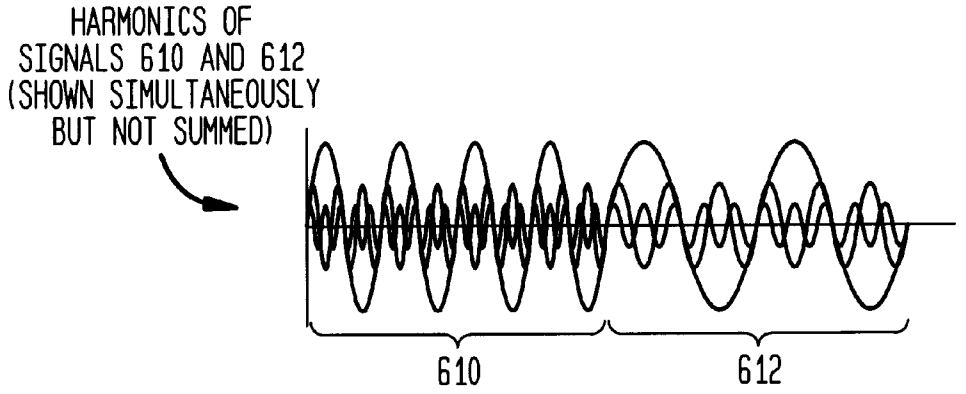
HARMONICS OF
SIGNALS 610 AND 612
(SHOWN SIMULTANEOUSLY
BUT NOT SUMMED)
610
612

FIG. 6I

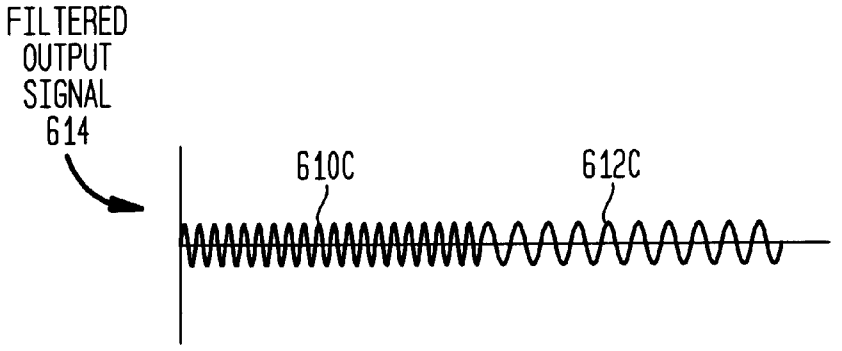
FILTERED
OUTPUT
SIGNAL
614
610C
612C

FIG. 7

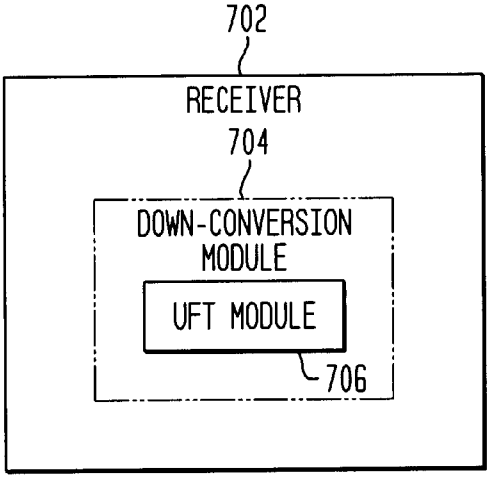

FIG. 8

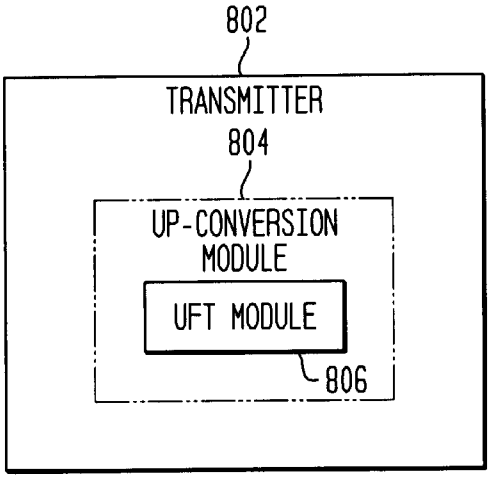

FIG. 9

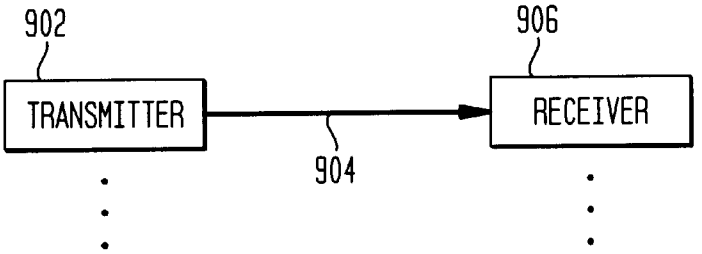

FIG. 10

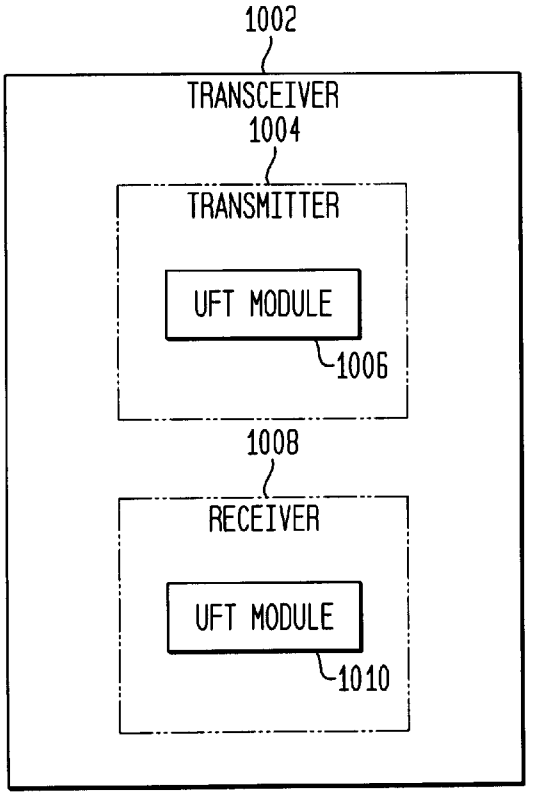
1002
TRANSCEIVER
1004
TRANSMITTER
UFT MODULE
1006
1008
RECEIVER
UFT MODULE
1010

FIG. 11

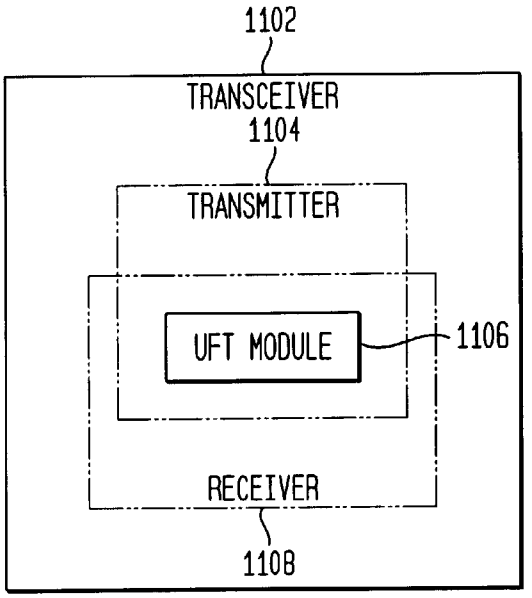
1102
TRANSCEIVER
1104
TRANSMITTER
UFT MODULE
1106
RECEIVER
1108

FIG. 12

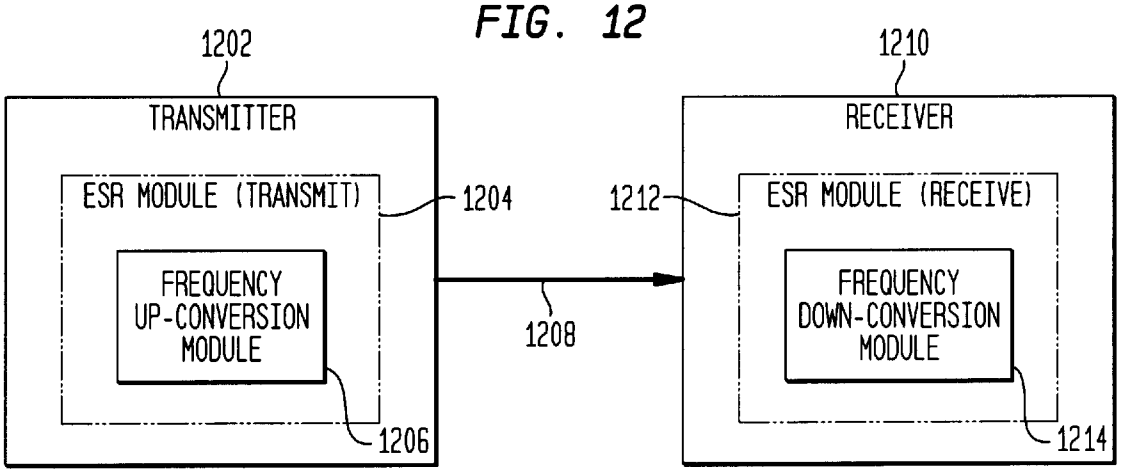

FIG. 13

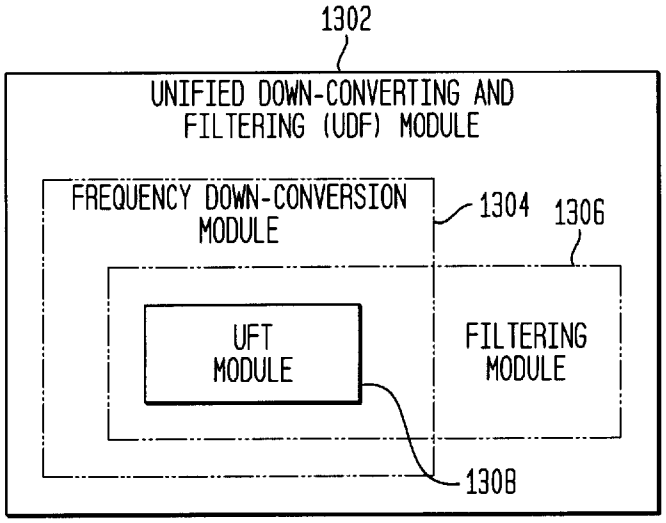

FIG. 14

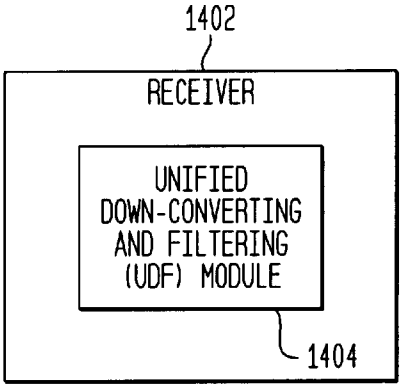

FIG. 15A

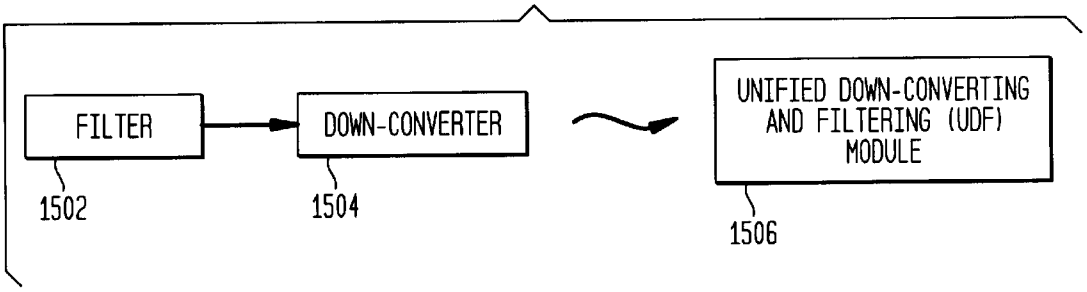

FIG. 15B

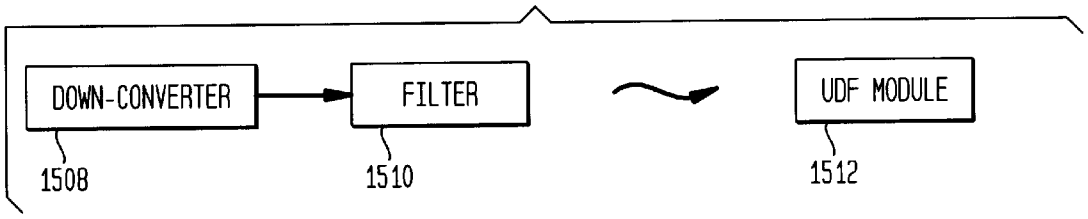

FIG. 15C

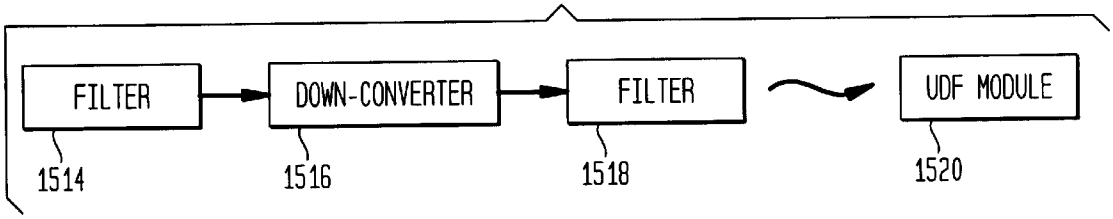

FIG. 15D

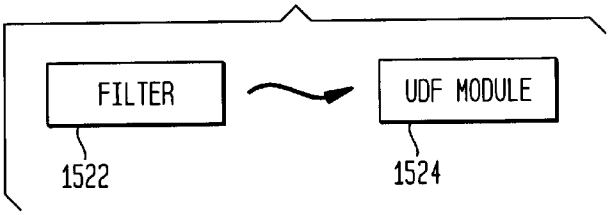

FIG. 15E

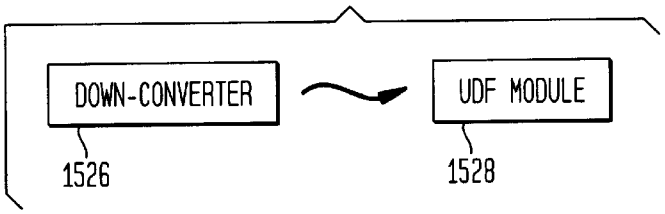

FIG. 15F

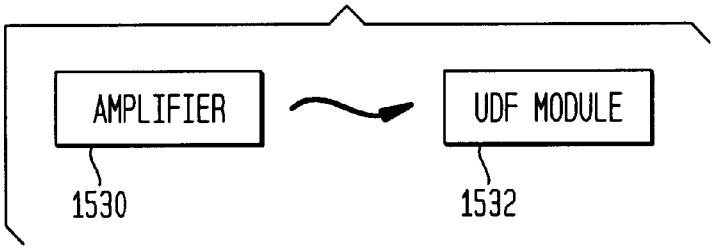

FIG. 16

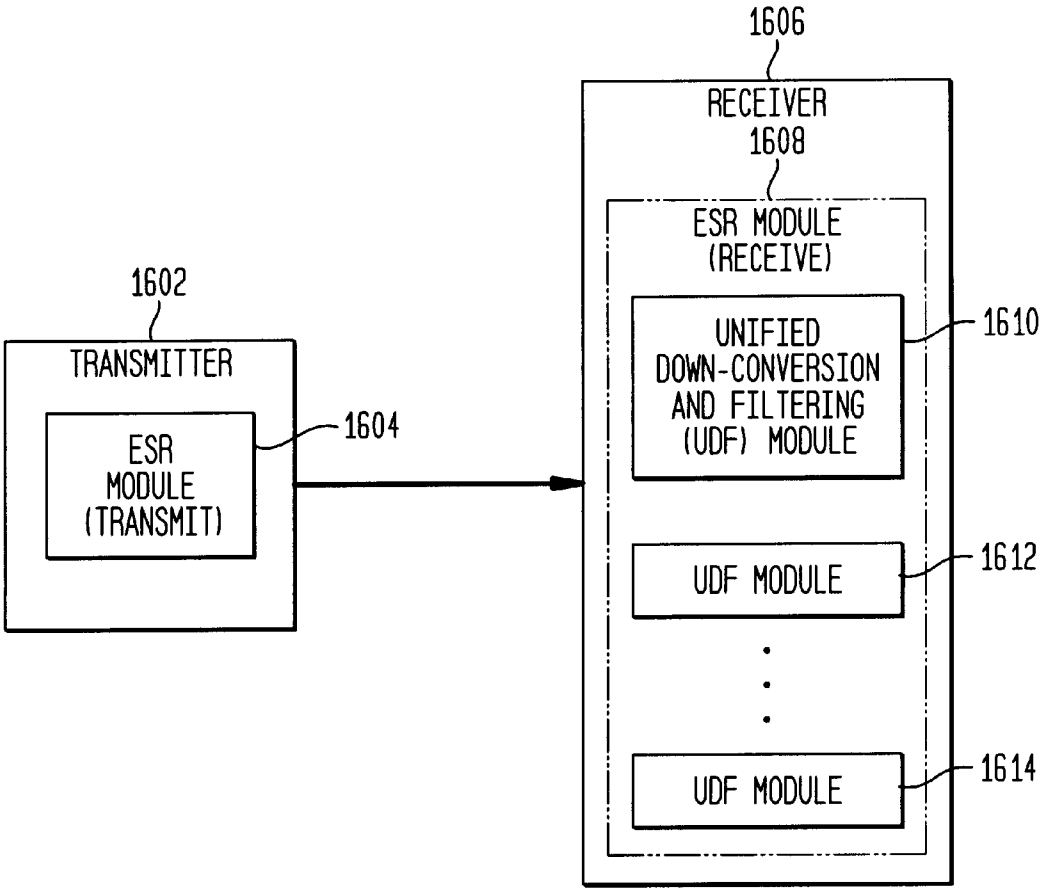

FIG. 17

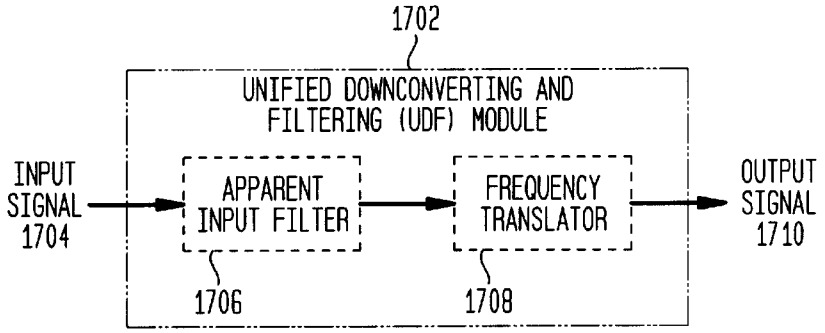

FIG. 18

1802

TIME / NODE	t-1 (RISING EDGE OF Φ_1)	t-1 (RISING EDGE OF Φ_2)	t (RISING EDGE OF Φ_1)	t (RISING EDGE OF Φ_2)	t+1 (RISING EDGE OF Φ_1)
1902	VI_{t-1} 1804	VI_{t-1} 1808	VI_t 1816	VI_t 1826	VI_{t+1} 1838
1904	—	VI_{t-1} 1810	VI_{t-1} 1818	VI_t 1828	VI_t 1840
1906	VO_{t-1} 1806	VO_{t-1} 1812	VO_t 1820	VO_t 1830	VO_{t+1} 1842
1908	—	VO_{t-1} 1814	VO_{t-1} 1822	VO_t 1832	VO_t 1844
1910	— 1807	—	VO_{t-1} 1824	VO_{t-1} 1834	VO_t 1846
1912	—	— 1815	—	VO_{t-1} 1836	VO_{t-1} 1848
1918	—	—	—	—	VI_t- 1850 $0.1 * VO_t$- $0.8 * VO_{t-1}$

FIG. 20A

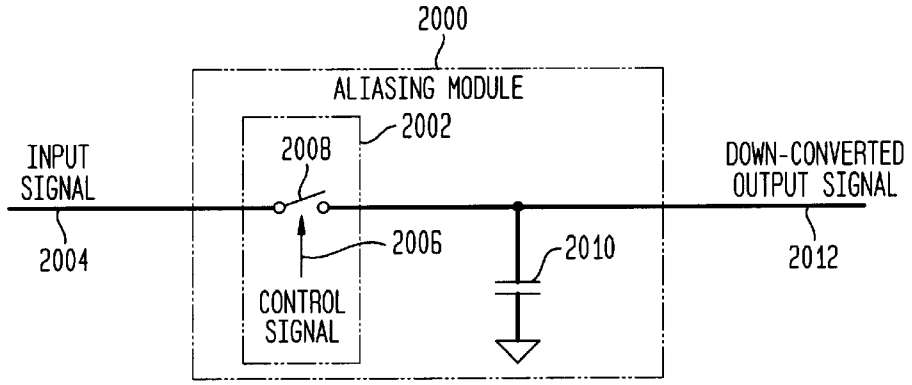

FIG. 19A

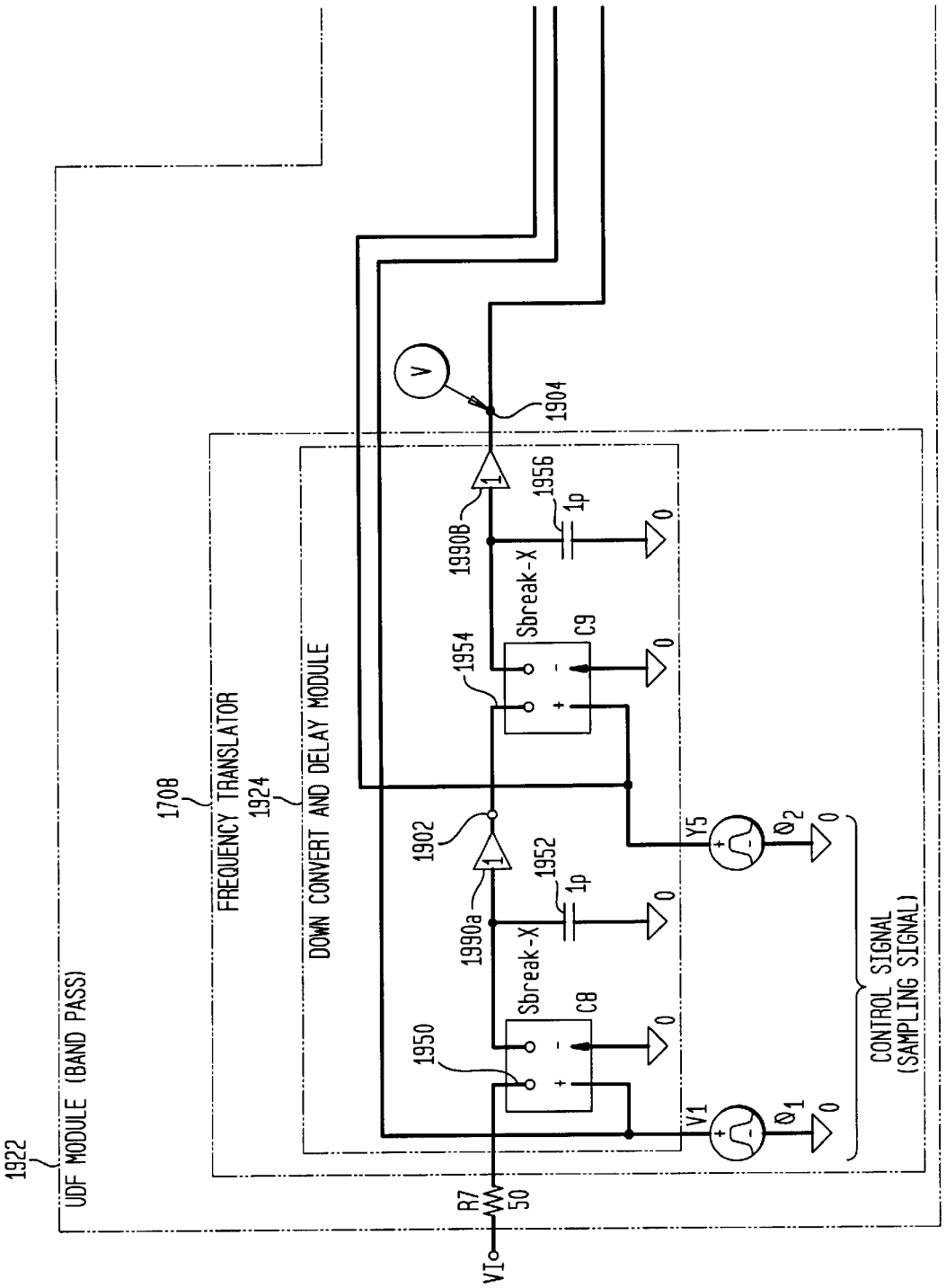
1922
UDF MODULE (BAND PASS)
170B
FREQUENCY TRANSLATOR
1924
DOWN CONVERT AND DELAY MODULE
1904
1990B
1956
1p
Sbreak-X
C9
1954
1902
1990a
1952
1p
Sbreak-X
C8
1950
Y5
V1
Ø2
Ø1
CONTROL SIGNAL
(SAMPLING SIGNAL)
R7
50
VI

FIG. 19B

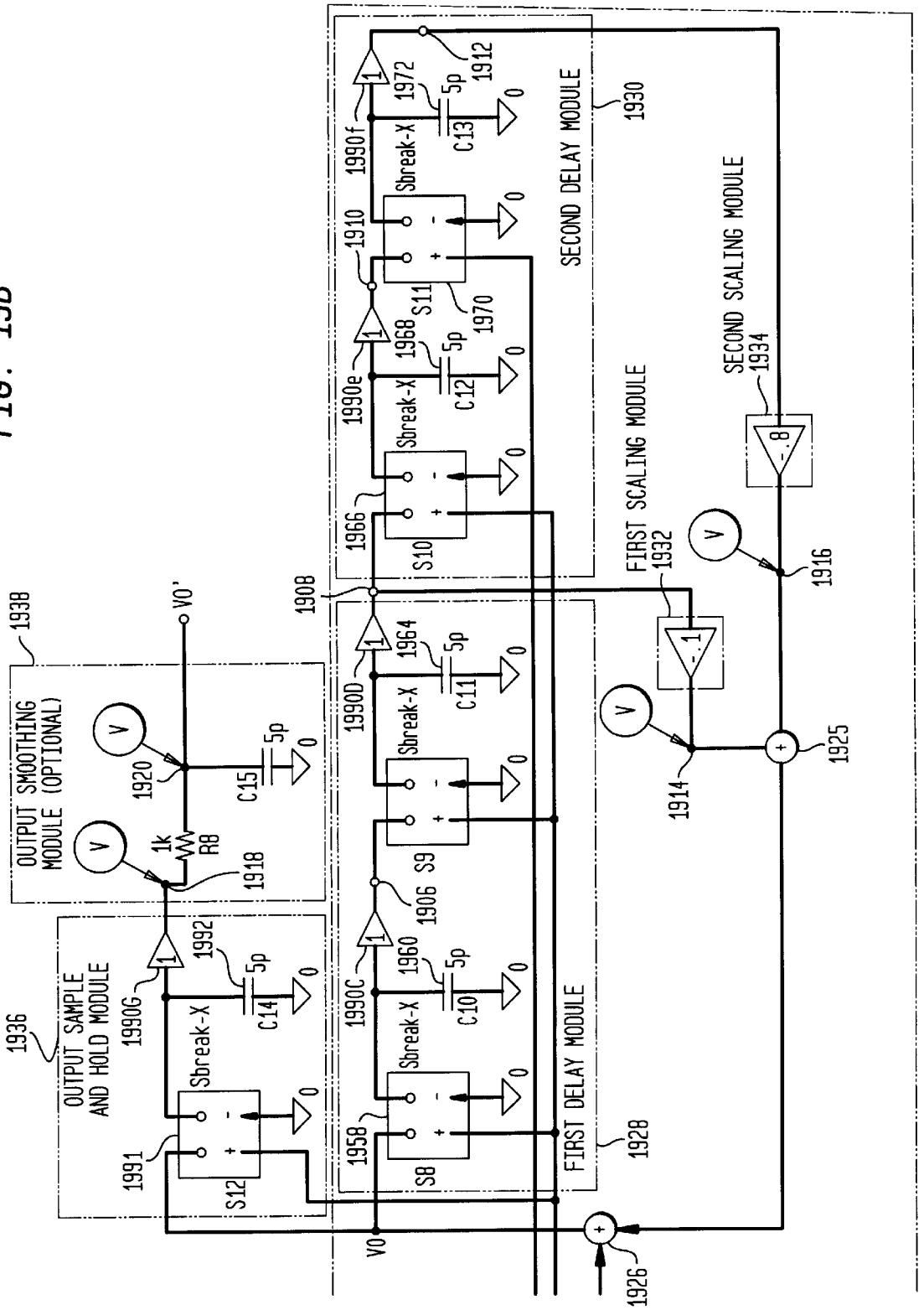
OUTPUT SMOOTHING MODULE (OPTIONAL)
1938
OUTPUT SAMPLE AND HOLD MODULE
1936
FIRST DELAY MODULE
1928
SECOND DELAY MODULE
1930
FIRST SCALING MODULE
1932
SECOND SCALING MODULE
1934
1908
1906
1910
1912
1914
1916
1918
1920
1925
1926
1928
1930
1932
1934
1936
1938
1958
1960
1964
1966
1968
1970
1972
1990C
1990D
1990e
1990f
1990G
1991
1992
S8
S9
S10
S11
S12
Sbreak-X
C10
C11
C12
C13
C14
C15
1k
R8
5p
0
V0
V0'
-.1
-.8

FIG. 20B

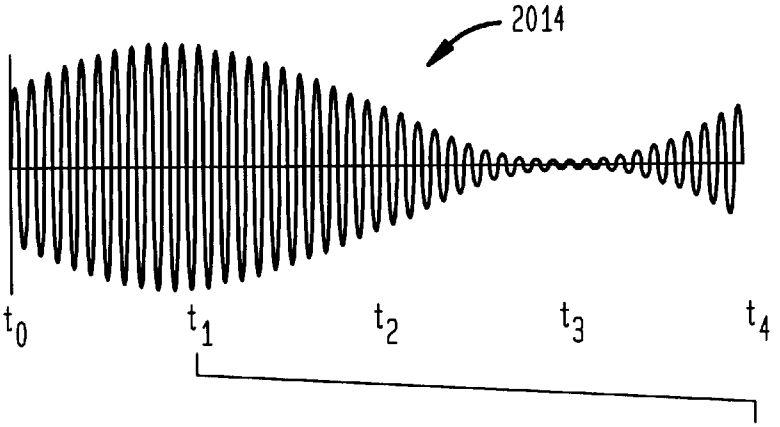

FIG. 20C

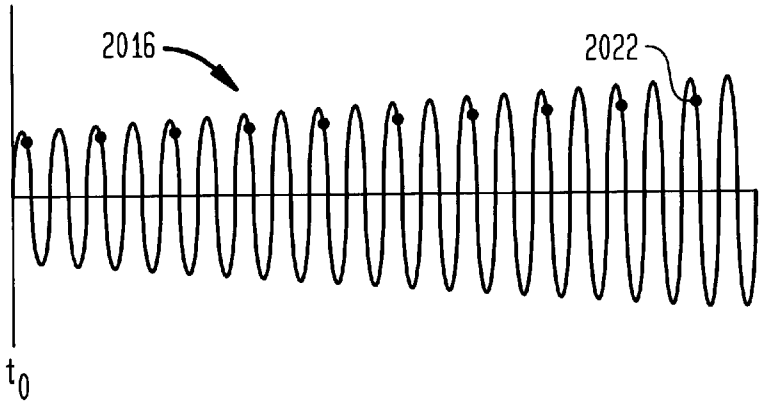

FIG. 20D

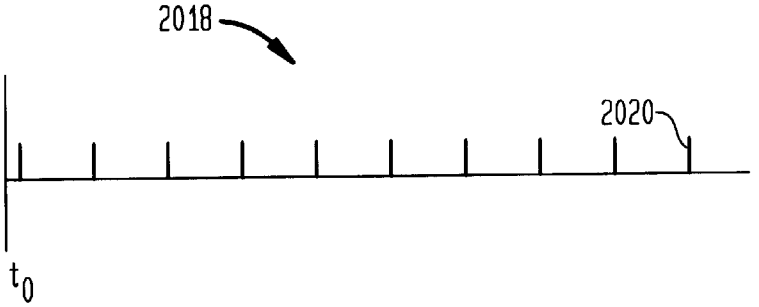

FIG. 20E

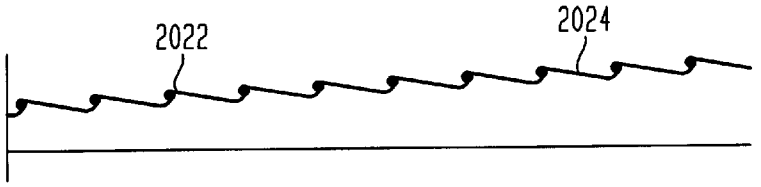

FIG. 20F

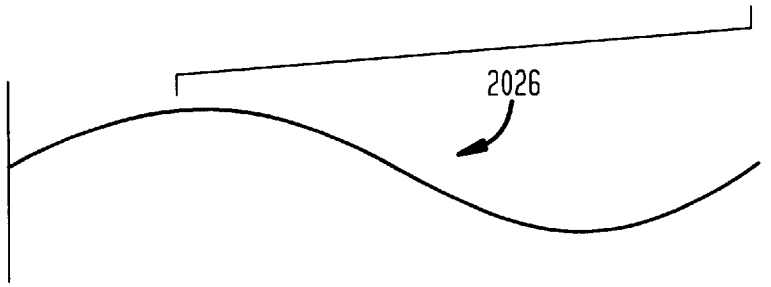

FIG. 20G

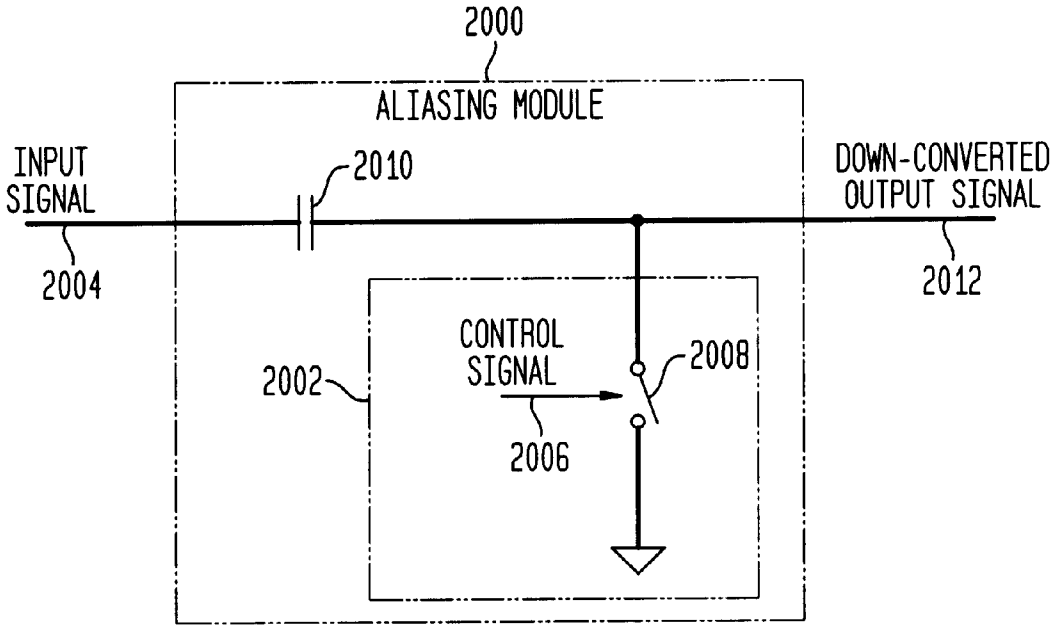
2000
ALIASING MODULE
INPUT SIGNAL
2010
DOWN-CONVERTED OUTPUT SIGNAL
2004
2012
CONTROL SIGNAL
2008
2002
2006

FIG. 21

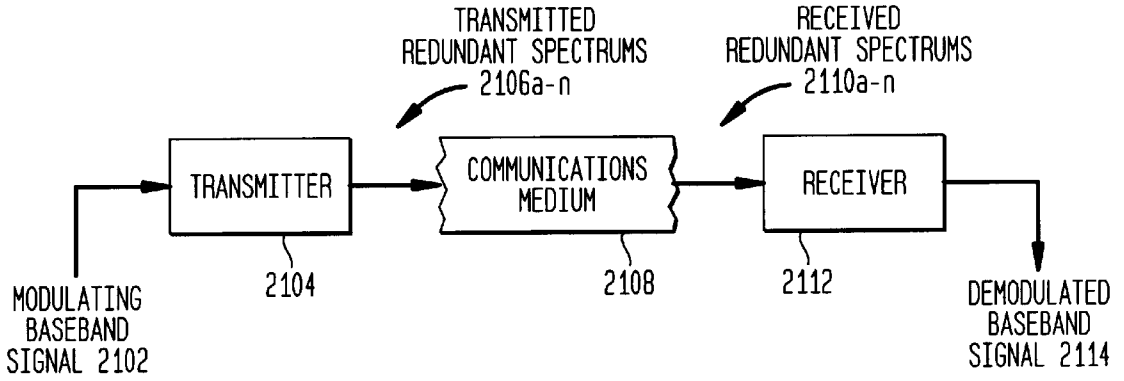
TRANSMITTED
REDUNDANT SPECTRUMS
2106a-n
RECEIVED
REDUNDANT SPECTRUMS
2110a-n
TRANSMITTER
COMMUNICATIONS
MEDIUM
RECEIVER
MODULATING
BASEBAND
SIGNAL 2102
2104
2108
2112
DEMODULATED
BASEBAND
SIGNAL 2114

FIG. 22A

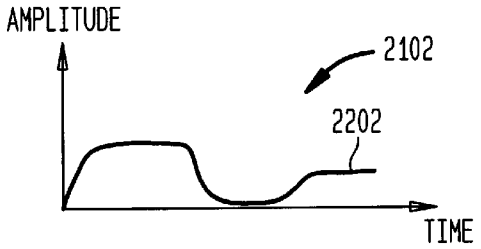

FIG. 22B

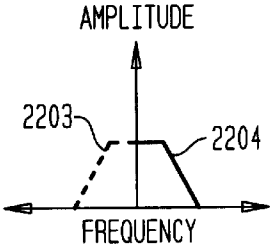

FIG. 22C

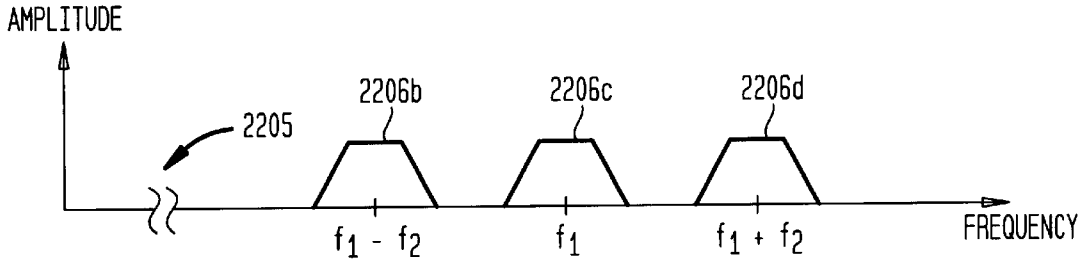

FIG. 22D

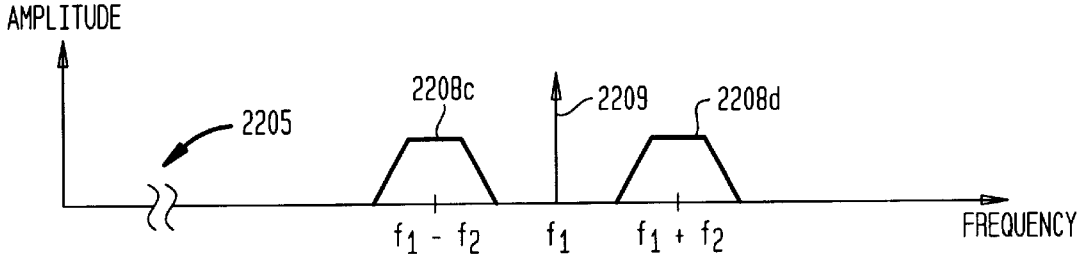

FIG. 22E

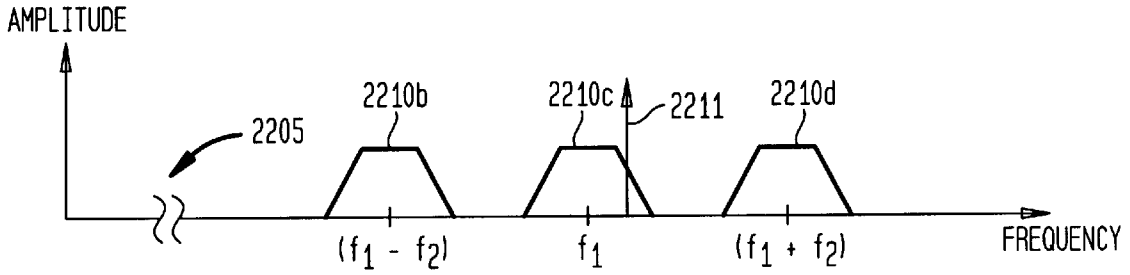

FIG. 22F

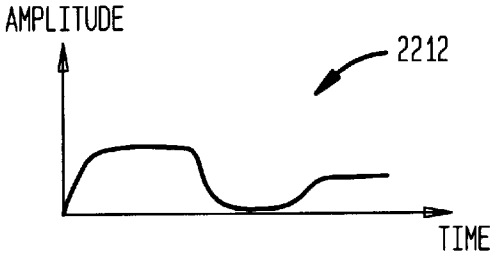

FIG. 23A

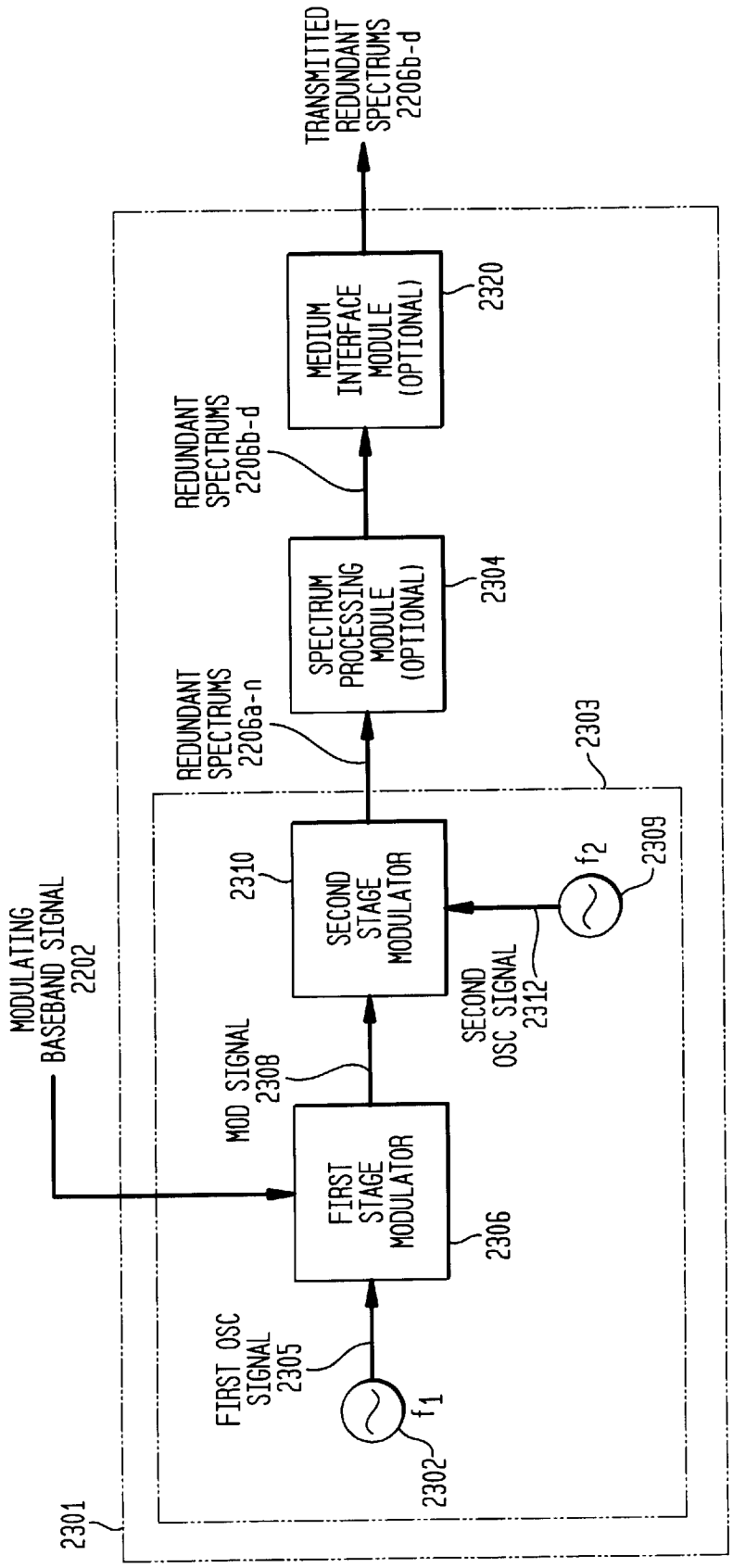
TRANSMITTED REDUNDANT SPECTRUMS 2206b-d
MEDIUM INTERFACE MODULE (OPTIONAL)
2320
REDUNDANT SPECTRUMS 2206b-d
SPECTRUM PROCESSING MODULE (OPTIONAL)
2304
REDUNDANT SPECTRUMS 2206a-n
2303
SECOND STAGE MODULATOR
2310
f2
2309
SECOND OSC SIGNAL 2312
MOD SIGNAL 2308
FIRST STAGE MODULATOR
2306
MODULATING BASEBAND SIGNAL 2202
FIRST OSC SIGNAL 2305
f1
2302
2301

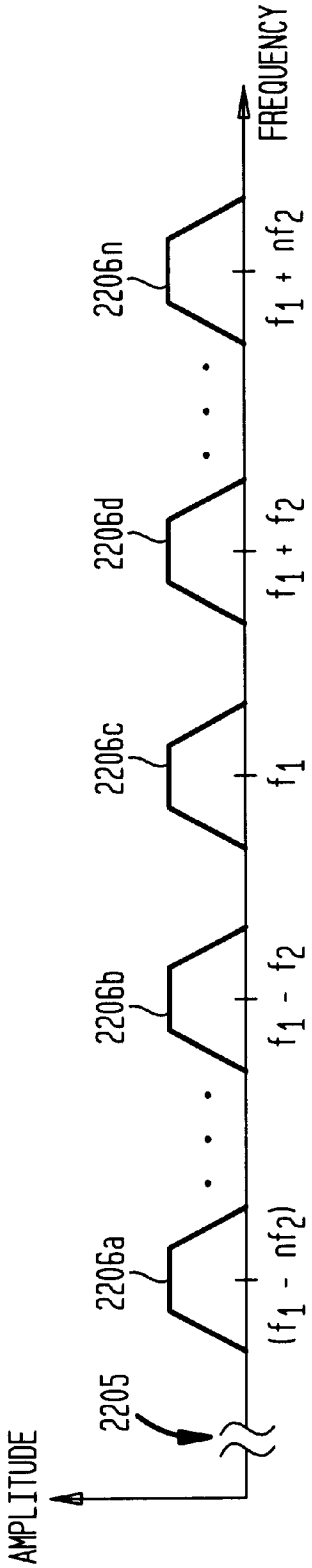

FIG. 23B

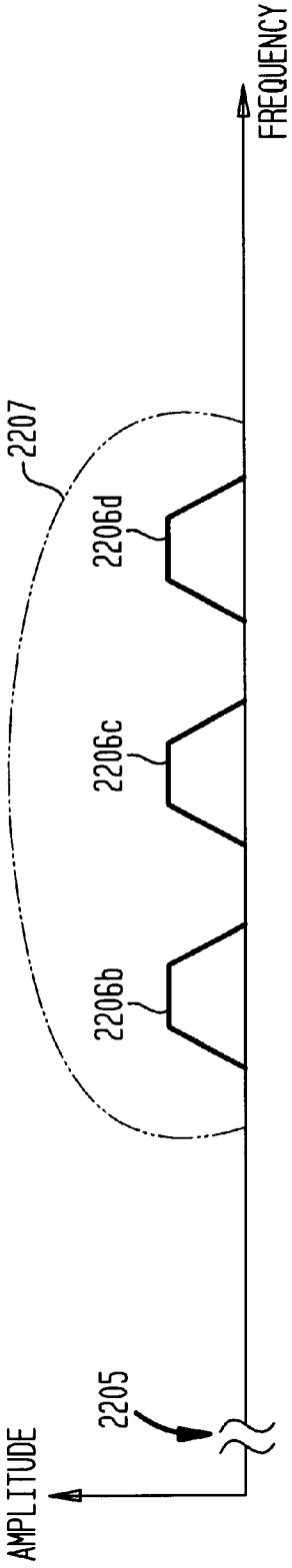

FIG. 23C

FIG. 23D

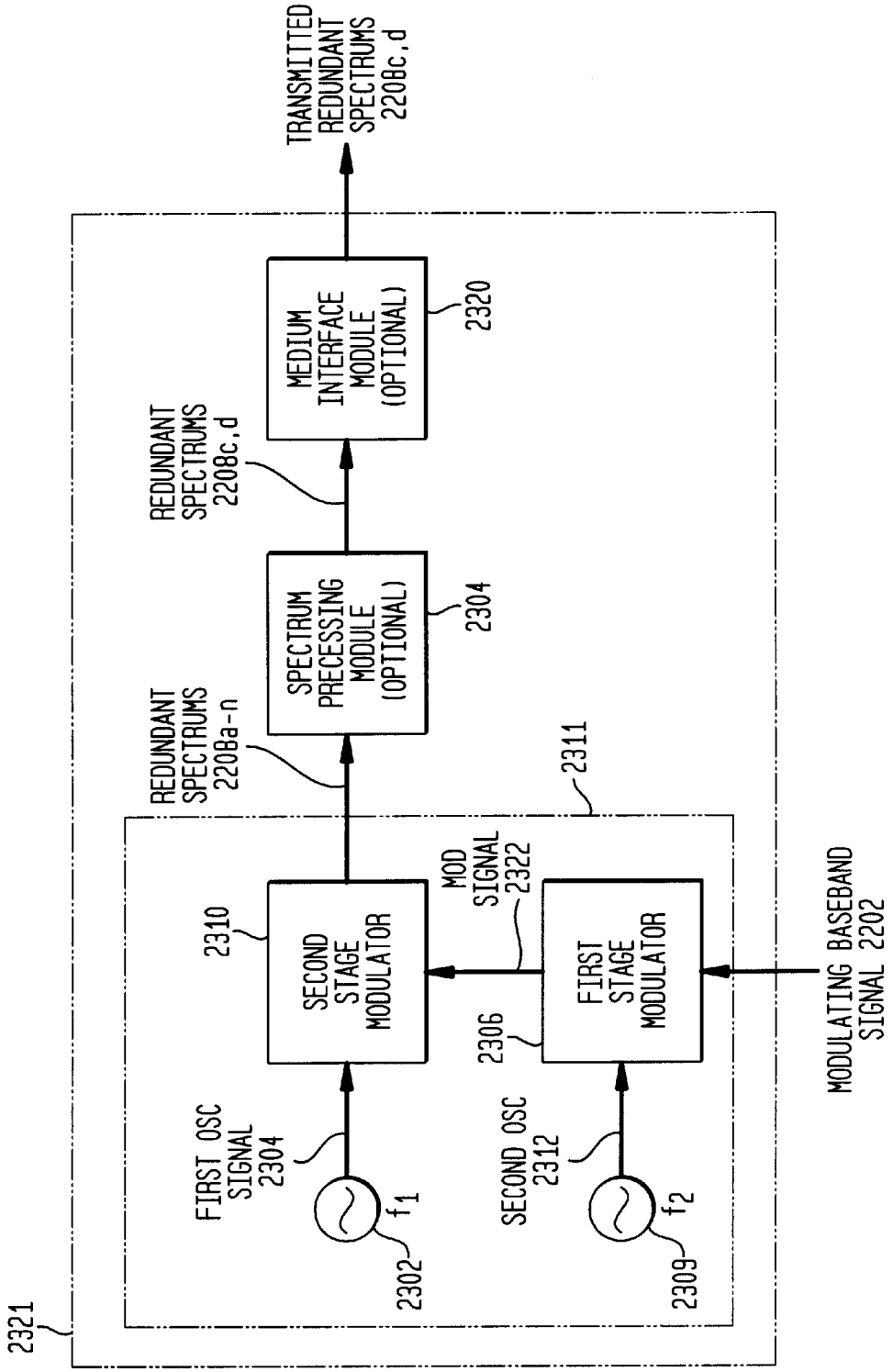
TRANSMITTED REDUNDANT SPECTRUMS 2208c,d
MEDIUM INTERFACE MODULE (OPTIONAL)
2320
REDUNDANT SPECTRUMS 2208c,d
SPECTRUM PRECESSING MODULE (OPTIONAL)
2304
REDUNDANT SPECTRUMS 2208a-n
2311
2310
SECOND STAGE MODULATOR
MOD SIGNAL 2322
FIRST STAGE MODULATOR
2306
MODULATING BASEBAND SIGNAL 2202
FIRST OSC SIGNAL 2304
f1
2302
SECOND OSC 2312
f2
2309
2321

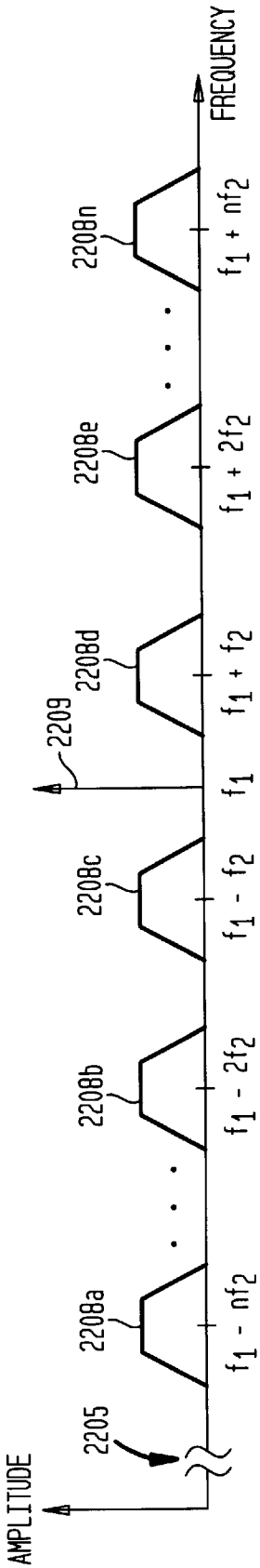

FIG. 23E

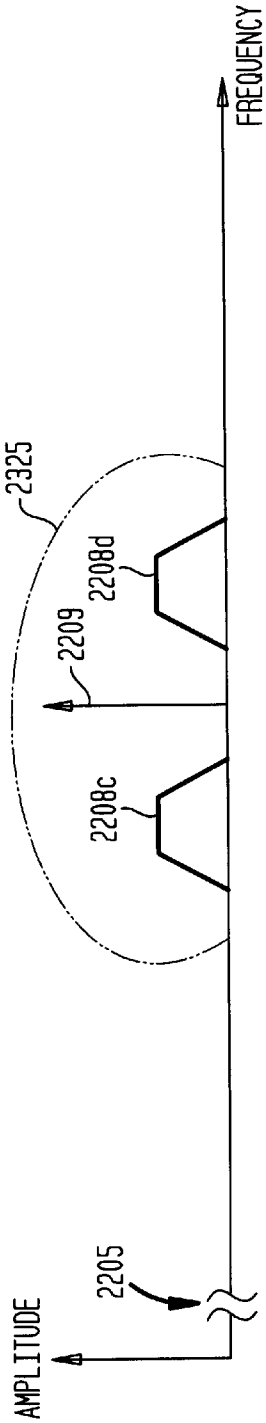

FIG. 23F

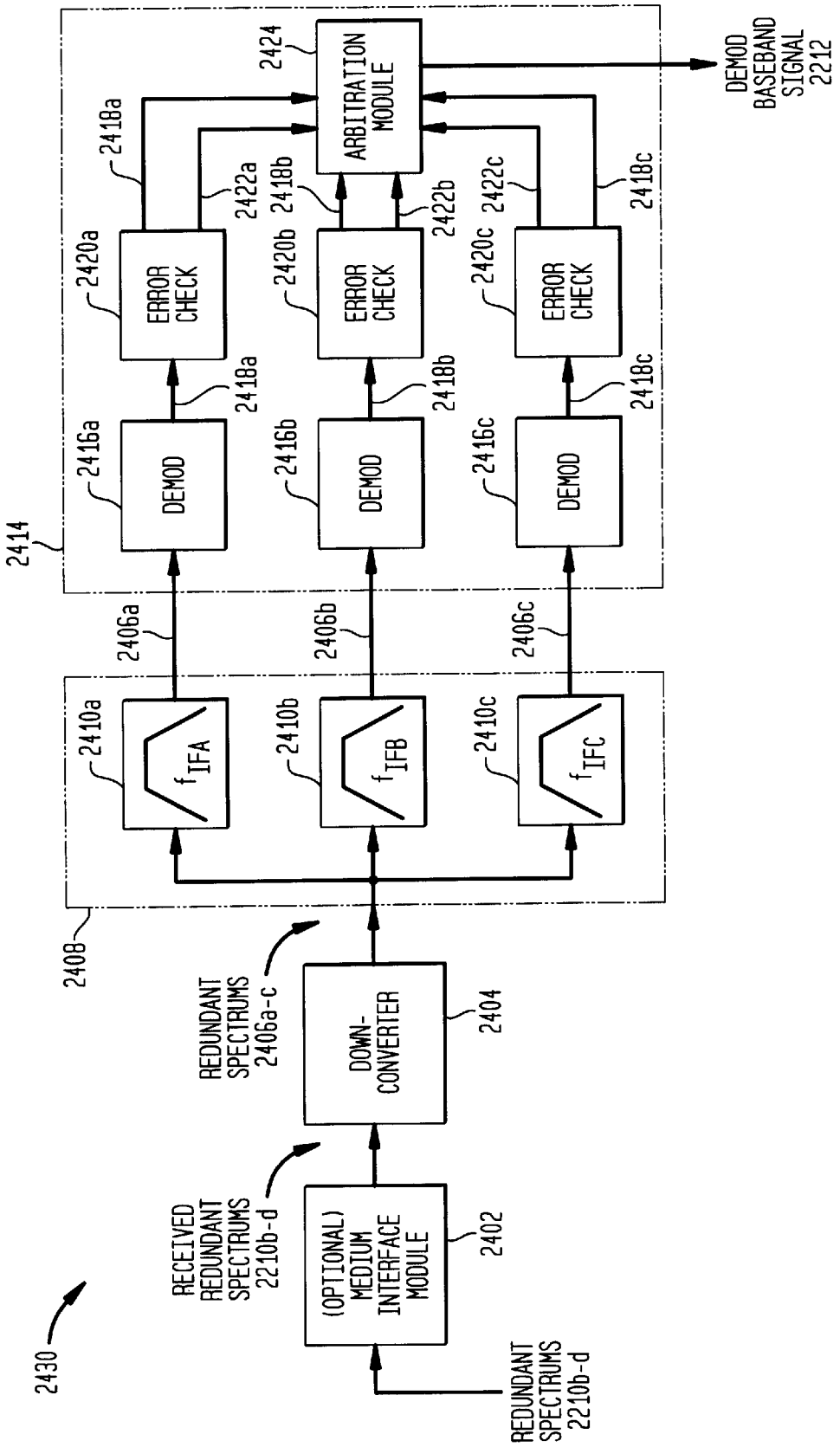
2430
RECEIVED REDUNDANT SPECTRUMS 2210b-d
(OPTIONAL) MEDIUM INTERFACE MODULE
2402
REDUNDANT SPECTRUMS 2210b-d
REDUNDANT SPECTRUMS 2406a-c
DOWN-CONVERTER
2404
2408
2410a
f_{IFA}
2410b
f_{IFB}
2410c
f_{IFC}
2406a
2406b
2406c
2414
2416a
DEMOD
2416b
DEMOD
2416c
DEMOD
2418a
2418b
2418c
2420a
ERROR CHECK
2420b
ERROR CHECK
2420c
ERROR CHECK
2422a
2422b
2422c
2424
ARBITRATION MODULE
DEMOD BASEBAND SIGNAL 2212

FIG. 24A

FIG. 24B

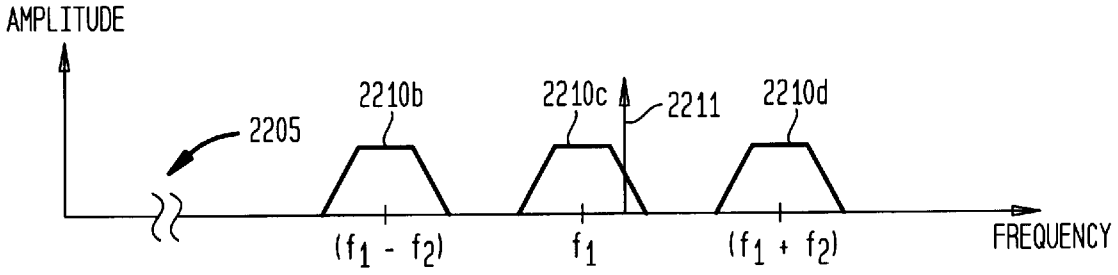

FIG. 24C

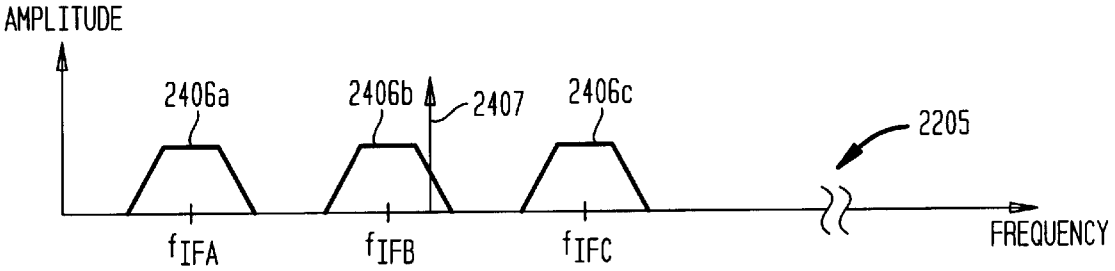

FIG. 24D

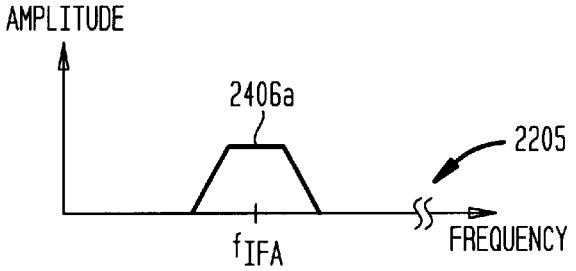

FIG. 24E

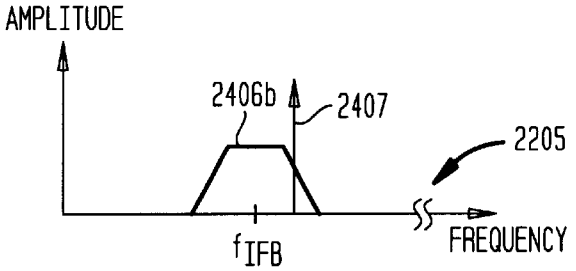

FIG. 24F

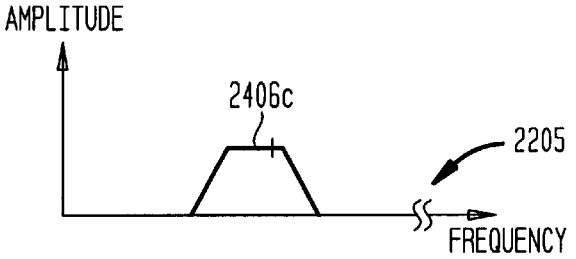

FIG. 24G

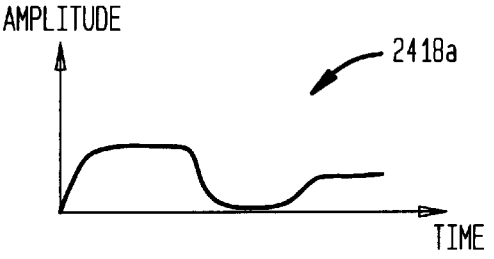

FIG. 24H

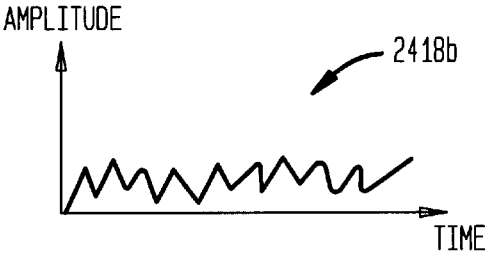

FIG. 24I

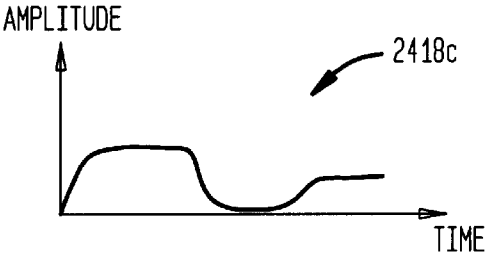

FIG. 24J

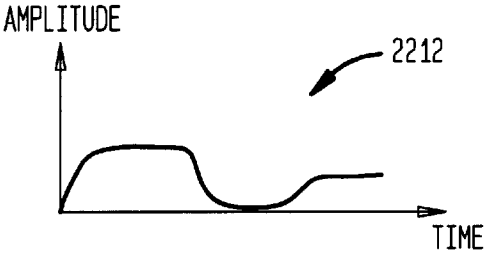

FIG. 25

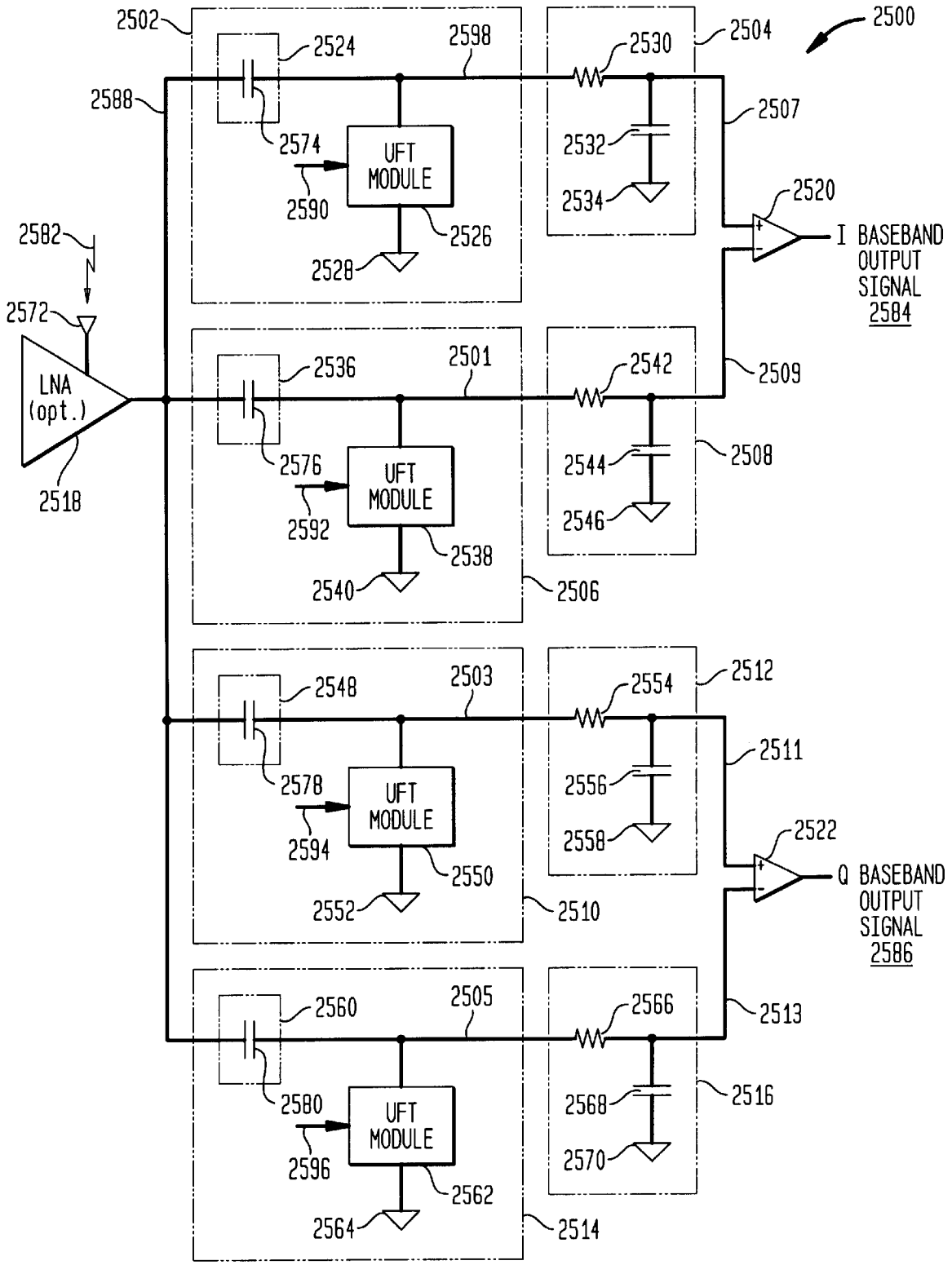
2500
2502
2524
2598
2530
2504
2588
2507
2574
UFT MODULE
2532
2534
2590
2526
2520
2582
2528
I BASEBAND OUTPUT SIGNAL 2584
2572
2536
2501
2542
2509
LNA (opt.)
2576
UFT MODULE
2544
2508
2518
2592
2538
2546
2540
2506
2548
2503
2554
2512
2578
UFT MODULE
2556
2511
2594
2550
2558
2522
2552
2510
Q BASEBAND OUTPUT SIGNAL 2586
2560
2505
2566
2513
2580
UFT MODULE
2568
2516
2596
2562
2570
2564
2514

FIG. 26

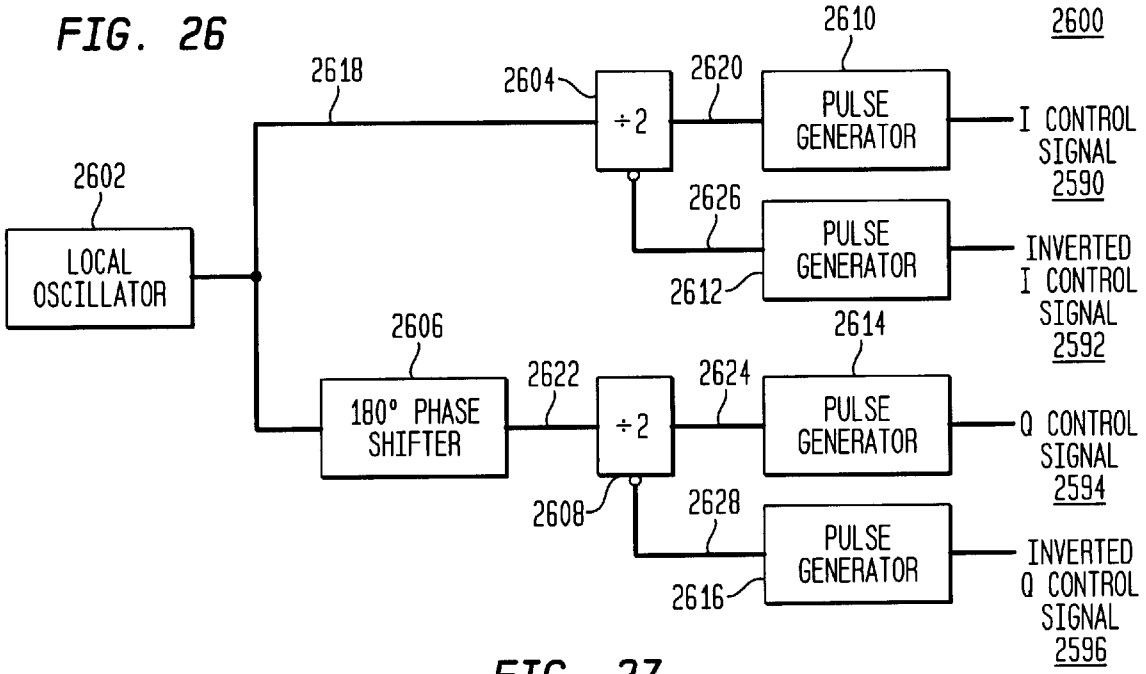
2600
2610
2618
2604
÷2
2620
PULSE GENERATOR
I CONTROL SIGNAL 2590
2602
LOCAL OSCILLATOR
2626
PULSE GENERATOR
2612
INVERTED I CONTROL SIGNAL 2592
2606
2614
180° PHASE SHIFTER
2622
÷2
2624
PULSE GENERATOR
Q CONTROL SIGNAL 2594
2608
2628
PULSE GENERATOR
2616
INVERTED Q CONTROL SIGNAL 2596

FIG. 27

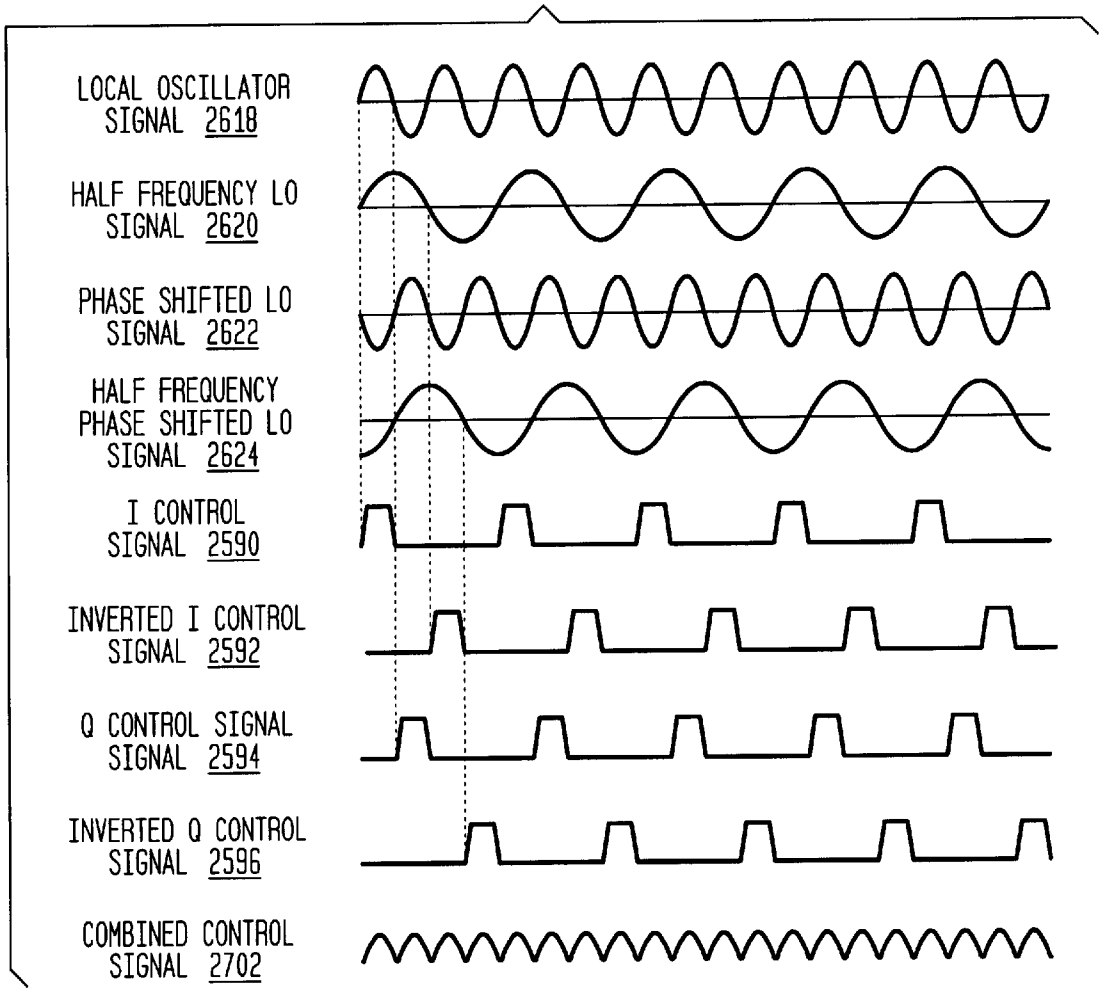
LOCAL OSCILLATOR SIGNAL 2618
HALF FREQUENCY LO SIGNAL 2620
PHASE SHIFTED LO SIGNAL 2622
HALF FREQUENCY PHASE SHIFTED LO SIGNAL 2624
I CONTROL SIGNAL 2590
INVERTED I CONTROL SIGNAL 2592
Q CONTROL SIGNAL SIGNAL 2594
INVERTED Q CONTROL SIGNAL 2596
COMBINED CONTROL SIGNAL 2702

FIG. 28

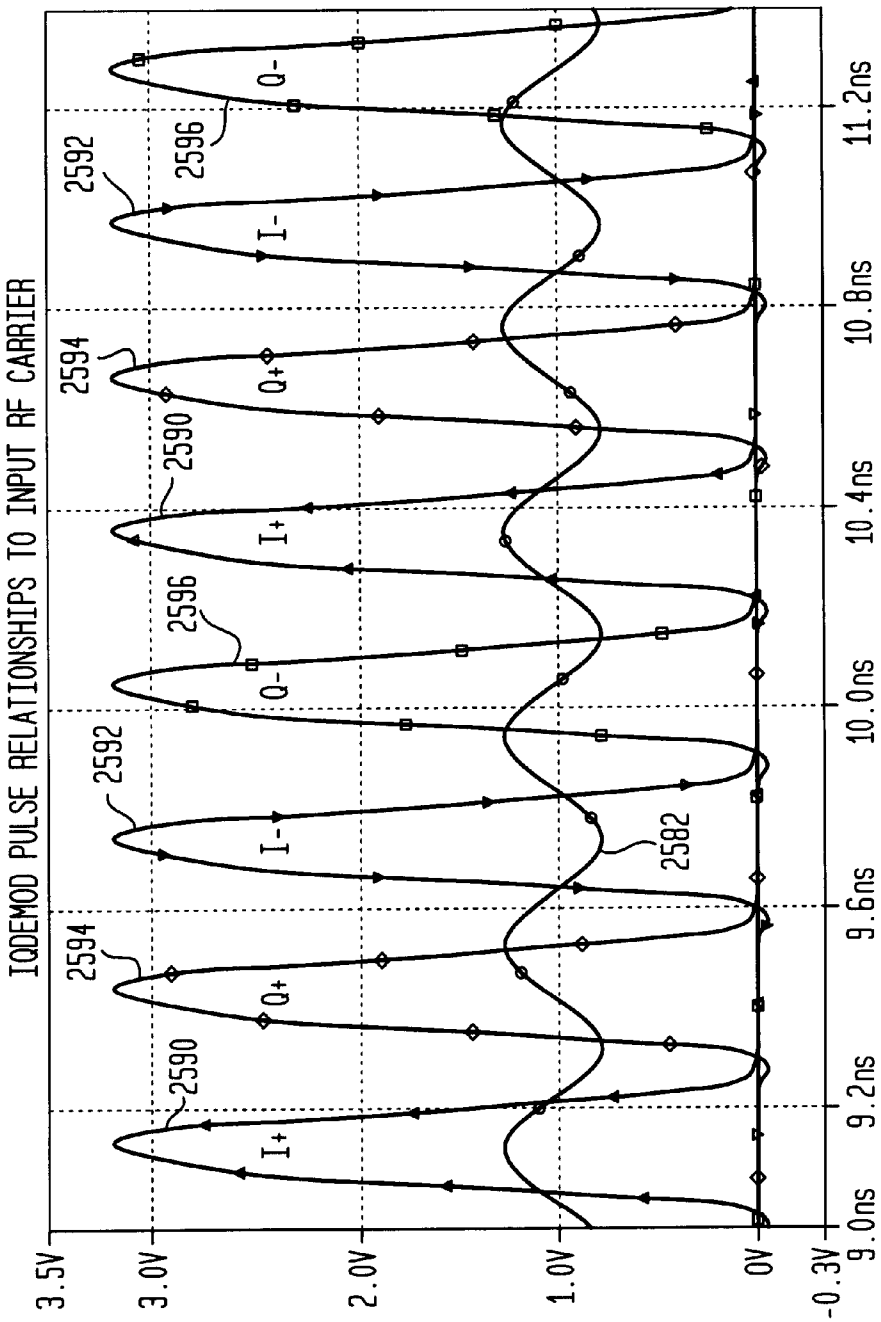
IQDEMOD PULSE RELATIONSHIPS TO INPUT RF CARRIER
3.5V
3.0V
2.0V
1.0V
0V
-0.3V
9.0ns
9.2ns
9.6ns
10.0ns
10.4ns
10.8ns
11.2ns
I+
Q+
I-
Q-
2590
2594
2592
2596
2582

FIG. 29

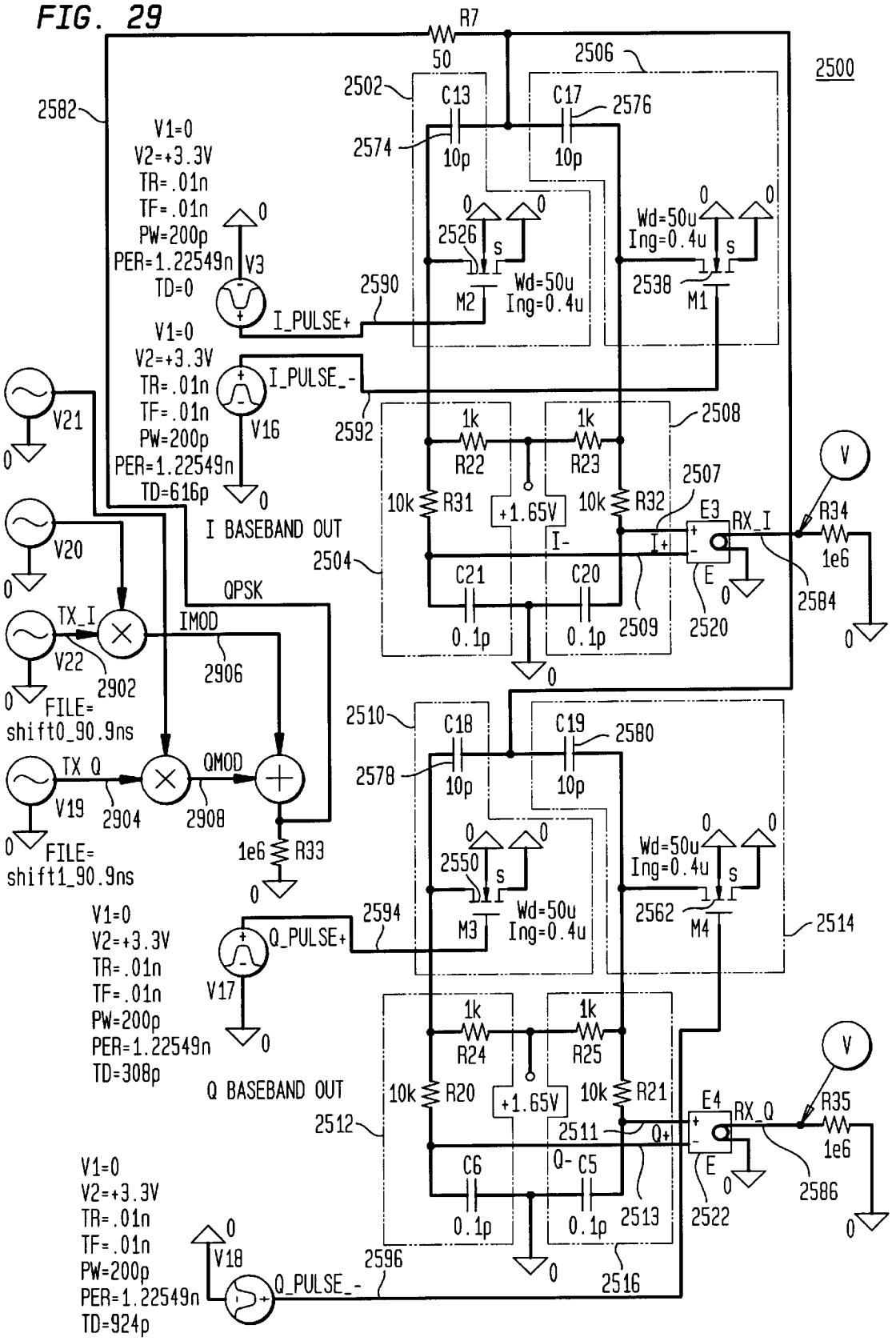
R7
50
2500
2506
2502
C13
C17
2576
2582
2574
10p
10p
V1=0
V2=+3.3V
TR=.01n
TF=.01n
PW=200p
PER=1.22549n
TD=0
V3
2526
Wd=50u
Ing=0.4u
2538
M1
M2
2590
I_PULSE+
V1=0
V2=+3.3V
TR=.01n
TF=.01n
PW=200p
PER=1.22549n
TD=616p
I_PULSE_-
V16
2592
V21
V20
1k
R22
R23
2508
10k
R31
+1.65V
10k
R32
2507
E3
RX_I
R34
1e6
I BASEBAND OUT
2504
I-
I+
C21
C20
0.1p
0.1p
2509
2520
2584
QPSK
TX_I
IMOD
V22
2902
2906
FILE=
shift0_90.9ns
2510
C18
C19
2580
2578
TX Q
QMOD
V19
2904
2908
FILE=
shift1_90.9ns
1e6
R33
2550
2562
M3
M4
2514
V1=0
V2=+3.3V
TR=.01n
TF=.01n
PW=200p
PER=1.22549n
TD=308p
Q_PULSE+
2594
V17
R24
R25
R20
R21
E4
RX_Q
R35
Q BASEBAND OUT
2512
2511
Q+
Q-
C6
C5
2513
2522
2586
V1=0
V2=+3.3V
TR=.01n
TF=.01n
PW=200p
PER=1.22549n
TD=924p
V18
Q_PULSE_-
2596
2516

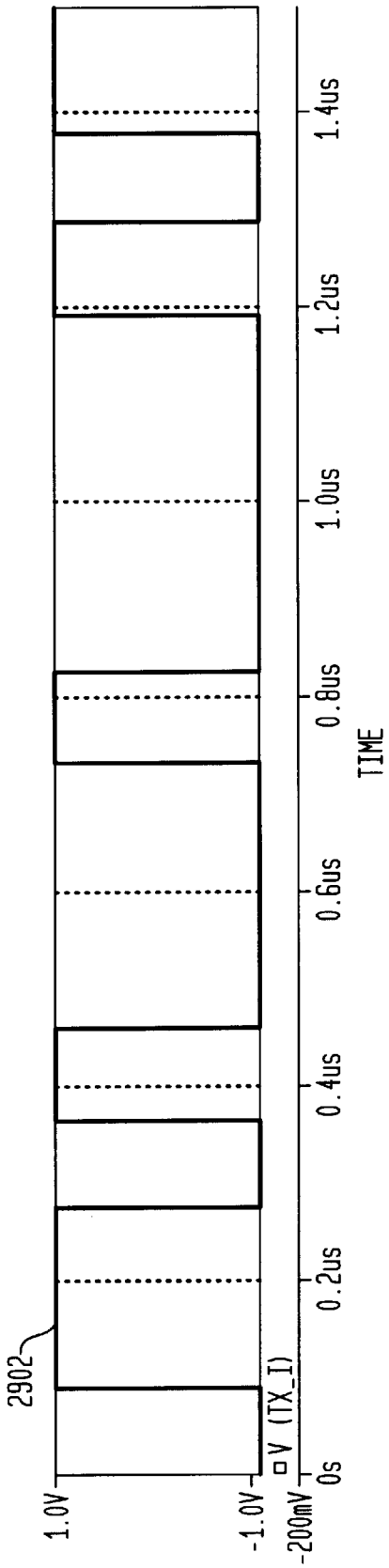

FIG. 30
IQDEMOD SHOWING TIME RELATIONSHIP OF TX_I DATA

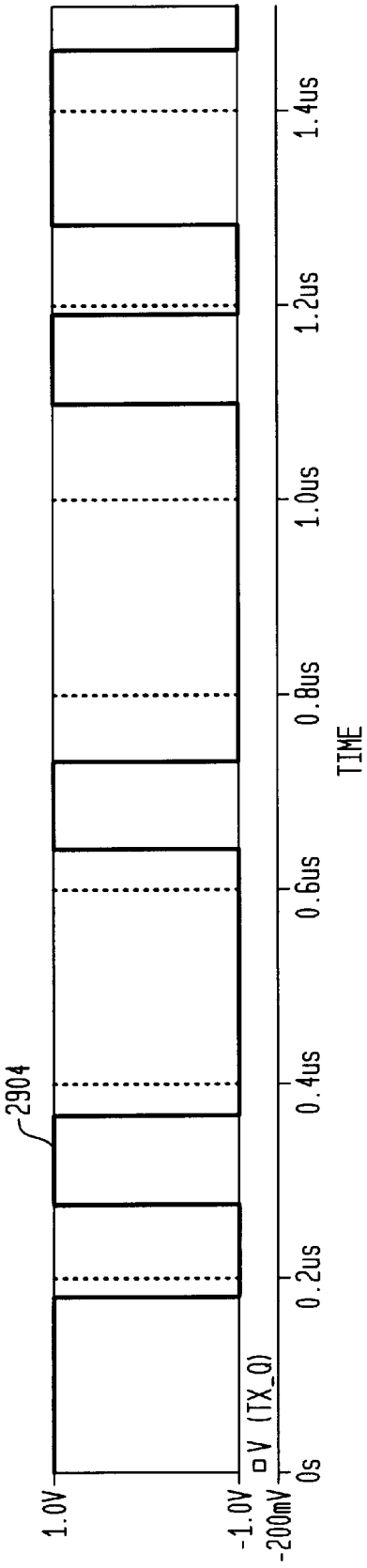

FIG. 31
IQDEMOD SHOWING TIME RELATIONSHIP OF TX_Q DATA

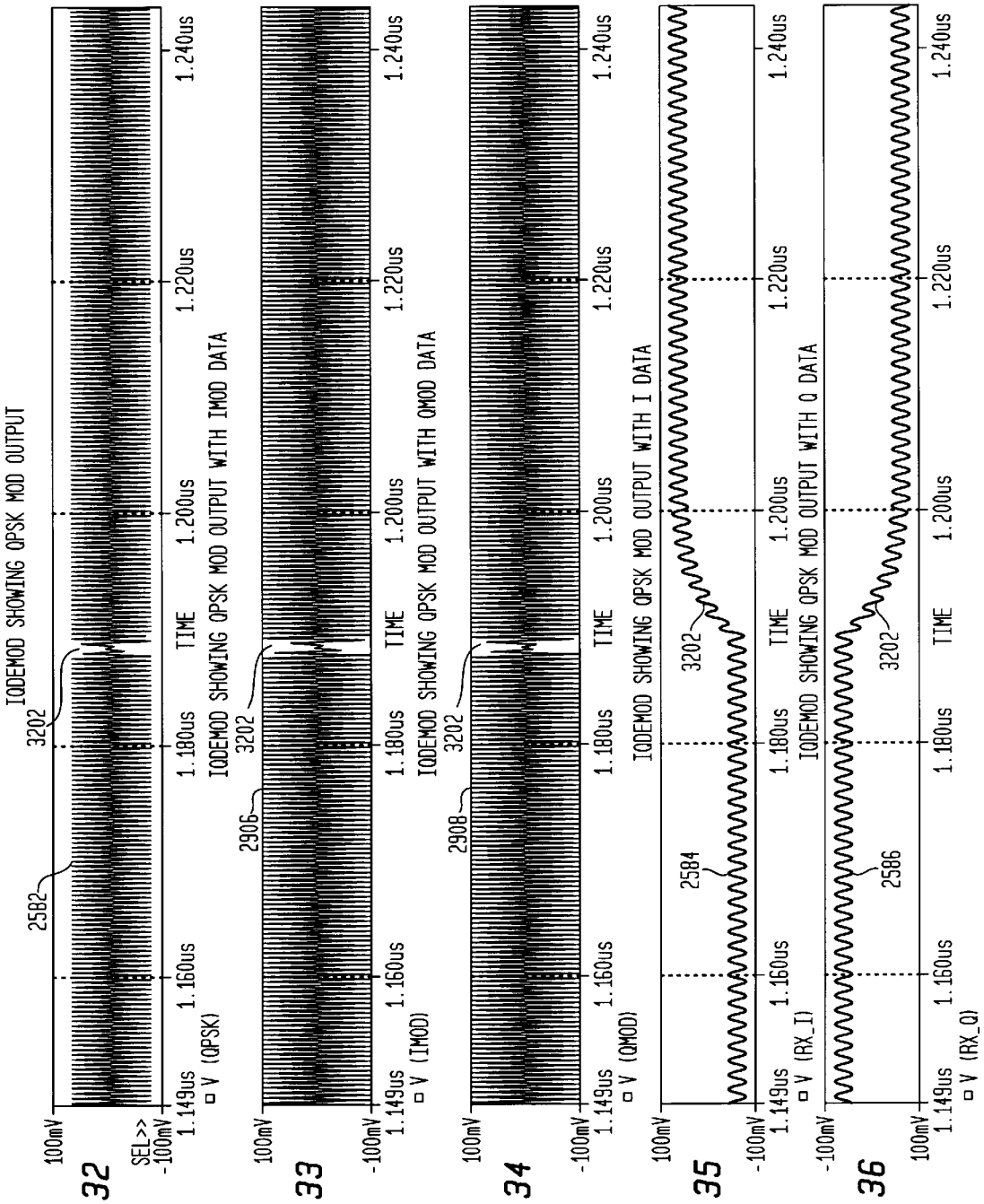

FIG. 32

FIG. 33

FIG. 34

FIG. 35

FIG. 36

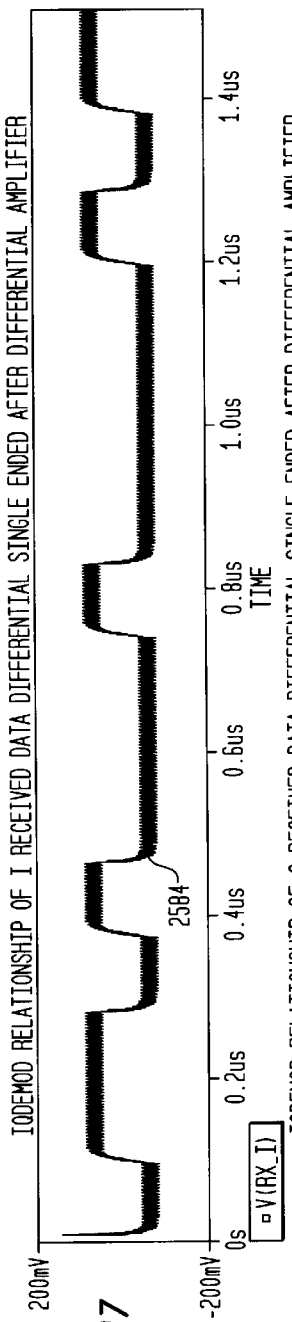

FIG. 37

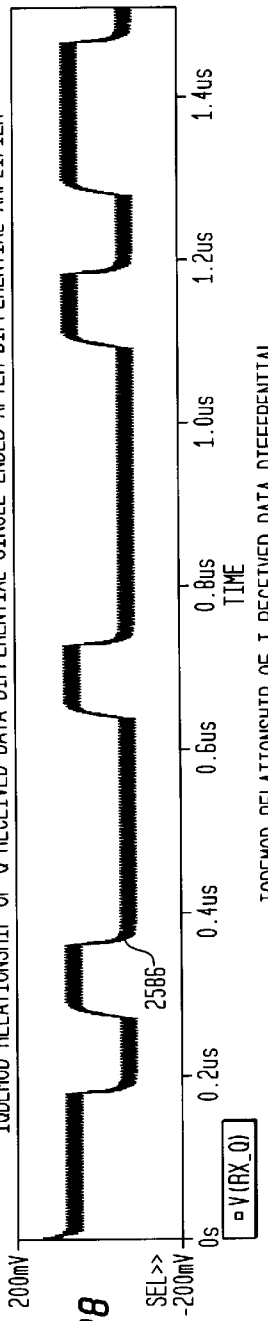

FIG. 38

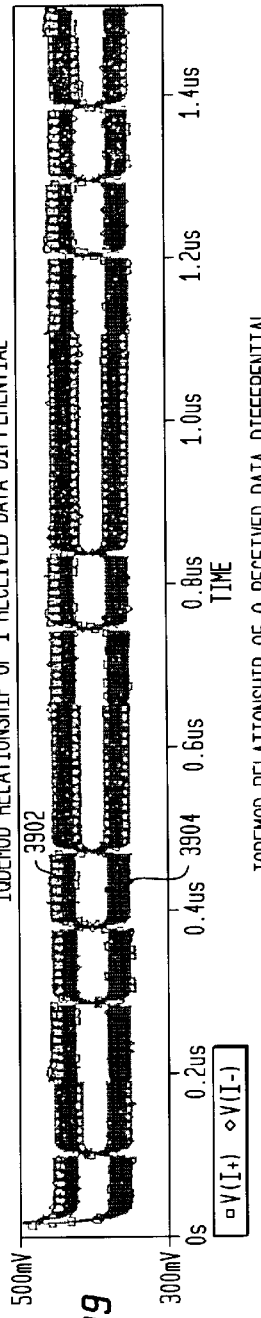

FIG. 39

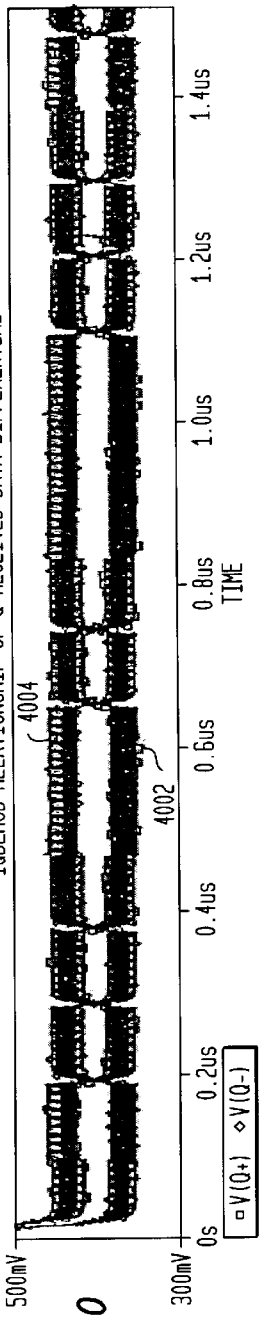

FIG. 40

FIG. 41

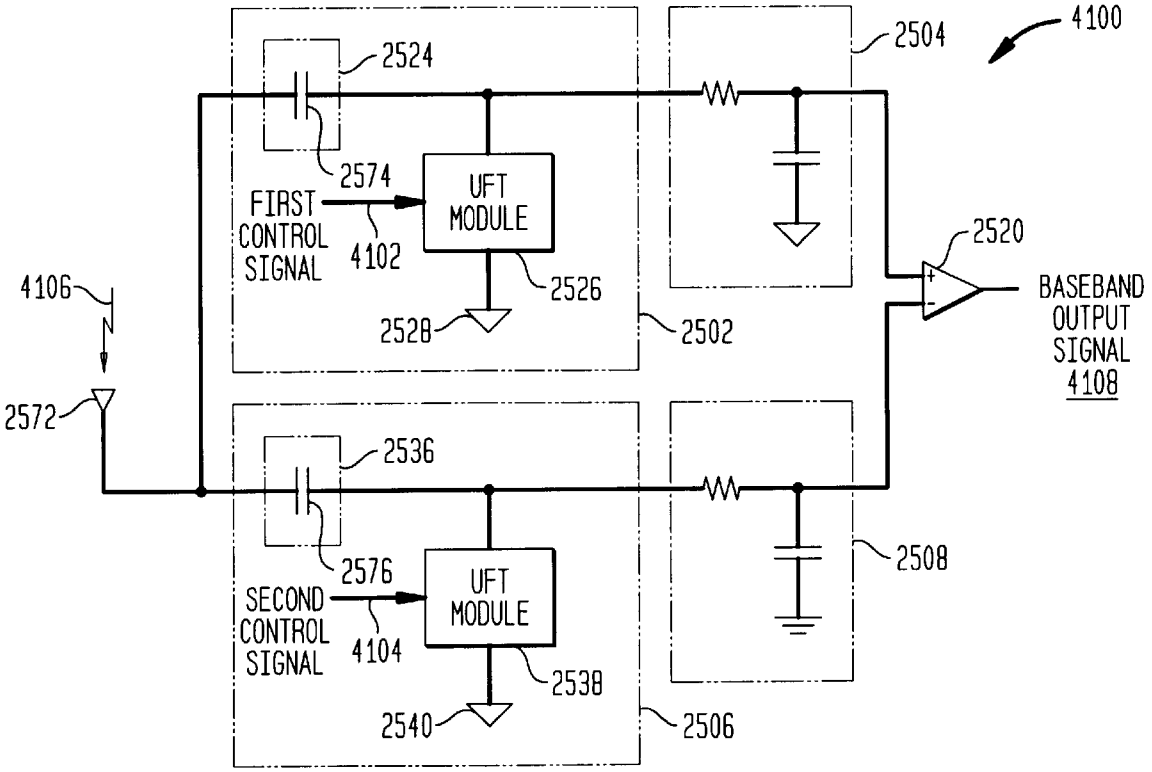
4100
2504
2524
2574
FIRST CONTROL SIGNAL
4102
UFT MODULE
2526
2528
2502
2520
BASEBAND OUTPUT SIGNAL 4108
4106
2572
2536
2576
SECOND CONTROL SIGNAL
4104
UFT MODULE
2538
2540
2506
2508

FIG. 42

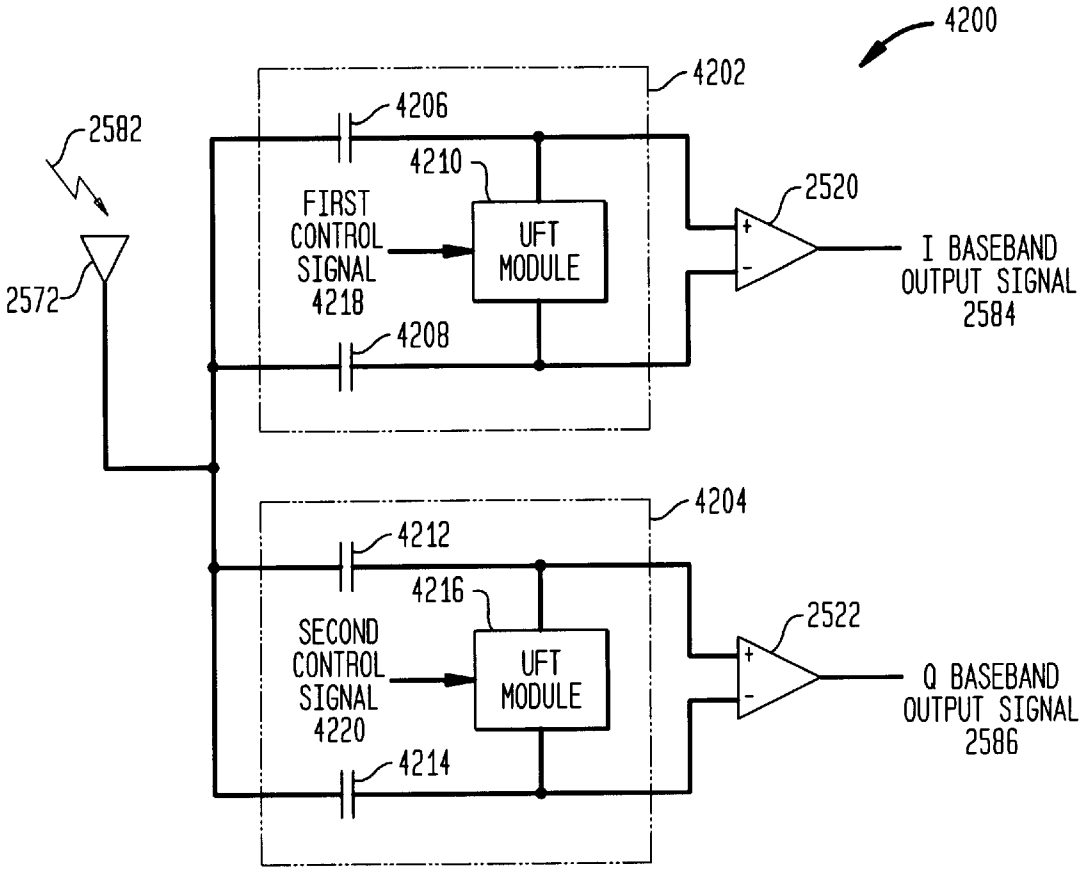
4200
4202
4206
2582
4210
FIRST
CONTROL
SIGNAL
4218
UFT
MODULE
2520
I BASEBAND
OUTPUT SIGNAL
2584
2572
4208
4204
4212
4216
SECOND
CONTROL
SIGNAL
4220
UFT
MODULE
2522
Q BASEBAND
OUTPUT SIGNAL
2586
4214

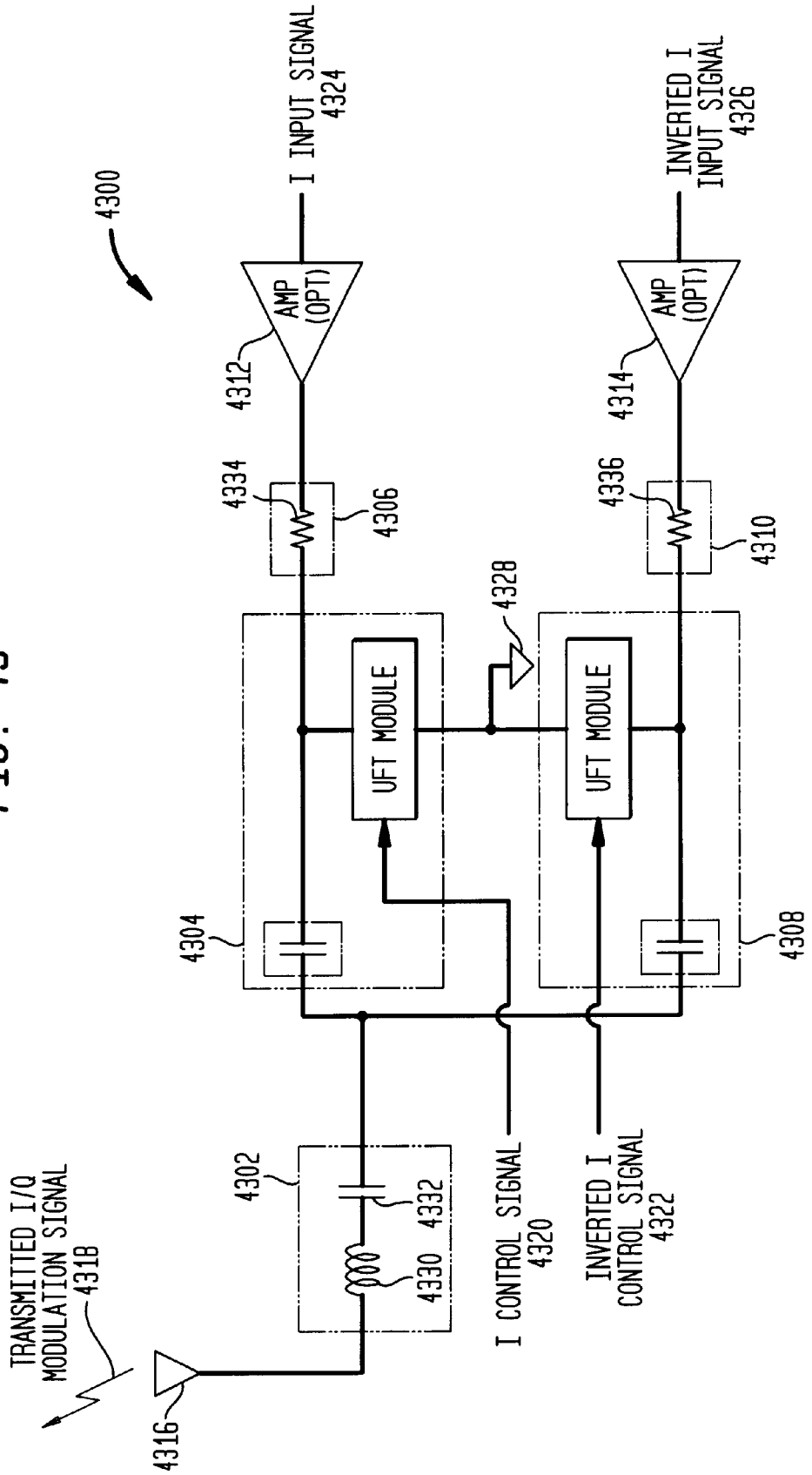
4300
I INPUT SIGNAL
4324
INVERTED I
INPUT SIGNAL
4326
AMP
(OPT)
4312
AMP
(OPT)
4314
4334
4306
4336
4310
4328
UFT MODULE
UFT MODULE
4304
4308
4302
4332
4330
I CONTROL SIGNAL
4320
INVERTED I
CONTROL SIGNAL
4322
TRANSMITTED I/Q
MODULATION SIGNAL
431B
4316

FIG. 43

FIG. 44A

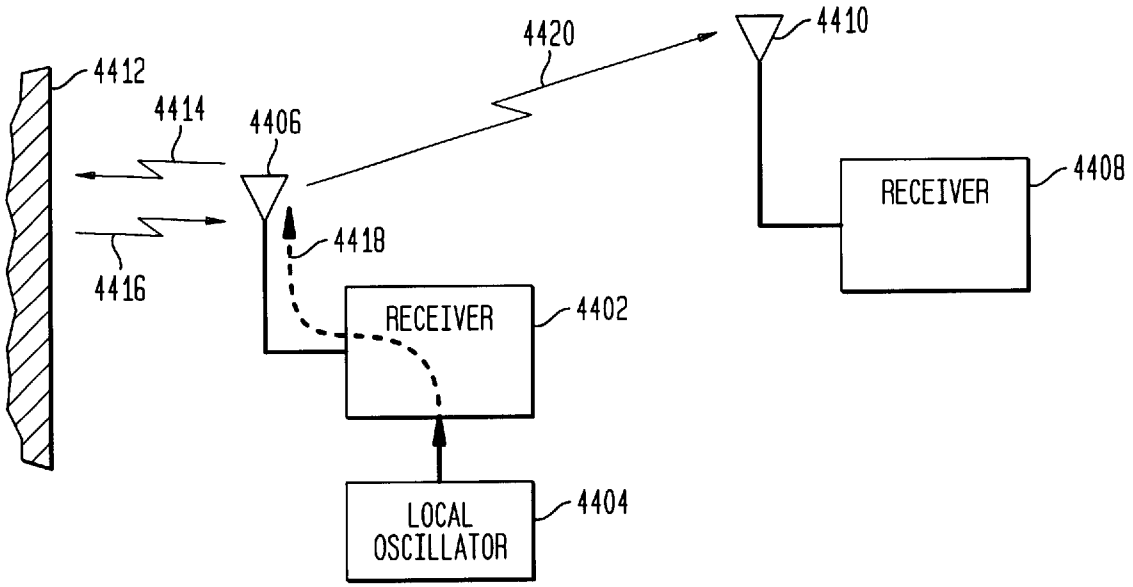

FIG. 44B

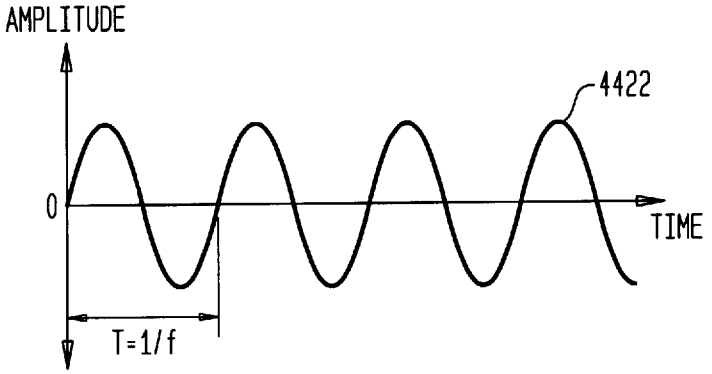

FIG. 44C

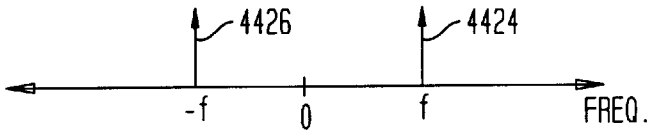

FIG. 44D

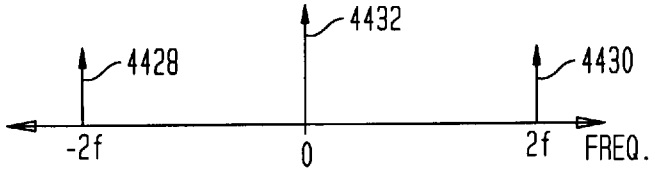

FIG. 45A

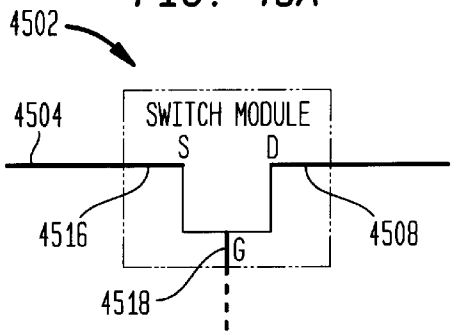

FIG. 45B

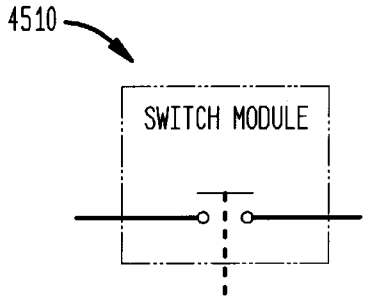

FIG. 45C

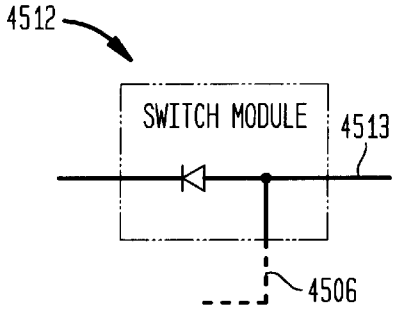

FIG. 45D

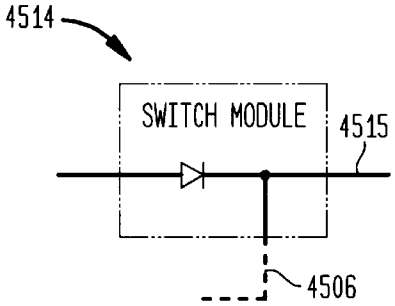

FIG. 46A

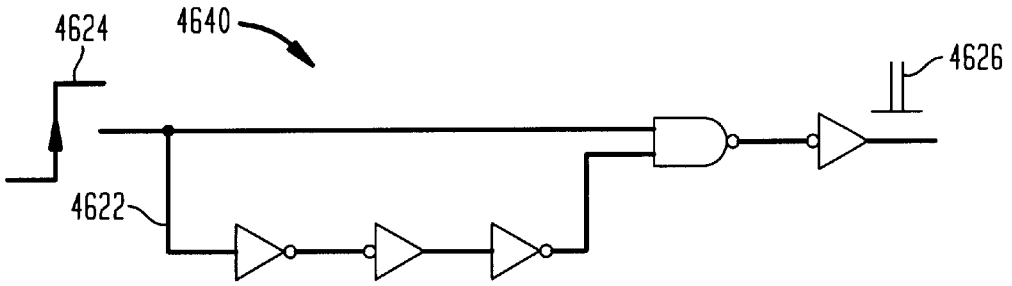

RISING EDGE PULSE GENERATOR

FIG. 46B

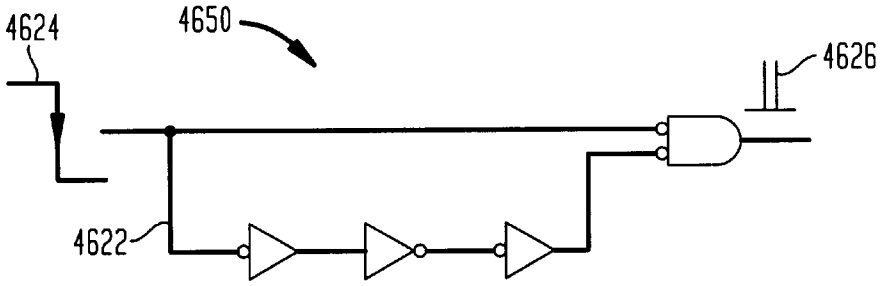

FALLING-EDGE PULSE GENERATOR

FIG. 46C

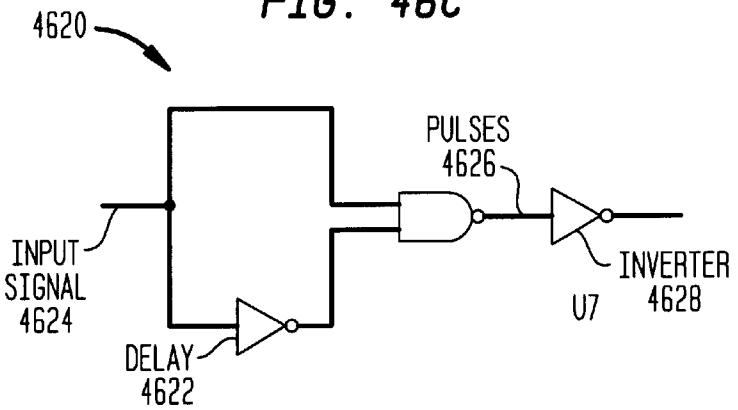

-SUBSTANTIAL EQUIVALENCE IN LOGIC ONLY IS NECESSARY.
-u7 SHOWN FOR POLARITY CONSISTENCY WITH
CKT EXAMPLES DESCRIBED ELSEWHERE

FIG. 46D

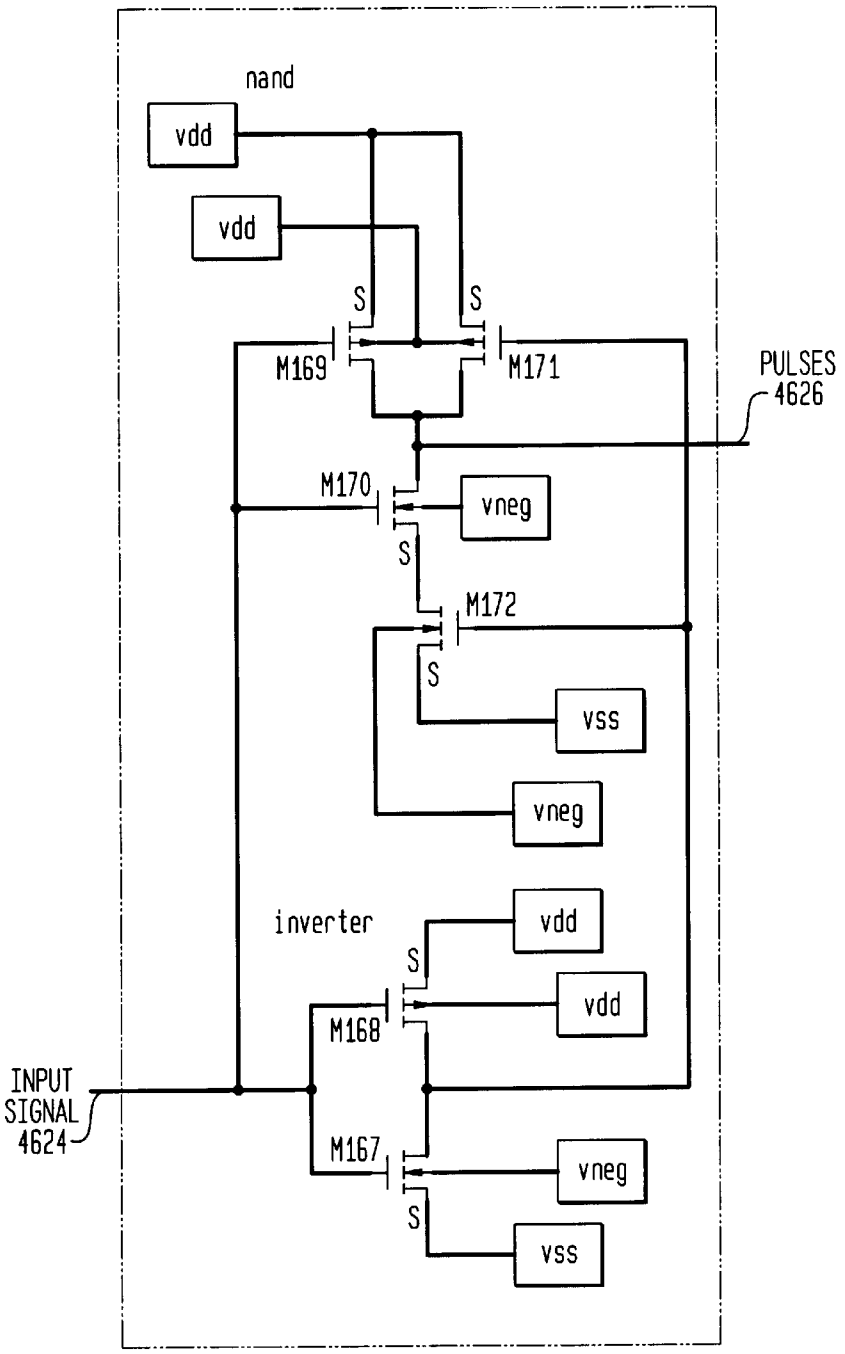

FIG. 46E

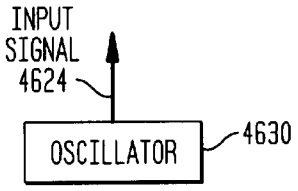

FIG. 47

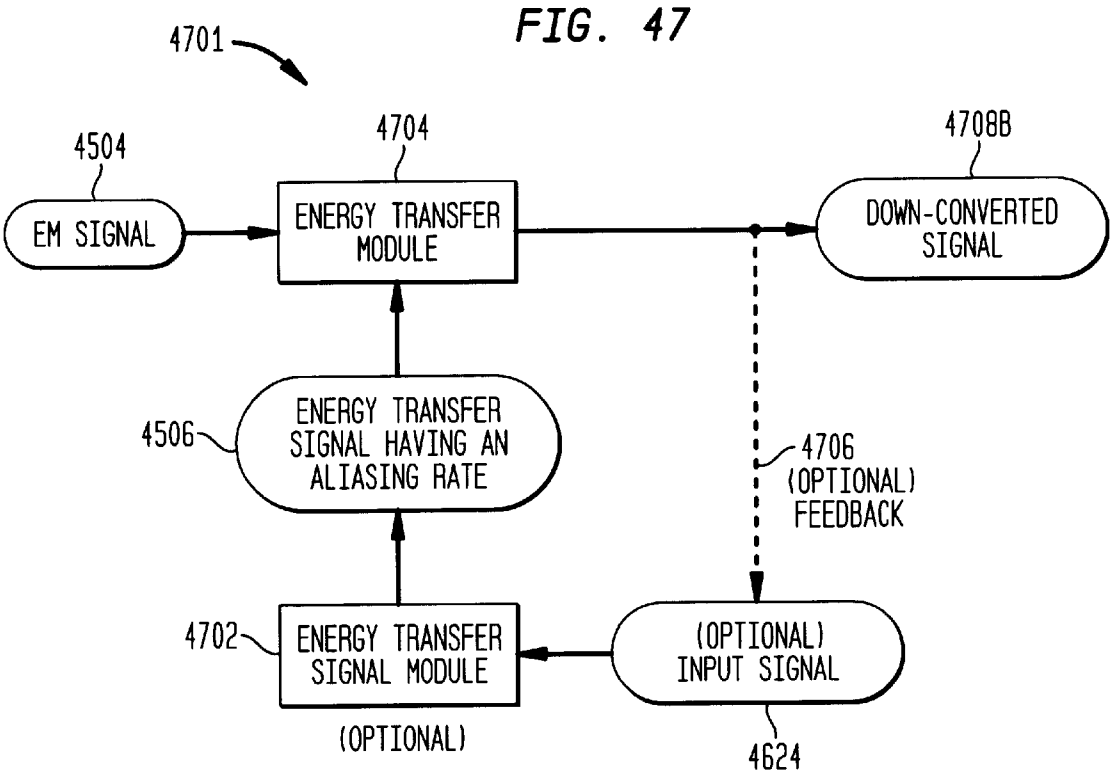
4701
4504
EM SIGNAL
4704
ENERGY TRANSFER MODULE
4708B
DOWN-CONVERTED SIGNAL
4506
ENERGY TRANSFER SIGNAL HAVING AN ALIASING RATE
4706
(OPTIONAL) FEEDBACK
4702
ENERGY TRANSFER SIGNAL MODULE
(OPTIONAL)
(OPTIONAL) INPUT SIGNAL
4624

FIG. 48

IMPEDANCE MATCHED ALIASING MODULE

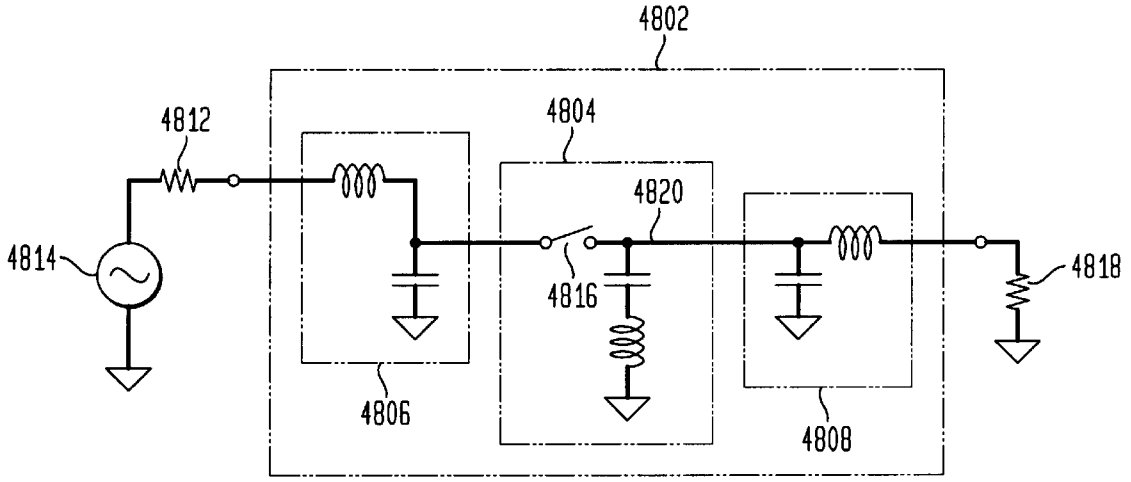

FIG. 49A

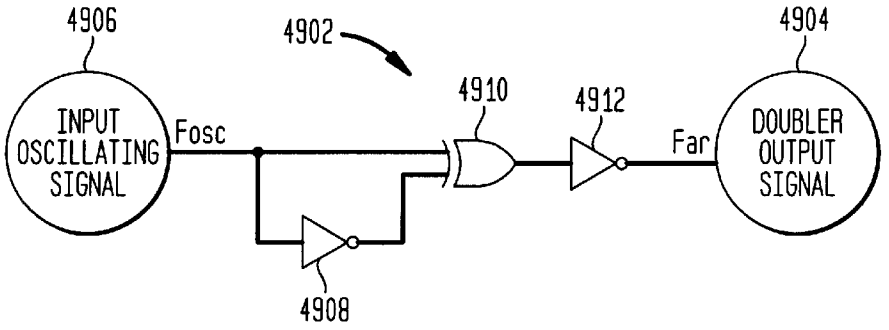

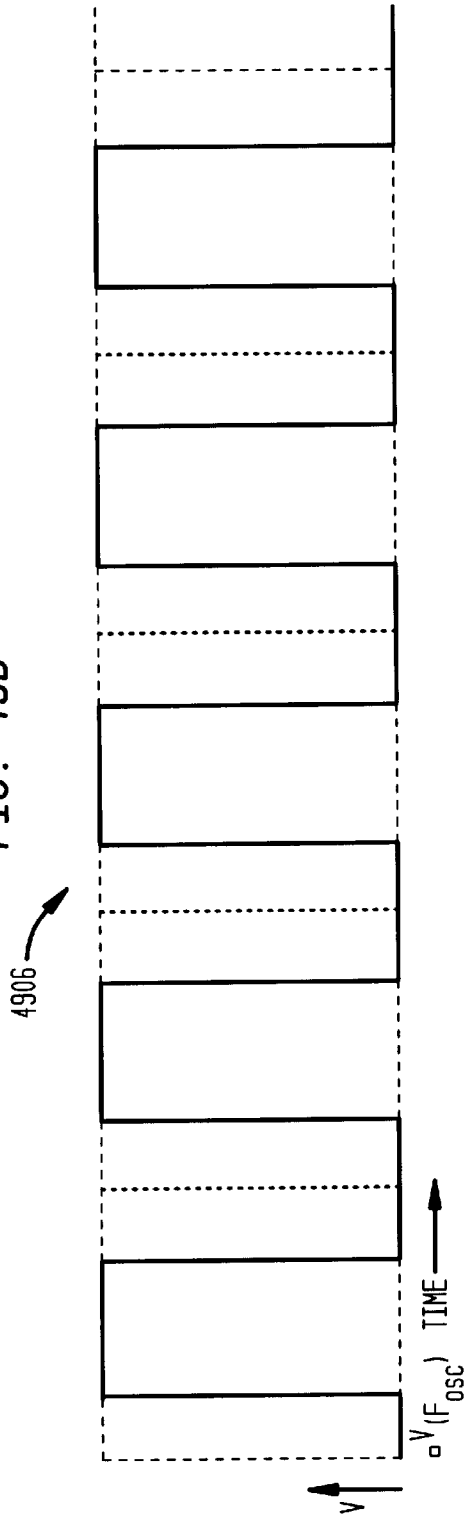

FIG. 49B

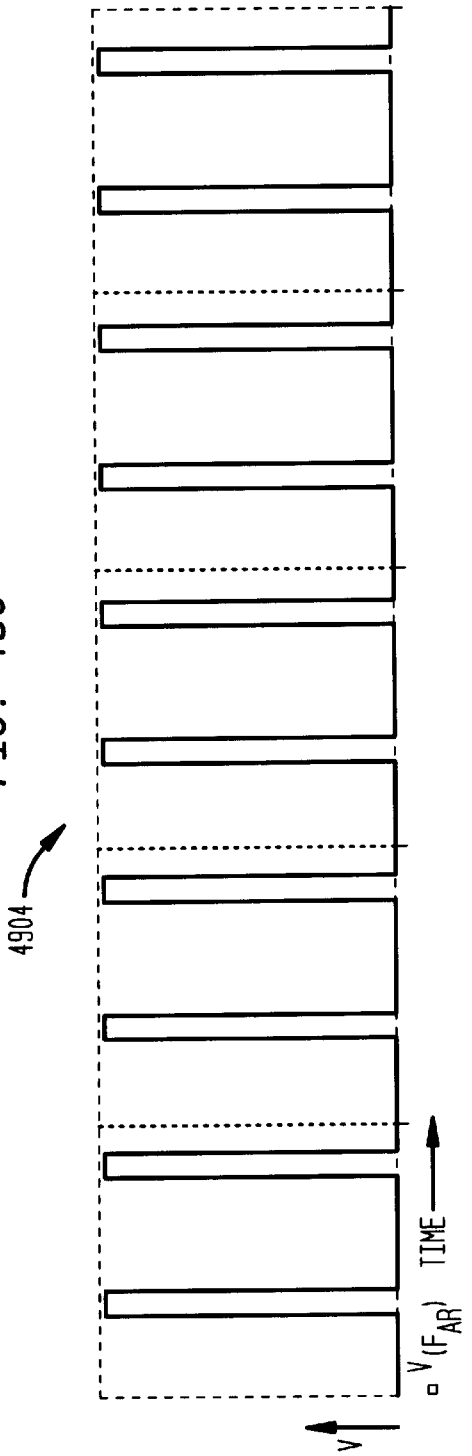

FIG. 49C

FIG. 50

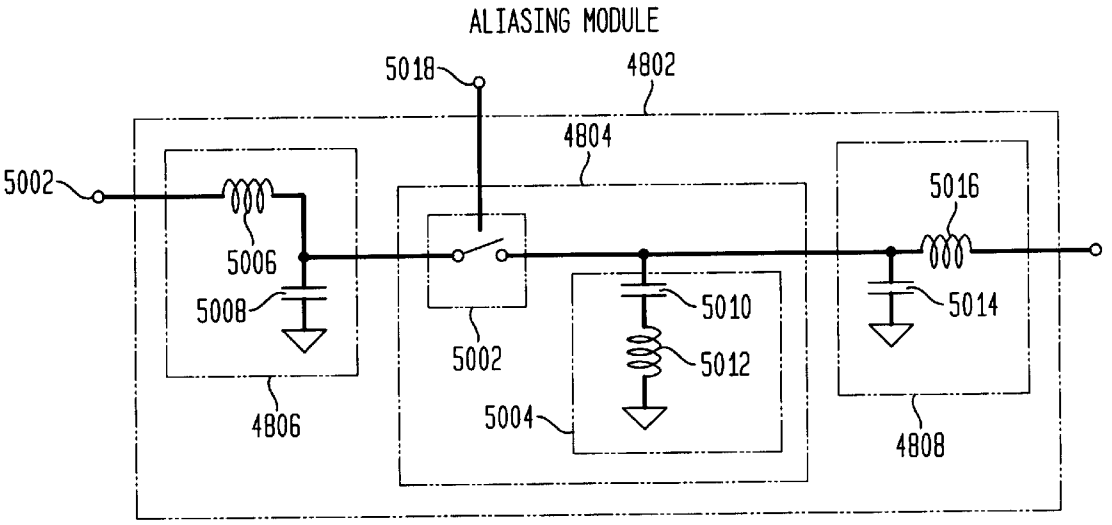
ALIASING MODULE
5018
4802
4804
5002
5006
5008
4806
5002
5010
5012
5004
5016
5014
4808

FIG. 51A

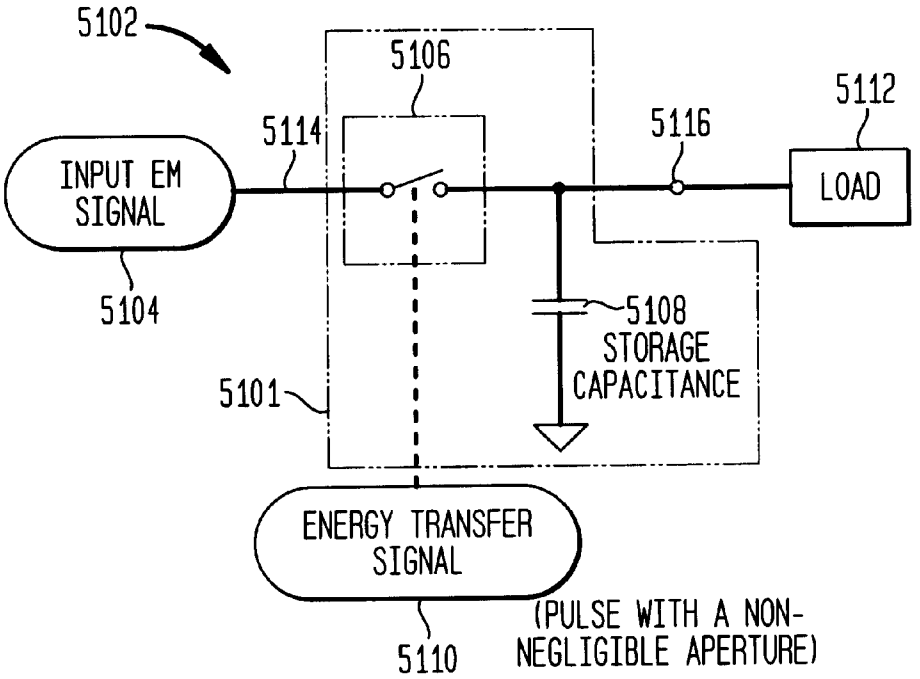

FIG. 51B

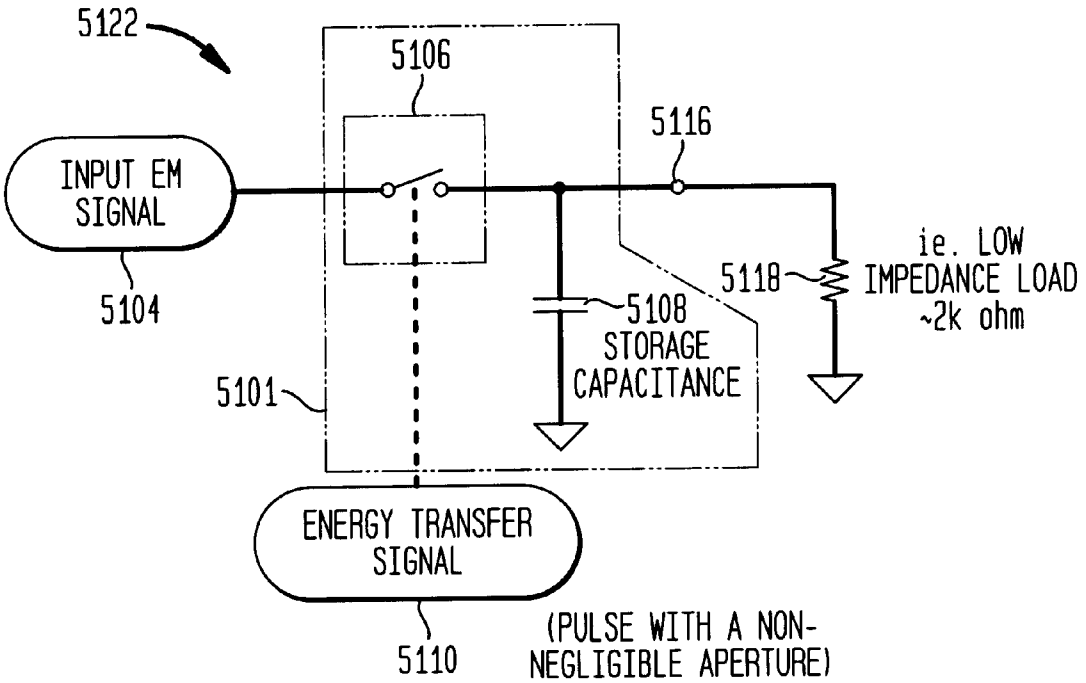

FIG. 52A

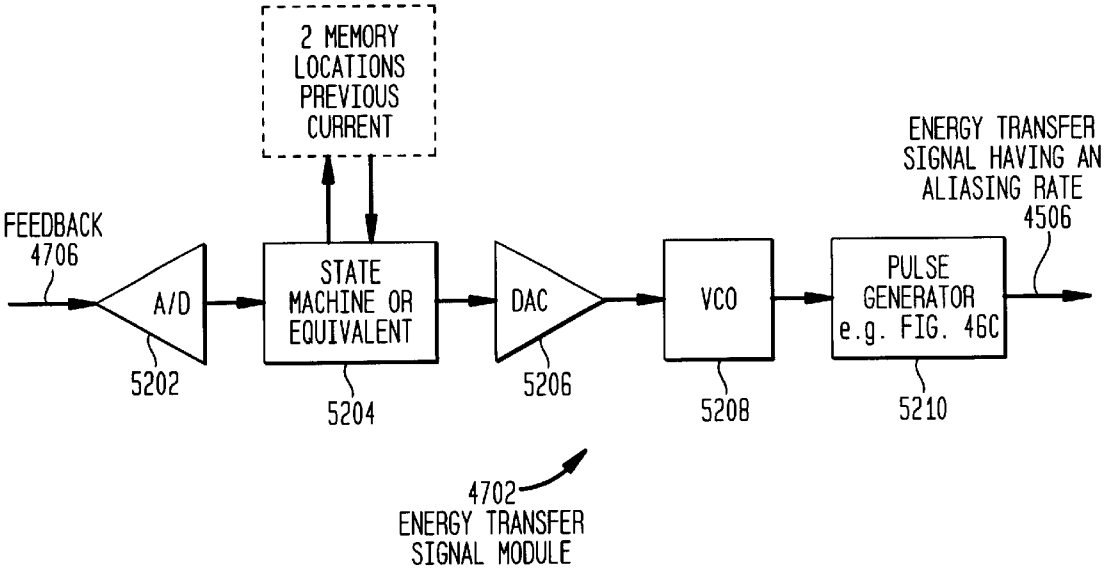
2 MEMORY LOCATIONS PREVIOUS CURRENT
ENERGY TRANSFER SIGNAL HAVING AN ALIASING RATE
4506
FEEDBACK
4706
A/D
STATE MACHINE OR EQUIVALENT
DAC
VCO
PULSE GENERATOR e.g. FIG. 46C
5202
5204
5206
5208
5210
4702
ENERGY TRANSFER SIGNAL MODULE

FIG. 52B

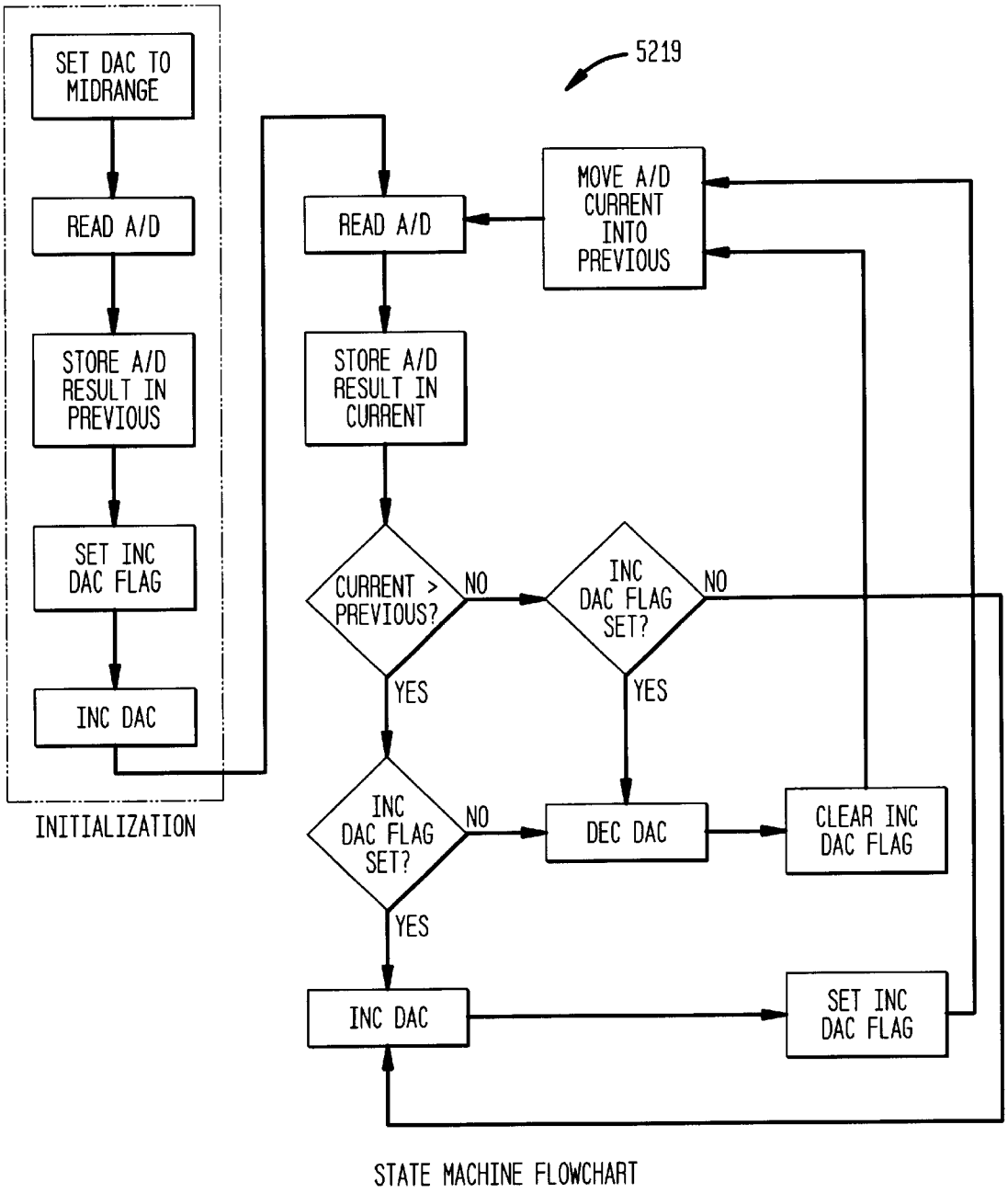
5219
SET DAC TO MIDRANGE
READ A/D
STORE A/D RESULT IN PREVIOUS
SET INC DAC FLAG
INC DAC
INITIALIZATION
READ A/D
STORE A/D RESULT IN CURRENT
MOVE A/D CURRENT INTO PREVIOUS
CURRENT > PREVIOUS?
NO
YES
INC DAC FLAG SET?
NO
YES
INC DAC FLAG SET?
NO
YES
DEC DAC
CLEAR INC DAC FLAG
INC DAC
SET INC DAC FLAG
STATE MACHINE FLOWCHART

FIG. 52C

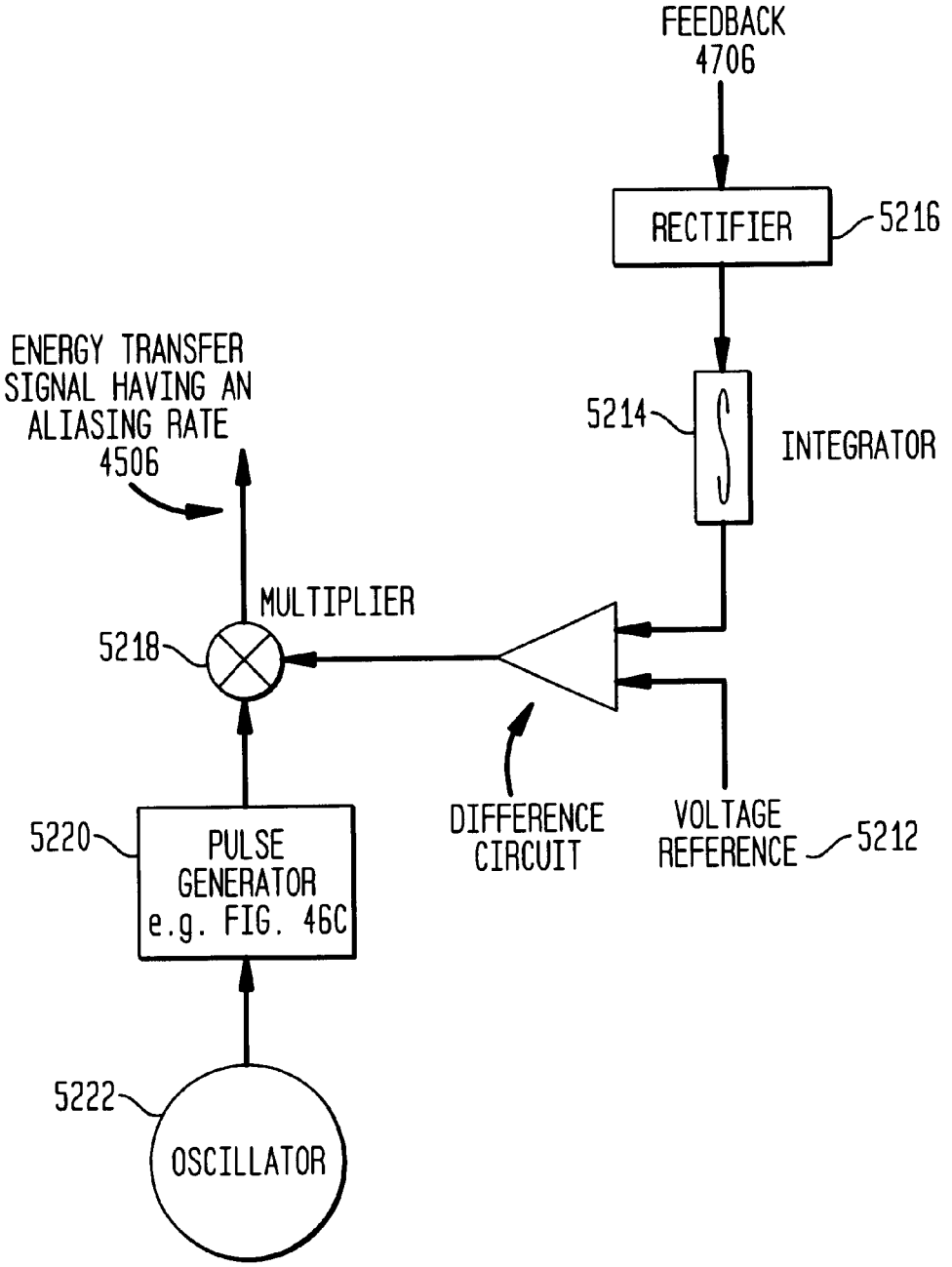

ENERGY TRANSFER SIGNAL MODULE 4702

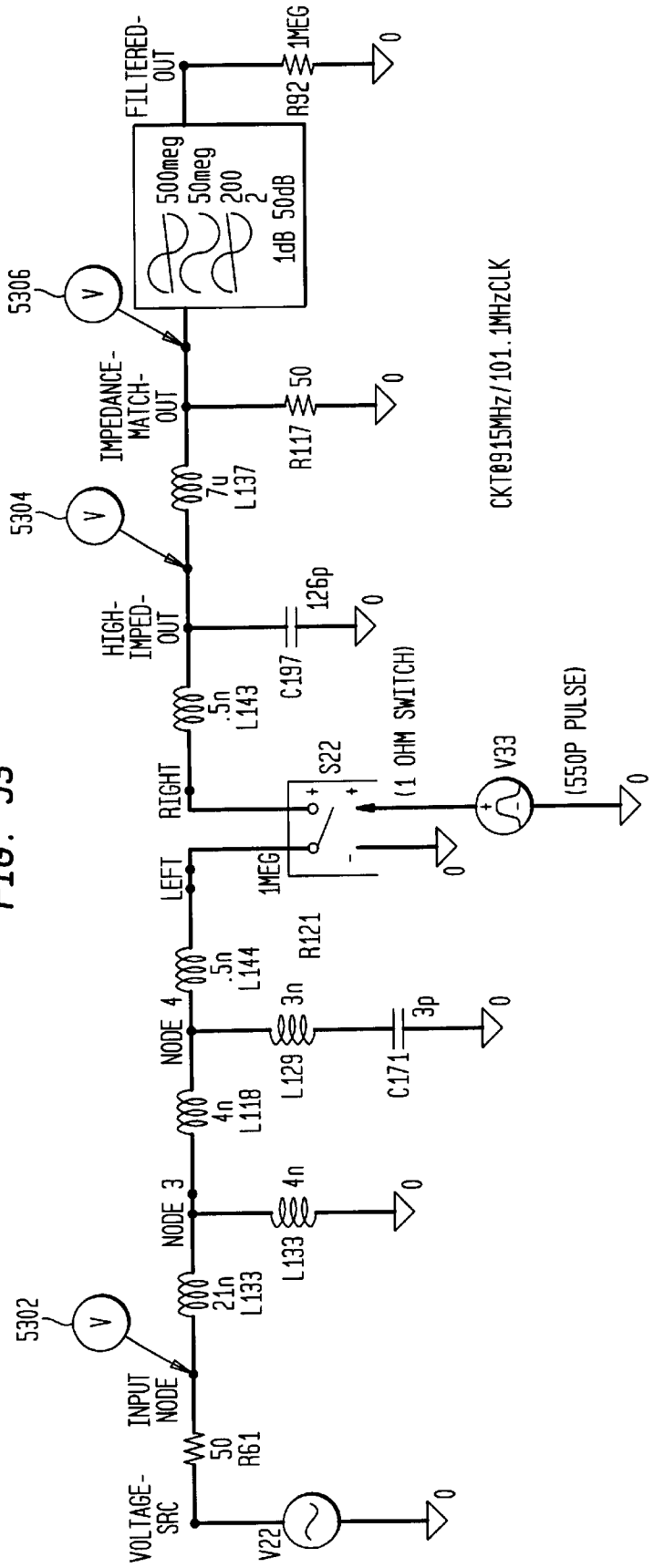
FILTERED-OUT
R92
1MEG
500meg
50meg
200
2
1dB 50dB
5306
IMPEDANCE-MATCH-OUT
R117
50
CKT@915MHz/101.1MHzCLK
5304
7u
L137
HIGH-IMPED-OUT
C197
126p
.5n
L143
RIGHT
S22
(1 OHM SWITCH)
V33
(550P PULSE)
LEFT
1MEG
R121
.5n
L144
NODE 4
3n
L129
C171
3p
4n
L118
NODE 3
4n
L133
21n
L133
5302
INPUT NODE
50
R61
VOLTAGE-SRC
V22

FIG. 53

FIG. 54

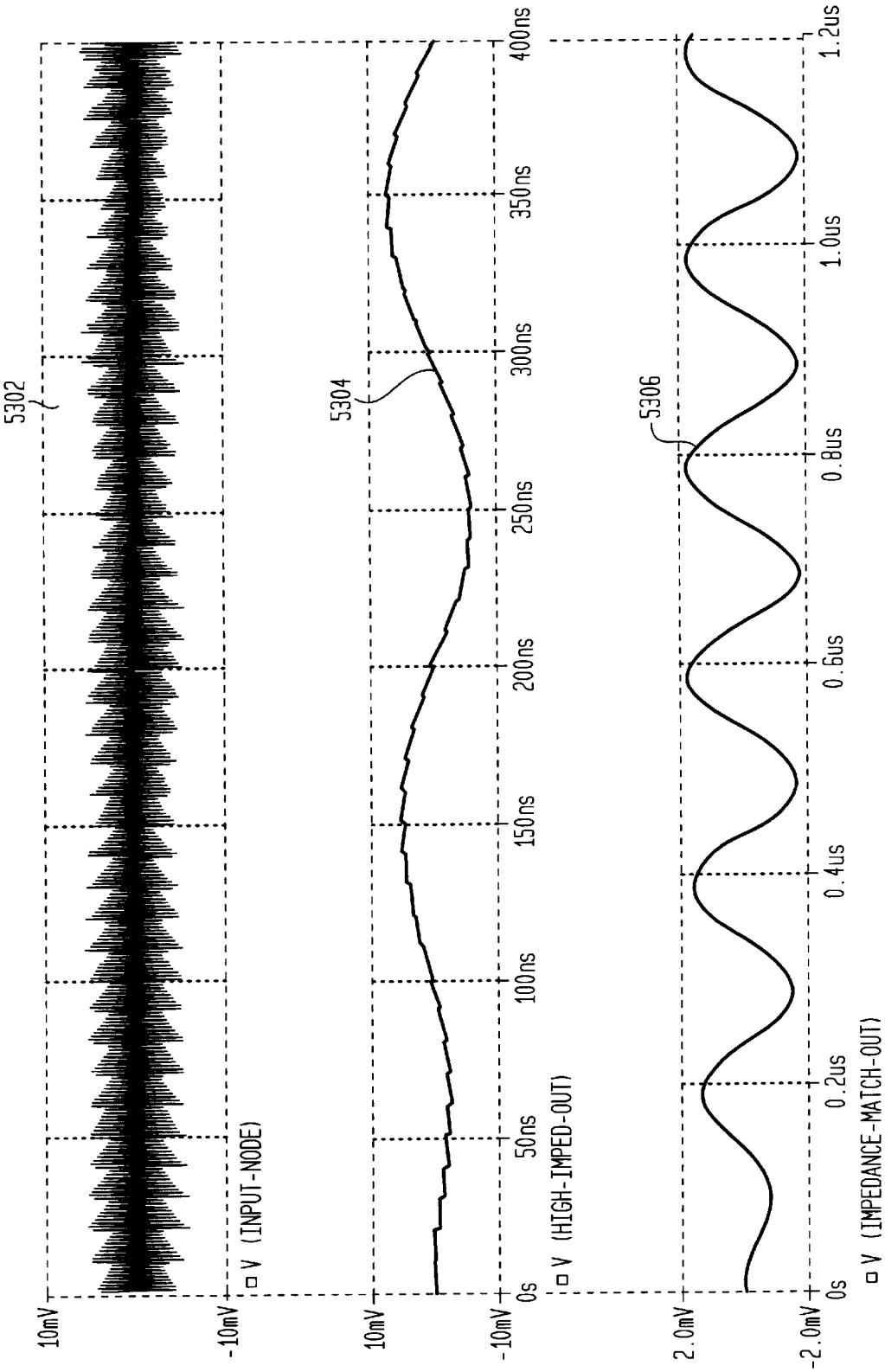
5302
5304
5306
10mV
-10mV
V (INPUT-NODE)
10mV
-10mV
V (HIGH-IMPED-OUT)
2.0mV
-2.0mV
V (IMPEDANCE-MATCH-OUT)
0s
50ns
100ns
150ns
200ns
250ns
300ns
350ns
400ns
0s
0.2us
0.4us
0.6us
0.8us
1.0us
1.2us

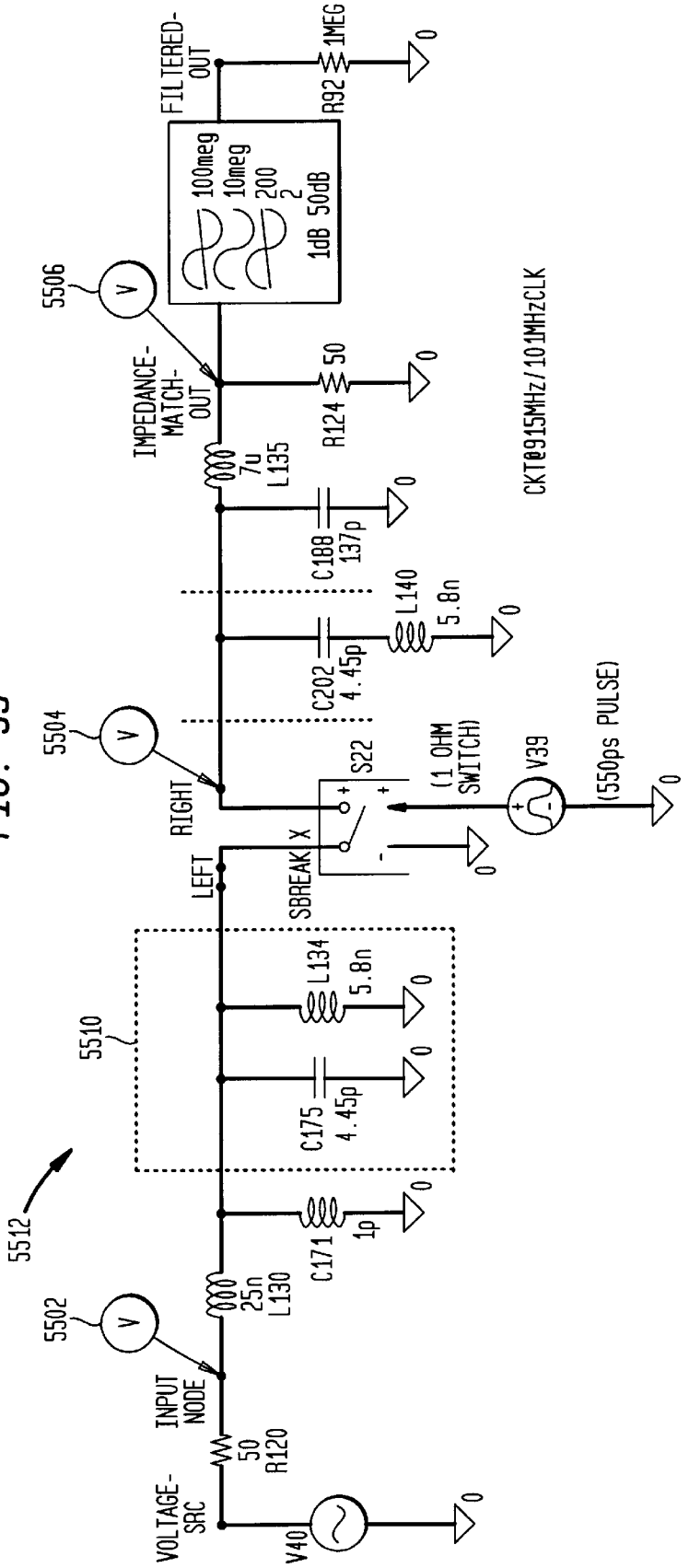
FILTERED-OUT
R92
1MEG
100meg
10meg
200
2
1dB 50dB
5506
IMPEDANCE-MATCH-OUT
R124
50
7u
L135
C188
137p
CKT@915MHz/101MHzCLK
L140
5.8n
C202
4.45p
5504
RIGHT
S22
(1 OHM SWITCH)
V39
(550ps PULSE)
LEFT
SBREAK X
L134
5.8n
5510
C175
4.45p
5512
C171
1p
5502
25n
L130
INPUT NODE
50
R120
VOLTAGE-SRC
V40

FIG. 55

FIG. 56

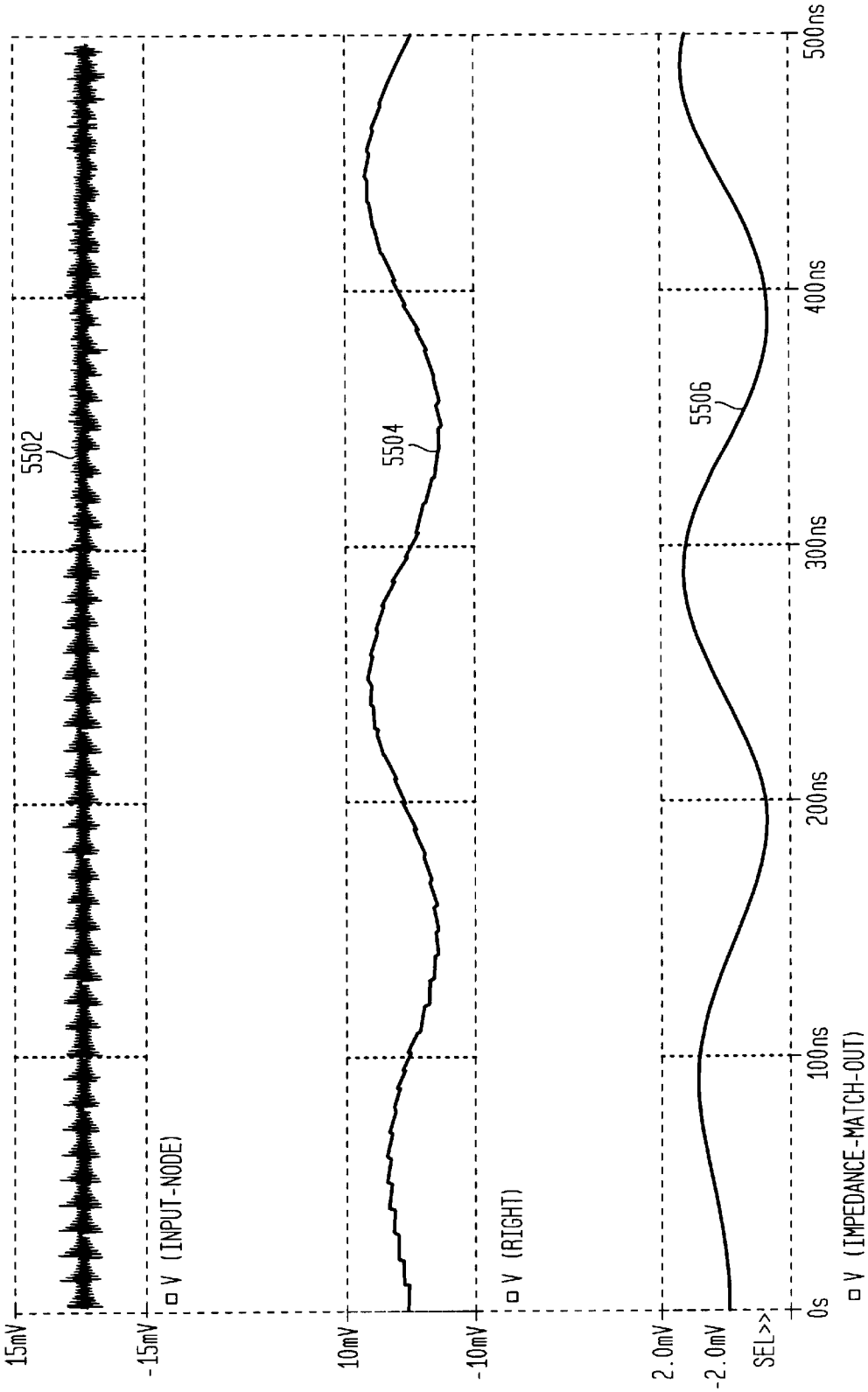
15mV
-15mV
V (INPUT-NODE)
5502
10mV
-10mV
V (RIGHT)
5504
2.0mV
-2.0mV
SEL>>
V (IMPEDANCE-MATCH-OUT)
5506
0s
100ns
200ns
300ns
400ns
500ns

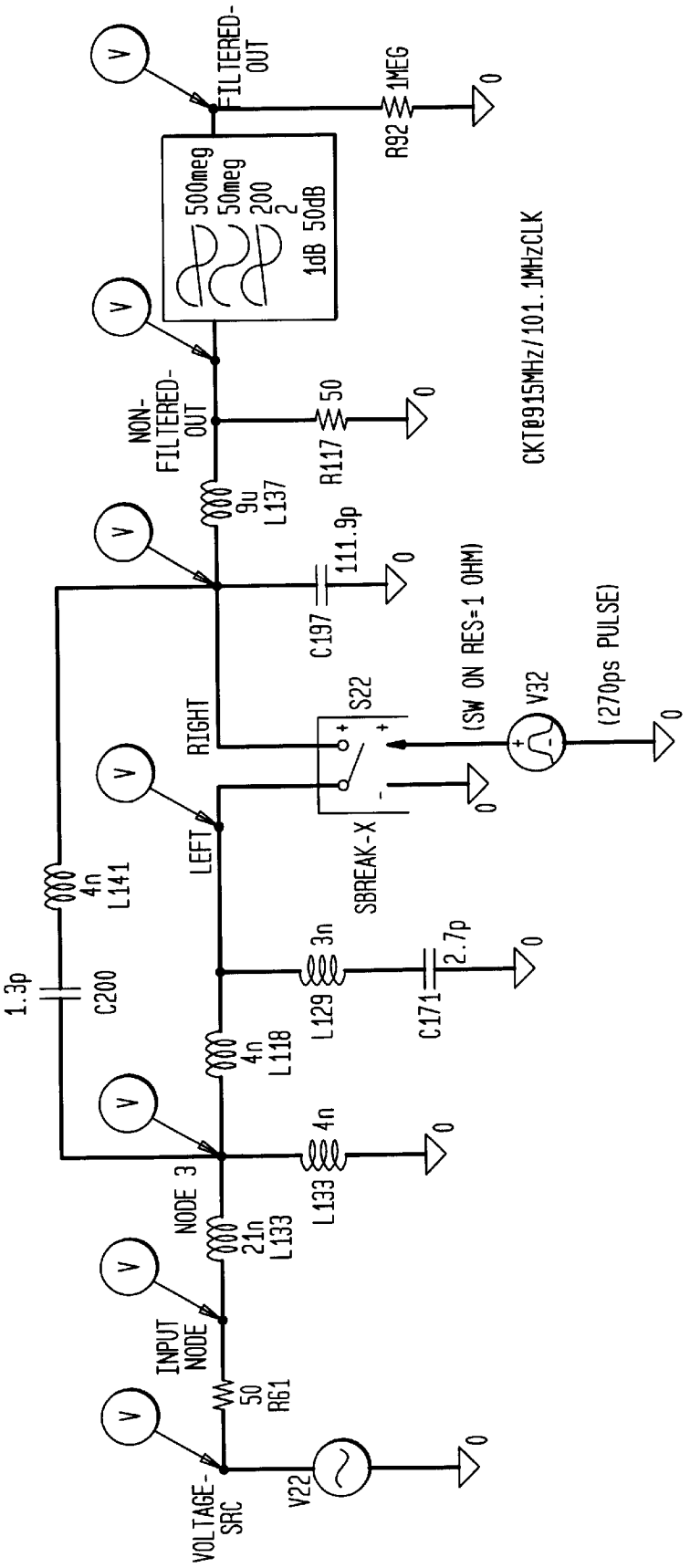
FILTERED-OUT
R92
1MEG
500meg
50meg
200
2
1dB 50dB
NON-FILTERED-OUT
R117
50
CKT@915MHz/101.1MHzCLK
L137
9u
C197
111.9p
RIGHT
S22
(SW ON RES=1 OHM)
V32
(270ps PULSE)
LEFT
SBREAK-X
L141
4n
1.3p
C200
L129
3n
C171
2.7p
L118
4n
L133
4n
NODE 3
L133
21n
INPUT NODE
R61
50
VOLTAGE-SRC
V22

FIG. 57

FIG. 58

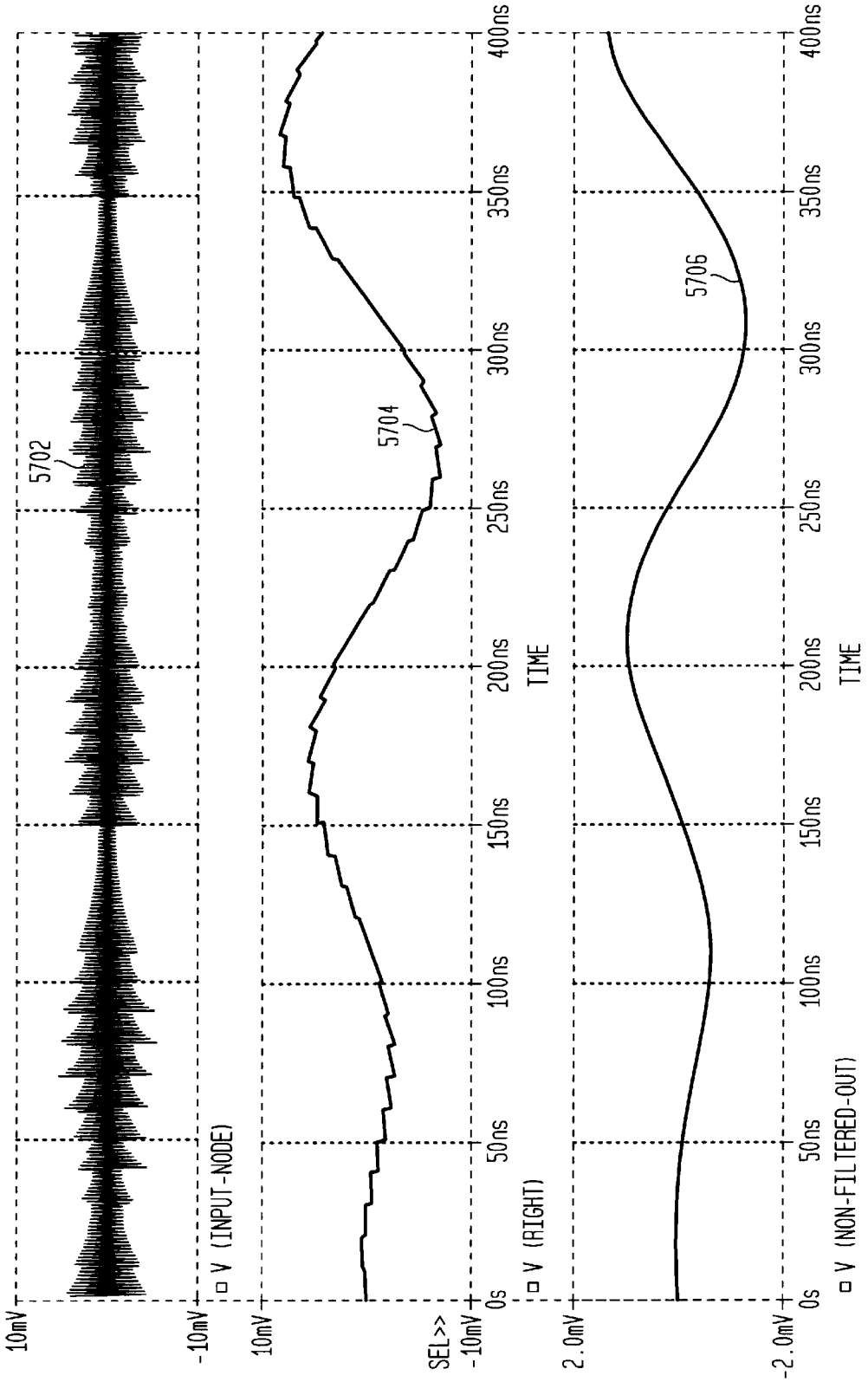
10mV
-10mV
V (INPUT-NODE)
5702
10mV
SEL>>
-10mV
0s
50ns
100ns
150ns
200ns
250ns
300ns
350ns
400ns
TIME
V (RIGHT)
5704
2.0mV
-2.0mV
0s
50ns
100ns
150ns
200ns
250ns
300ns
350ns
400ns
TIME
V (NON-FILTERED-OUT)
5706

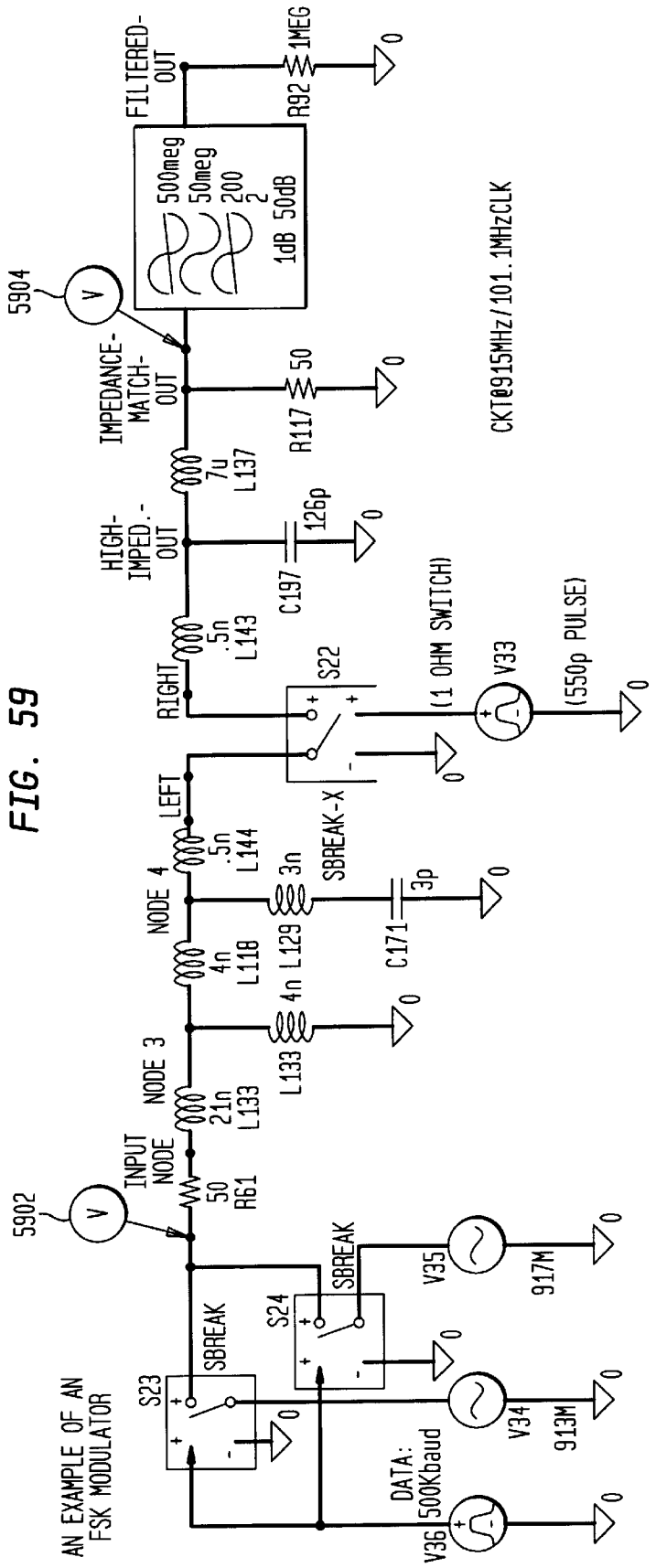
AN EXAMPLE OF AN FSK MODULATOR
5902
5904
INPUT NODE
50 R61
NODE 3
21n L133
NODE 4
4n L118
LEFT
.5n L144
RIGHT
.5n L143
HIGH-IMPED.-OUT
IMPEDANCE-MATCH-OUT
FILTERED-OUT
7u L137
126p C197
50 R117
1MEG R92
500meg
50meg
200
2
1dB 500dB
4n L133
3n L129
3p C171
SBREAK-X
S22
(1 OHM SWITCH)
V33
(550p PULSE)
SBREAK
S23
S24
V35
917M
V34
913M
V36
DATA: 500Kbaud
CKT@915MHz/101.1MHzCLK

FIG. 59

FIG. 60A

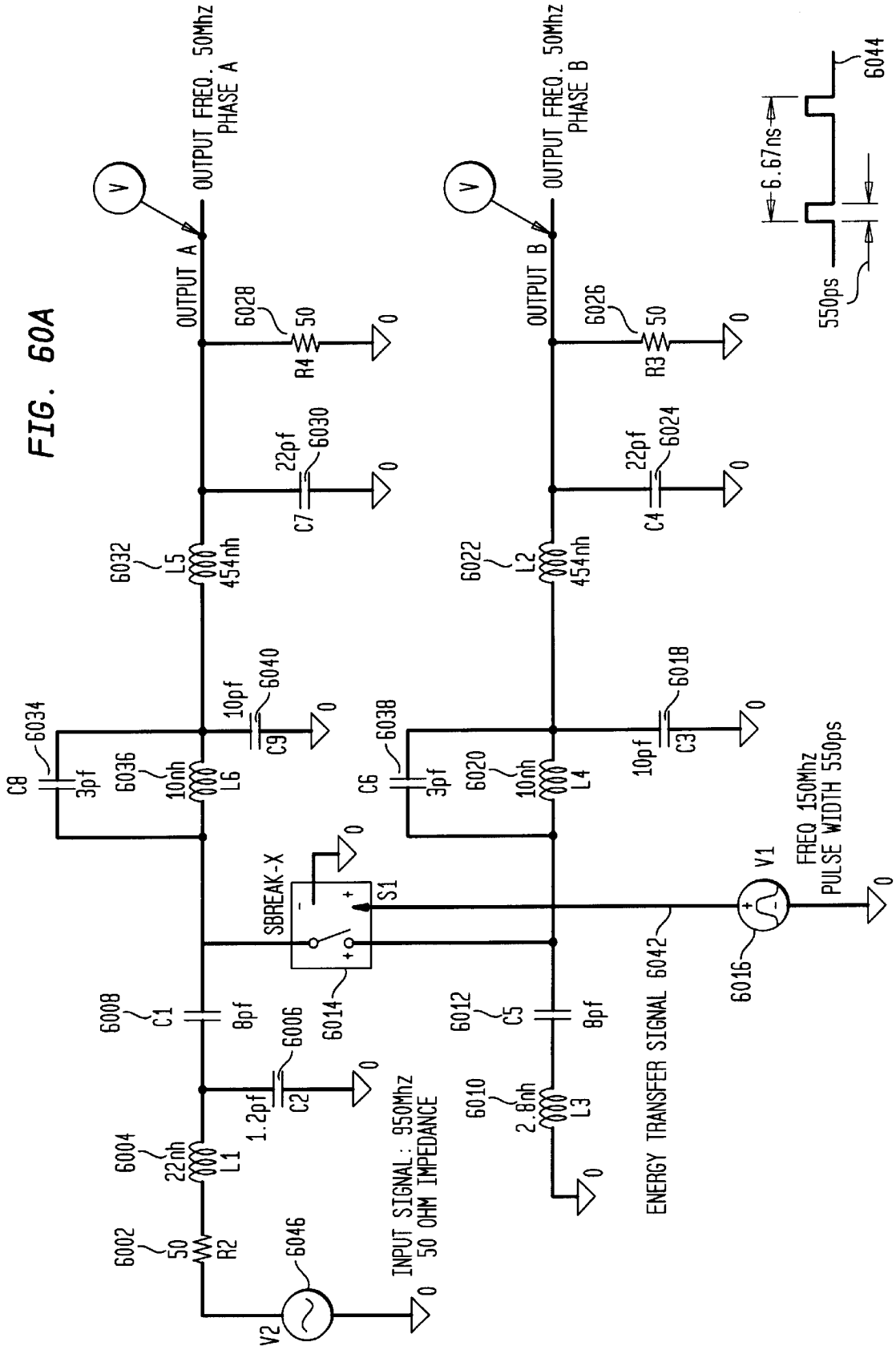
OUTPUT FREQ. 50Mhz
PHASE A
OUTPUT A
6028
50
R4
22pf
6030
C7
6032
L5
454nh
10pf
6040
C9
6034
C8
3pf
6036
10nh
L6
SBREAK-X
S1
6014
6008
C1
8pf
6006
1.2pf
C2
6004
22nh
L1
6002
50
R2
6046
V2
INPUT SIGNAL: 950Mhz
50 OHM IMPEDANCE
OUTPUT FREQ. 50Mhz
PHASE B
OUTPUT B
6026
50
R3
22pf
6024
C4
6022
L2
454nh
6018
10pf
C3
6038
C6
3pf
6020
10nh
L4
6012
C5
8pf
6010
2.8nh
L3
ENERGY TRANSFER SIGNAL 6042
V1
6016
FREQ 150Mhz
PULSE WIDTH 550ps
6.67ns
550ps
6044

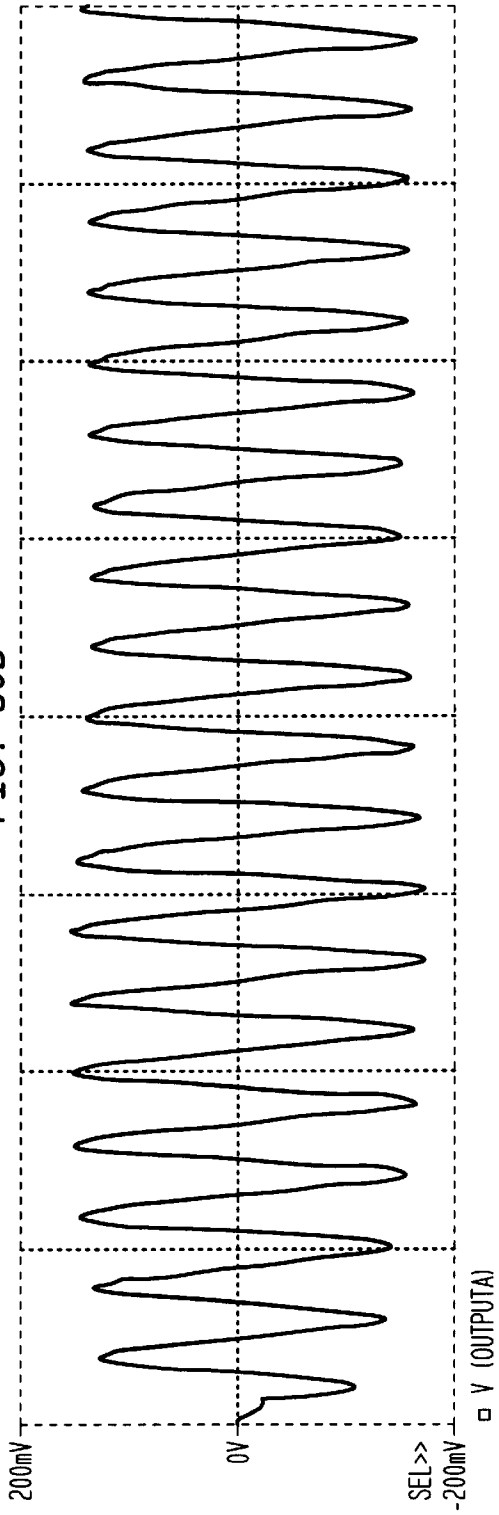

FIG. 60B

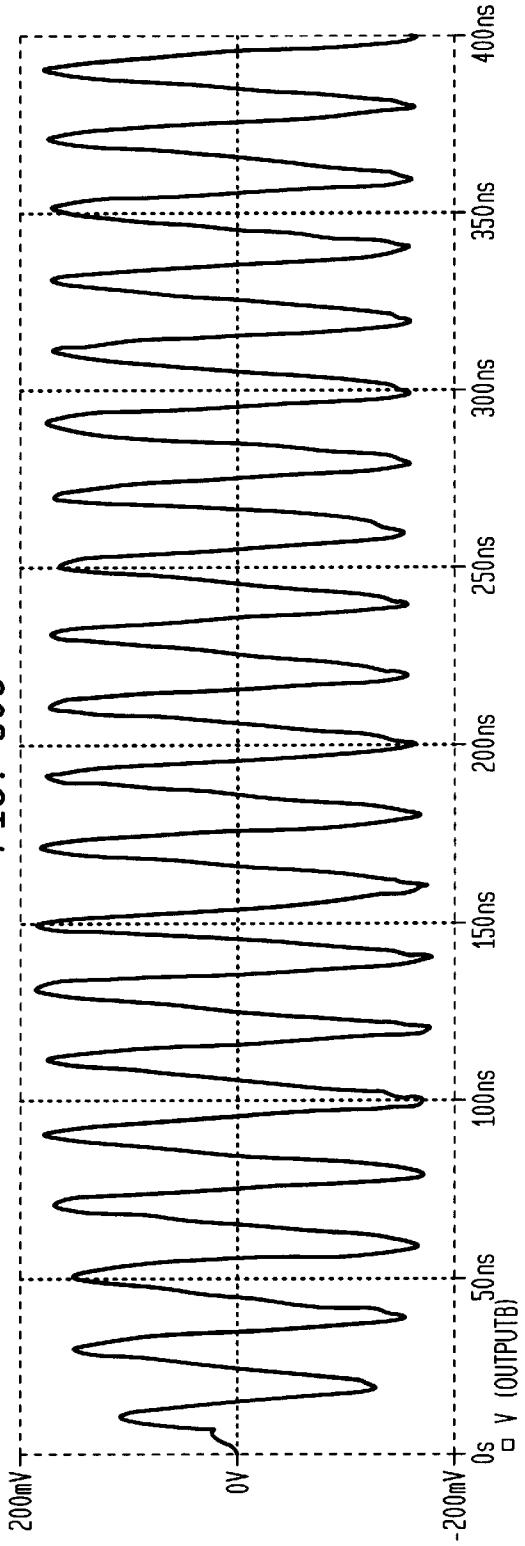

FIG. 60C

FIG. 61

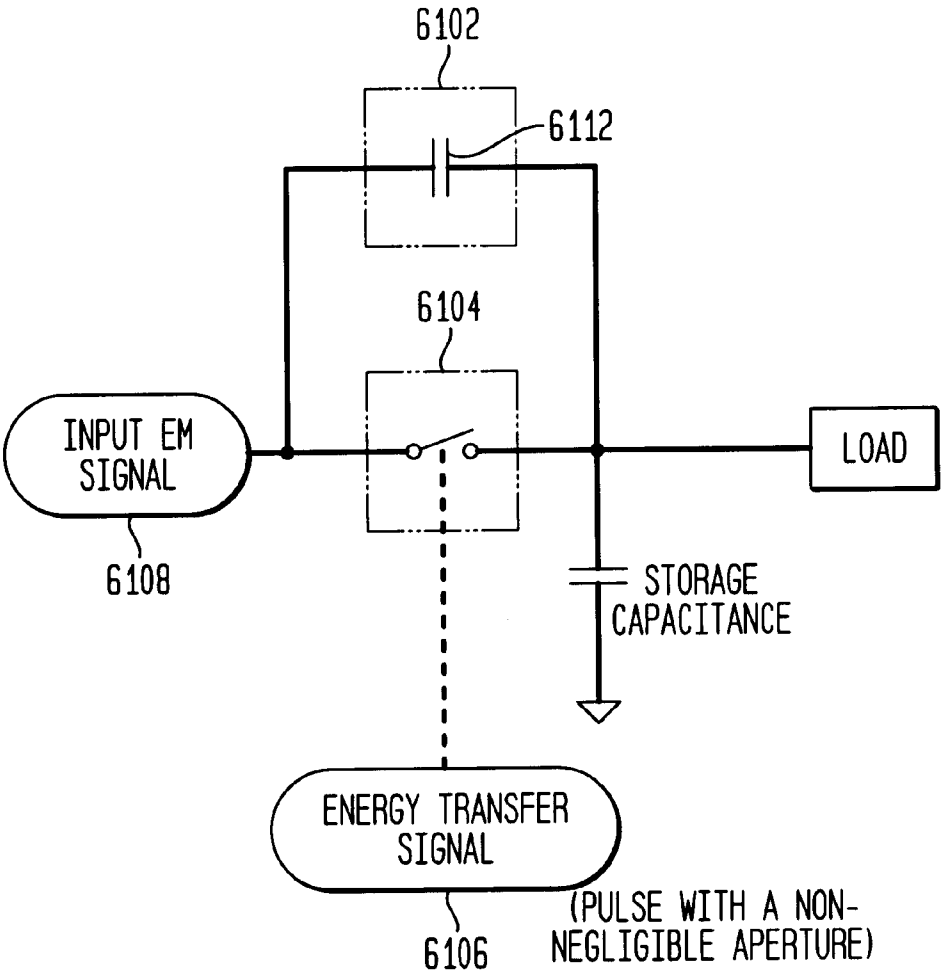
6102
6112
6104
INPUT EM SIGNAL
6108
LOAD
STORAGE CAPACITANCE
ENERGY TRANSFER SIGNAL
6106
(PULSE WITH A NON-NEGLIGIBLE APERTURE)

FIG. 62

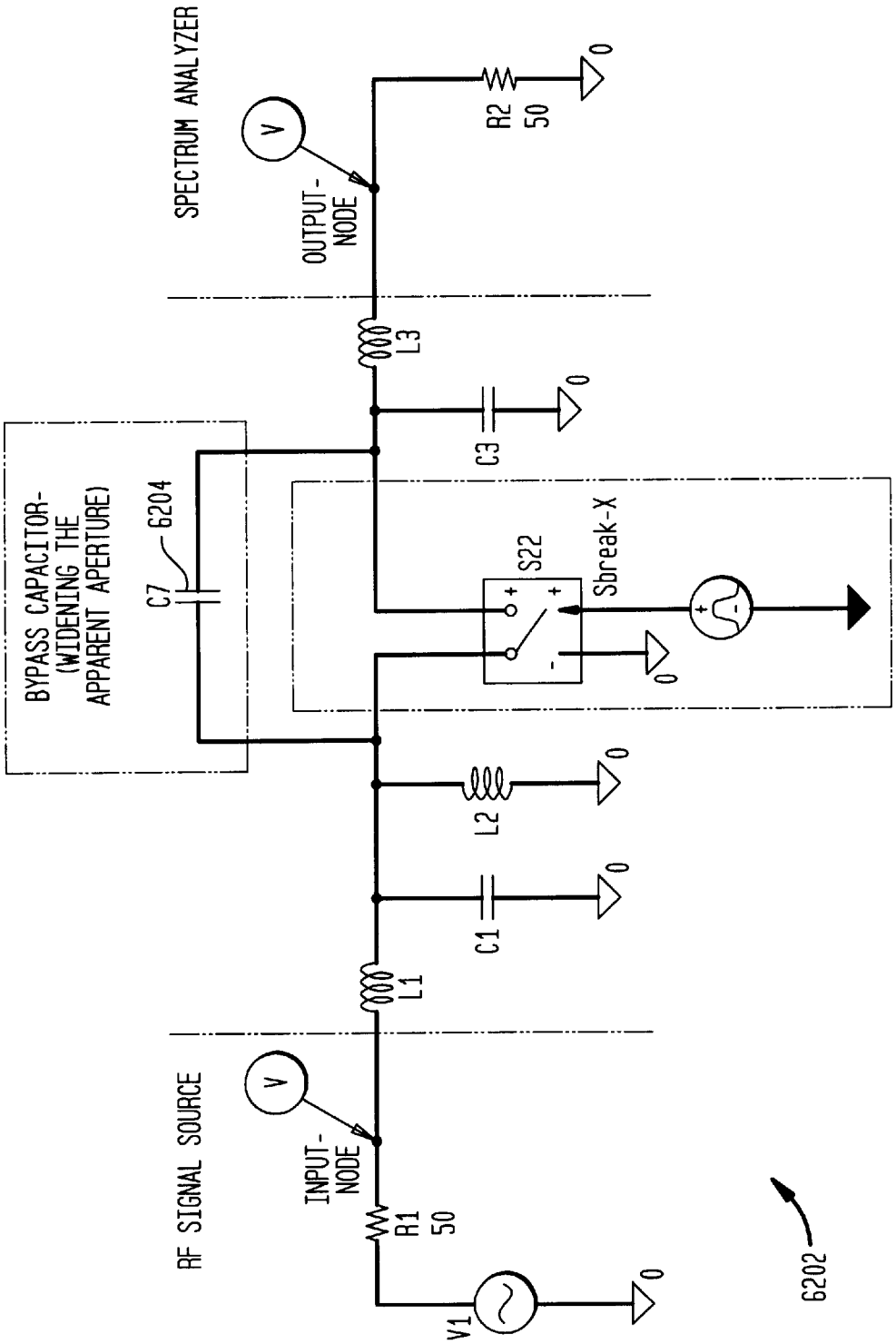
SPECTRUM ANALYZER
OUTPUT-NODE
R2
50
L3
C3
BYPASS CAPACITOR-(WIDENING THE APPARENT APERTURE)
C7
6204
S22
Sbreak-X
L2
C1
L1
RF SIGNAL SOURCE
INPUT-NODE
R1
50
V1
6202

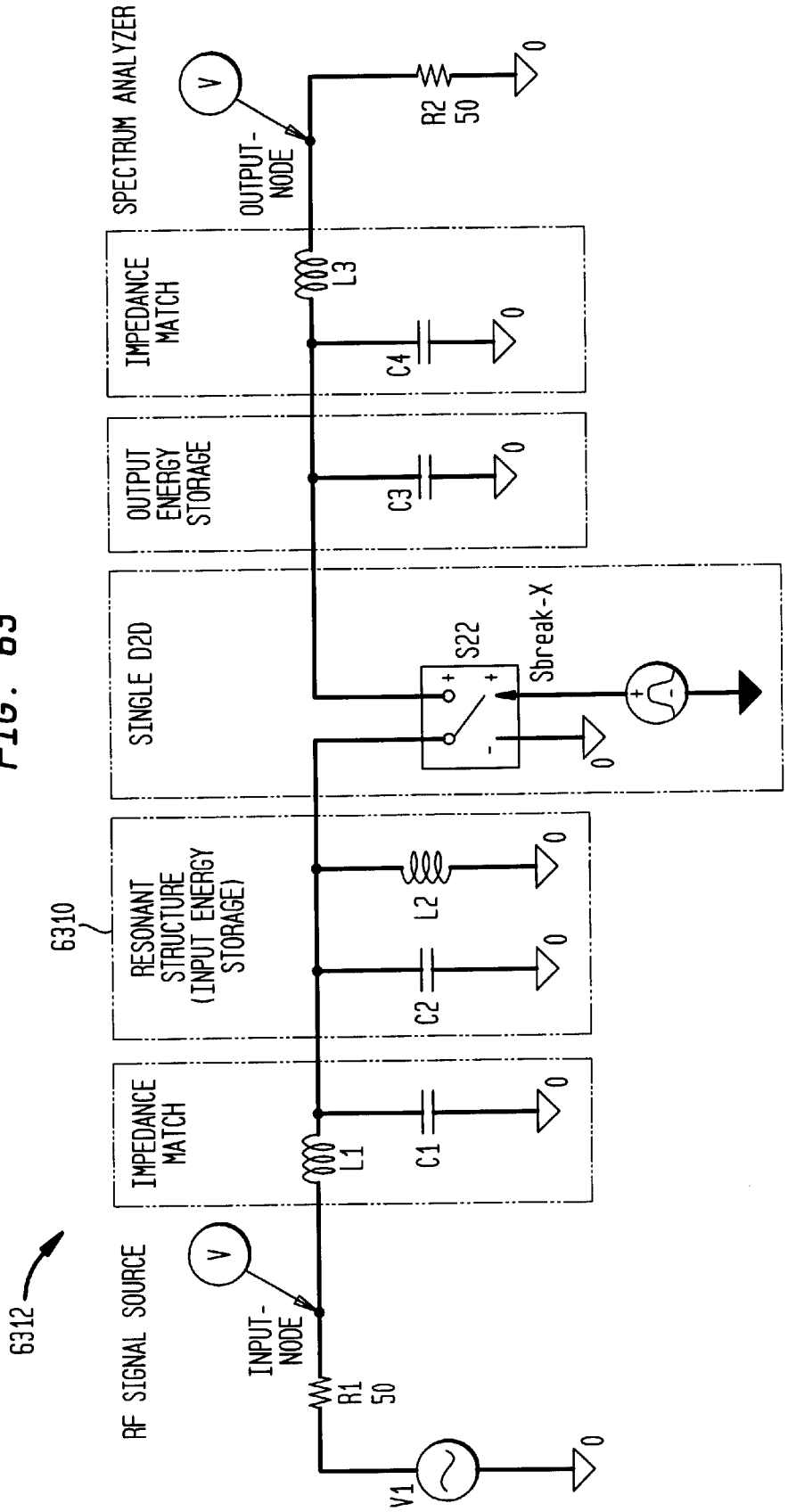
6312
RF SIGNAL SOURCE
V
INPUT-NODE
R1
50
V1
0
IMPEDANCE MATCH
L1
C1
0
6310
RESONANT STRUCTURE (INPUT ENERGY STORAGE)
L2
C2
0
0
SINGLE D2D
S22
Sbreak-X
0
OUTPUT ENERGY STORAGE
C3
0
IMPEDANCE MATCH
L3
C4
0
SPECTRUM ANALYZER
V
OUTPUT-NODE
R2
50
0

FIG. 63

FIG. 64A

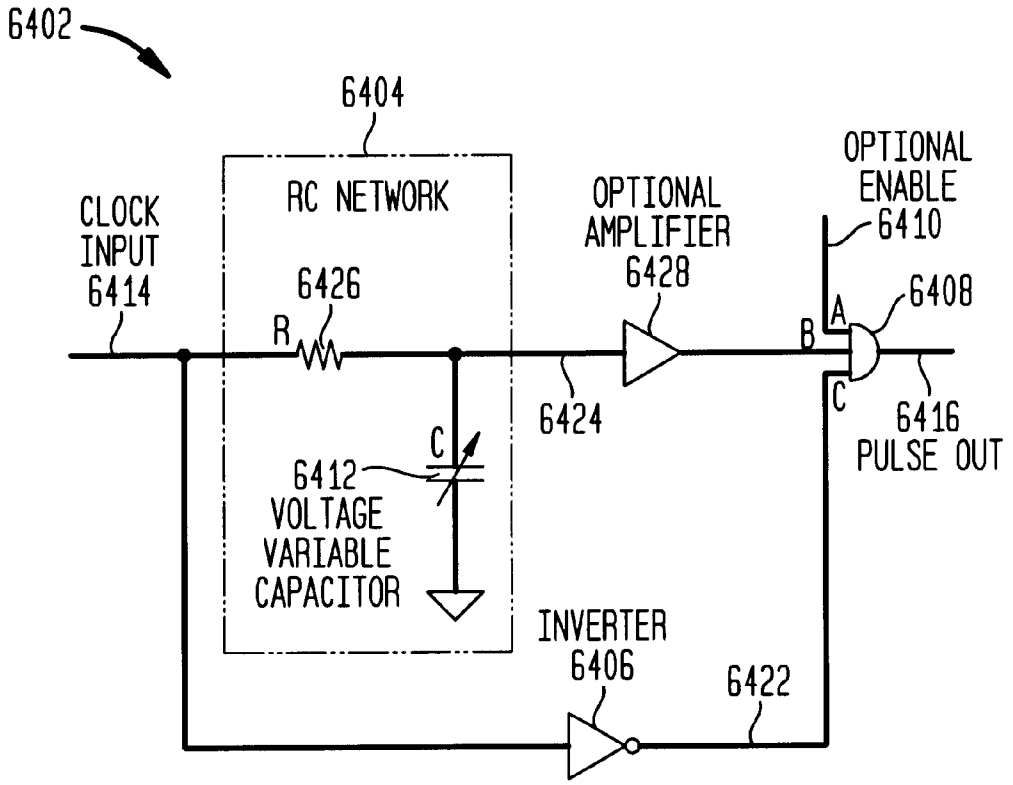
6402
6404
RC NETWORK
CLOCK INPUT 6414
6426
R
C
6412 VOLTAGE VARIABLE CAPACITOR
OPTIONAL AMPLIFIER 6428
6424
OPTIONAL ENABLE 6410
6408
A
B
C
6416 PULSE OUT
INVERTER 6406
6422

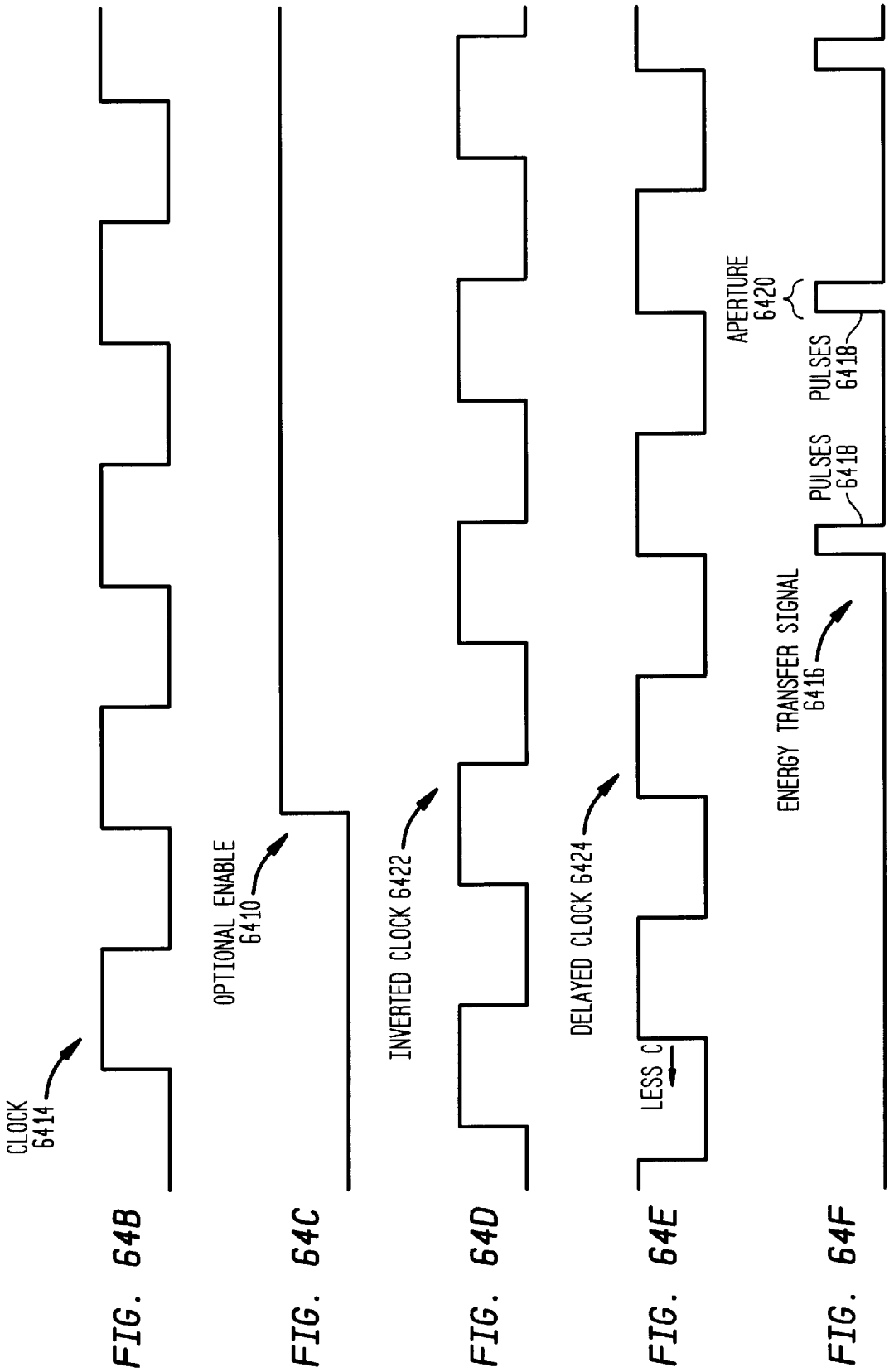

FIG. 64B

FIG. 64C

FIG. 64D

FIG. 64E

FIG. 64F

FIG. 65

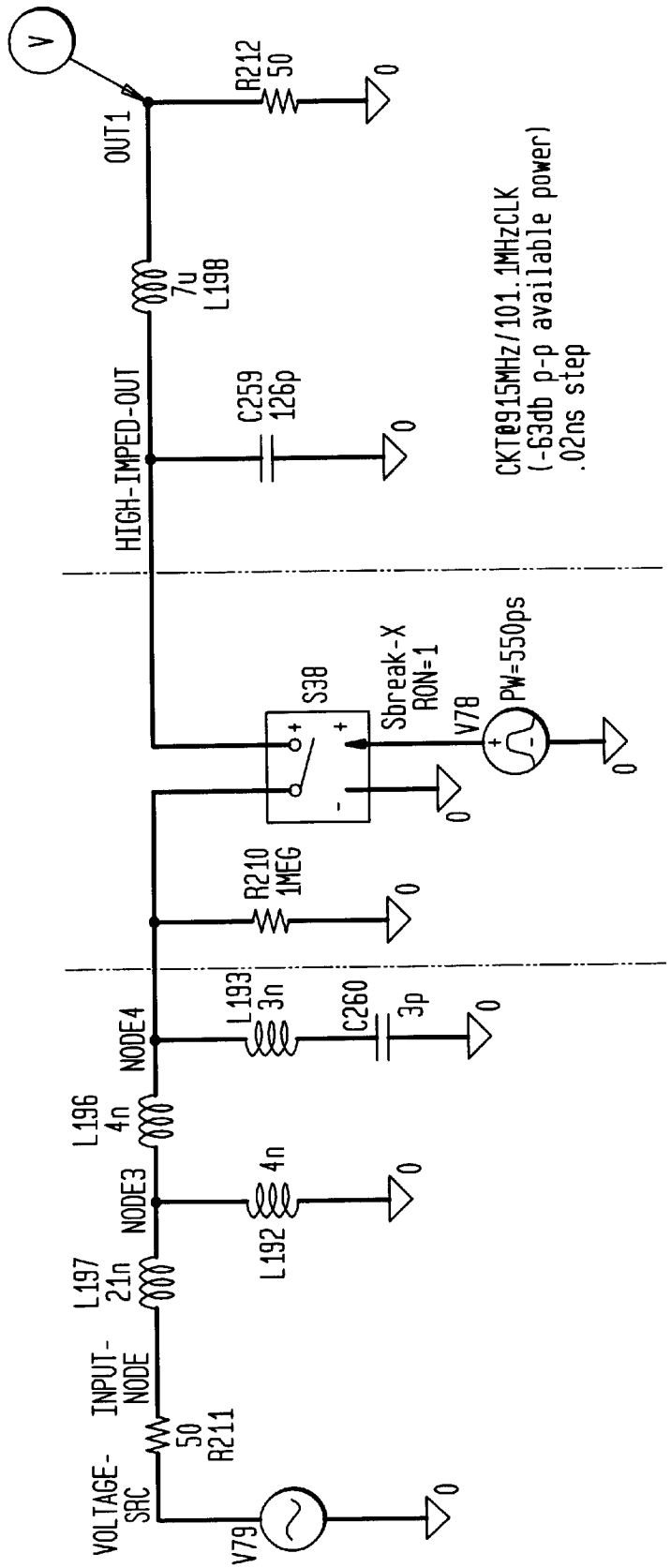
V
OUT1
R212
50
0
L198
7u
HIGH-IMPED-OUT
C259
126p
0
CKT@915MHz/101.1MHzCLK
(-63db p-p available power)
.02ns step
S38
Sbreak-X
RON=1
V78
PW=550ps
0
0
R210
1MEG
0
NODE4
L193
3n
C260
3p
0
L196
4n
NODE3
L192
4n
0
L197
21n
INPUT-
NODE
R211
50
VOLTAGE-
SRC
V79
0

FIG. 66

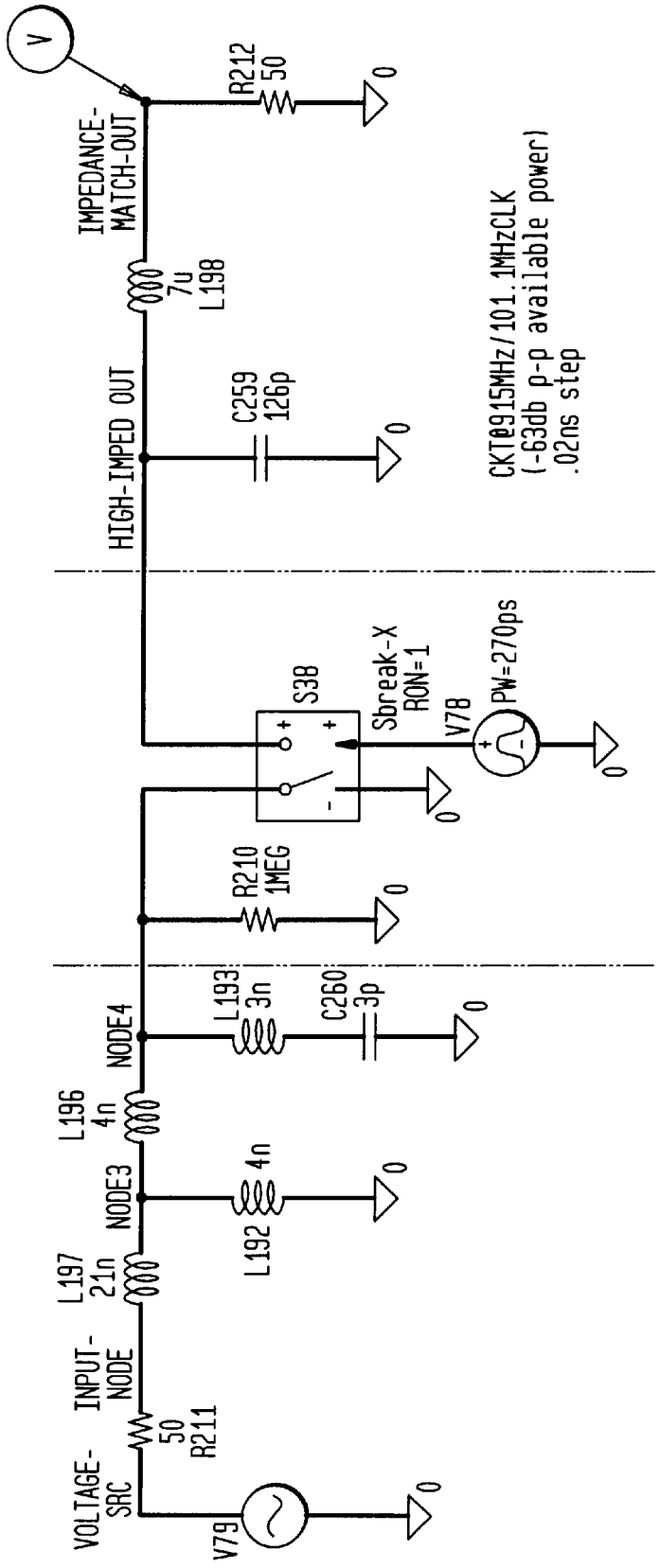
V
IMPEDANCE-
MATCH-OUT
R212
50
0
7u
L198
HIGH-IMPED OUT
C259
126p
0
CKT@915MHz/101.1MHzCLK
(-63db p-p available power)
.02ns step
S38
Sbreak-X
RON=1
V78
PW=270ps
0
0
R210
1MEG
0
NODE4
L193
3n
C260
3p
0
L196
4n
NODE3
4n
L192
0
L197
21n
INPUT-
NODE
50
R211
VOLTAGE-
SRC
V79
0

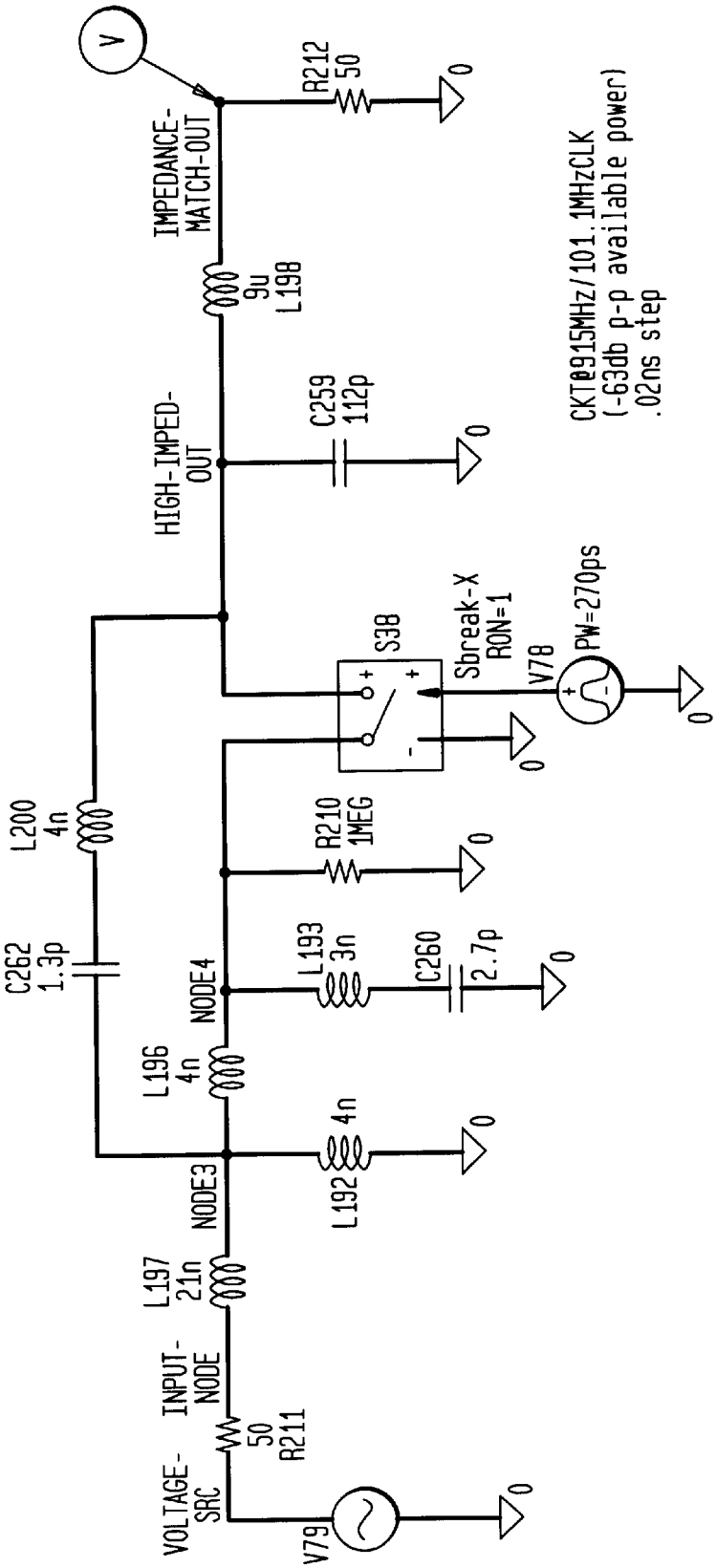
V
IMPEDANCE-
MATCH-OUT
R212
50
0
9u
L198
HIGH-IMPED-
OUT
C259
112p
0
CKT@915MHz/101.1MHzCLK
(-63db p-p available power)
.02ns step
S38
Sbreak-X
RON=1
V78
PW=270ps
0
0
L200
4n
R210
1MEG
0
C262
1.3p
NODE4
L193
3n
C260
2.7p
0
L196
4n
4n
0
NODE3
L192
L197
21n
INPUT-
NODE
50
R211
VOLTAGE-
SRC
V79
0

FIG. 67

FIG. 68

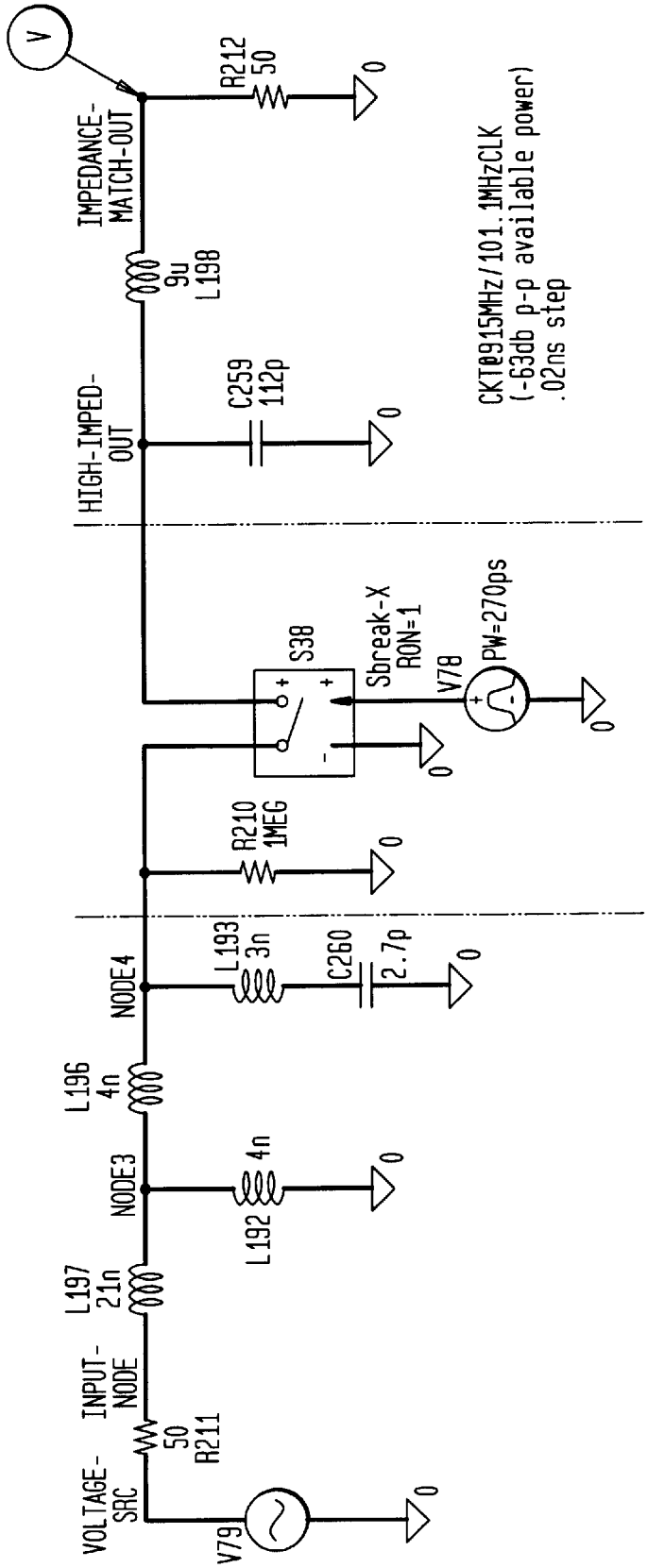
V
IMPEDANCE-
MATCH-OUT
R212
50
0
9u
L198
HIGH-IMPED-
OUT
C259
112p
0
CKT@915MHz/101.1MHzCLK
(-63db p-p available power)
.02ns step
S38
Sbreak-X
RON=1
V78
PW=270ps
0
0
R210
1MEG
0
NODE4
L193
3n
C260
2.7p
0
L196
4n
NODE3
4n
L192
0
L197
21n
INPUT-
NODE
50
R211
VOLTAGE-
SRC
V79
0

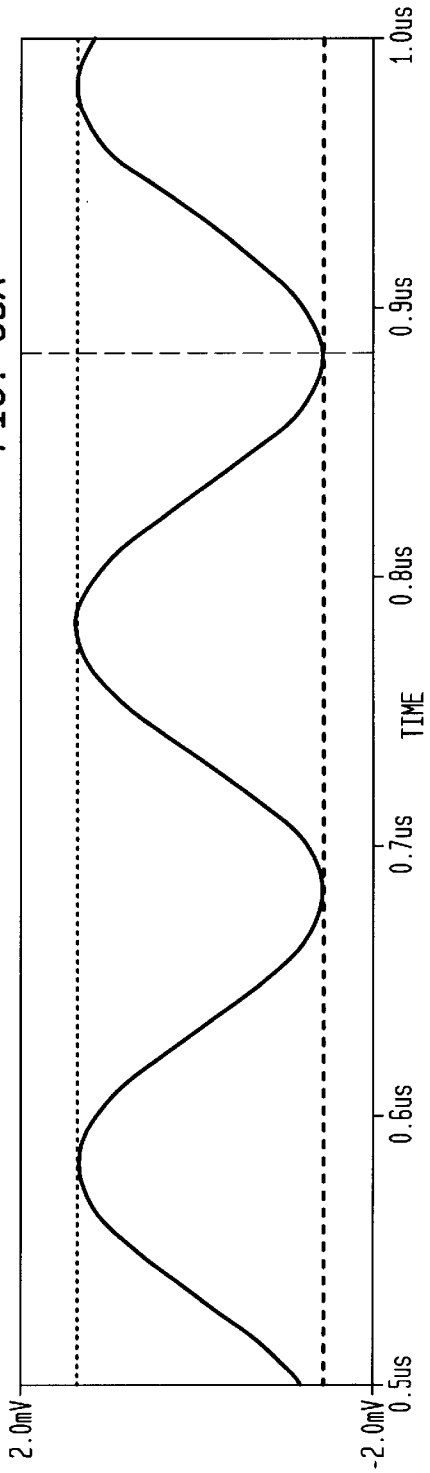

FIG. 69A

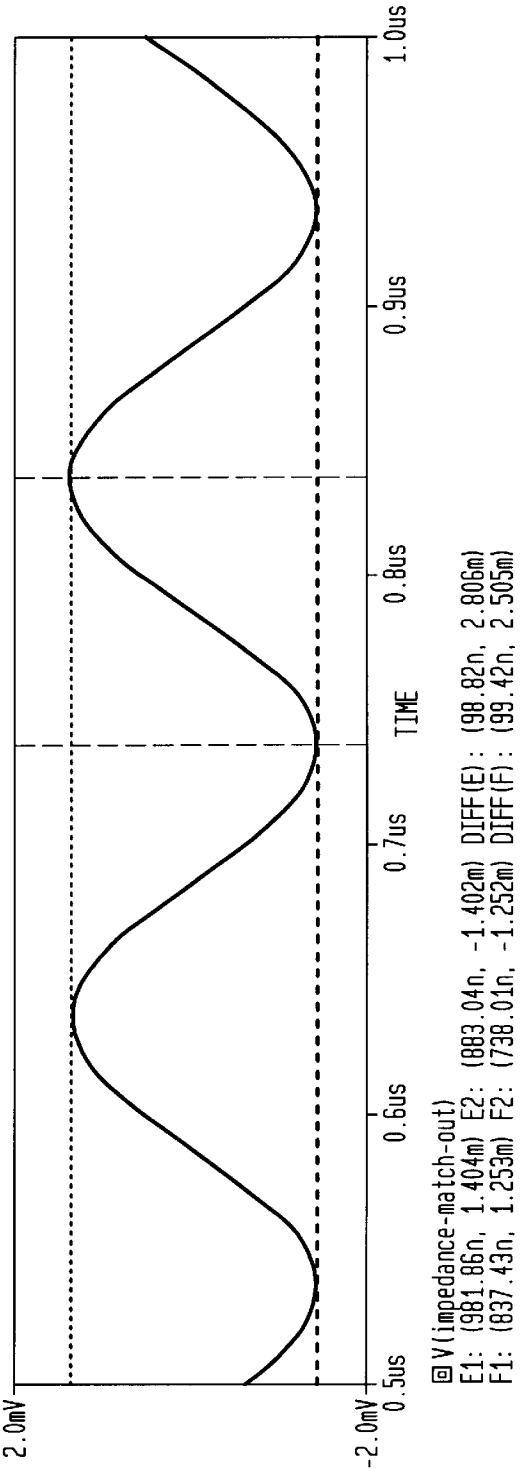

FIG. 69B

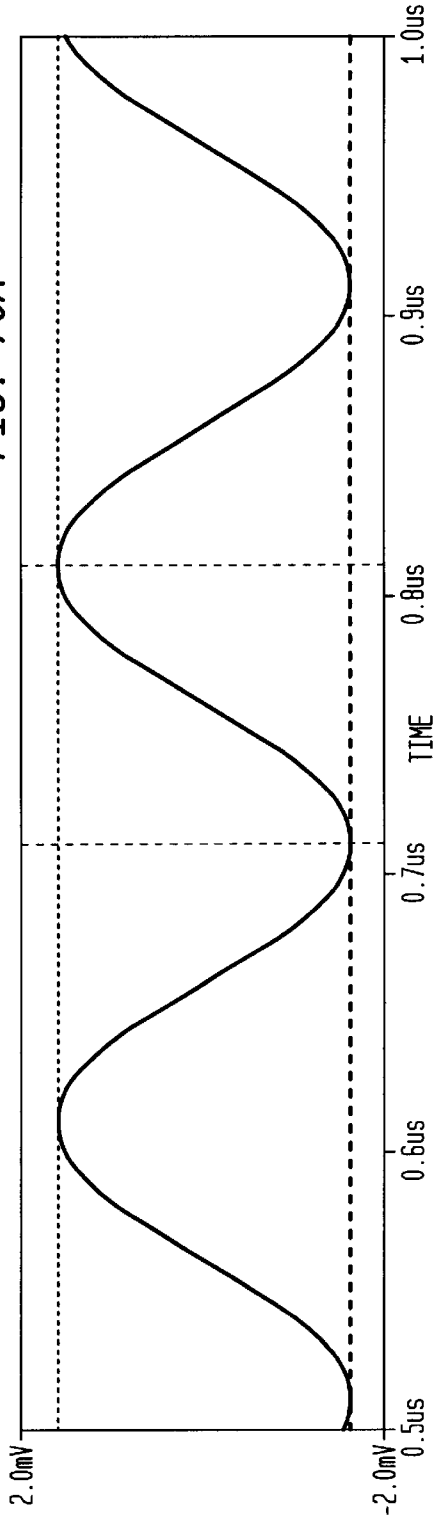

FIG. 70A

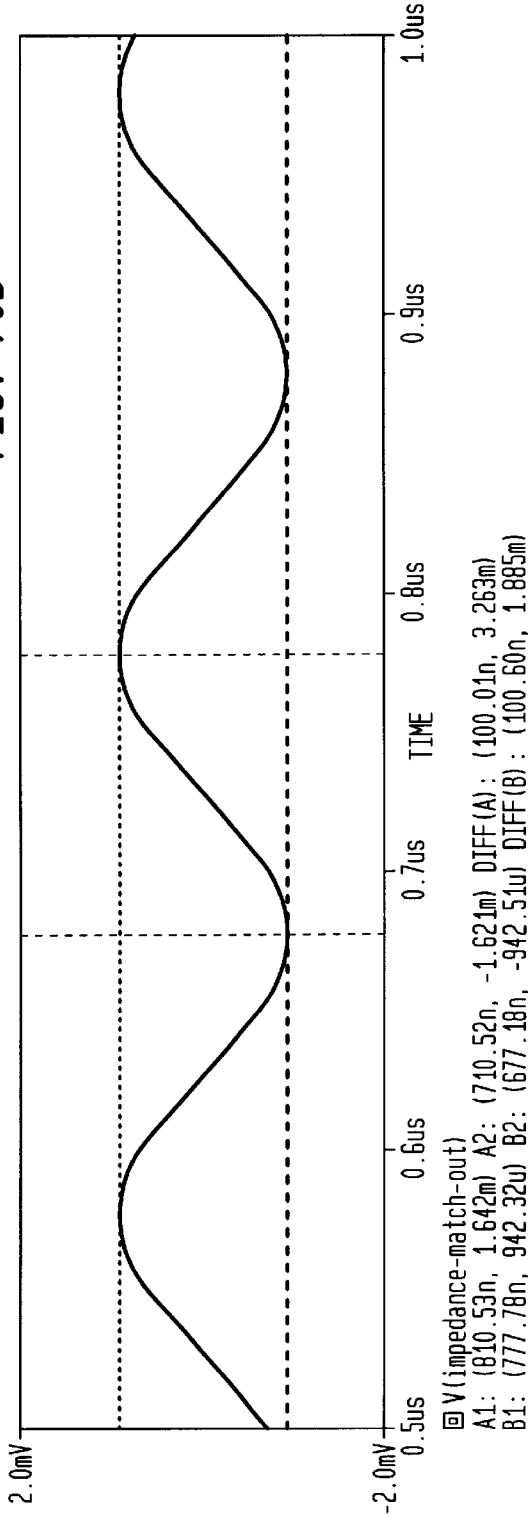

FIG. 70B

FIG. 71A

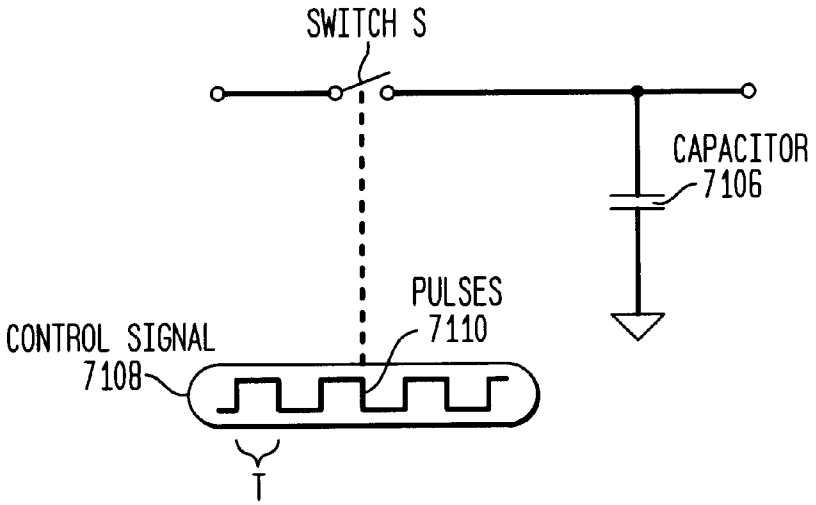

FIG. 71B

$$q = C \cdot V \qquad \text{EQ. 10}$$

$$V = A \cdot \sin(t) \qquad \text{EQ. 11}$$

$$q(t) = C \cdot A \cdot \sin(t) \qquad \text{EQ. 12}$$

$$\Delta q(t) = C \cdot A \cdot \sin(t) - C \cdot A \cdot \sin(t-T) \qquad \text{EQ. 13}$$

$$\Delta q(t) = C \cdot A \cdot (\sin(t) - \sin(t-T)) \qquad \text{EQ. 14}$$

$$\sin(\alpha) - \sin(\beta) = 2 \cdot \sin\left(\frac{\alpha-\beta}{2}\right) \cdot \cos\left(\frac{\alpha+\beta}{2}\right) \qquad \text{EQ. 15}$$

$$\Delta q(t) = 2 \cdot C \cdot A \cdot \sin\left[\frac{t-(t-T)}{2}\right] \cdot \cos\left[\frac{t+(t-T)}{2}\right] \qquad \text{EQ. 16}$$

$$\Delta q(t) = 2 \cdot C \cdot A \cdot \sin\left(\frac{1}{2} \cdot T\right) \cdot \cos\left(t - \frac{1}{2} \cdot T\right) \qquad \text{EQ. 17}$$

$$q(t) = \int_{\bullet}^{\bullet} C \cdot A \cdot (\sin(t) - \sin(t-T))\,dt \qquad \text{EQ. 18}$$

$$q(t) = -\cos(t) \cdot C \cdot A + \cos(t-T) \cdot C \cdot A \qquad \text{EQ. 19}$$

$$q(t) = C \cdot A \cdot (\cos(t-T) - \cos(t)) \qquad \text{EQ. 20}$$

FIG. 71C

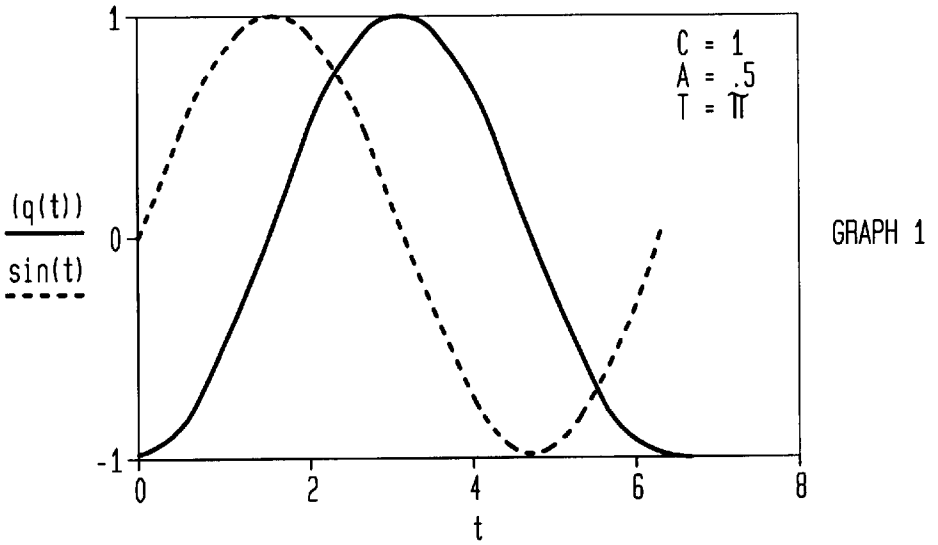

FIG. 71D

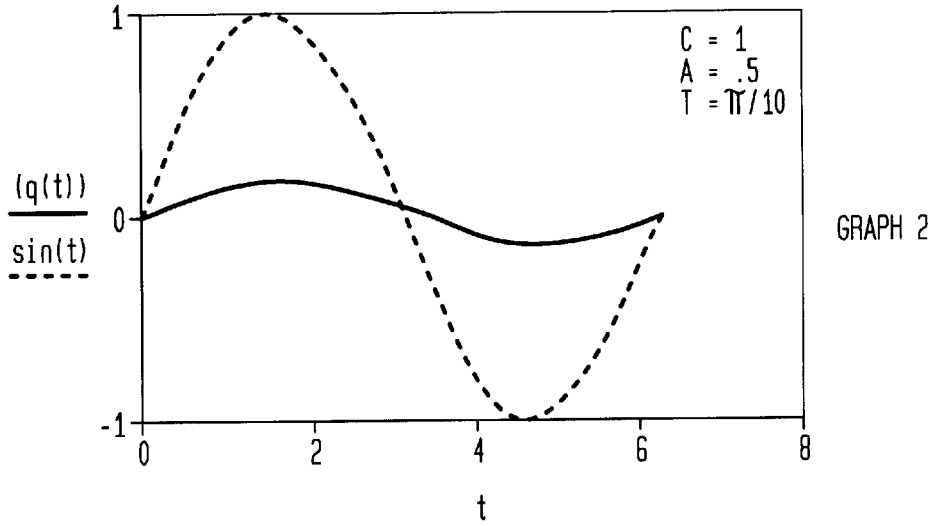

FIG. 71E

POWER-CHARGE RELATIONSHIP

$q=C\cdot V$	EQ. 21
$V=q/C$	EQ. 22
$V=J/q$	EQ. 23
$J=q^2/C$	EQ. 24
$P=J/S$	EQ. 25
$P=q^2/(C\cdot S)$	EQ. 26

FIG. 71F

INSERTION LOSS

INSERTION LOSS IN dB IS EXPRESSED BY:

$$ILdB=10\cdot\log\left(\frac{Pin}{Pout}\right) \quad \text{EQ. 27}$$

or

$$ILdB=10\cdot\log\left[\frac{\left(\frac{Vin^2}{Rin}\right)}{\left(\frac{Vout^2}{Rout}\right)}\right] \quad \text{EQ. 28}$$

FIG. 72

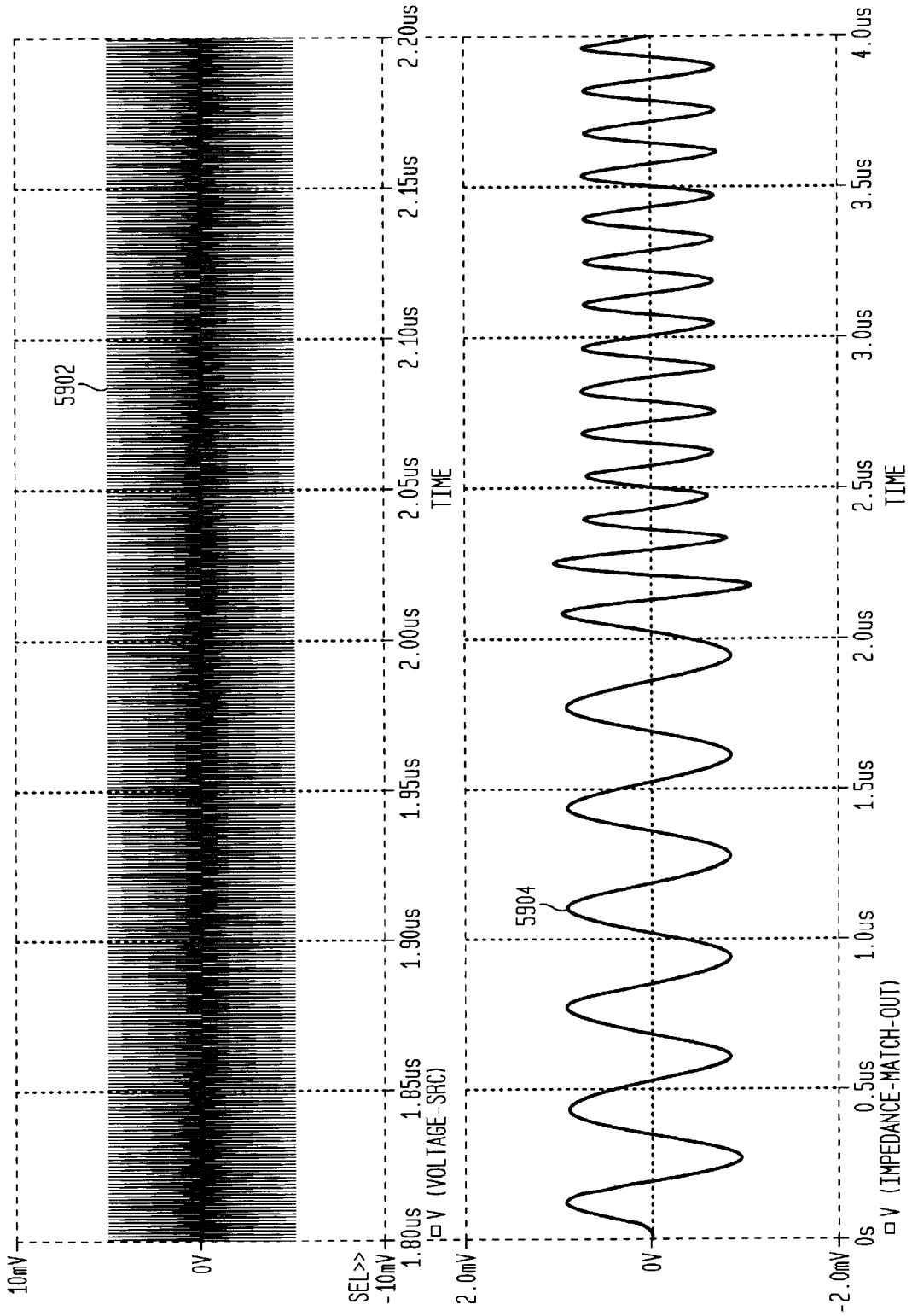
10mV
0V
SEL>>
-10mV
1.80us
1.85us
1.90us
1.95us
2.00us
2.05us
2.10us
2.15us
2.20us
TIME
V (VOLTAGE-SRC)
5902
2.0mV
0V
-2.0mV
0s
0.5us
1.0us
1.5us
2.0us
2.5us
3.0us
3.5us
4.0us
TIME
V (IMPEDANCE-MATCH-OUT)
5904

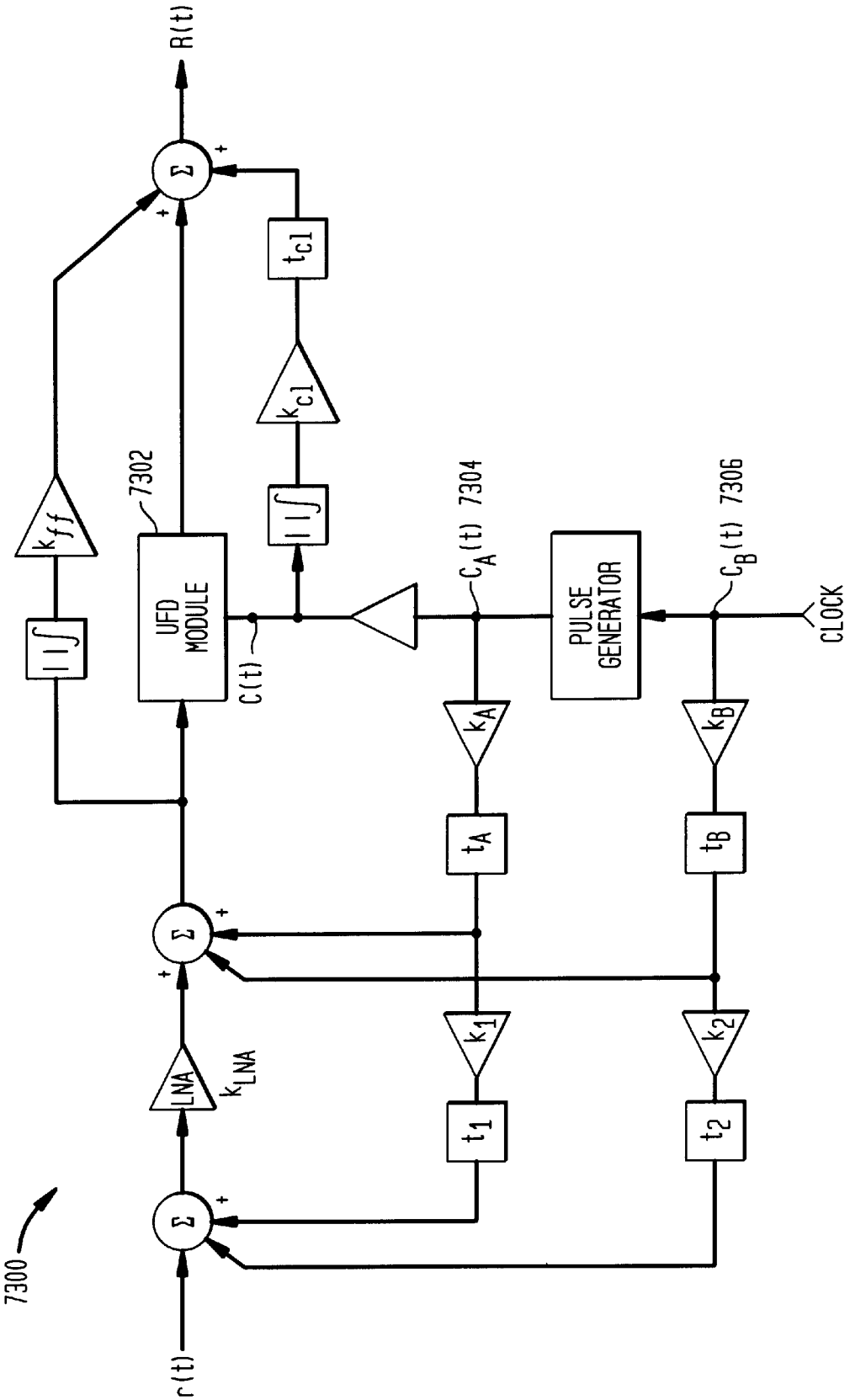
7300
r(t)
Σ
LNA
k_{LNA}
Σ
t_1
k_1
t_2
k_2
t_A
k_A
t_B
k_B
k_{ff}
7302
UFD MODULE
C(t)
t_{c1}
k_{c1}
$C_A(t)$ 7304
PULSE GENERATOR
$C_B(t)$ 7306
CLOCK
Σ
R(t)

FIG. 73

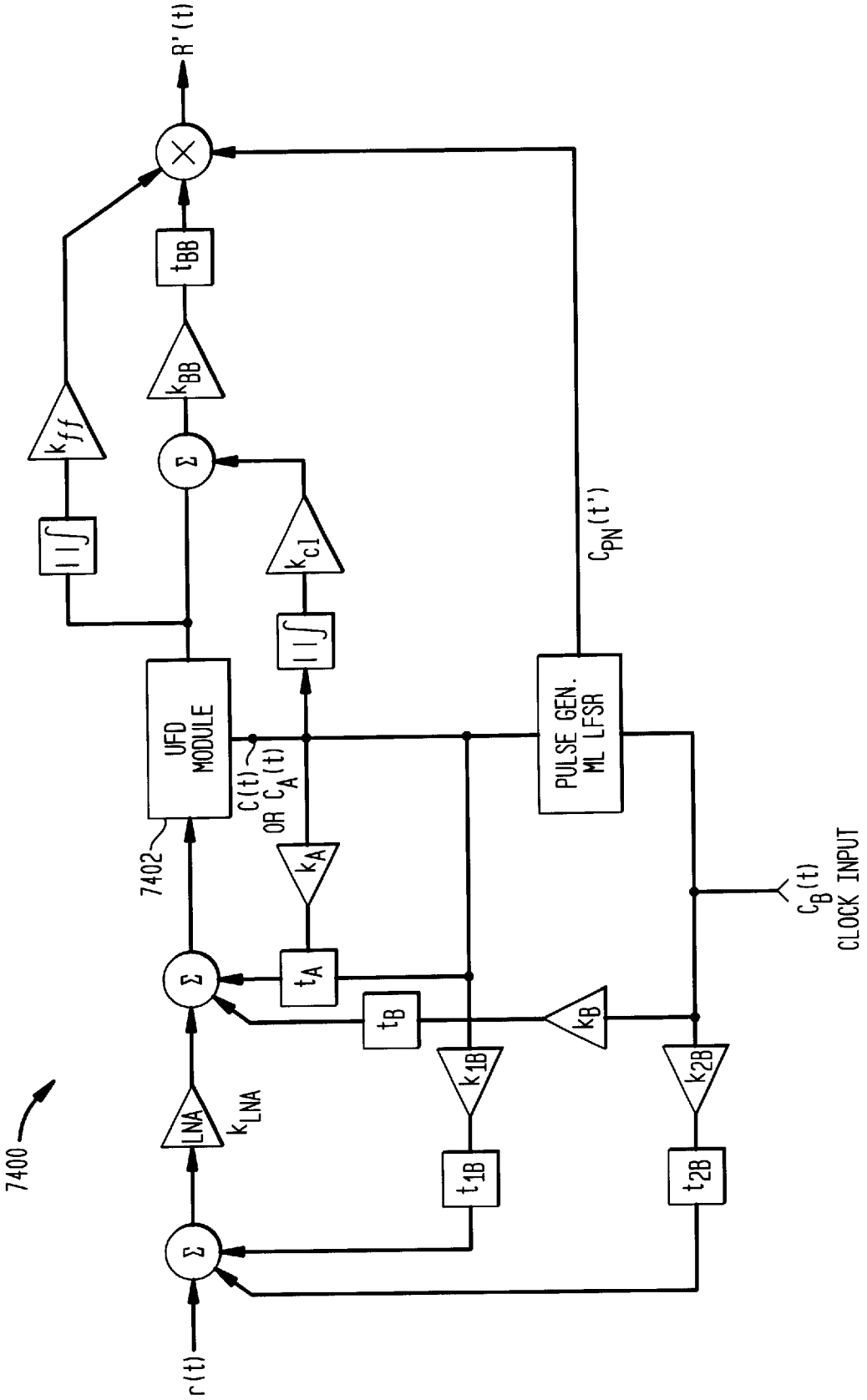
7400
r(t)
Σ
LNA
k_{LNA}
Σ
t_A
t_B
k_A
7402
UFD MODULE
C(t) OR $C_A(t)$
k_{c1}
Σ
k_{BB}
t_{BB}
k_{ff}
k_{1B}
t_{1B}
k_B
k_{2B}
t_{2B}
PULSE GEN. ML LFSR
$C_{PN}(t')$
$C_B(t)$ CLOCK INPUT
R'(t)

FIG. 74

FIG. 75

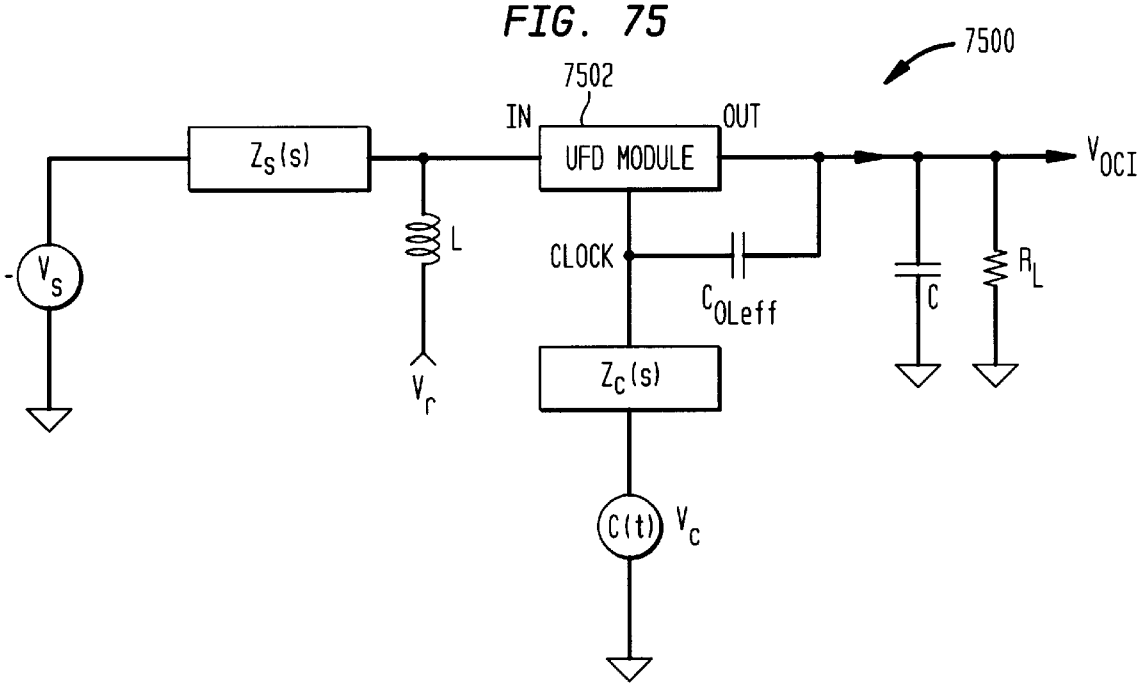
7500
7502
IN
OUT
UFD MODULE
$Z_S(s)$
V_{OCI}
L
CLOCK
C_{OLeff}
C
R_L
V_S
V_r
$Z_C(s)$
C(t)
V_c

FIG. 76

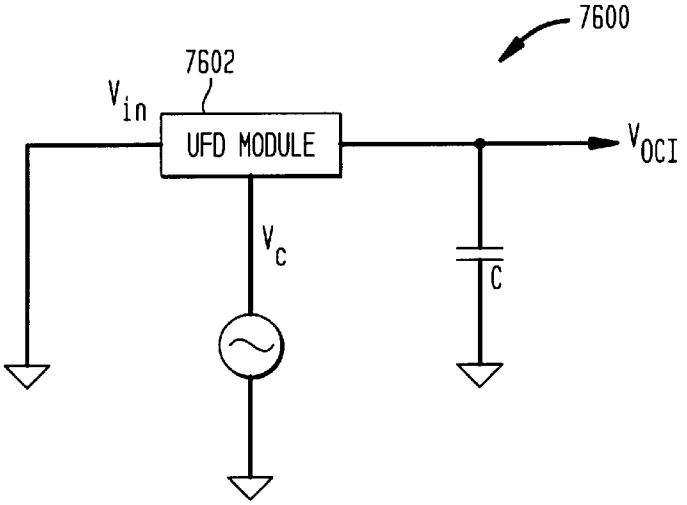
7600
7602
V_{in}
UFD MODULE
V_{OCI}
V_c
C

FIG. 77A

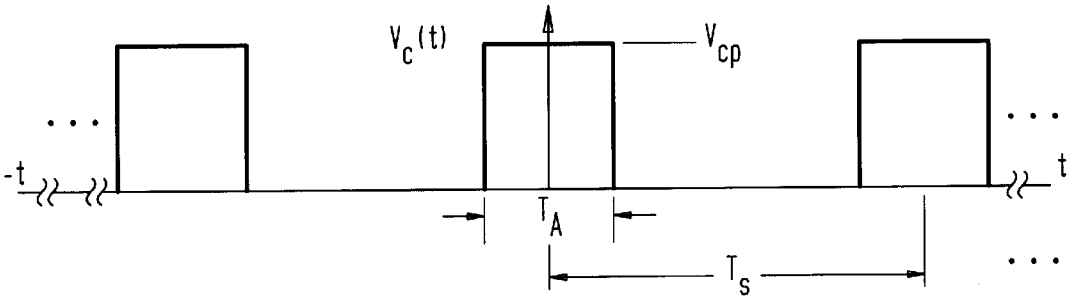

FIG. 77B

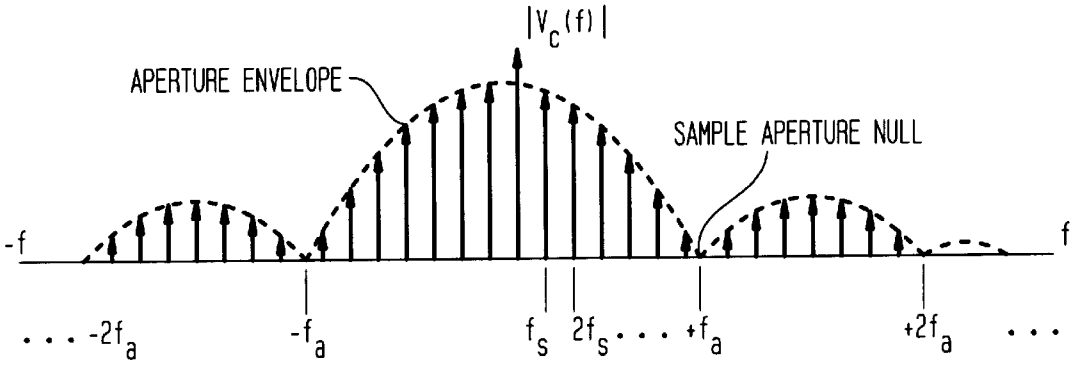

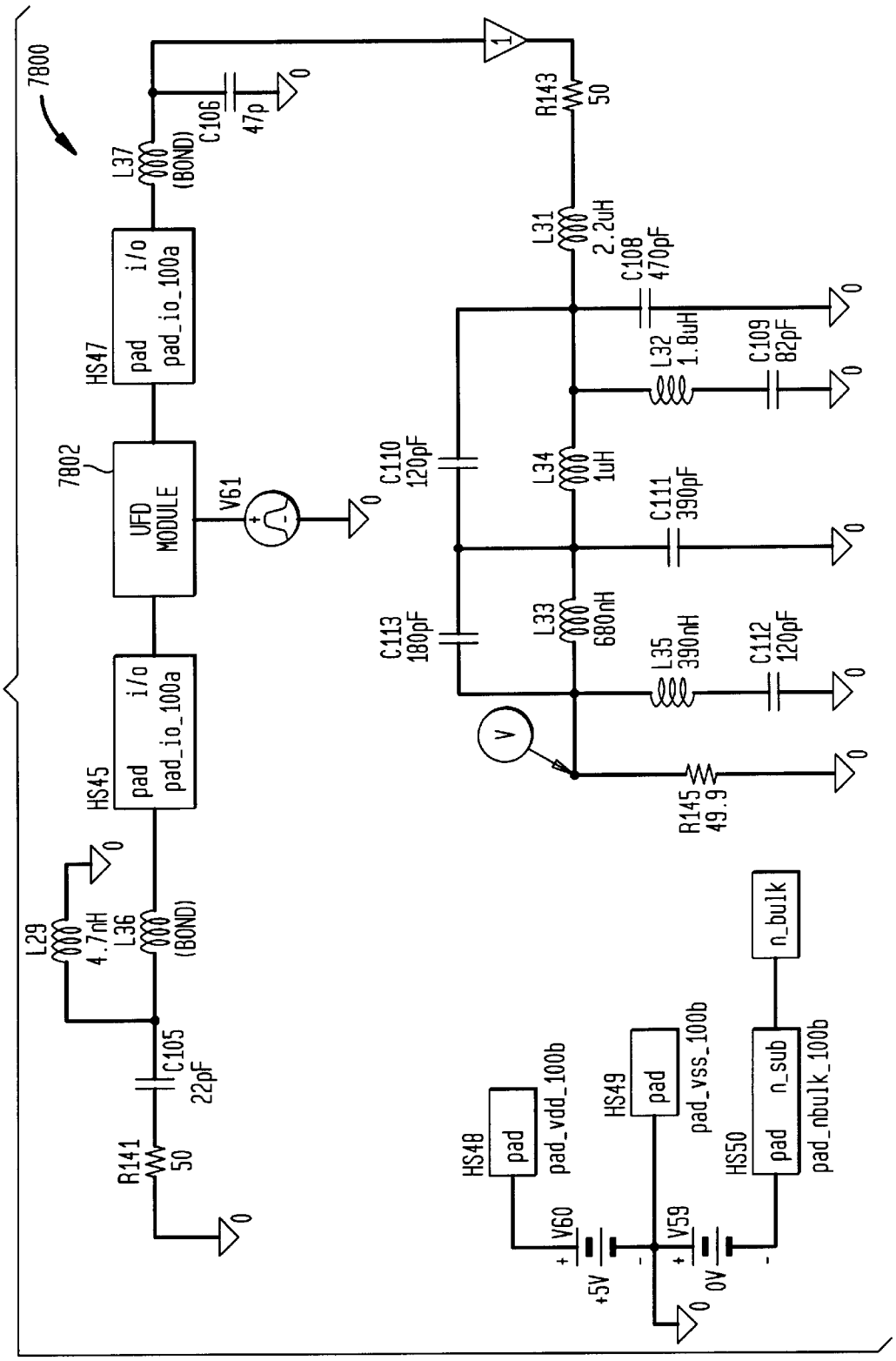
7800
L37
(BOND)
C106
47p
R143
50
HS47
pad
i/o
pad_io_100a
L31
2.2uH
C108
470pF
L32
1.8uH
C109
82pF
7802
UFD
MODULE
V61
C110
120pF
L34
1uH
C111
390pF
C113
180pF
L33
680nH
L35
390nH
C112
120pF
HS45
pad
i/o
pad_io_100a
R145
49.9
L29
4.7nH
L36
(BOND)
C105
22pF
R141
50
HS48
pad
pad_vdd_100b
V60
+5V
HS49
pad
pad_vss_100b
V59
0V
HS50
pad
n_sub
pad_nbulk_100b
n_bulk

FIG. 78

FIG. 79

OUTPUT OFFSET DUE TO CHARGE INJECTION / CLK FEEDTHROUGH FOR VARIOUS PULSE WIDTHS

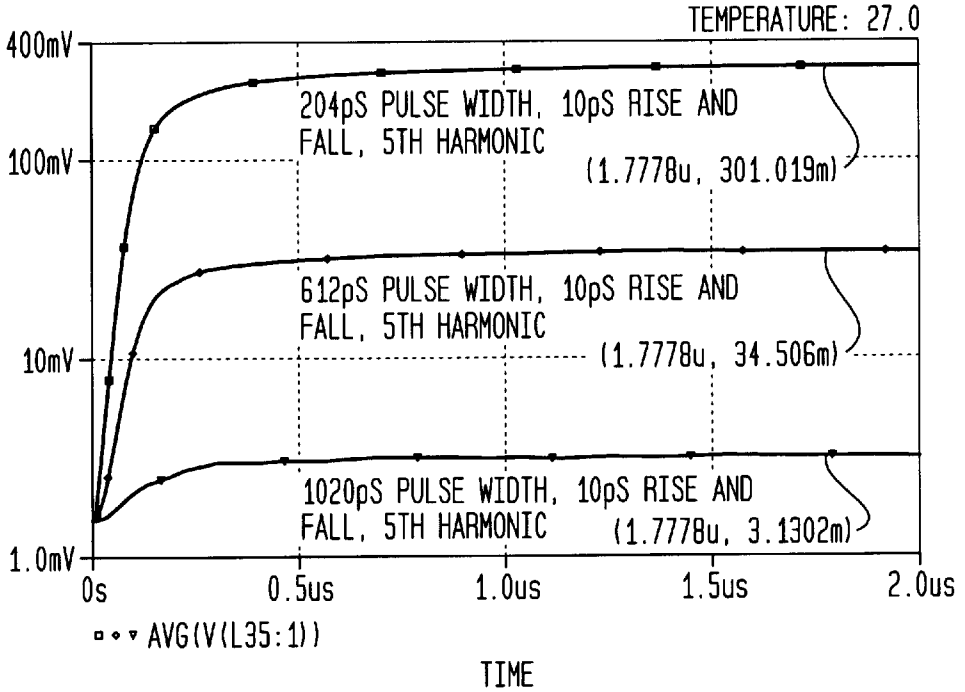

FIG. 80

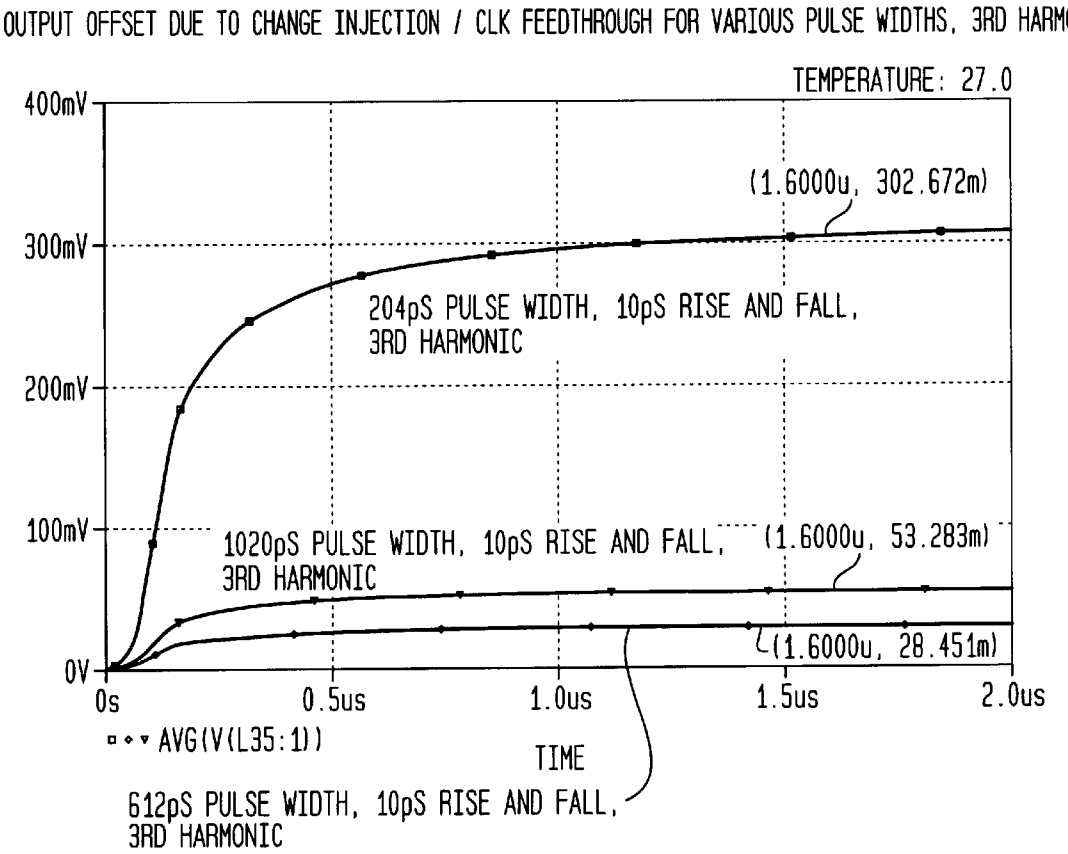
OUTPUT OFFSET DUE TO CHANGE INJECTION / CLK FEEDTHROUGH FOR VARIOUS PULSE WIDTHS, 3RD HARMONIC
TEMPERATURE: 27.0
400mV
300mV
200mV
100mV
0V
0s
0.5us
1.0us
1.5us
2.0us
(1.6000u, 302.672m)
204pS PULSE WIDTH, 10pS RISE AND FALL, 3RD HARMONIC
1020pS PULSE WIDTH, 10pS RISE AND FALL, 3RD HARMONIC
(1.6000u, 53.283m)
(1.6000u, 28.451m)
AVG(V(L35:1))
TIME
612pS PULSE WIDTH, 10pS RISE AND FALL, 3RD HARMONIC

FIG. 81

REDUCED OUTPUT OFFSET BY REDUCTION IN BOND WIRE INDUCTANCE

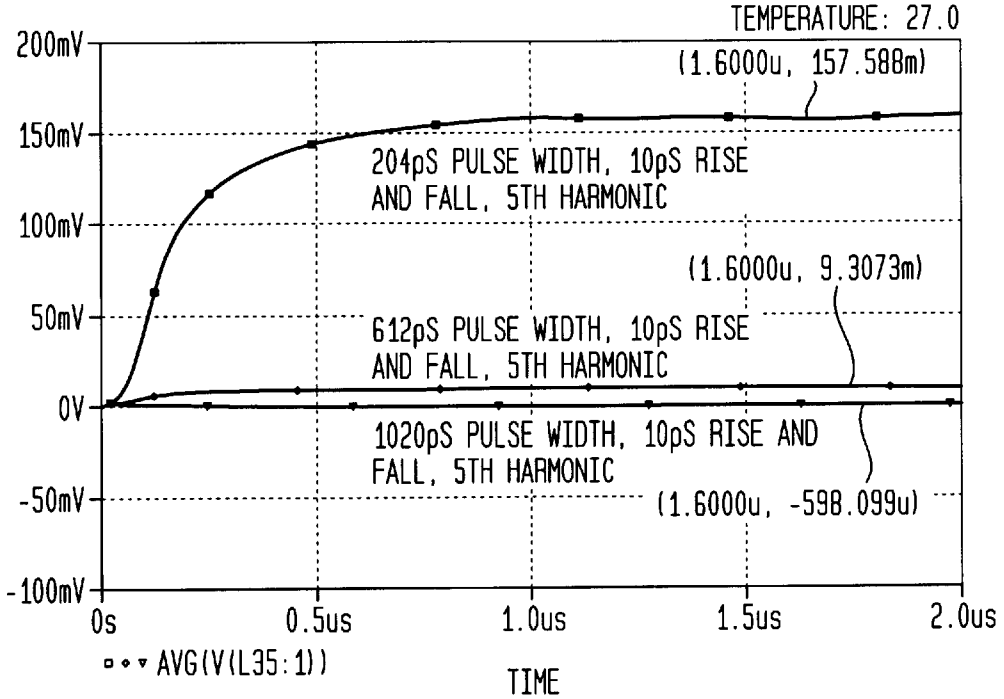

FIG. 82

EFFECT OF BONWIRE INDUCTANCE ON OUTPUT OFFSET FOR 204pS PW, 10pS RISE AND FALL, AND 5TH HARMONIC

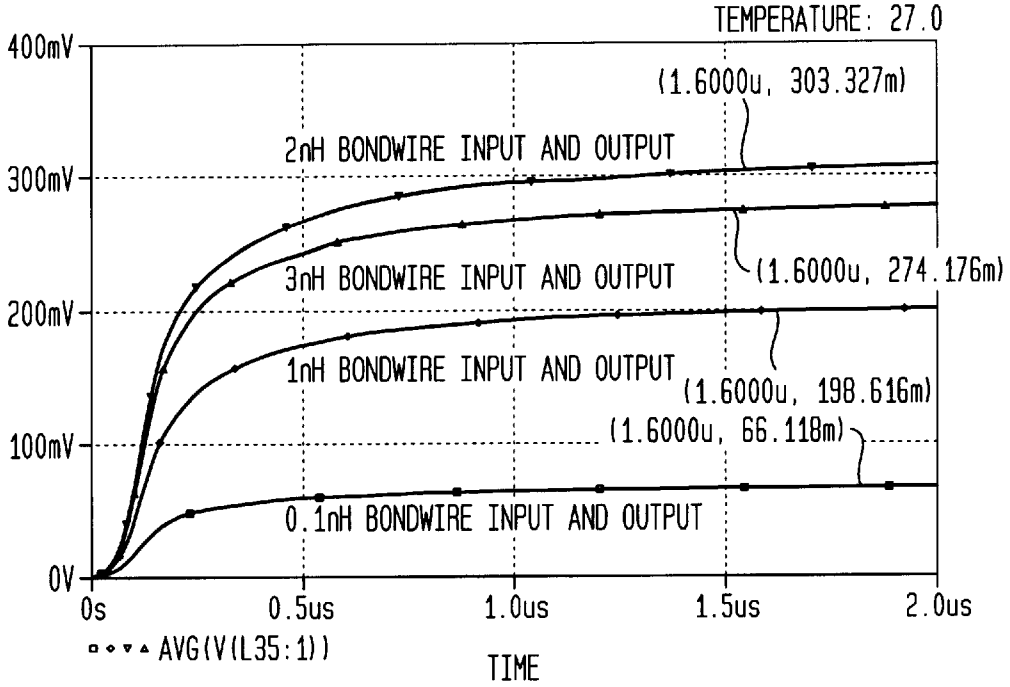

FIG. 83

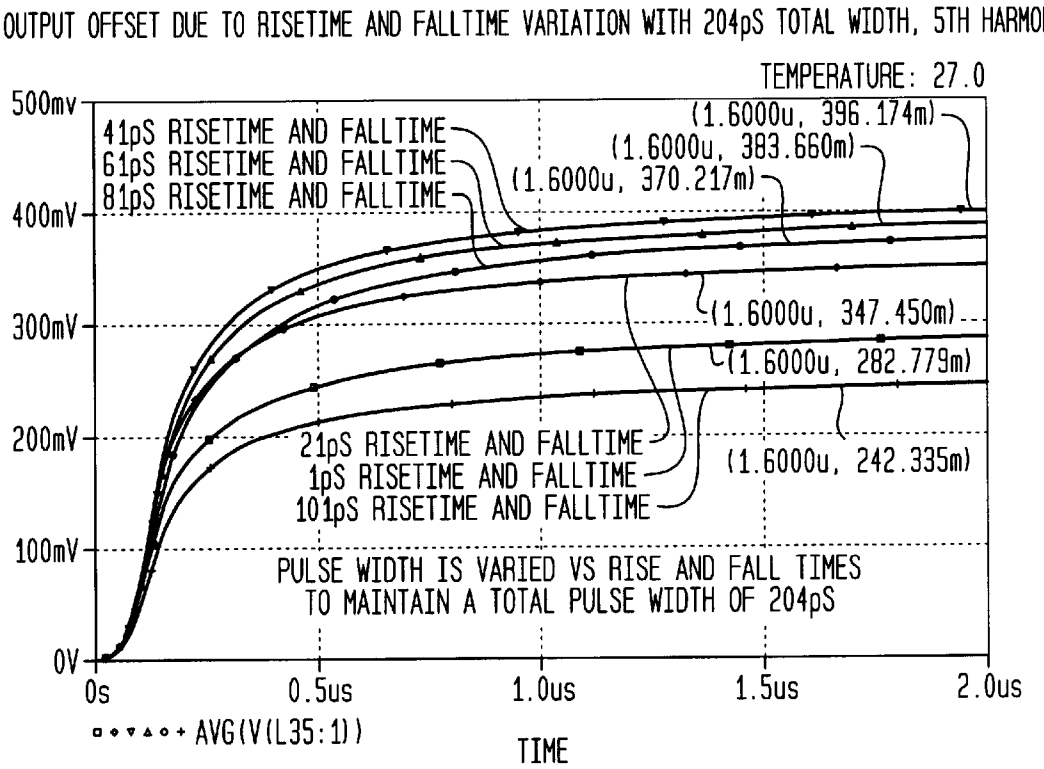
OUTPUT OFFSET DUE TO RISETIME AND FALLTIME VARIATION WITH 204pS TOTAL WIDTH, 5TH HARMONIC
TEMPERATURE: 27.0
500mv
400mV
300mV
200mV
100mV
0V
41pS RISETIME AND FALLTIME
61pS RISETIME AND FALLTIME
81pS RISETIME AND FALLTIME
(1.6000u, 396.174m)
(1.6000u, 383.660m)
(1.6000u, 370.217m)
(1.6000u, 347.450m)
(1.6000u, 282.779m)
(1.6000u, 242.335m)
21pS RISETIME AND FALLTIME
1pS RISETIME AND FALLTIME
101pS RISETIME AND FALLTIME
PULSE WIDTH IS VARIED VS RISE AND FALL TIMES
TO MAINTAIN A TOTAL PULSE WIDTH OF 204pS
0s
0.5us
1.0us
1.5us
2.0us
AVG(V(L35:1))
TIME

FIG. 84A

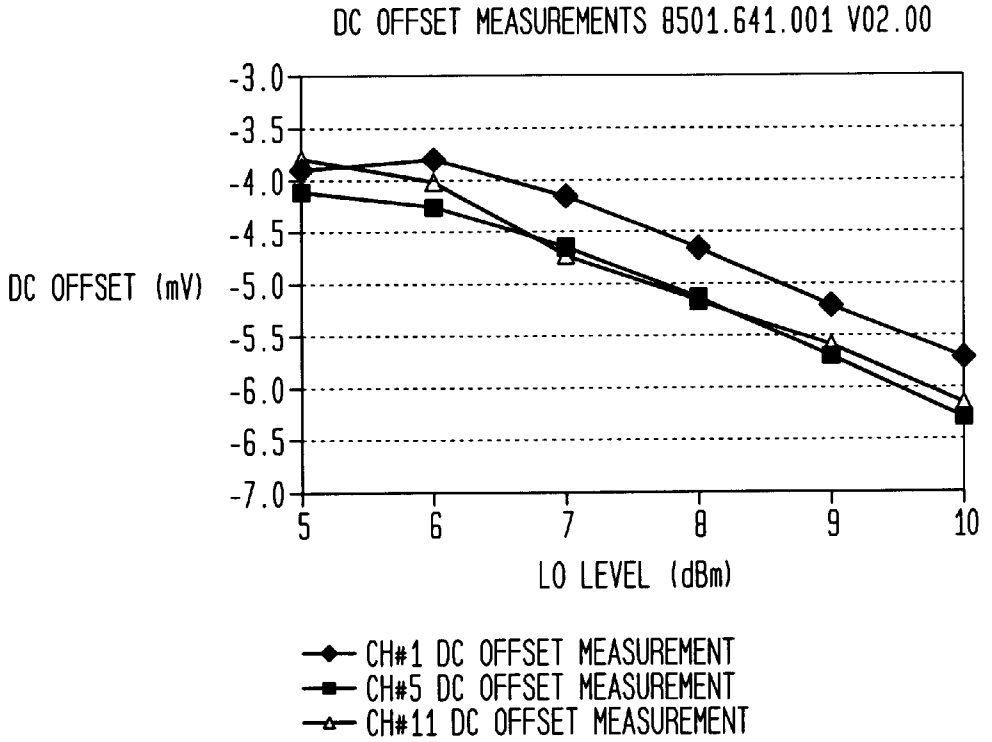

FIG. 84B

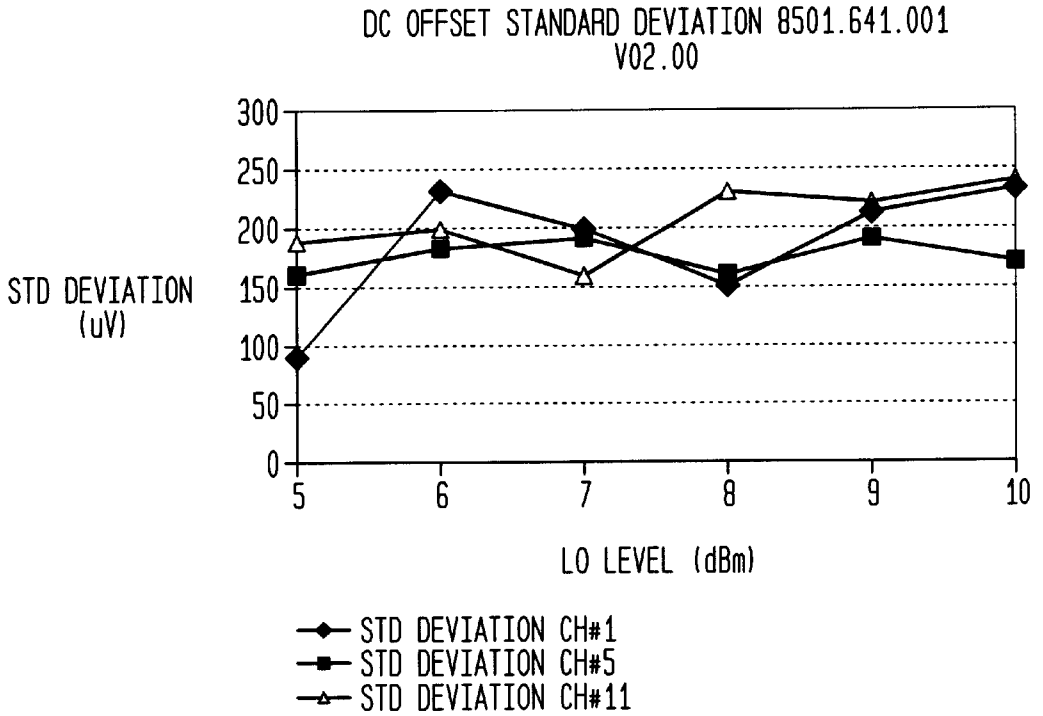

FIG. 85A

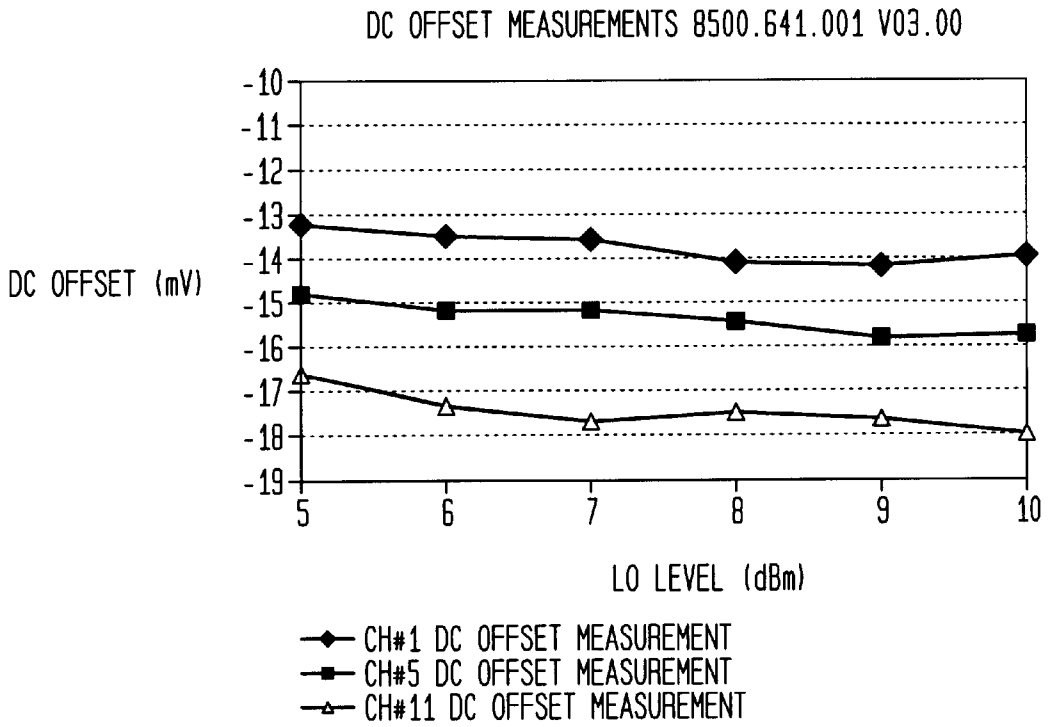

FIG. 85B

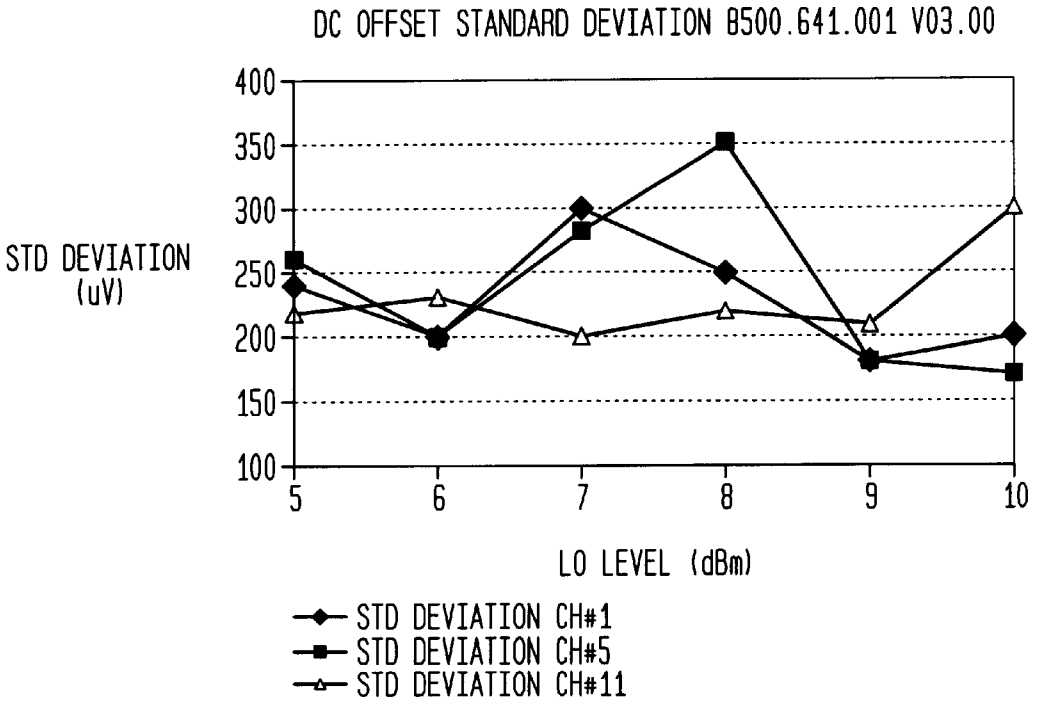

FIG. 86A

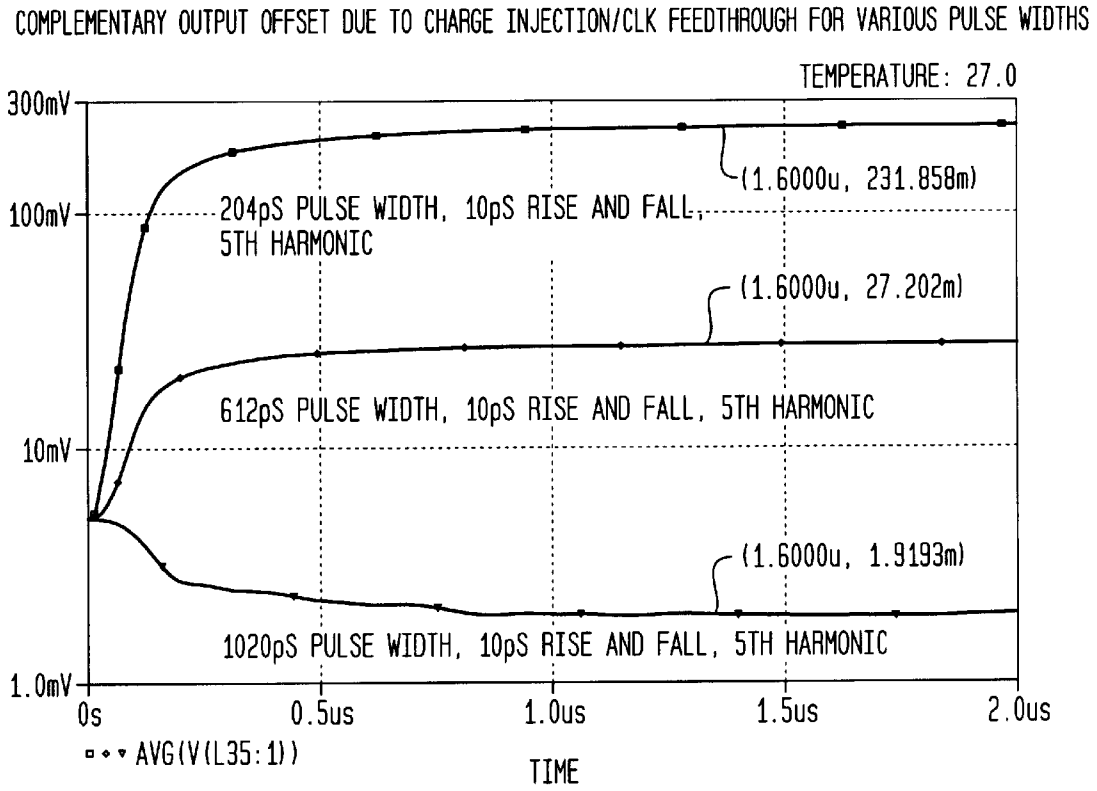
COMPLEMENTARY OUTPUT OFFSET DUE TO CHARGE INJECTION/CLK FEEDTHROUGH FOR VARIOUS PULSE WIDTHS
TEMPERATURE: 27.0
300mV
100mV
10mV
1.0mV
(1.6000u, 231.858m)
204pS PULSE WIDTH, 10pS RISE AND FALL, 5TH HARMONIC
(1.6000u, 27.202m)
612pS PULSE WIDTH, 10pS RISE AND FALL, 5TH HARMONIC
(1.6000u, 1.9193m)
1020pS PULSE WIDTH, 10pS RISE AND FALL, 5TH HARMONIC
0s
0.5us
1.0us
1.5us
2.0us
AVG(V(L35:1))
TIME

FIG. 86B

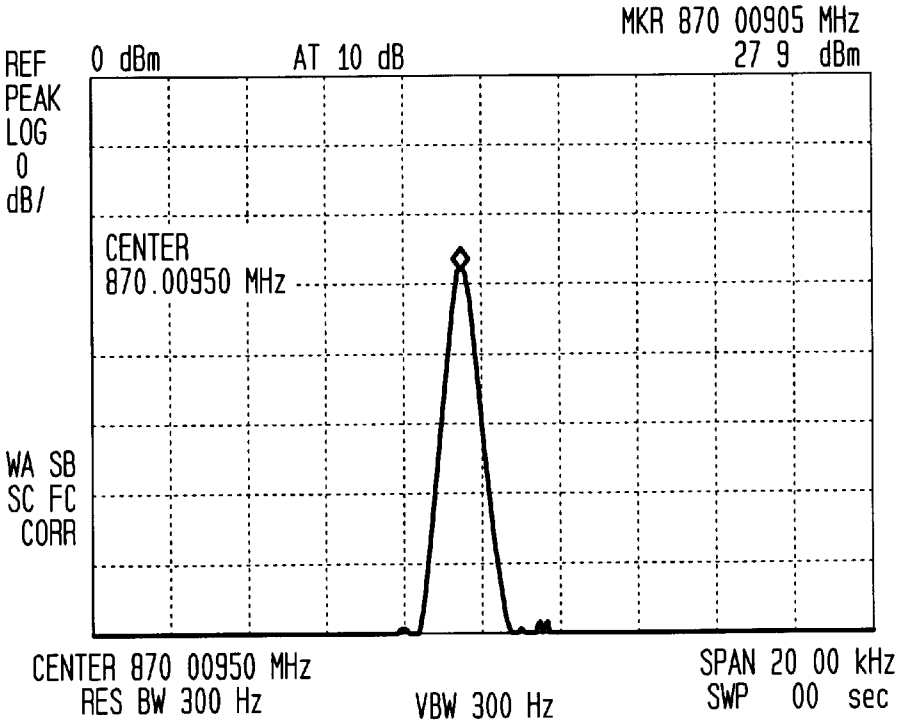

FIG. 86C

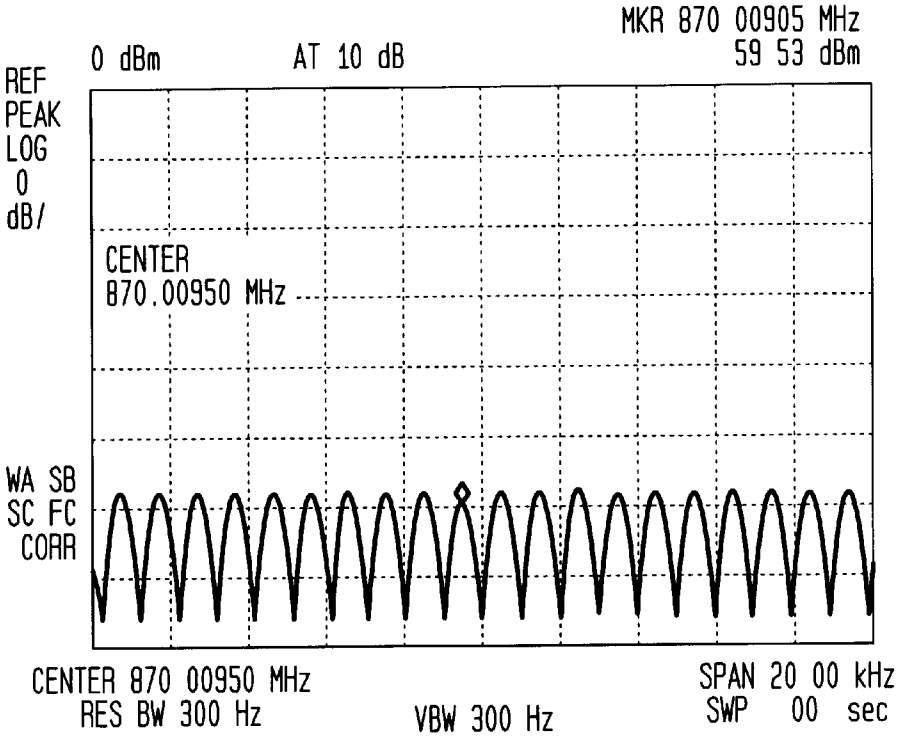

FIG. 86D

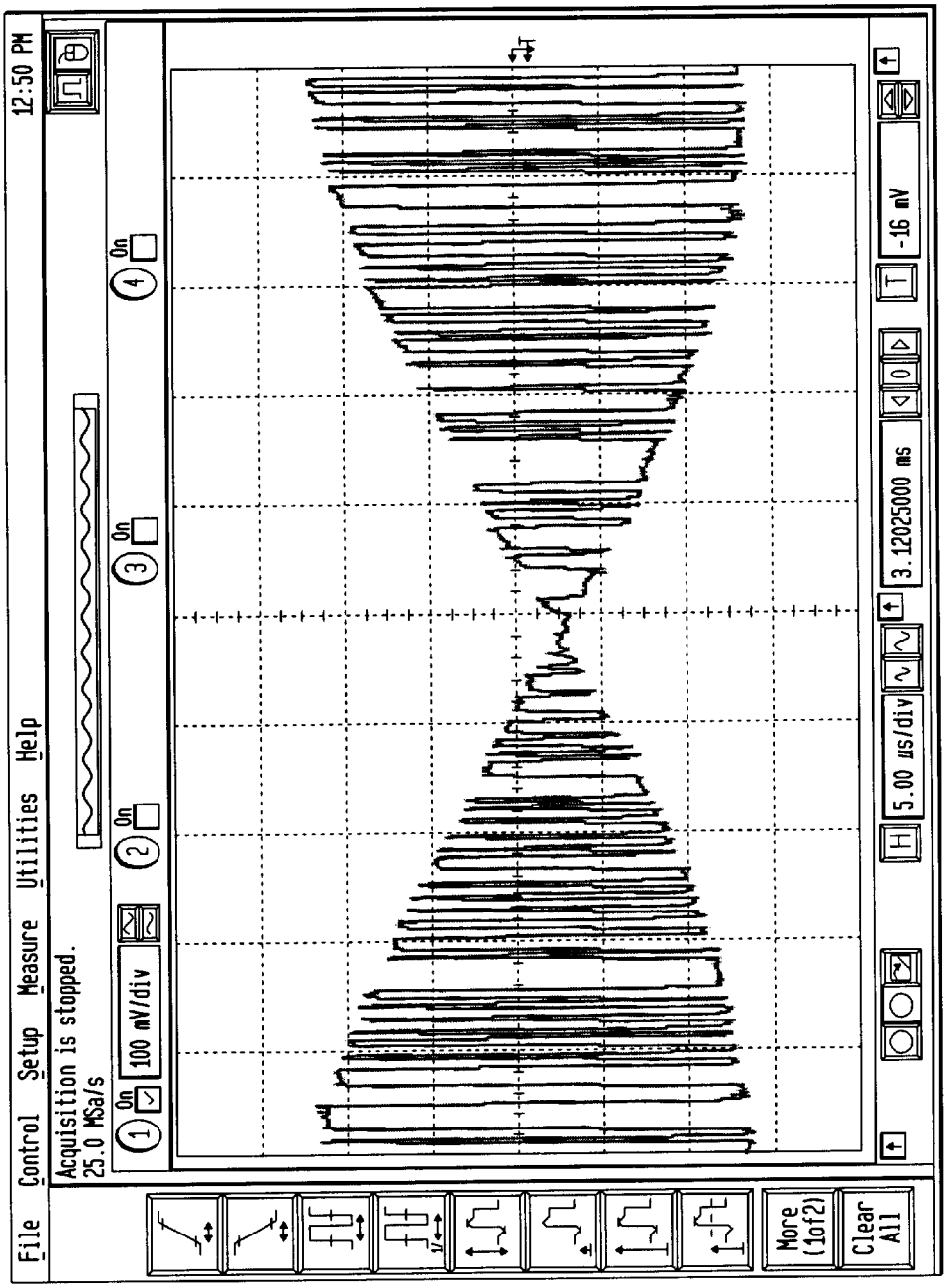
File
Control
Setup
Measure
Utilities
Help
12:50 PM
Acquisition is stopped.
25.0 MSa/s
1
On
100 mV/div
2
On
3
On
4
On
5.00 µs/div
3.12025000 ms
-16 mV
More (1of2)
Clear All

FIG. 86E

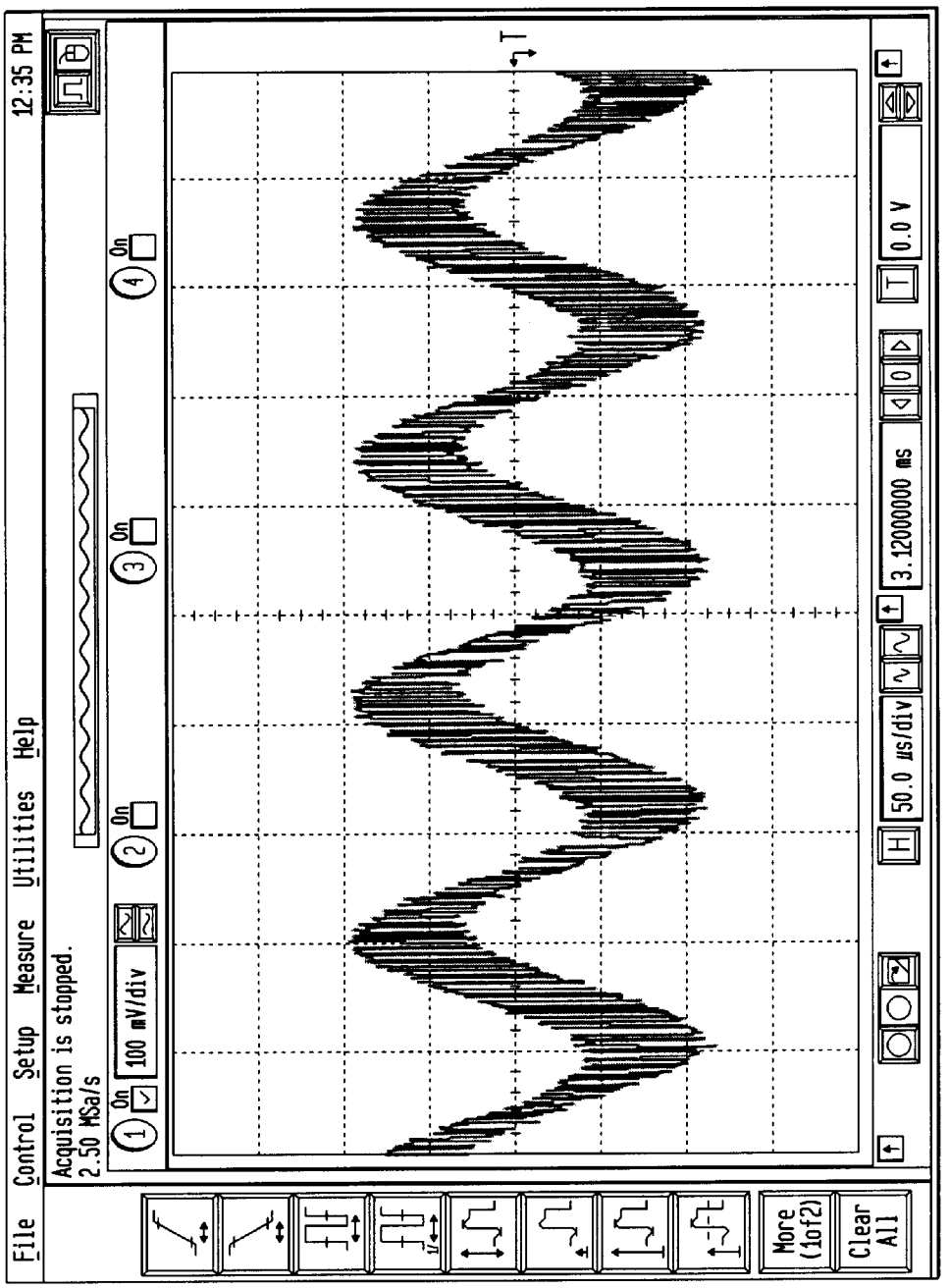
File Control Setup Measure Utilities Help
12:35 PM
Acquisition is stopped.
2.50 MSa/s
1 On
100 mV/div
2 On
3 On
4 On
T
H
50.0 µs/div
3.12000000 ms
0.0 V
More (1of2)
Clear All

FIG. 86F

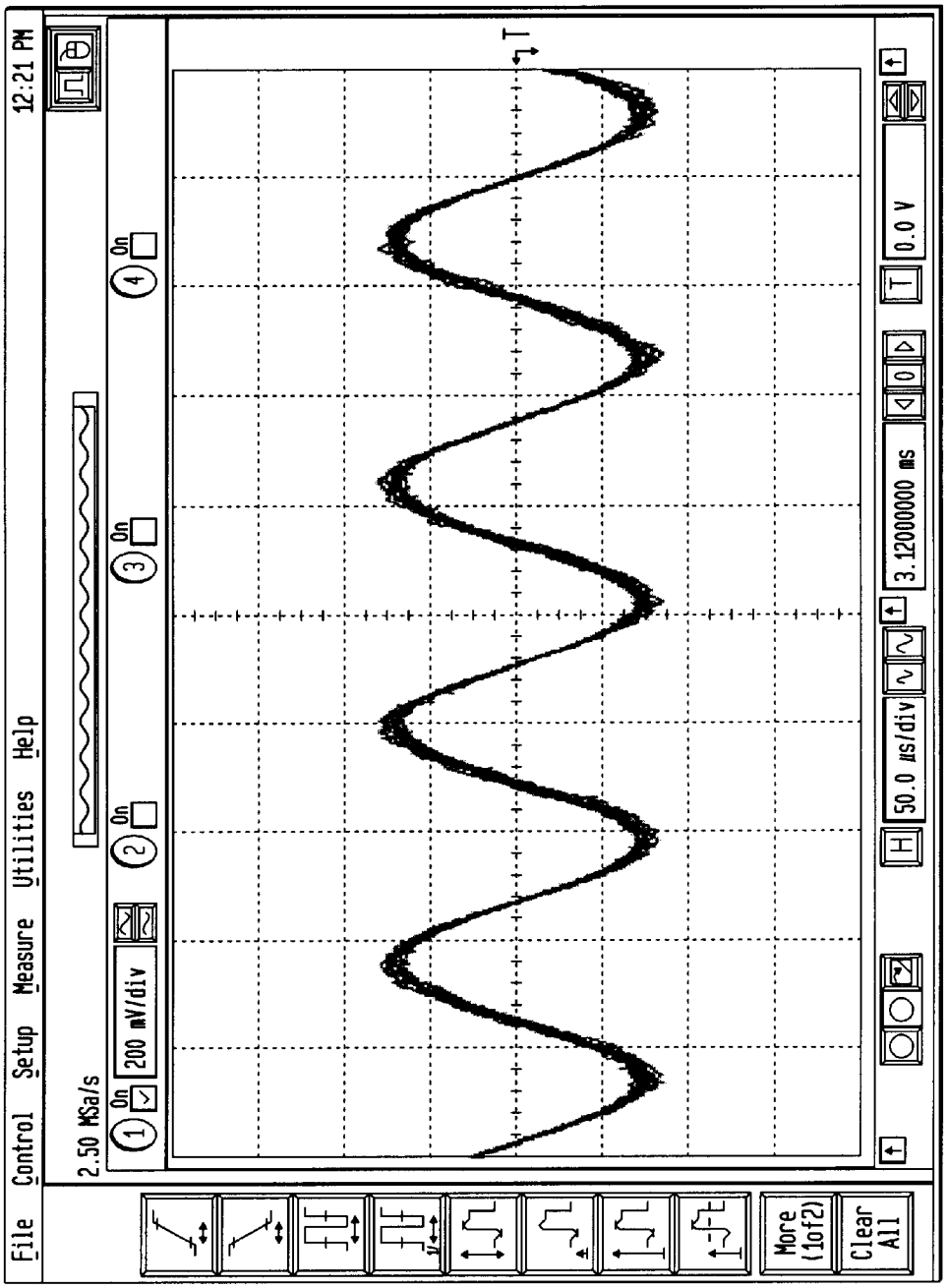
File Control Setup Measure Utilities Help
12:21 PM
2.50 MSa/s
On
200 mV/div
On
On
On
50.0 µs/div
3.12000000 ms
0.0 V
More (1of2)
Clear All

FIG. 86G

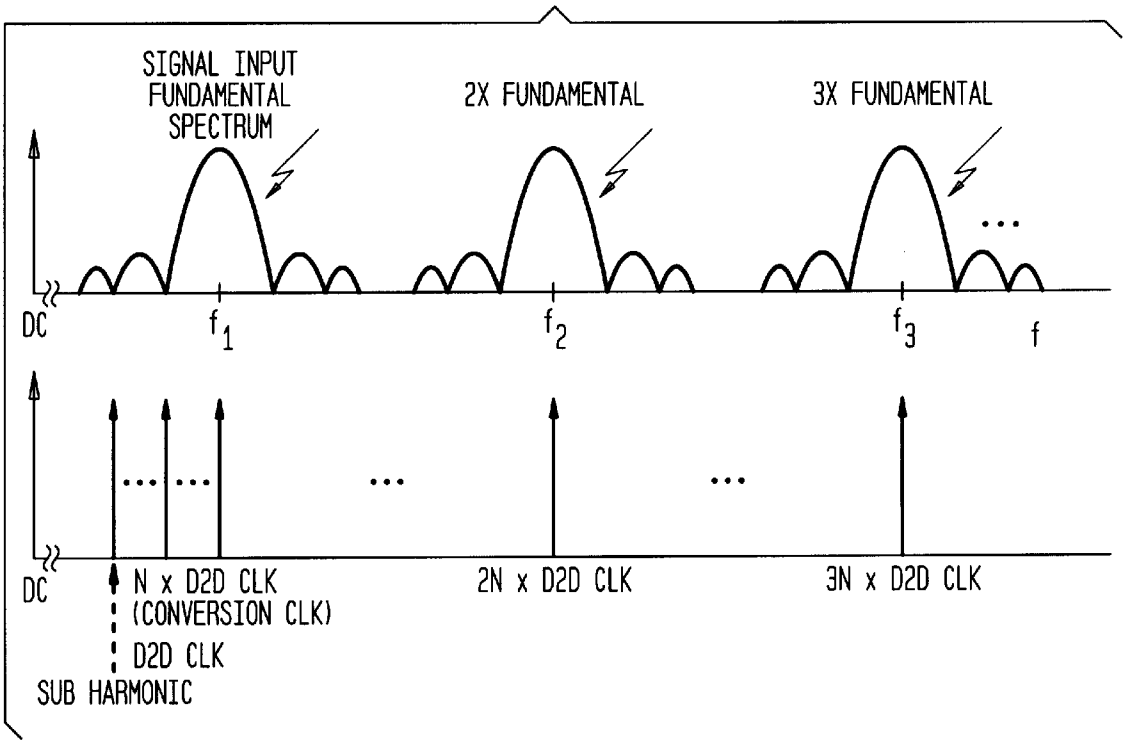

FIG. 86H

DESIRED TERM SQUARE LAW TERM

$$V_0 = k_1 V_i + k_2 V_i^2 + k_3 V_i^3$$

FIG. 86I

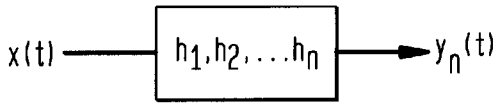

FIG. 87

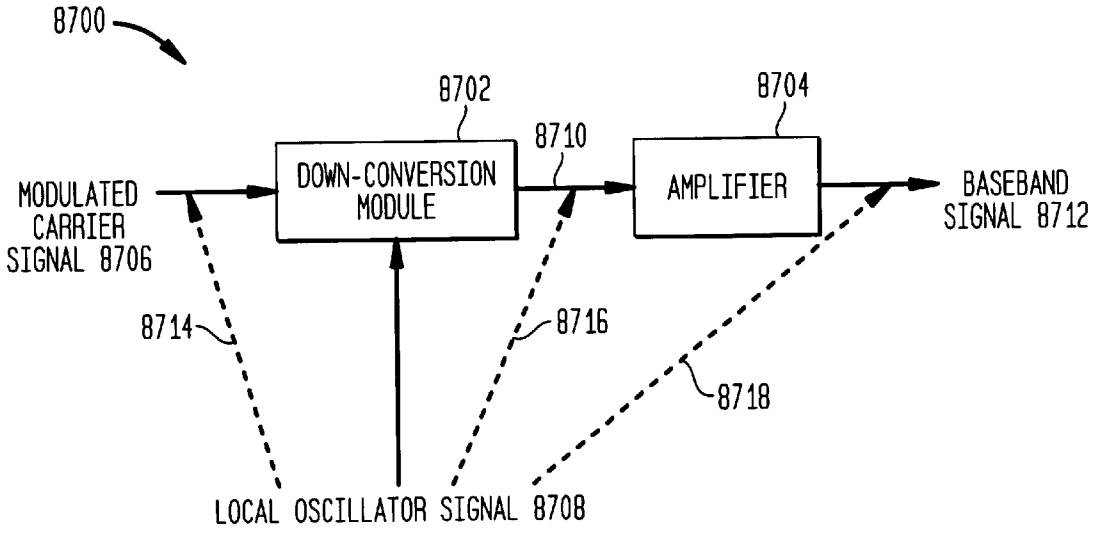
8700
8702
8704
8710
DOWN-CONVERSION MODULE
AMPLIFIER
MODULATED CARRIER SIGNAL 8706
BASEBAND SIGNAL 8712
8714
8716
8718
LOCAL OSCILLATOR SIGNAL 8708

FIG. 88A

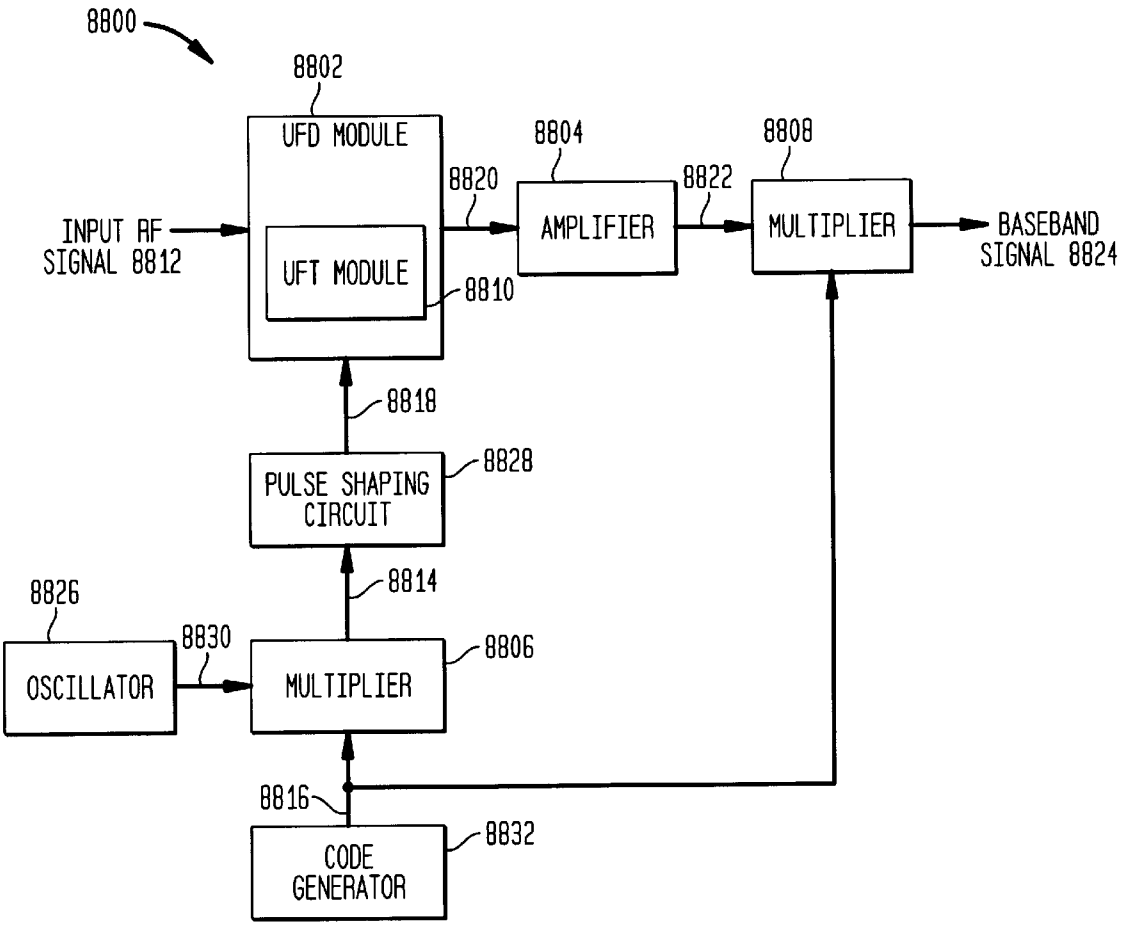
8800
8802
UFD MODULE
UFT MODULE
8810
INPUT RF SIGNAL 8812
8820
8804
AMPLIFIER
8822
8808
MULTIPLIER
BASEBAND SIGNAL 8824
8818
PULSE SHAPING CIRCUIT
8828
8814
8826
OSCILLATOR
8830
MULTIPLIER
8806
8816
CODE GENERATOR
8832

FIG. 88B

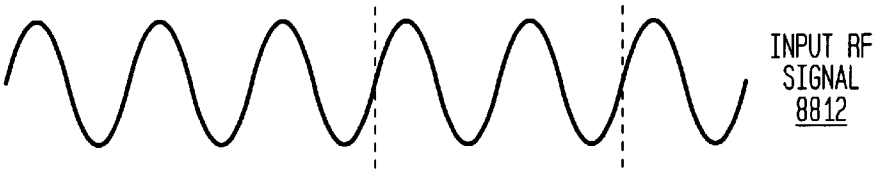

FIG. 88C

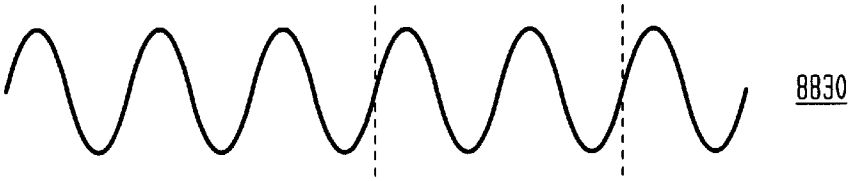

FIG. 88D

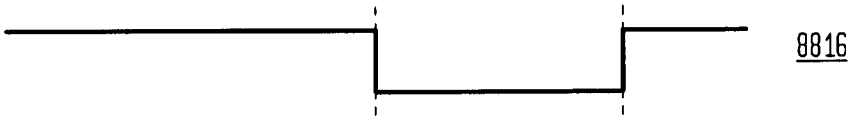

FIG. 88E

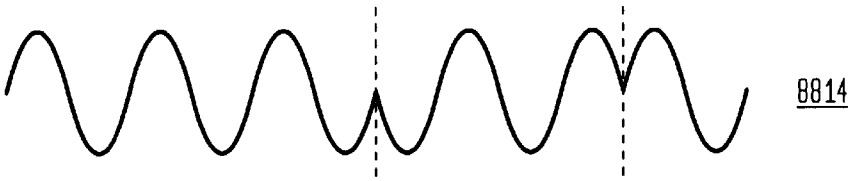

FIG. 88F

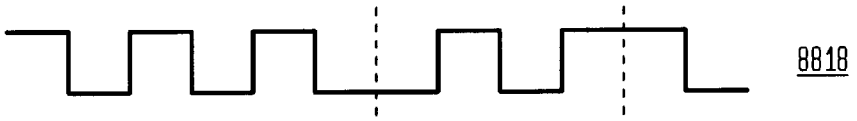

FIG. 88G

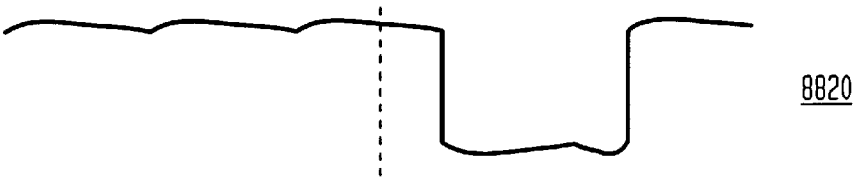

FIG. 88H

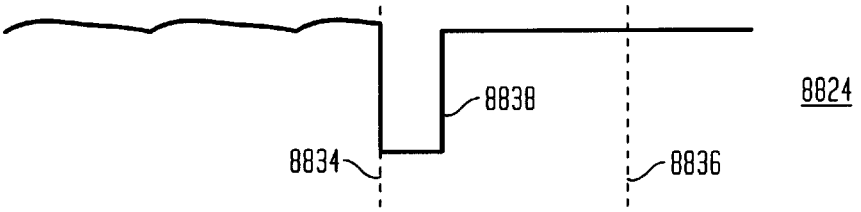

FIG. 89

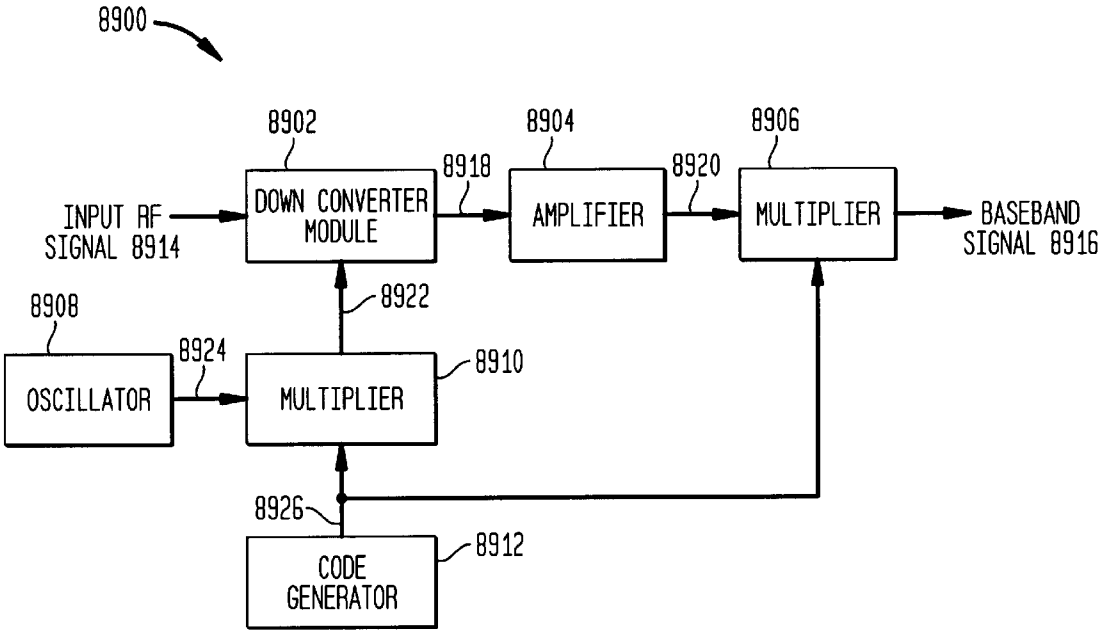
8900
8902
8904
8906
8918
8920
INPUT RF SIGNAL 8914
DOWN CONVERTER MODULE
AMPLIFIER
MULTIPLIER
BASEBAND SIGNAL 8916
8908
8922
8924
8910
OSCILLATOR
MULTIPLIER
8926
8912
CODE GENERATOR

FIG. 90

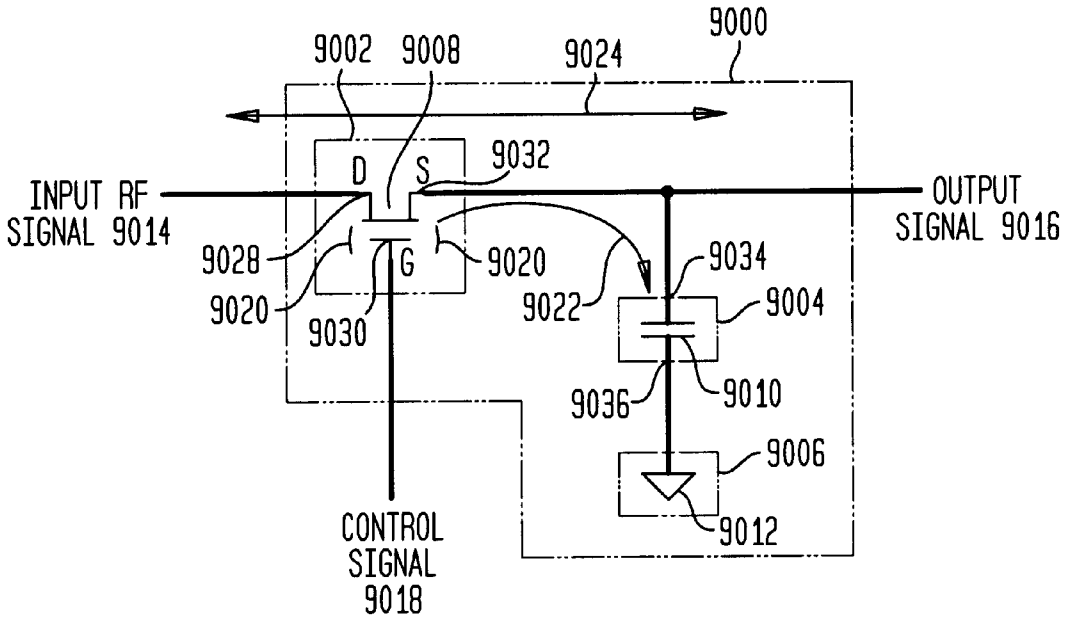
9000
9002
9008
9024
D
S
9032
INPUT RF
SIGNAL 9014
OUTPUT
SIGNAL 9016
9028
G
9020
9034
9020
9022
9004
9030
9036
9010
9006
9012
CONTROL
SIGNAL
9018

FIG. 91

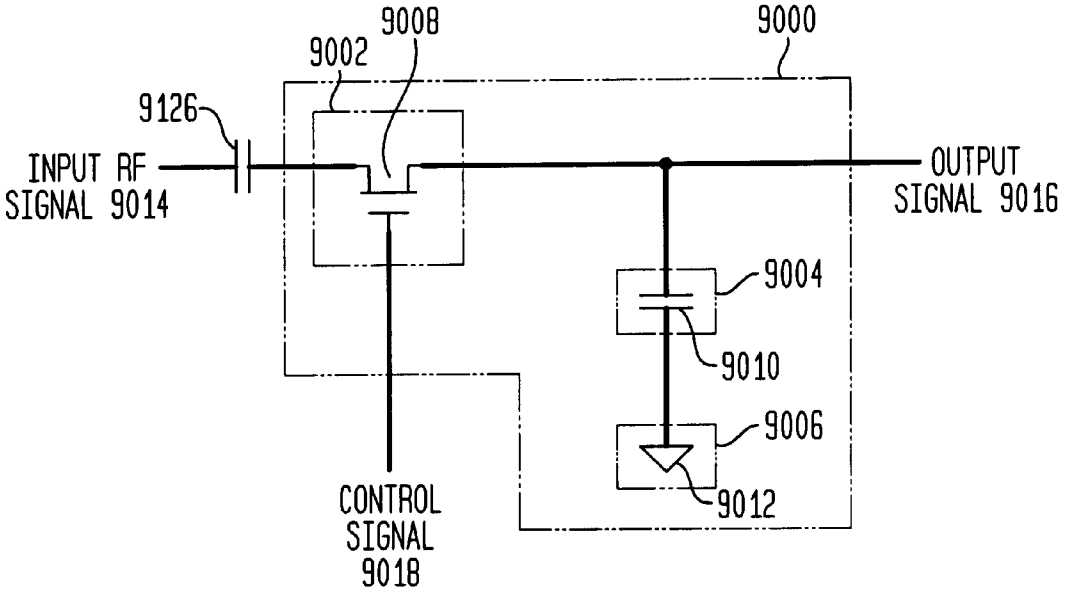
9008
9000
9002
9126
INPUT RF
SIGNAL 9014
OUTPUT
SIGNAL 9016
9004
9010
9006
9012
CONTROL
SIGNAL
9018

FIG. 92A

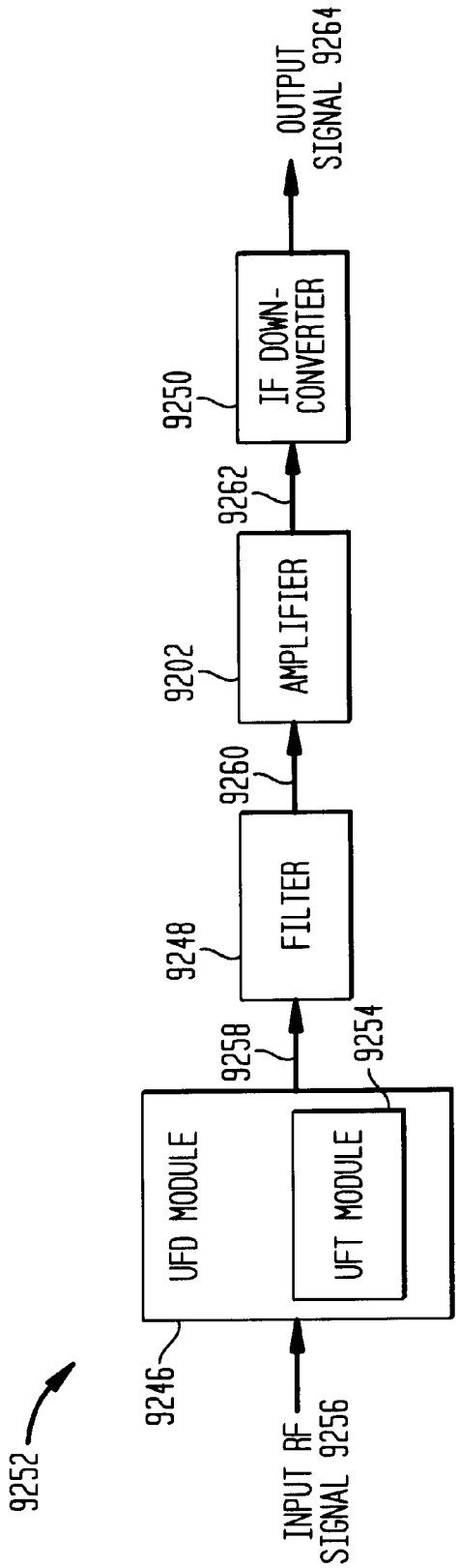
9252
9246
UFD MODULE
UFT MODULE
9254
INPUT RF SIGNAL 9256
9258
9248
FILTER
9260
9202
AMPLIFIER
9262
9250
IF DOWN-CONVERTER
OUTPUT SIGNAL 9264

FIG. 92B

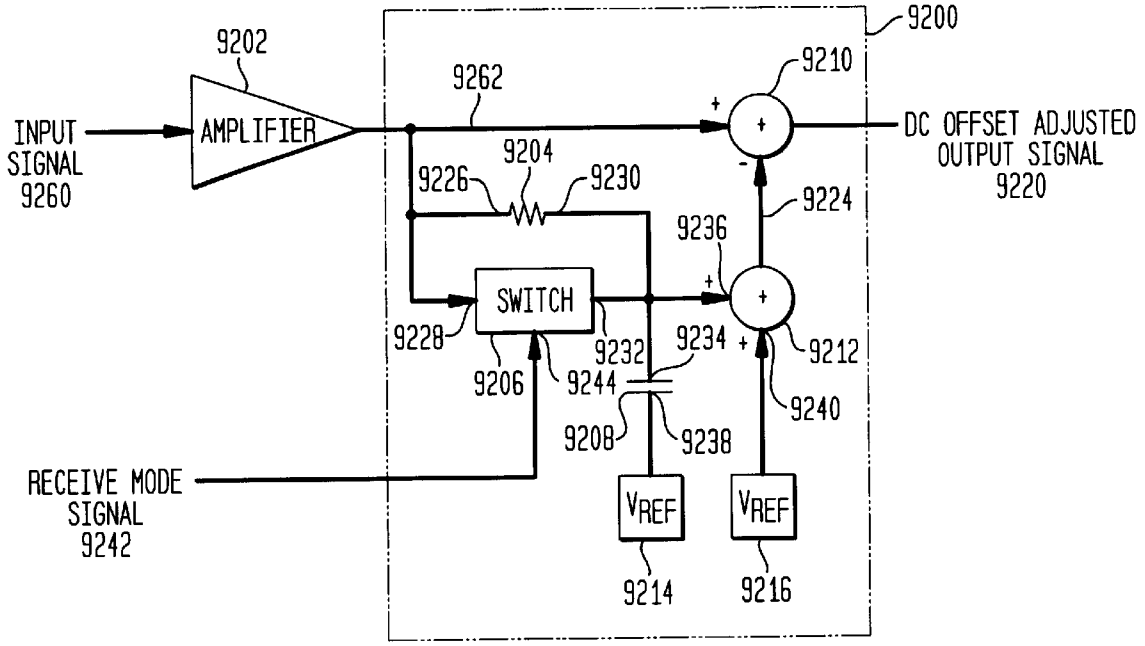
9200
9202
AMPLIFIER
INPUT SIGNAL 9260
9262
9210
DC OFFSET ADJUSTED OUTPUT SIGNAL 9220
9204
9226
9230
9224
9236
SWITCH
9228
9232
9234
9212
9206
9244
9240
9208
9238
RECEIVE MODE SIGNAL 9242
VREF
VREF
9214
9216

FIG. 93

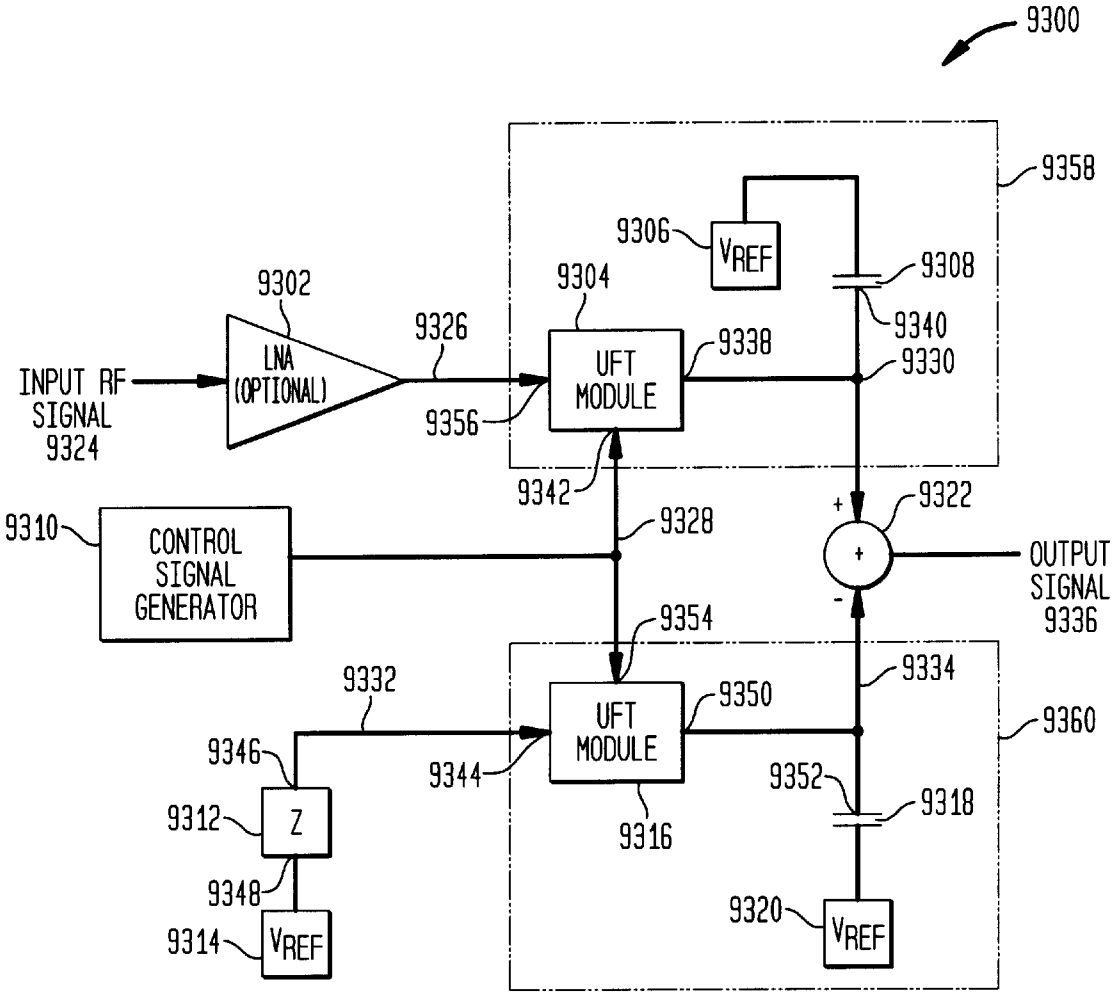
9300
9358
9306
VREF
9308
9302
9304
9340
9326
9338
9330
INPUT RF SIGNAL 9324
LNA (OPTIONAL)
UFT MODULE
9356
9342
9322
9310
CONTROL SIGNAL GENERATOR
9328
OUTPUT SIGNAL 9336
9354
9332
9334
9350
9360
9346
9344
9352
9318
9312
Z
9316
9348
9320
9314
VREF
VREF

FIG. 94A

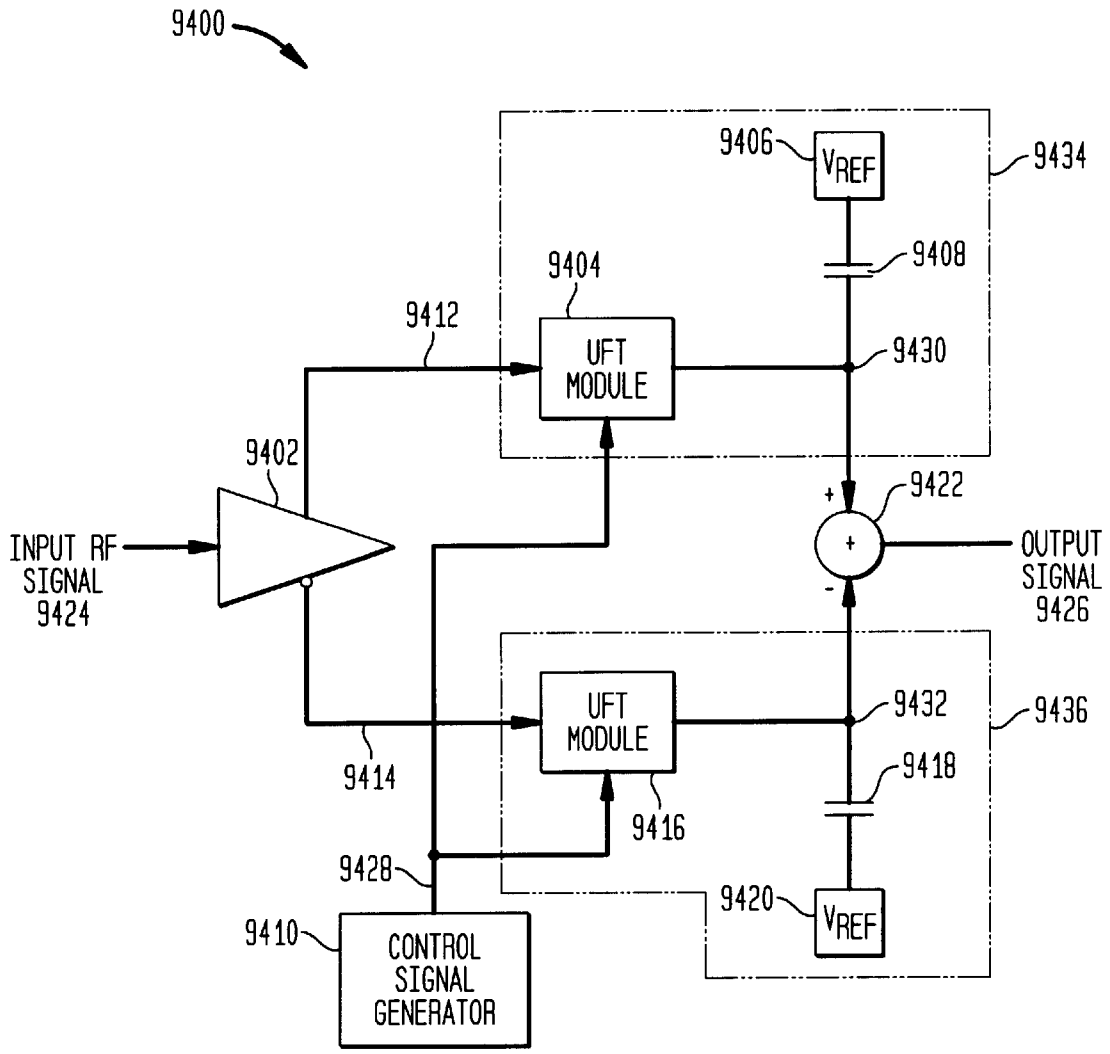
9400
9406
VREF
9434
9408
9404
9412
UFT MODULE
9430
9402
9422
+
INPUT RF SIGNAL 9424
+
OUTPUT SIGNAL 9426
-
UFT MODULE
9432
9436
9414
9418
9416
9428
9420
VREF
9410
CONTROL SIGNAL GENERATOR

FIG. 94B

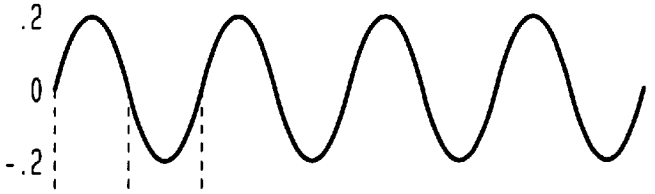

INPUT RF SIGNAL 9424

FIG. 94C

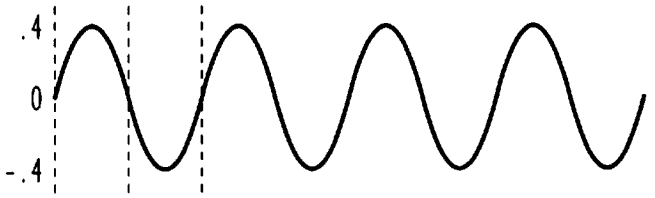

AMPLIFIED INPUT RF SIGNAL 9412

FIG. 94D

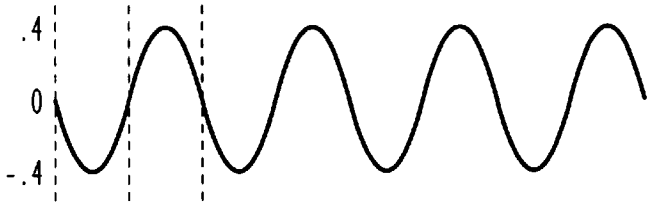

INVERTED AMPLIFIED INPUT RF SIGNAL 9414

FIG. 94E

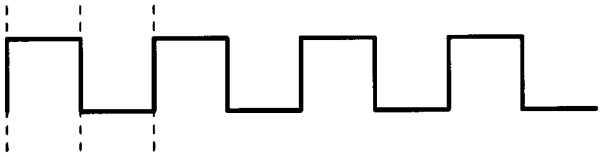

CONTROL SIGNAL 9428

FIG. 94F

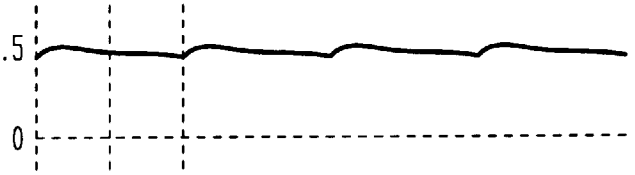

NON-INVERTED OUTPUT SIGNAL 9430

FIG. 94G

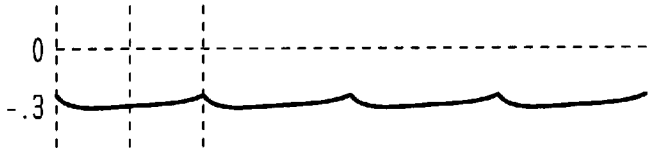

INVERTED OUTPUT SIGNAL 9432

FIG. 94H

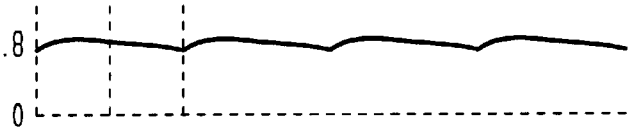

OUTPUT SIGNAL 9426

FIG. 95

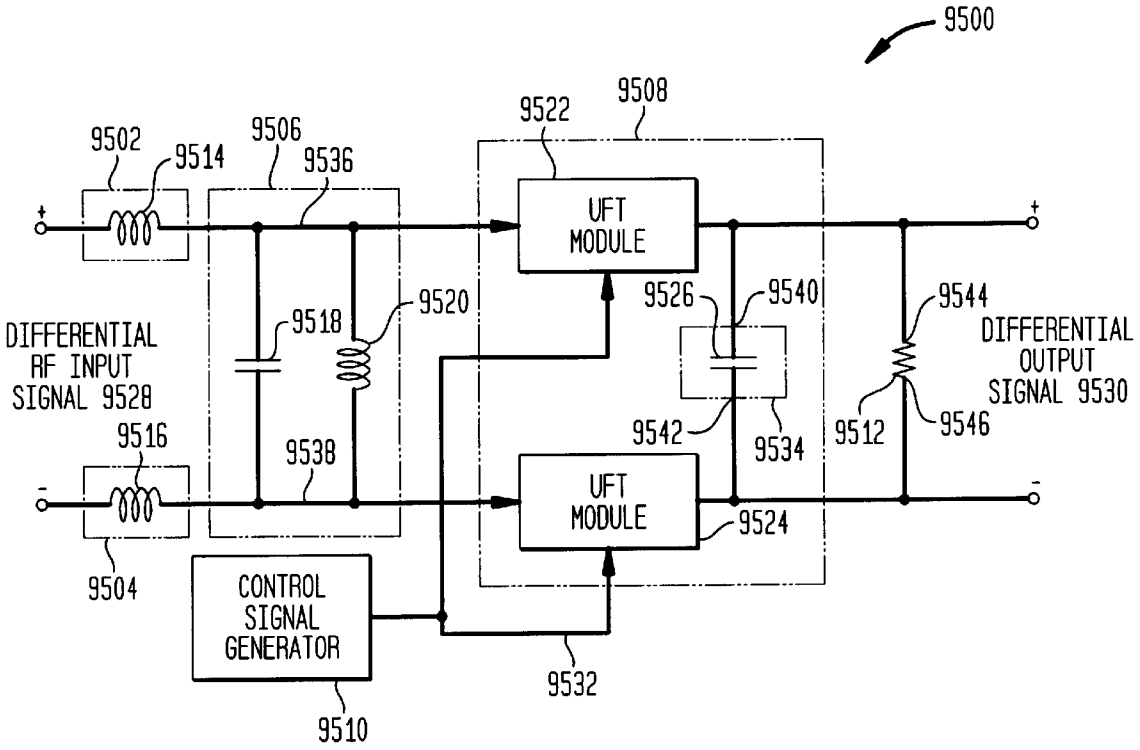
9500
9508
9522
9502
9514
9506
9536
UFT MODULE
9518
9520
9526
9540
9544
DIFFERENTIAL RF INPUT SIGNAL 9528
DIFFERENTIAL OUTPUT SIGNAL 9530
9542
9534
9512
9546
9516
9538
UFT MODULE
9524
9504
CONTROL SIGNAL GENERATOR
9532
9510

FIG. 96

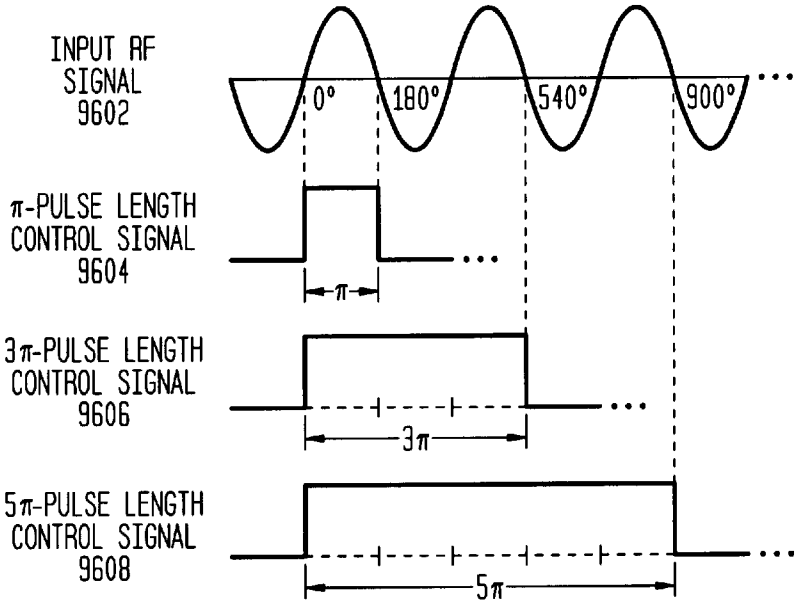
INPUT RF SIGNAL 9602
0°
180°
540°
900°
π-PULSE LENGTH CONTROL SIGNAL 9604
π
3π-PULSE LENGTH CONTROL SIGNAL 9606
3π
5π-PULSE LENGTH CONTROL SIGNAL 9608
5π

FIG. 97

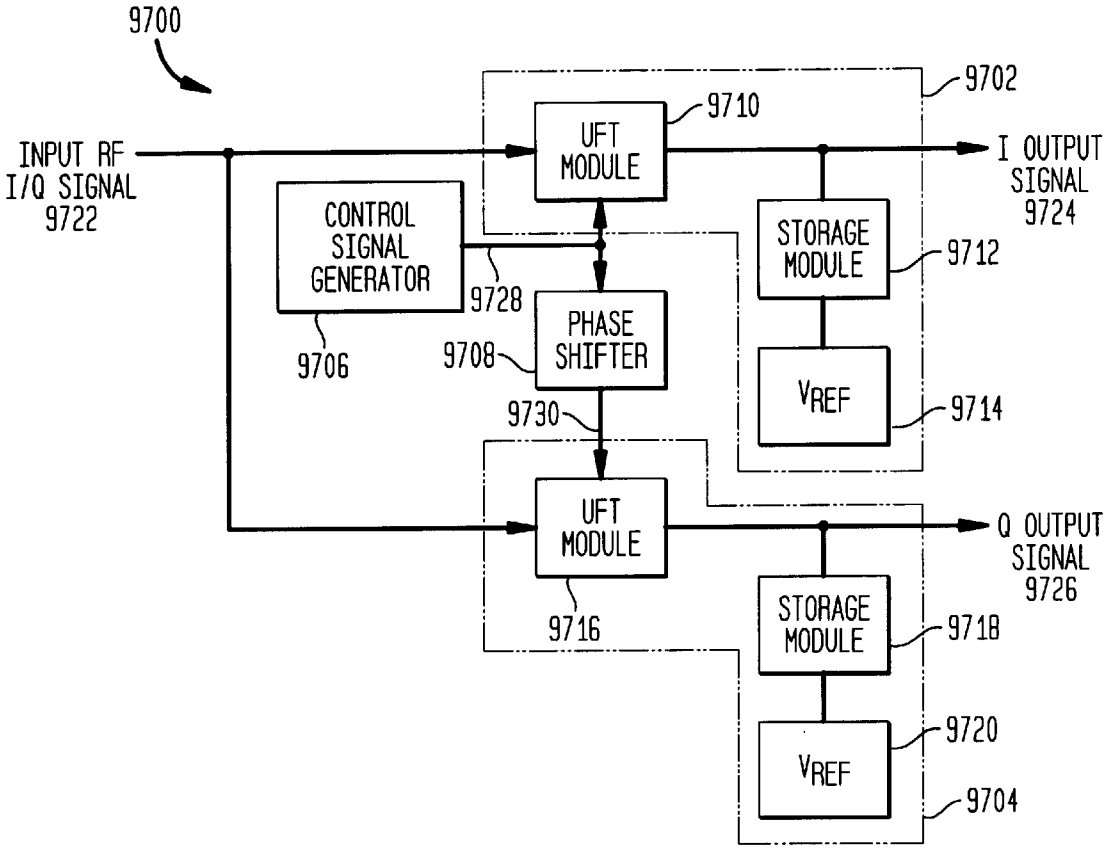
9700
9702
INPUT RF I/Q SIGNAL 9722
UFT MODULE
9710
I OUTPUT SIGNAL 9724
CONTROL SIGNAL GENERATOR
9728
STORAGE MODULE
9712
PHASE SHIFTER
9706
9708
VREF
9714
9730
UFT MODULE
Q OUTPUT SIGNAL 9726
9716
STORAGE MODULE
9718
9720
VREF
9704

FIG. 98A

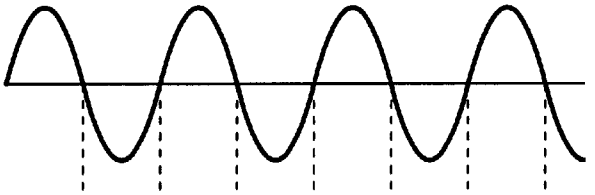

INPUT RF I/Q SIGNAL 9722

FIG. 98B

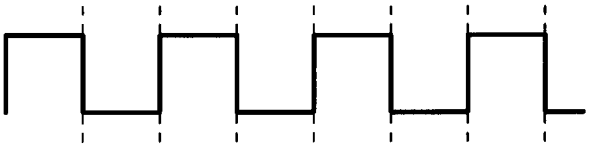

I-CONTROL SIGNAL 9802

FIG. 98C

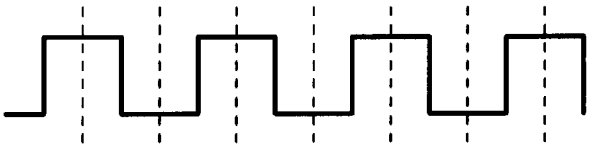

Q-CONTROL SIGNAL 9804

FIG. 98D

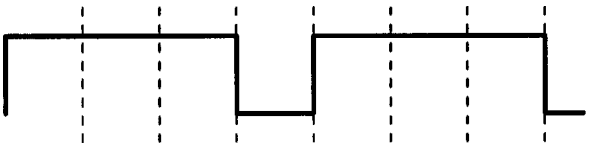

3π I-CONTROL SIGNAL 9806

FIG. 98E

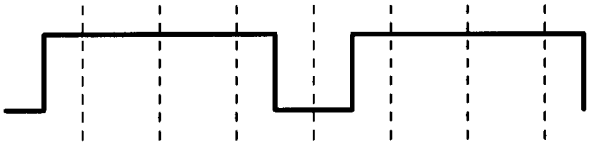

3π Q-CONTROL SIGNAL 9808

FIG. 98F

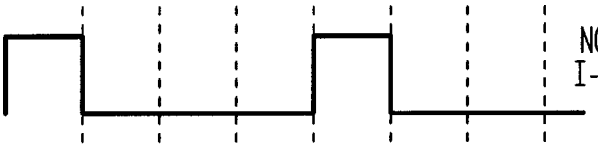

NON-OVERLAPPING I-CONTROL SIGNAL 9810

FIG. 98G

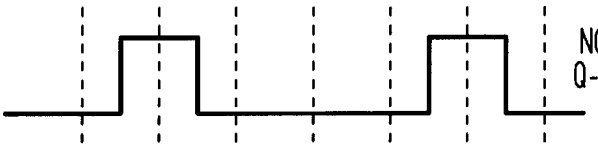

NON-OVERLAPPING Q-CONTROL SIGNAL 9812

FIG. 98H

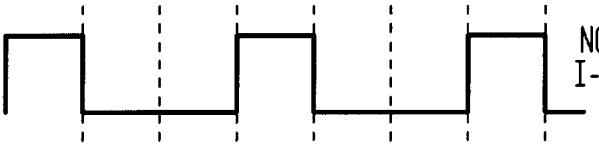

NON-OVERLAPPING I-CONTROL SIGNAL 9814

FIG. 98I

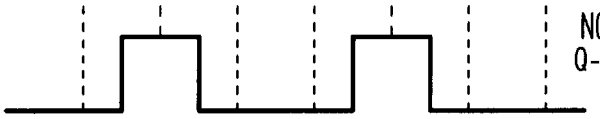

NON-OVERLAPPING Q-CONTROL SIGNAL 9816

FIG. 99

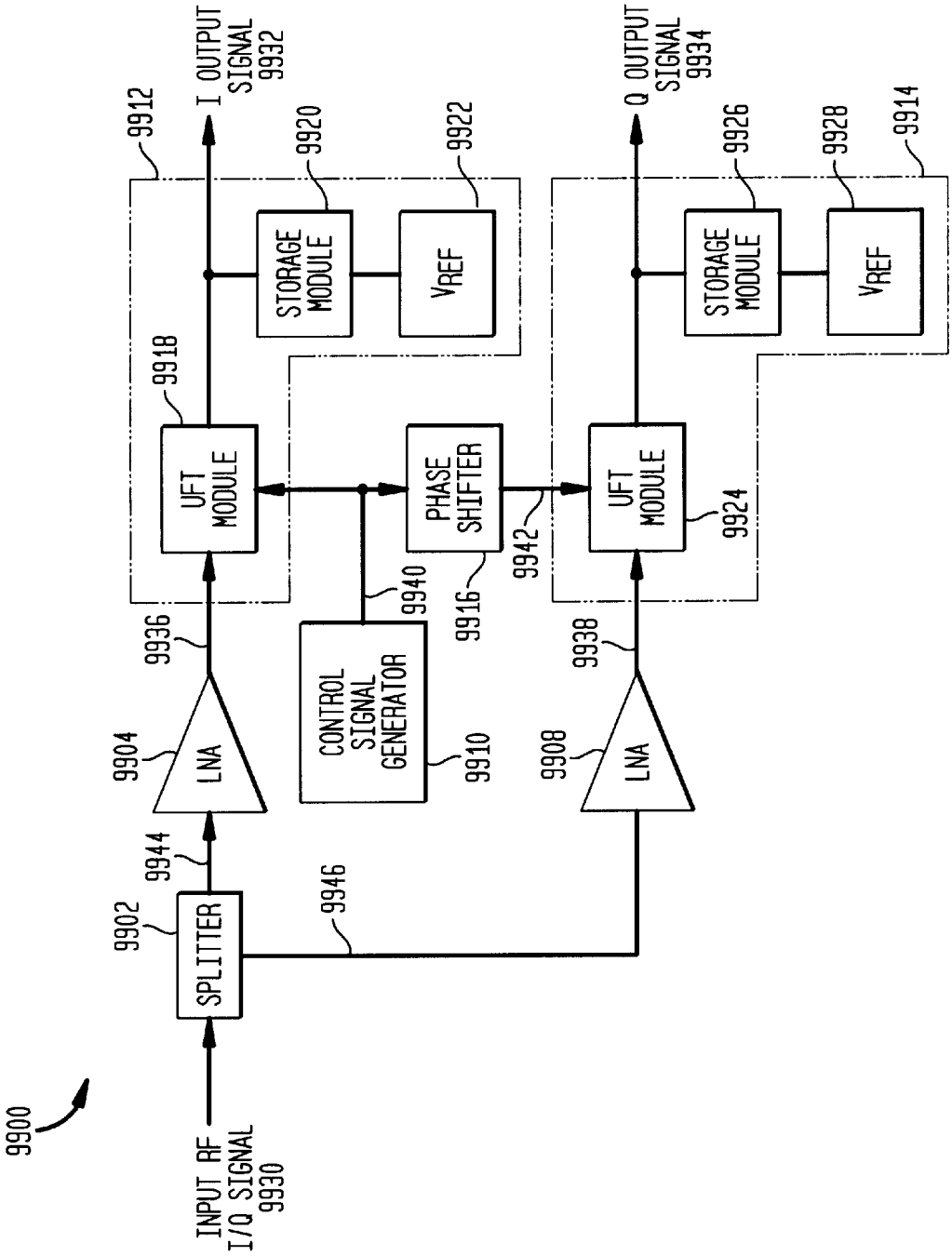
9900
INPUT RF I/Q SIGNAL 9930
9902
SPLITTER
9944
9946
9904
LNA
9936
9908
LNA
9938
CONTROL SIGNAL GENERATOR
9910
9940
PHASE SHIFTER
9916
9942
9912
9918
UFT MODULE
I OUTPUT SIGNAL 9932
9920
STORAGE MODULE
9922
VREF
UFT MODULE
9924
Q OUTPUT SIGNAL 9934
9926
STORAGE MODULE
9928
VREF
9914

FIG. 100

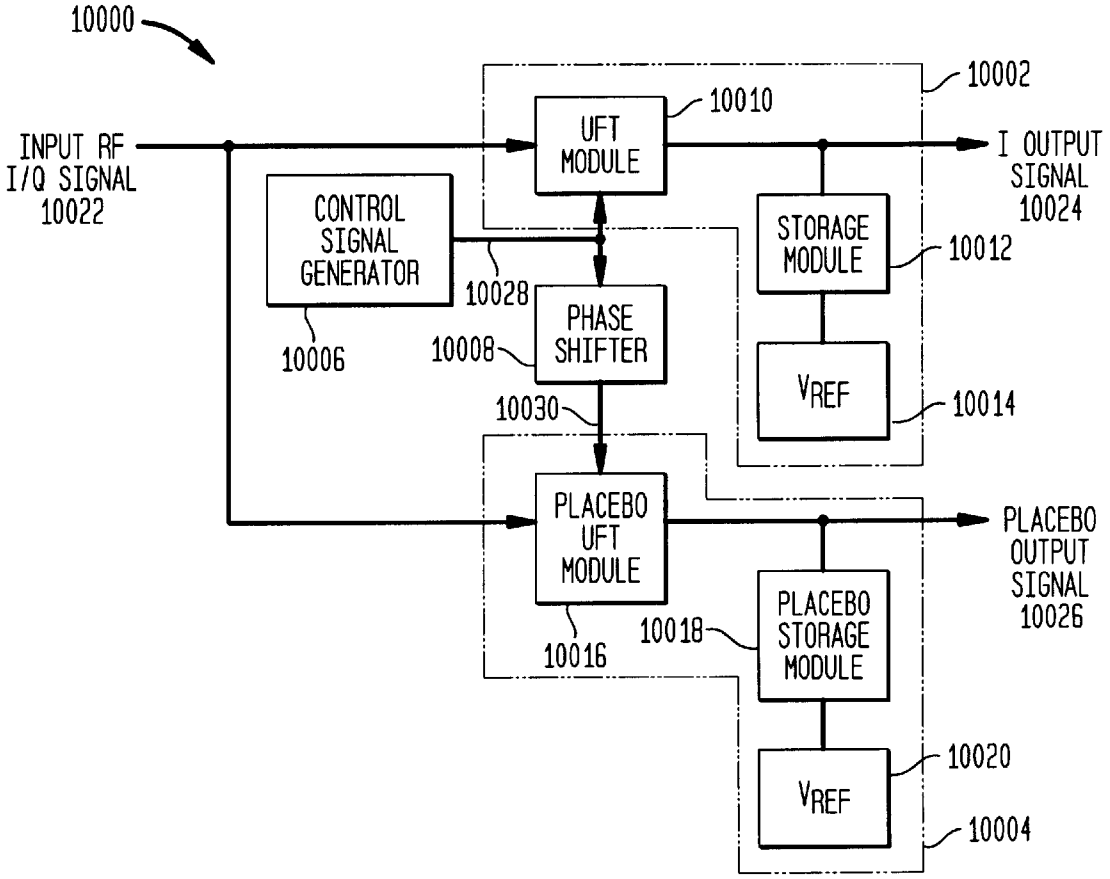

FIG. 101

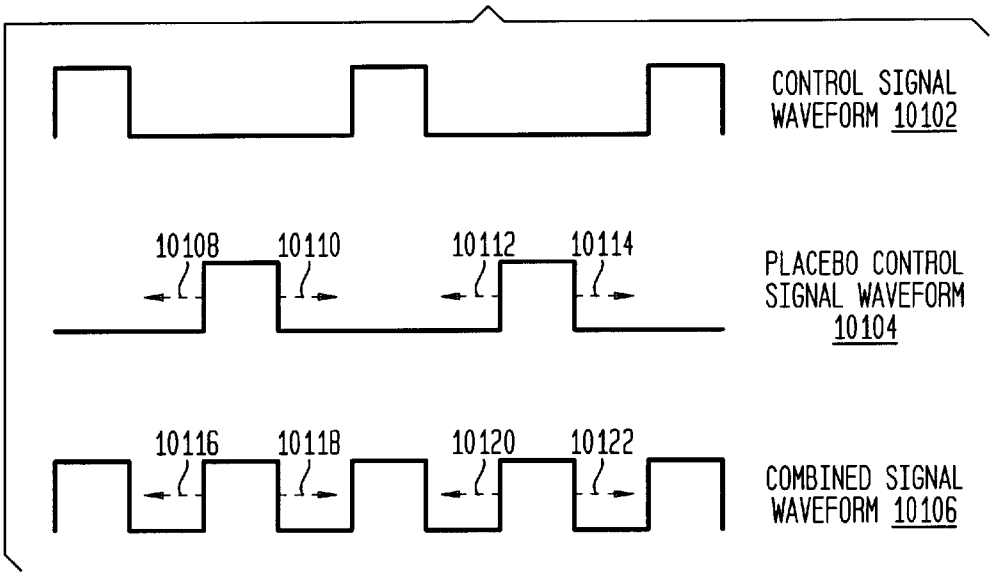

FIG. 102

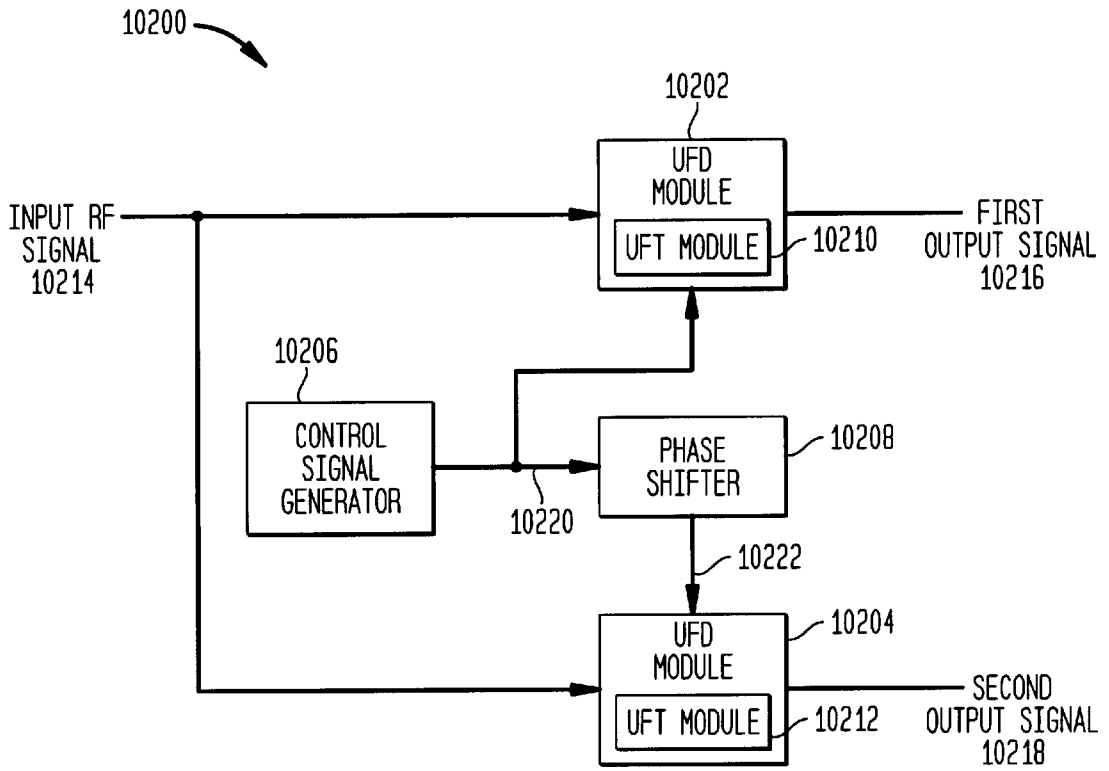
10200
10202
UFD MODULE
UFT MODULE
10210
INPUT RF SIGNAL 10214
FIRST OUTPUT SIGNAL 10216
10206
CONTROL SIGNAL GENERATOR
PHASE SHIFTER
10208
10220
10222
10204
UFD MODULE
UFT MODULE
10212
SECOND OUTPUT SIGNAL 10218

FIG. 103

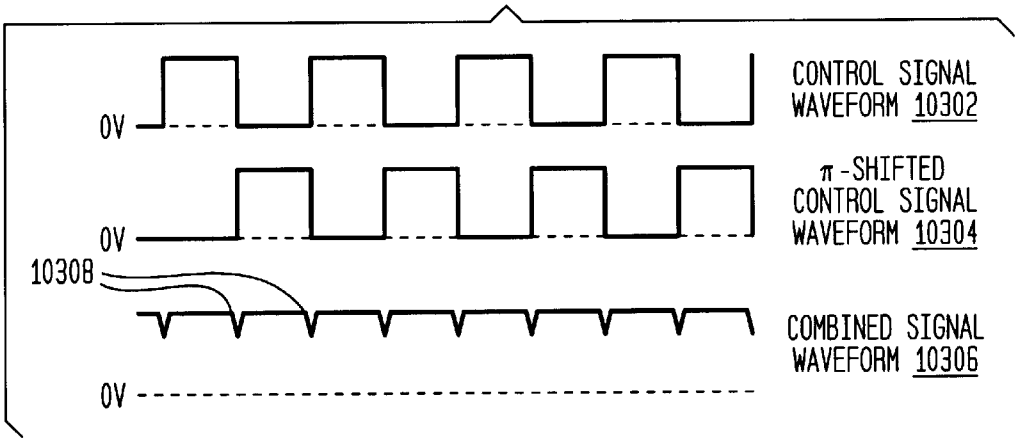

FIG. 104

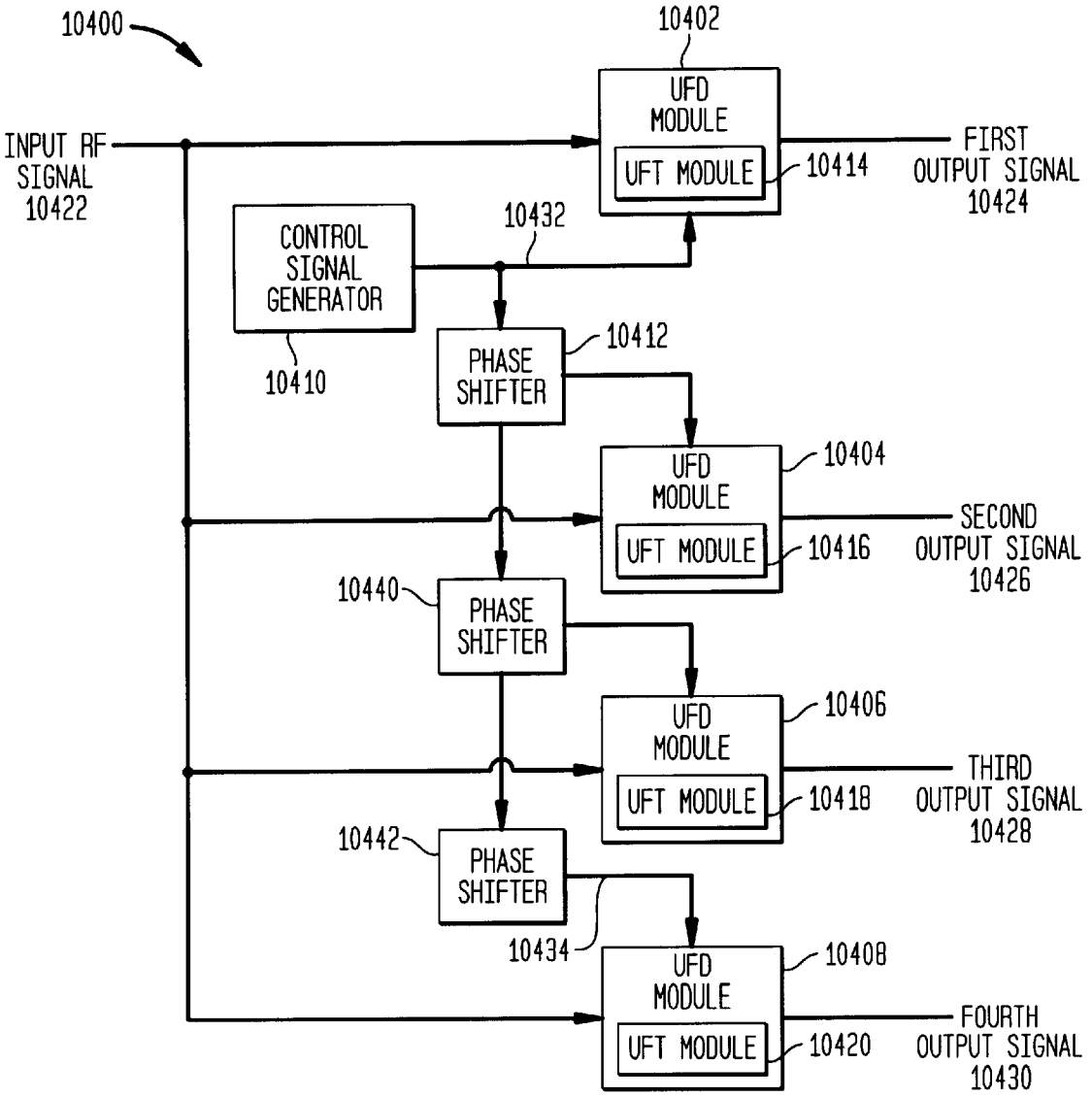

FIG. 105

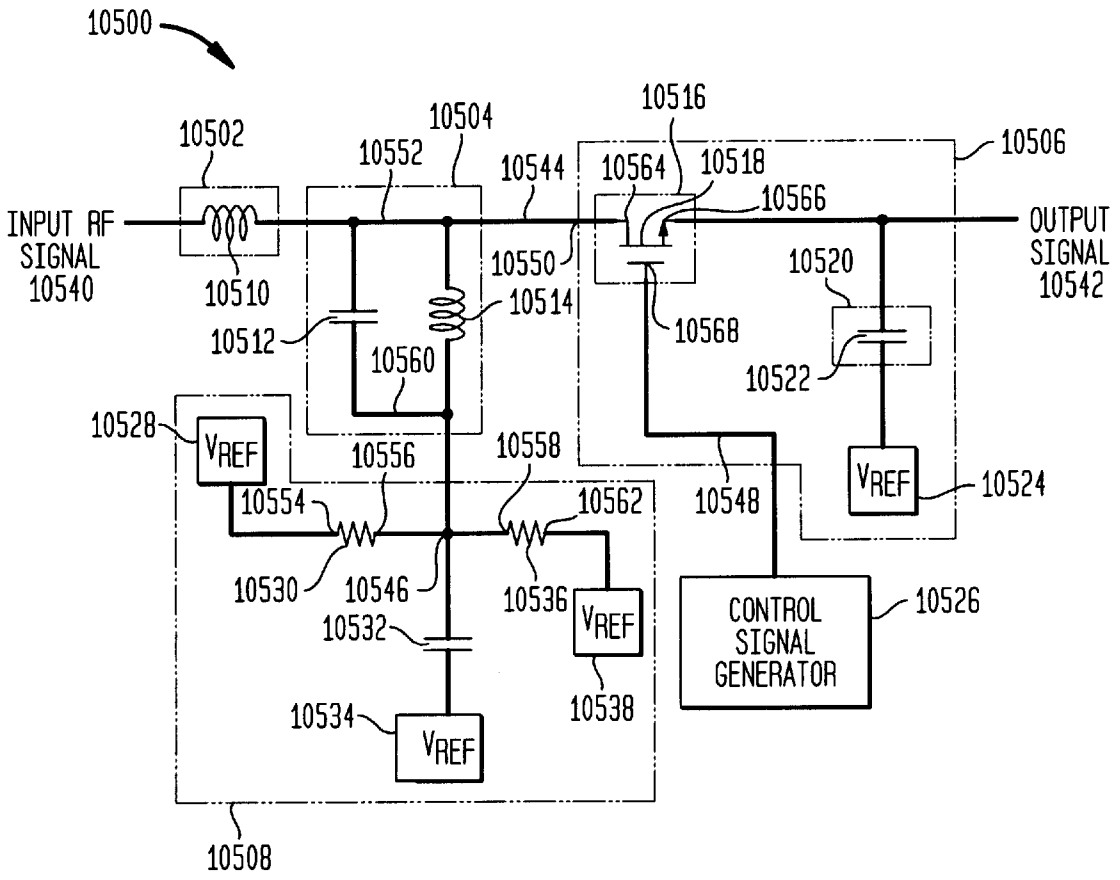
10500
10502
10504
10552
10544
10516
10564
10518
10506
10566
INPUT RF SIGNAL 10540
OUTPUT SIGNAL 10542
10510
10550
10520
10514
10512
10568
10560
10522
10528
VREF
10556
10558
10554
10562
10548
VREF
10524
10530
10546
10536
VREF
10532
CONTROL SIGNAL GENERATOR
10526
10538
10534
VREF
10508

FIG. 106A

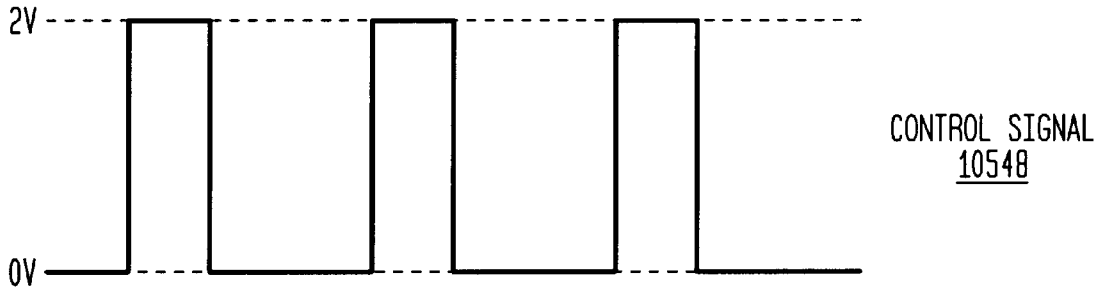

FIG. 106B

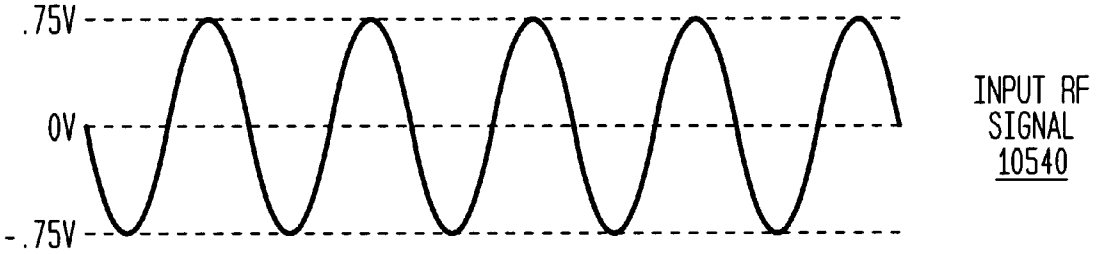

FIG. 106C

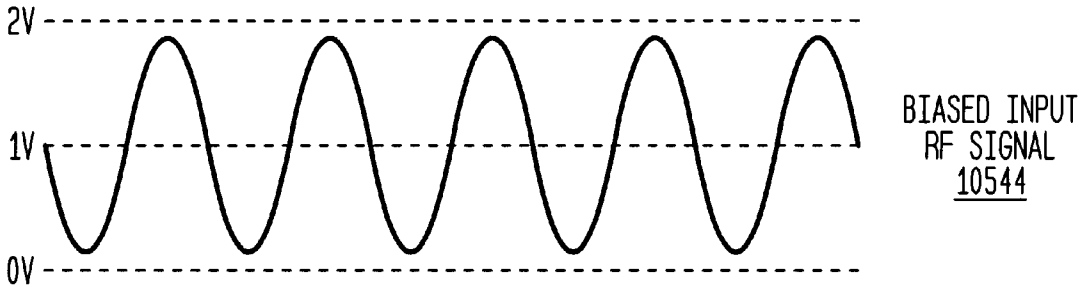

FIG. 107

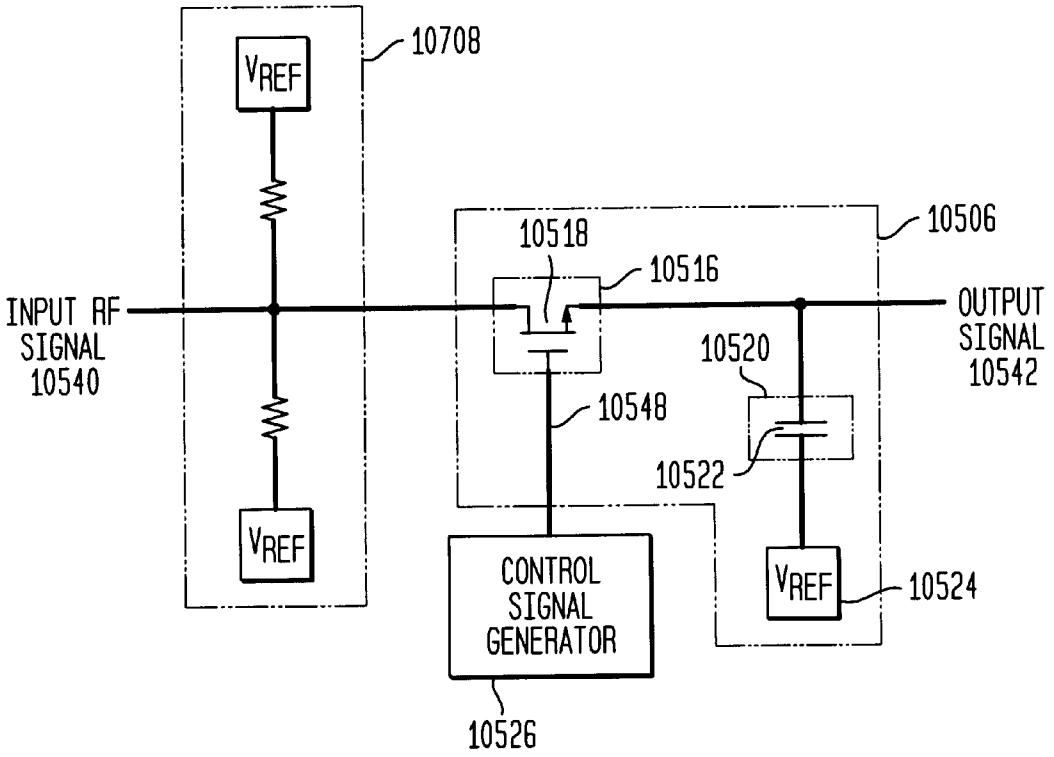
10708
VREF
VREF
10506
10518
10516
INPUT RF
SIGNAL
10540
OUTPUT
SIGNAL
10542
10520
10548
10522
CONTROL
SIGNAL
GENERATOR
VREF
10524
10526

FIG. 108

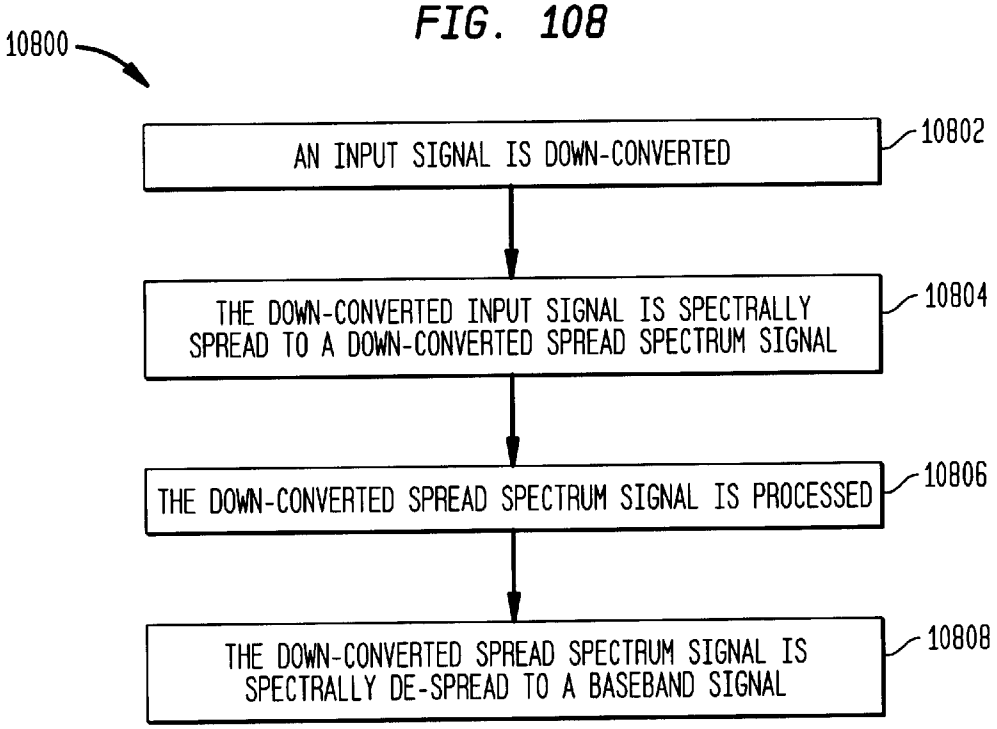

FIG. 109

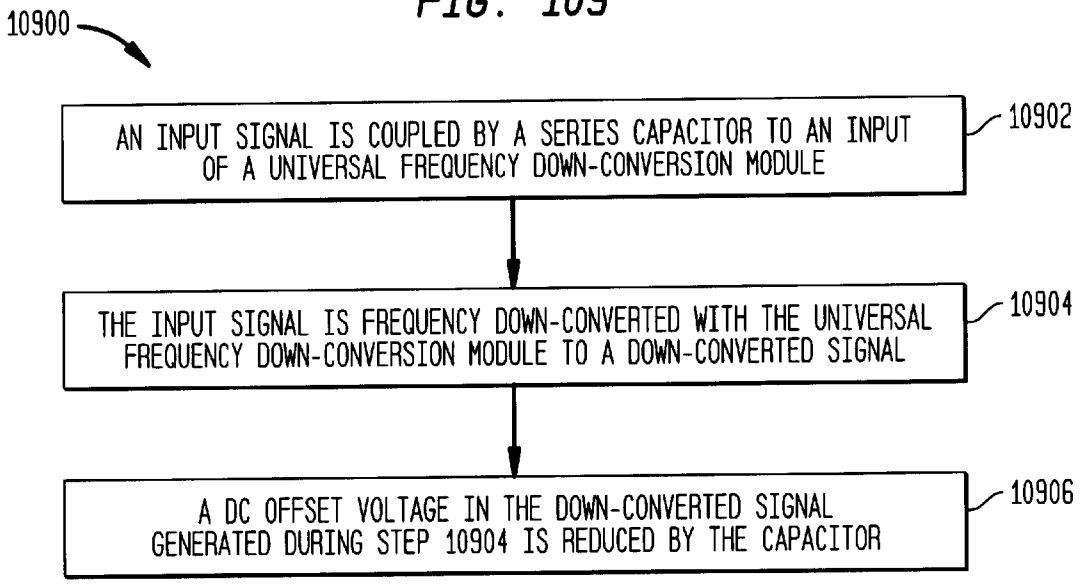

FIG. 110

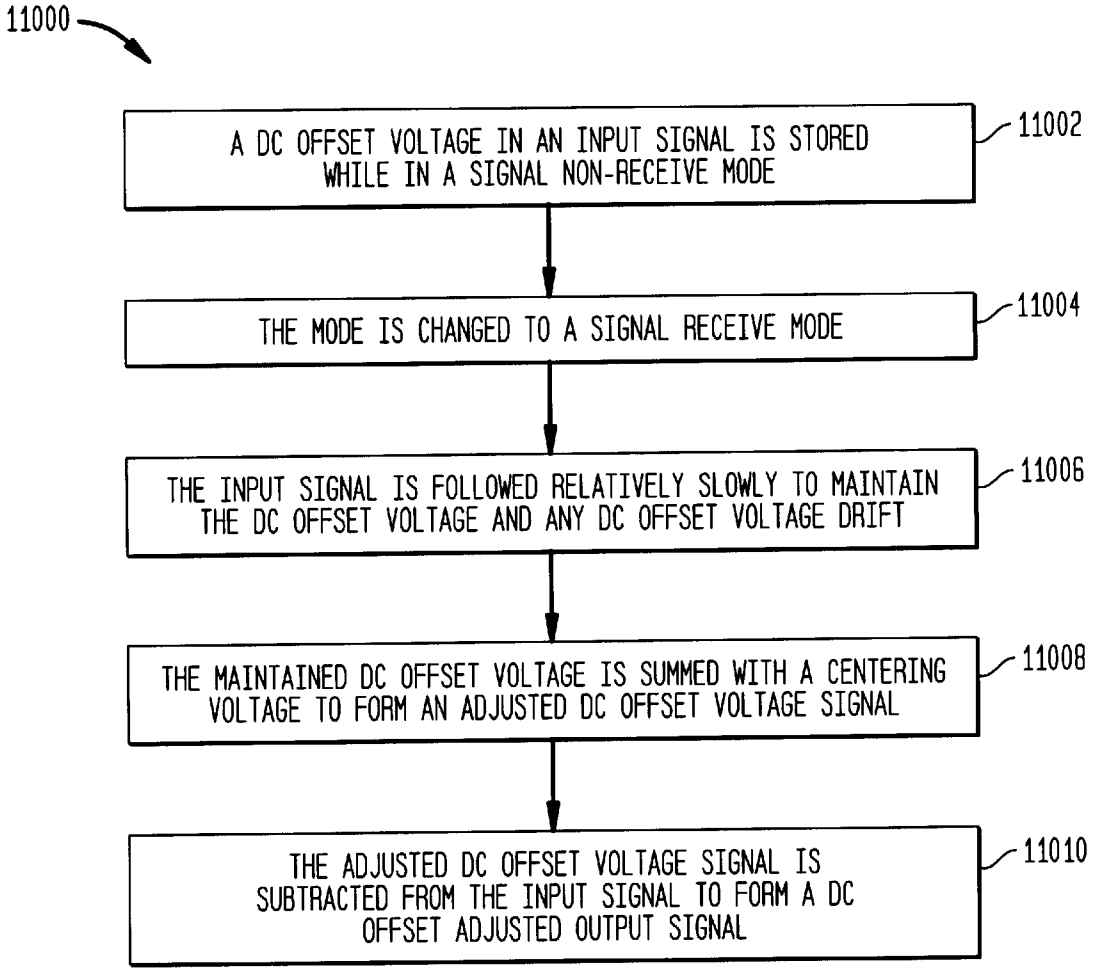
11000
A DC OFFSET VOLTAGE IN AN INPUT SIGNAL IS STORED WHILE IN A SIGNAL NON-RECEIVE MODE
11002
THE MODE IS CHANGED TO A SIGNAL RECEIVE MODE
11004
THE INPUT SIGNAL IS FOLLOWED RELATIVELY SLOWLY TO MAINTAIN THE DC OFFSET VOLTAGE AND ANY DC OFFSET VOLTAGE DRIFT
11006
THE MAINTAINED DC OFFSET VOLTAGE IS SUMMED WITH A CENTERING VOLTAGE TO FORM AN ADJUSTED DC OFFSET VOLTAGE SIGNAL
11008
THE ADJUSTED DC OFFSET VOLTAGE SIGNAL IS SUBTRACTED FROM THE INPUT SIGNAL TO FORM A DC OFFSET ADJUSTED OUTPUT SIGNAL
11010

FIG. 111

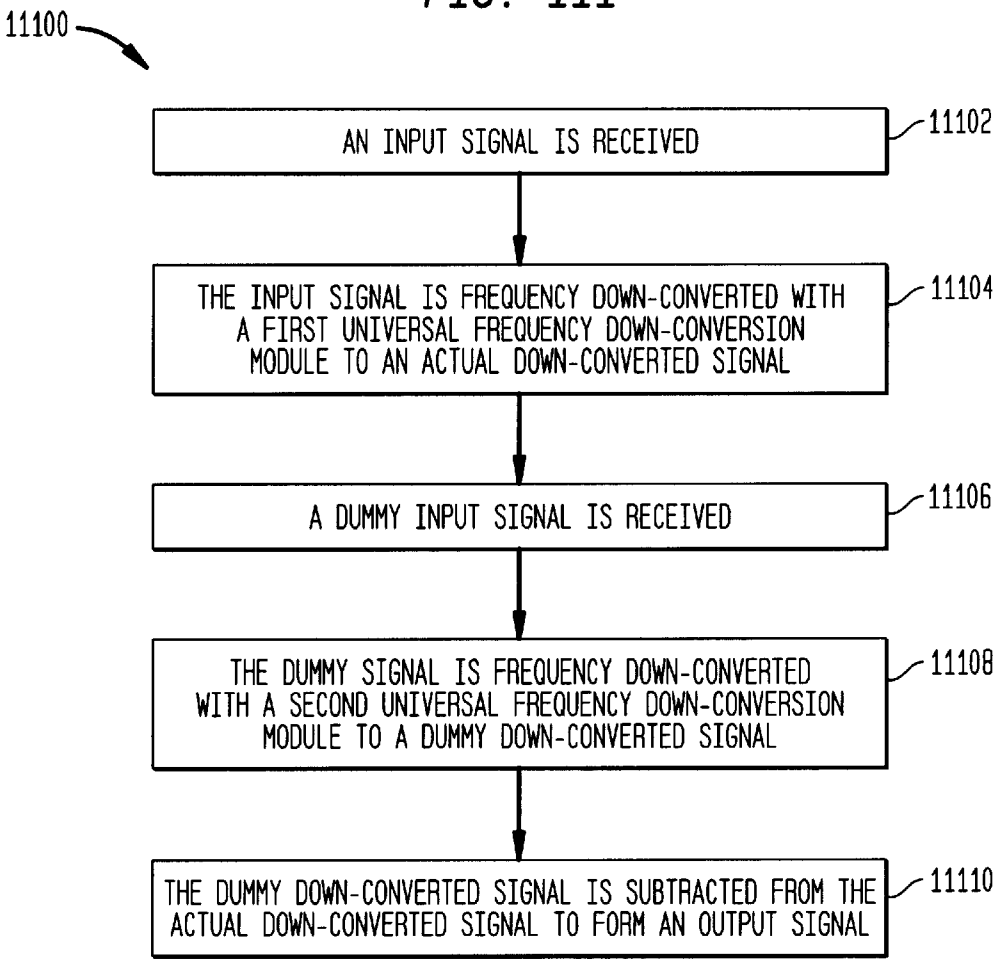
11100
AN INPUT SIGNAL IS RECEIVED
11102
THE INPUT SIGNAL IS FREQUENCY DOWN-CONVERTED WITH A FIRST UNIVERSAL FREQUENCY DOWN-CONVERSION MODULE TO AN ACTUAL DOWN-CONVERTED SIGNAL
11104
A DUMMY INPUT SIGNAL IS RECEIVED
11106
THE DUMMY SIGNAL IS FREQUENCY DOWN-CONVERTED WITH A SECOND UNIVERSAL FREQUENCY DOWN-CONVERSION MODULE TO A DUMMY DOWN-CONVERTED SIGNAL
11108
THE DUMMY DOWN-CONVERTED SIGNAL IS SUBTRACTED FROM THE ACTUAL DOWN-CONVERTED SIGNAL TO FORM AN OUTPUT SIGNAL
11110

FIG. 112

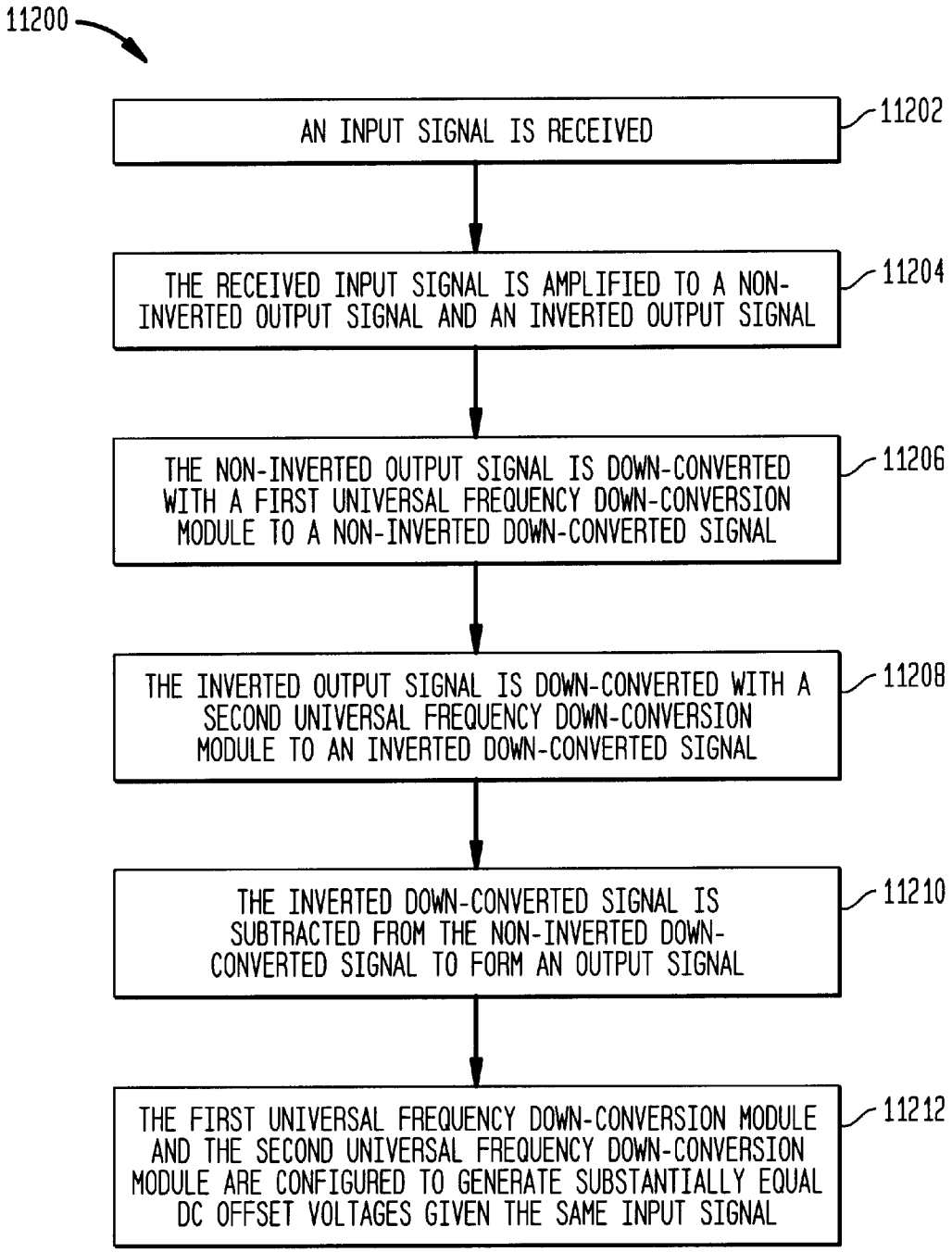
11200
AN INPUT SIGNAL IS RECEIVED
11202
THE RECEIVED INPUT SIGNAL IS AMPLIFIED TO A NON-INVERTED OUTPUT SIGNAL AND AN INVERTED OUTPUT SIGNAL
11204
THE NON-INVERTED OUTPUT SIGNAL IS DOWN-CONVERTED WITH A FIRST UNIVERSAL FREQUENCY DOWN-CONVERSION MODULE TO A NON-INVERTED DOWN-CONVERTED SIGNAL
11206
THE INVERTED OUTPUT SIGNAL IS DOWN-CONVERTED WITH A SECOND UNIVERSAL FREQUENCY DOWN-CONVERSION MODULE TO AN INVERTED DOWN-CONVERTED SIGNAL
11208
THE INVERTED DOWN-CONVERTED SIGNAL IS SUBTRACTED FROM THE NON-INVERTED DOWN-CONVERTED SIGNAL TO FORM AN OUTPUT SIGNAL
11210
THE FIRST UNIVERSAL FREQUENCY DOWN-CONVERSION MODULE AND THE SECOND UNIVERSAL FREQUENCY DOWN-CONVERSION MODULE ARE CONFIGURED TO GENERATE SUBSTANTIALLY EQUAL DC OFFSET VOLTAGES GIVEN THE SAME INPUT SIGNAL
11212

FIG. 113

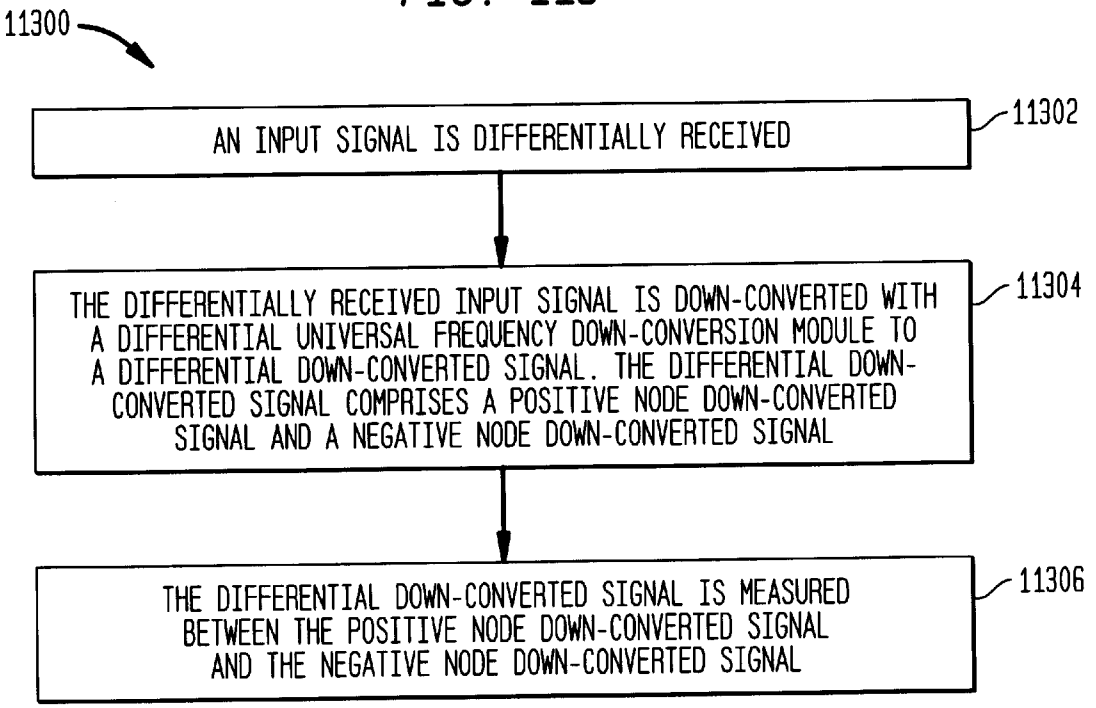

FIG. 114

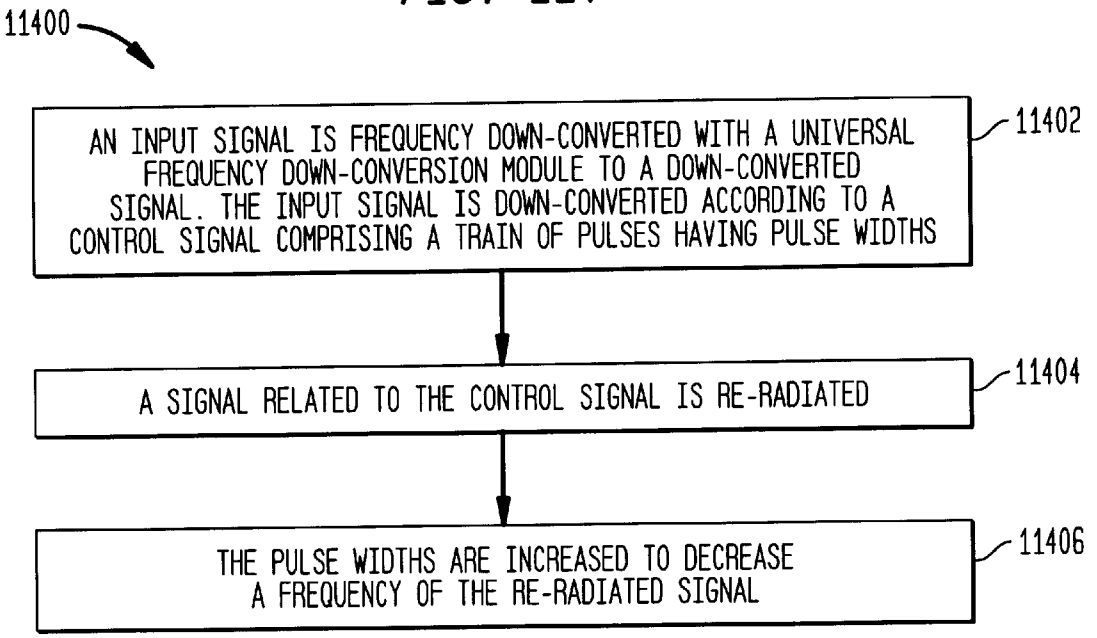

FIG. 115

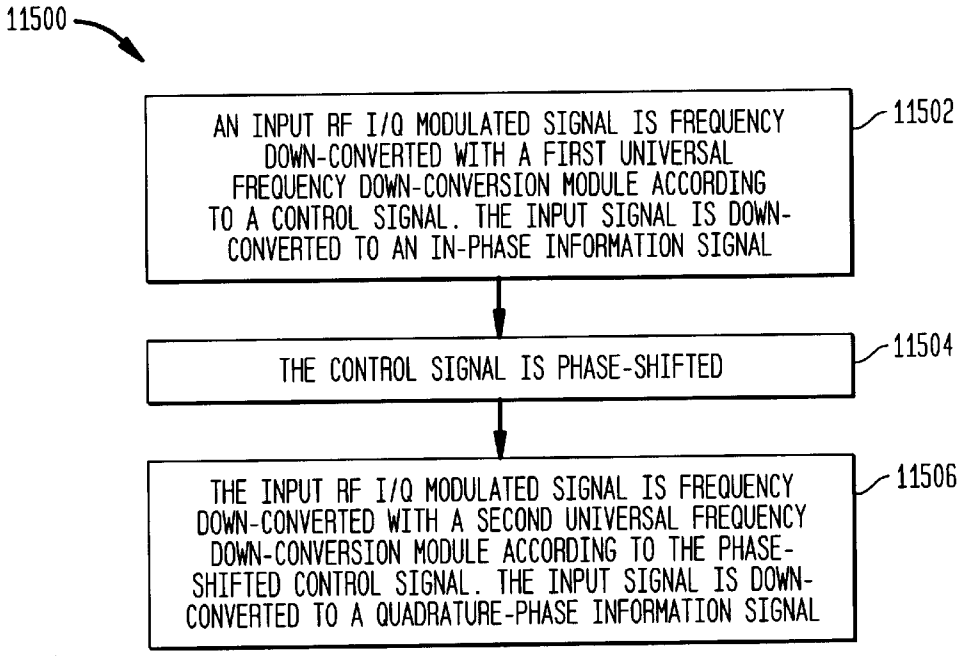

FIG. 116

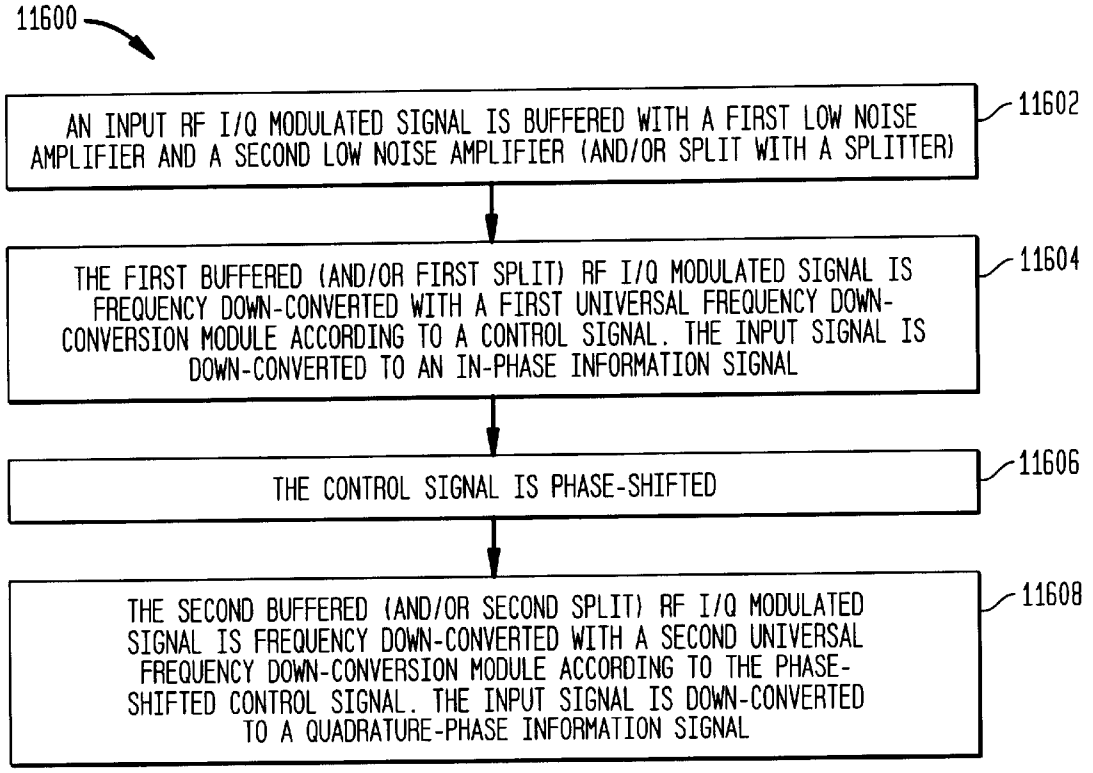

FIG. 117

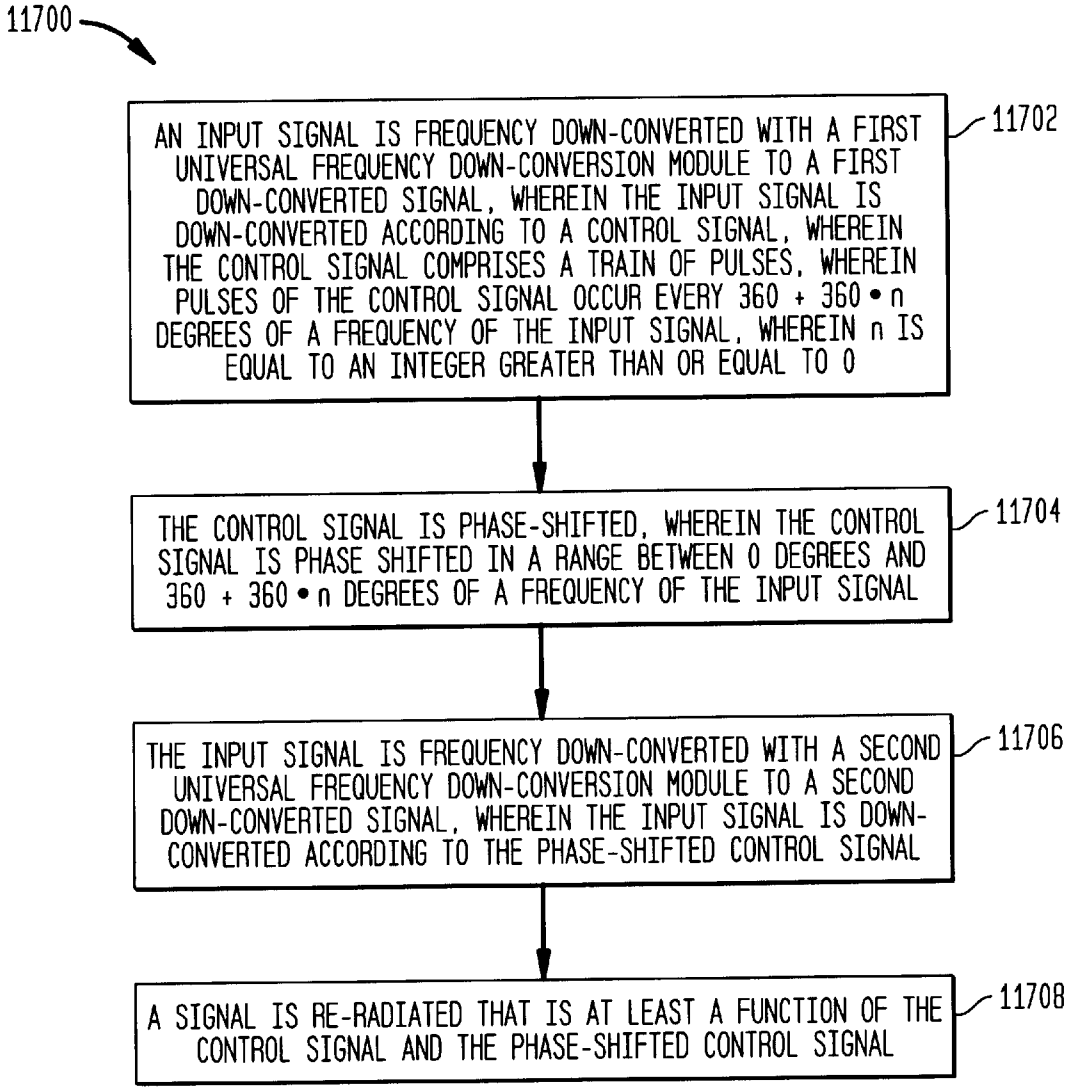
11700
AN INPUT SIGNAL IS FREQUENCY DOWN-CONVERTED WITH A FIRST UNIVERSAL FREQUENCY DOWN-CONVERSION MODULE TO A FIRST DOWN-CONVERTED SIGNAL, WHEREIN THE INPUT SIGNAL IS DOWN-CONVERTED ACCORDING TO A CONTROL SIGNAL, WHEREIN THE CONTROL SIGNAL COMPRISES A TRAIN OF PULSES, WHEREIN PULSES OF THE CONTROL SIGNAL OCCUR EVERY 360 + 360 • n DEGREES OF A FREQUENCY OF THE INPUT SIGNAL, WHEREIN n IS EQUAL TO AN INTEGER GREATER THAN OR EQUAL TO 0
11702
THE CONTROL SIGNAL IS PHASE-SHIFTED, WHEREIN THE CONTROL SIGNAL IS PHASE SHIFTED IN A RANGE BETWEEN 0 DEGREES AND 360 + 360 • n DEGREES OF A FREQUENCY OF THE INPUT SIGNAL
11704
THE INPUT SIGNAL IS FREQUENCY DOWN-CONVERTED WITH A SECOND UNIVERSAL FREQUENCY DOWN-CONVERSION MODULE TO A SECOND DOWN-CONVERTED SIGNAL, WHEREIN THE INPUT SIGNAL IS DOWN-CONVERTED ACCORDING TO THE PHASE-SHIFTED CONTROL SIGNAL
11706
A SIGNAL IS RE-RADIATED THAT IS AT LEAST A FUNCTION OF THE CONTROL SIGNAL AND THE PHASE-SHIFTED CONTROL SIGNAL
11708

FIG. 118A

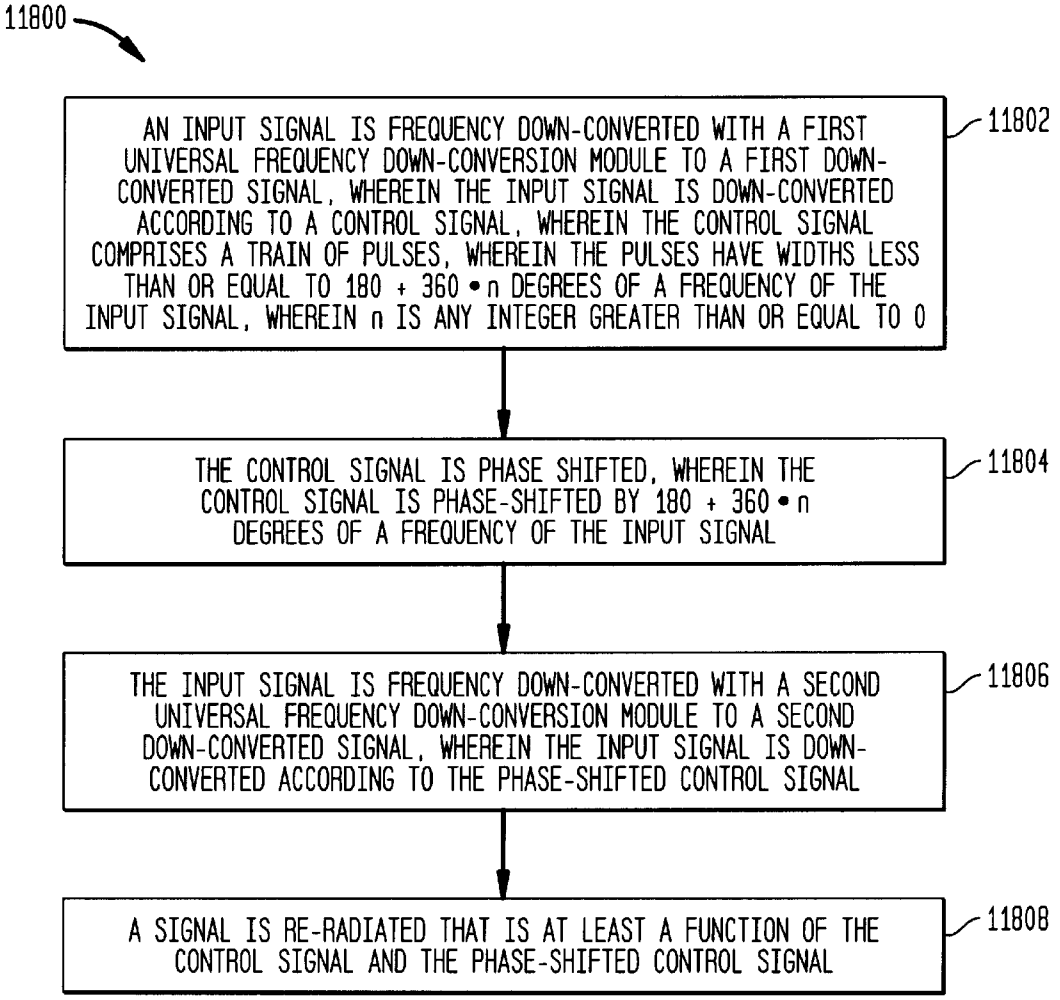
11800
AN INPUT SIGNAL IS FREQUENCY DOWN-CONVERTED WITH A FIRST UNIVERSAL FREQUENCY DOWN-CONVERSION MODULE TO A FIRST DOWN-CONVERTED SIGNAL, WHEREIN THE INPUT SIGNAL IS DOWN-CONVERTED ACCORDING TO A CONTROL SIGNAL, WHEREIN THE CONTROL SIGNAL COMPRISES A TRAIN OF PULSES, WHEREIN THE PULSES HAVE WIDTHS LESS THAN OR EQUAL TO 180 + 360 • n DEGREES OF A FREQUENCY OF THE INPUT SIGNAL, WHEREIN n IS ANY INTEGER GREATER THAN OR EQUAL TO 0
11802
THE CONTROL SIGNAL IS PHASE SHIFTED, WHEREIN THE CONTROL SIGNAL IS PHASE-SHIFTED BY 180 + 360 • n DEGREES OF A FREQUENCY OF THE INPUT SIGNAL
11804
THE INPUT SIGNAL IS FREQUENCY DOWN-CONVERTED WITH A SECOND UNIVERSAL FREQUENCY DOWN-CONVERSION MODULE TO A SECOND DOWN-CONVERTED SIGNAL, WHEREIN THE INPUT SIGNAL IS DOWN-CONVERTED ACCORDING TO THE PHASE-SHIFTED CONTROL SIGNAL
11806
A SIGNAL IS RE-RADIATED THAT IS AT LEAST A FUNCTION OF THE CONTROL SIGNAL AND THE PHASE-SHIFTED CONTROL SIGNAL
11808

FIG. 118B

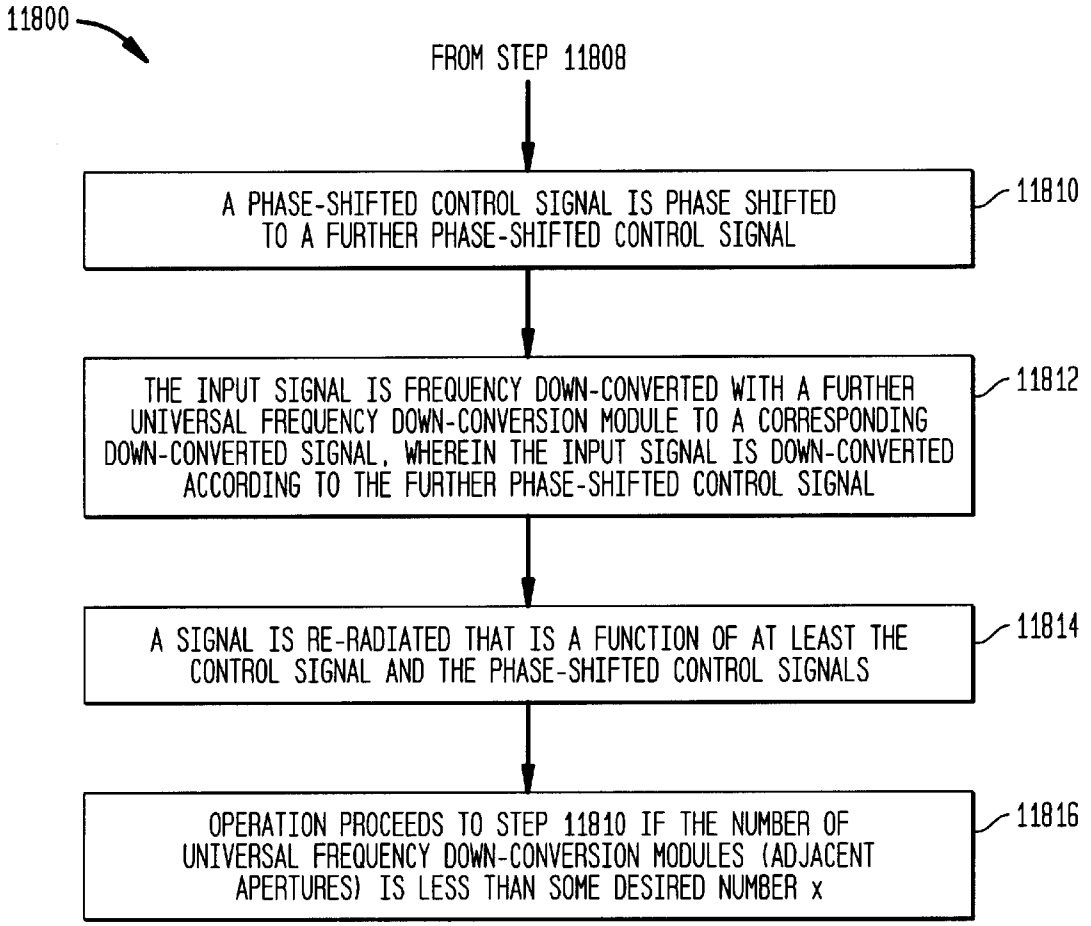
11800
FROM STEP 11808
A PHASE-SHIFTED CONTROL SIGNAL IS PHASE SHIFTED TO A FURTHER PHASE-SHIFTED CONTROL SIGNAL
11810
THE INPUT SIGNAL IS FREQUENCY DOWN-CONVERTED WITH A FURTHER UNIVERSAL FREQUENCY DOWN-CONVERSION MODULE TO A CORRESPONDING DOWN-CONVERTED SIGNAL, WHEREIN THE INPUT SIGNAL IS DOWN-CONVERTED ACCORDING TO THE FURTHER PHASE-SHIFTED CONTROL SIGNAL
11812
A SIGNAL IS RE-RADIATED THAT IS A FUNCTION OF AT LEAST THE CONTROL SIGNAL AND THE PHASE-SHIFTED CONTROL SIGNALS
11814
OPERATION PROCEEDS TO STEP 11810 IF THE NUMBER OF UNIVERSAL FREQUENCY DOWN-CONVERSION MODULES (ADJACENT APERTURES) IS LESS THAN SOME DESIRED NUMBER x
11816

FIG. 119

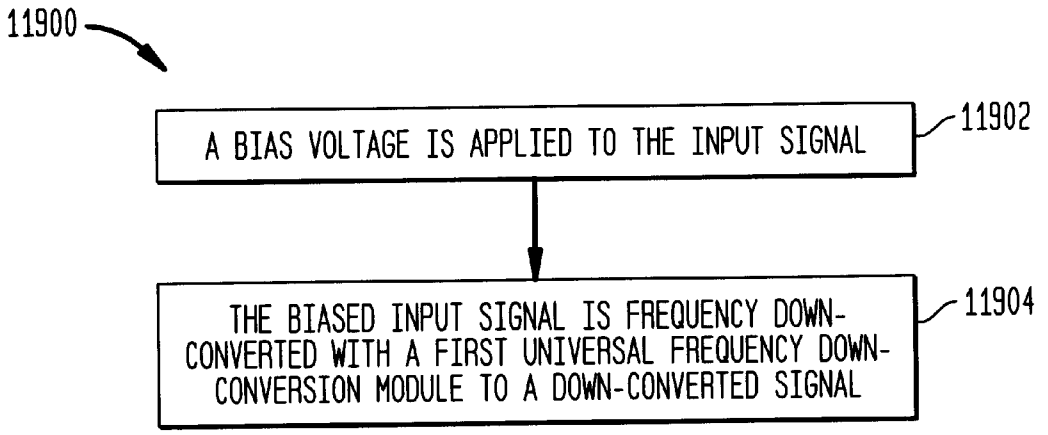
11900
A BIAS VOLTAGE IS APPLIED TO THE INPUT SIGNAL
11902
THE BIASED INPUT SIGNAL IS FREQUENCY DOWN-CONVERTED WITH A FIRST UNIVERSAL FREQUENCY DOWN-CONVERSION MODULE TO A DOWN-CONVERTED SIGNAL
11904

FIG. 120

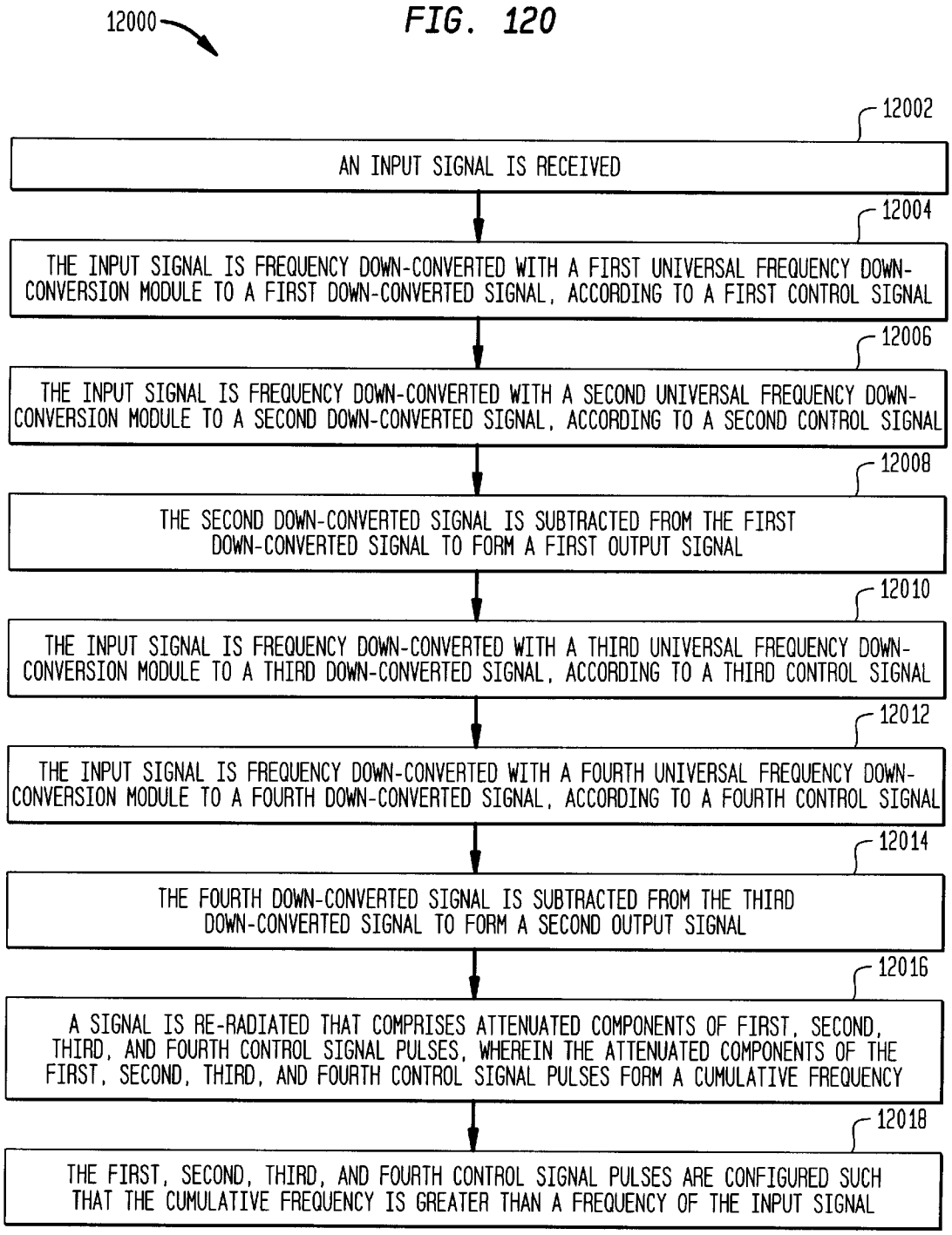
12000
12002
AN INPUT SIGNAL IS RECEIVED
12004
THE INPUT SIGNAL IS FREQUENCY DOWN-CONVERTED WITH A FIRST UNIVERSAL FREQUENCY DOWN-CONVERSION MODULE TO A FIRST DOWN-CONVERTED SIGNAL, ACCORDING TO A FIRST CONTROL SIGNAL
12006
THE INPUT SIGNAL IS FREQUENCY DOWN-CONVERTED WITH A SECOND UNIVERSAL FREQUENCY DOWN-CONVERSION MODULE TO A SECOND DOWN-CONVERTED SIGNAL, ACCORDING TO A SECOND CONTROL SIGNAL
12008
THE SECOND DOWN-CONVERTED SIGNAL IS SUBTRACTED FROM THE FIRST DOWN-CONVERTED SIGNAL TO FORM A FIRST OUTPUT SIGNAL
12010
THE INPUT SIGNAL IS FREQUENCY DOWN-CONVERTED WITH A THIRD UNIVERSAL FREQUENCY DOWN-CONVERSION MODULE TO A THIRD DOWN-CONVERTED SIGNAL, ACCORDING TO A THIRD CONTROL SIGNAL
12012
THE INPUT SIGNAL IS FREQUENCY DOWN-CONVERTED WITH A FOURTH UNIVERSAL FREQUENCY DOWN-CONVERSION MODULE TO A FOURTH DOWN-CONVERTED SIGNAL, ACCORDING TO A FOURTH CONTROL SIGNAL
12014
THE FOURTH DOWN-CONVERTED SIGNAL IS SUBTRACTED FROM THE THIRD DOWN-CONVERTED SIGNAL TO FORM A SECOND OUTPUT SIGNAL
12016
A SIGNAL IS RE-RADIATED THAT COMPRISES ATTENUATED COMPONENTS OF FIRST, SECOND, THIRD, AND FOURTH CONTROL SIGNAL PULSES, WHEREIN THE ATTENUATED COMPONENTS OF THE FIRST, SECOND, THIRD, AND FOURTH CONTROL SIGNAL PULSES FORM A CUMULATIVE FREQUENCY
12018
THE FIRST, SECOND, THIRD, AND FOURTH CONTROL SIGNAL PULSES ARE CONFIGURED SUCH THAT THE CUMULATIVE FREQUENCY IS GREATER THAN A FREQUENCY OF THE INPUT SIGNAL

DC OFFSET, RE-RADIATION, AND I/Q SOLUTIONS USING UNIVERSAL FREQUENCY TRANSLATION TECHNOLOGY

This application claims priority to the following: U.S. Provisional Application No. 60/171,502, filed Dec. 22, 1999; U.S. Provisional Application No. 60/177,705, filed on Jan. 24, 2000; U.S. Provisional Application No. 60/129,839, filed on Apr. 16, 1999; U.S. Provisional Application No. 60/158,047, filed on Oct. 7, 1999; U.S. Provisional Application No. 60/171,349, filed on Dec. 21, 1999; U.S. Provisional Application No.60/177,702, filed on Jan. 24, 2000; U.S. Provisional Application No. 60/180,667, filed on Feb. 7, 2000; and U.S. Provisional Application No. 60/171,496, filed on Dec. 22, 1999, all of which are incorporated by reference herein in their entireties.

CROSS-REFERENCE TO OTHER APPLICATIONS

The following applications of common assignee are related to the present application, and are herein incorporated by reference in their entireties:

"Method and System for Down-Converting Electromagnetic Signals," Ser. No. 09/176,022, filed Oct. 21, 1998.

"Method and System for Frequency Up-Conversion," Ser. No. 09/176,154, filed Oct. 21, 1998.

"Method and System for Ensuring Reception of a Communications Signal," Ser. No. 09/176,415, filed Oct. 21, 1998.

"Integrated Frequency Translation And Selectivity," Ser. No. 09/175,966, filed Oct.21, 1998.

"Applications of Universal Frequency Translation," Ser. No. 09/261,129, filed Mar. 3, 1999.

"Method and System for Down-Converting Electromagnetic Signals Having Optimized Switch Structures," Ser. No. 09/293,095, filed Apr. 16, 1999.

"Method and System for Down-Converting Electromagnetic Signals Including Resonant Structures for Enhanced Energy Transfer," Ser. No. 09/293,342, filed Apr. 16, 1999.

"Method and System for Frequency Up-Conversion with a Variety of Transmitter Configurations," Ser. No. 09/293,580, filed Apr. 16, 1999.

"Integrated Frequency Translation and Selectivity with a Variety of Filter Embodiments," Ser. No. 09/293,283, filed Apr. 16, 1999.

"Matched Filter Characterization and Implementation of Universal Frequency Translation Method and Apparatus," Ser. No. 09/521,878, filed Mar. 9, 2000.

BACKGROUND OF THE INVENTION

1. Field of the Invention

The present invention relates to down-conversion and up-conversion of electromagnetic (EM) signals. More particularly, the present invention relates to reducing or eliminating DC offset voltages and re-radiation that occurs during down-conversion of EM signals to intermediate frequency or baseband signals.

2. Related Art

Electromagnetic (EM) information signals (baseband signals) include, but are not limited to, video baseband signals, voice baseband signals, computer baseband signals, etc. Baseband signals include analog baseband signals and digital baseband signals.

It is often beneficial to propagate EM signals at higher frequencies. This is generally true regardless of whether the propagation medium is wire, optic fiber, space, air, liquid, etc. To enhance efficiency and practicality, such as improved ability to radiate and added ability for multiple channels of baseband signals, up-conversion to a higher frequency is utilized. Conventional up-conversion processes modulate higher frequency carrier signals with baseband signals. Modulation refers to a variety of techniques for impressing information from the baseband signals onto the higher frequency carrier signals. The resultant signals are referred to herein as modulated carrier signals. For example, the amplitude of an AM carrier signal varies in relation to changes in the baseband signal, the frequency of an FM carrier signal varies in relation to changes in the baseband signal, and the phase of a PM carrier signal varies in relation to changes in the baseband signal.

In order to process the information that was in the baseband signal, the information must be extracted, or demodulated, from the modulated carrier signal. However, because conventional signal processing technology is limited in operational speed, conventional signal processing technology cannot easily demodulate a baseband signal from higher frequency modulated carrier signal directly. Instead, higher frequency modulated carrier signals must be down-converted to an intermediate frequency (IF), from where a conventional demodulator can demodulate the baseband signal.

Conventional down-converters include electrical components whose properties are frequency dependent. As a result, conventional down-converters are designed around specific frequencies or frequency ranges and do not work well outside their designed frequency range.

Conventional down-converters generate unwanted image signals and thus must include filters for filtering the unwanted image signals. However, such filters reduce the power level of the modulated carrier signals. As a result, conventional down-converters include power amplifiers, which require external energy sources.

When a received modulated carrier signal is relatively weak, as in, for example, a radio receiver, conventional down-converters include additional power amplifiers, which require additional external energy.

SUMMARY OF THE INVENTION

Briefly stated, the present invention is directed to methods, systems, and apparatuses for down-converting an electromagnetic (EM) signal by aliasing the EM signal, and applications thereof. The present invention is further directed to reducing or eliminating DC offset voltages and re-radiation generated when down-converting an electromagnetic (EM) signal. The present invention is still further directed to improving receiver dynamic range.

Generally, the invention operates by receiving an EM signal. The invention also receives an aliasing signal having an aliasing rate. The invention aliases the EM signal according to the aliasing signal to down-convert the EM signal.

In an embodiment, the invention down-converts the EM signal to an intermediate frequency (IF) signal.

In another embodiment, the invention down-converts the EM signal to a demodulated baseband information signal.

In another embodiment, the EM signal is a frequency modulated (FM) signal, which is down-converted to a non-FM signal, such as a phase modulated (PM) signal or an amplitude modulated (AM) signal.

In another embodiment, the EM signal is an I/Q modulated signal, which is down-converted to an in-phase information signal and a quadrature-phase information signal.

The invention is applicable to any type of EM signal, including but not limited to, modulated carrier signals (the invention is applicable to any modulation scheme or combination thereof) and unmodulated carrier signals.

Further features and advantages of the invention, as well as the structure and operation of various embodiments of the invention, are described in detail below with reference to the accompanying drawings. In the drawings, like reference numbers generally indicate identical, functionally similar, and/or structurally similar elements. The drawing in which an element first appears is generally indicated by the left-most digit(s) in the corresponding reference number.

BRIEF DESCRIPTION OF THE FIGURES

The invention shall be described with reference to the accompanying figures, wherein:

FIG. **1**A is a block diagram of a universal frequency translation (UFT) module according to an embodiment of the invention.

FIG. **1**B is a more detailed diagram of a universal frequency translation (UFT) module according to an embodiment of the invention.

FIG. **1**C, illustrates a UFT module used in a universal frequency down-conversion (UFD) module according to an embodiment of the invention.

FIG. **1**D illustrates a UFT module used in a universal frequency up-conversion (UFU) module according to an embodiment of the invention.

FIG. **2** is a block diagram of a universal frequency translation (UFT) module according to an alternative embodiment of the invention.

FIG. **3** is a block diagram of a universal frequency up-conversion (UFU) module according to an embodiment of the invention.

FIG. **4** is a more detailed diagram of a universal frequency up-conversion (UFU) module according to an embodiment of the invention.

FIG. **5** is a block diagram of a universal frequency up-conversion (UFU) module according to an alternative embodiment of the invention.

FIGS. **6**A–**6**I illustrate example waveforms used to describe the operation of the UFU module.

FIG. **7** illustrates a UFT module used in a receiver according to an embodiment of the invention.

FIG. **8** illustrates a UFT module used in a transmitter according to an embodiment of the invention.

FIG. **9** illustrates an environment comprising a transmitter and a receiver, each of which may be implemented using a UFT module of the invention.

FIG. **10** illustrates a transceiver according to an embodiment of the invention.

FIG. **11** illustrates a transceiver according to an alternative embodiment of the invention.

FIG. **12** illustrates an environment comprising a transmitter and a receiver, each of which may be implemented using enhanced signal reception (ESR) components of the invention.

FIG. **13** illustrates a UFT module used in a unified down-conversion and filtering (UDF) module according to an embodiment of the invention.

FIG. **14** illustrates an example receiver implemented using a UDF module according to an embodiment of the invention.

FIGS. **15**A–**15**F illustrate example applications of the UDF module according to embodiments of the invention.

FIG. **16** illustrates an environment comprising a transmitter and a receiver, each of which may be implemented using enhanced signal reception (ESR) components of the invention, wherein the receiver may be further implemented using one or more UFD modules of the invention.

FIG. **17** illustrates a unified down-converting and filtering (UDF) module according to an embodiment of the invention.

FIG. **18** is a table of example values at nodes in the UDF module of FIG. **17**.

FIG. **19** is a detailed diagram of an example UDF module according to an embodiment of the invention.

FIGS. **20**A and **20**G are example aliasing modules according to embodiments of the invention.

FIGS. **20**B–**20**F are example waveforms used to describe the operation of the aliasing modules of FIGS. **20**A and **20**G.

FIG. **21** illustrates an enhanced signal reception system according to an embodiment of the invention.

FIGS. **22**A–**22**F are example waveforms used to describe the system of FIG. **21**.

FIG. **23**A illustrates an example transmitter in an enhanced signal reception system according to an embodiment of the invention.

FIGS. **23**B and **23**C are example waveforms used to further describe the enhanced signal reception system according to an embodiment of the invention.

FIG. **23**D illustrates another example transmitter in an enhanced signal reception system according to an embodiment of the invention.

FIGS. **23**E and **23**F are example waveforms used to further describe the enhanced signal reception system according to an embodiment of the invention.

FIG. **24**A illustrates an example receiver in an enhanced signal reception system according to an embodiment of the invention.

FIGS. **24**B–**24**J are example waveforms used to further describe the enhanced signal reception system according to an embodiment of the invention.

FIG. **25** illustrates are exemplary I/Q modulation receiver, according to an embodiment of the present invention.

FIG. **26** illustrates a I/Q modulation control signal generator, according to an embodiment of the present invention.

FIG. **27** illustrates example waveforms related to the I/Q modulation control signal generator of FIG. **26**.

FIG. **28** illustrates example control signal waveforms overlaid upon an input RF signal.

FIG. **29** illustrates a I/Q modulation receiver circuit diagram, according to an embodiment of the present invention.

FIGS. **30**–**40** illustrate example waveforms related to the receiver of FIG. **29**.

FIG. **41** illustrates a single channel receiver, according to an embodiment of the present invention.

FIG. **42** illustrates an alternative I/Q modulation receiver, according to an embodiment of the present invention.

FIG. **43** illustrates an I/Q modulation transmitter, according to an embodiment of the present invention.

FIG. **44**A illustrates an example antenna that transmits re-radiation.

FIGS. **44**B–D illustrates example signals and frequency spectrums related to re-radiation effects.

FIGS. **45**A–D illustrate example implementations of a switch module according to embodiments of the invention.

FIGS. **46**A–D illustrate example aperture generators.

FIG. **46**E illustrates an oscillator according to an embodiment of the present invention.

FIG. **47** illustrates an energy transfer system with an optional energy transfer signal module according to an embodiment of the invention.

FIG. **48** illustrates an aliasing module with input and output impedance match according to an embodiment of the invention.

FIG. **49**A illustrates an example pulse generator.

FIGS. **49**B and C illustrate example waveforms related to the pulse generator of FIG. **49**A.

FIG. **50** illustrates an example energy transfer module with a switch module and a reactive storage module according to an embodiment of the invention.

FIGS. **51**A–B illustrate example energy transfer systems according to embodiments of the invention.

FIG. **52**A illustrates an example energy transfer signal module according to an embodiment of the present invention.

FIG. **52**B illustrates a flowchart of state machine operation according to an embodiment of the present invention.

FIG. **52**C is an example energy transfer signal module.

FIG. **53** is a schematic diagram of a circuit to down-convert a 915 MHZ signal to a 5 MHZ signal using a 101.1 MHZ clock according to an embodiment of the present invention.

FIG. **54** shows example simulation waveforms for the circuit of FIG. **53** according to embodiments of the present invention.

FIG. **55** is a schematic diagram of a circuit to down-convert a 915 MHZ signal to a 5 MHZ signal using a 101.1 MHZ clock according to an embodiment of the present invention.

FIG. **56** shows example simulation waveforms for the circuit of FIG. **55** according to embodiments of the present invention.

FIG. **57** is a schematic diagram of a circuit to down-convert a 915 MHZ signal to a 5 MHZ signal using a 101.1 MHZ clock according to an embodiment of the present invention.

FIG. **58** shows example simulation waveforms for the circuit of FIG. **57** according to an embodiment of the present invention.

FIG. **59** shows a schematic of the circuit in FIG. **53** connected to an FSK source that alternates between 913 and 917 MHZ at a baud rate of 500 Kbaud according to an embodiment of the present invention.

FIG. **60**A illustrates an example energy transfer system according to an embodiment of the invention.

FIGS. **60**B–C illustrate example timing diagrams for the example system of FIG. **60**A.

FIG. **61** illustrates an example bypass network according to an embodiment of the invention.

FIG. **62** illustrates an example bypass network according to an embodiment of the invention.

FIG. **63** illustrates an example embodiment of the invention.

FIG. **64**A illustrates an example real time aperture control circuit according to an embodiment of the invention.

FIG. **64**B illustrates a timing diagram of an example clock signal for real time aperture control, according to an embodiment of the invention.

FIG. **64**C illustrates a timing diagram of an example optional enable signal for real time aperture control, according to an embodiment of the invention.

FIG. **64**D illustrates a timing diagram of an inverted clock signal for real time aperture control, according to an embodiment of the invention.

FIG. **64**E illustrates a timing diagram of an example delayed clock signal for real time aperture control, according to an embodiment of the invention.

FIG. **64**F illustrates a timing diagram of an example energy transfer including pulses having apertures that are controlled in real time, according to an embodiment of the invention.

FIG. **65** illustrates an example embodiment of the invention.

FIG. **66** illustrates an example embodiment of the invention.

FIG. **67** illustrates an example embodiment of the invention.

FIG. **68** illustrates an example embodiment of the invention.

FIG. **69**A is a timing diagram for the example embodiment of FIG. **65**.

FIG. **69**B is a timing diagram for the example embodiment of FIG. **66**.

FIG. **70**A is a timing diagram for the example embodiment of FIG. **67**.

FIG. **70**B is a timing diagram for the example embodiment of FIG. **68**.

FIG. **71**A illustrates and example embodiment of the invention.

FIG. **71**B illustrates example equations for determining charge transfer, in accordance with the present invention.

FIG. **71**C illustrates relationships between capacitor charging and aperture, in accordance with an embodiment of the present invention.

FIG. **71**D illustrates relationships between capacitor charging and aperture, in accordance with an embodiment of the present invention.

FIG. **71**E illustrates power-charge relationship equations, in accordance with an embodiment of the present invention.

FIG. **71**F illustrates insertion loss equations, in accordance with an embodiment of the present invention.

FIG. **72** shows the original FSK waveform **5902** and the down-converted waveform **5904**.

FIG. **73** illustrates a down-converter according to an embodiment of the present invention, showing some DC offset contributions.

FIG. **74** illustrates a down-converter according to an embodiment of the present invention, that removes at least some DC offset contributions.

FIGS. **75** and **76** illustrate circuit diagrams according to embodiments of the present invention.

FIG. **77**A illustrates an example clock pulse train.

FIG. **77**B illustrates an example clock frequency spectrum.

FIG. **78** illustrates a circuit diagram according to an embodiment of the present invention, which may be used to measure DC offsets.

FIGS. **79** and **80** illustrate example output offset plots for the circuit diagram of FIG. **78**, for a variety of clock signals.

FIGS. **81** and 82 show example output offset plots obtained for the circuit model of FIG. **78**, with variations in the bond wire inductance.

FIG. **83** illustrates example V_{OCI} response for a variety of clock signal rise and fall times.

FIGS. **84**A, **84**B, **85**A and **85**B show the results on an I port of an I/Q receiver according to an embodiment of the present invention, for a variety of LO drive levels and 3 operating channels, for two different assemblies.

FIG. **86**A illustrates example complimentary architecture output offset for a variety of clock signal pulse widths.

FIG. **86**B shows an example spectral plot of a carrier tone at RF, corresponding to LO re-radiation at a UFD module.

FIG. **86**C illustrates the LO re-radiation spectrum shown in FIG. **86**B after modulation by an example modified maximal length linear PN sequence.

FIG. **86**D shows an example PN modulated output of a UFD module.

FIG. **86**E illustrates the result of FIG. **86**D after PN rectification or correlation.

FIG. **86**F illustrates the result of FIG. **86**E after low pass filtering to recover the baseband beat note.

FIG. **86**G illustrates an exemplary signal input harmonic spectrum and conversion clock harmonic spectrum.

FIG. **86**H illustrates an exemplary power series.

FIG. **86**I illustrates an exemplary system block diagram, according to an embodiment of the present invention.

FIG. **87** shows a conventional wireless communications down-conversion system.

FIG. **88**A shows an exemplary down-conversion system that reduces output DC offset, according to an embodiment of the present invention.

FIGS. **88**B–H show example waveforms related to the system of FIG. **88**A, according to an embodiment of the present invention.

FIG. **89** shows an exemplary down-conversion system that reduces output DC offset, according to an embodiment of the present invention.

FIG. **90** illustrates some aspects of charge injection related to the present invention.

FIG. **91** illustrates an exemplary circuit configuration for reducing DC offset voltage caused by charge injection, according to an embodiment of the present invention.

FIG. **92**A illustrates an exemplary down-conversion system, according to an embodiment of the present invention, that may be used to indicate potential points in a signal path where DC offset voltages may be injected.

FIG. **92**B illustrates an exemplary auto-zero compensation circuit for reducing or eliminating DC offset inserted by circuit components, according to an embodiment of the present invention.

FIG. **93** illustrates an exemplary differential DC offset voltage cancellation circuit, according to an embodiment of the present invention.

FIG. **94**A illustrates a second exemplary differential DC offset voltage cancellation circuit, according to an embodiment of the present invention.

FIGS. **94**B–H illustrate example waveforms related to the circuit of FIG. **94**A, according to an embodiment of the present invention.

FIG. **95** illustrates an exemplary differential receiver circuit, according to an embodiment of the present invention.

FIG. **96** illustrates an exemplary input RF signal and exemplary control signal waveforms, according to embodiments of the present invention.

FIG. **97** illustrates an exemplary I/Q modulation receiver circuit, according to an embodiment of the present invention.

FIGS. **98**A–**98**I show an exemplary input RF I/Q signal, and several exemplary control signal waveforms.

FIG. **99** illustrates an exemplary buffered I/Q modulation receiver circuit, according to an embodiment of the present invention.

FIG. **100** illustrates an exemplary receiver with a placebo circuit, according to an embodiment of the present invention.

FIG. **101** shows an exemplary control signal waveform, and a corresponding exemplary placebo control signal waveform.

FIG. **102** illustrates a receiver with adjacent apertures circuit, according to an embodiment of the present invention.

FIG. **103** shows an exemplary control signal waveform, and a corresponding π-shifted control signal waveform.

FIG. **104** illustrates an exemplary receiver with adjacent apertures circuit, according to an embodiment of the present invention.

FIG. **105** illustrates an exemplary circuit for improving dynamic range, according to an embodiment of the present invention.

FIGS. **106**A–C illustrate exemplary waveforms related to improving dynamic range.

FIG. **107** illustrates an exemplary bias circuit, according to an embodiment of the present invention.

FIG. **108** depicts a flowchart that illustrates operational steps for down-converting and spectrally spreading an input signal, according to an embodiment of the present invention.

FIG. **109** depicts a flowchart that illustrates operational steps for down-converting an input signal and reducing a DC offset voltage, according to an embodiment of the present invention.

FIG. **110** depicts a flowchart that illustrates operational steps for reducing DC offset in a signal path, according to an embodiment of the present invention.

FIG. **111** depicts a flowchart that illustrates operational steps for down-converting an input signal and canceling DC offset voltages, according to an embodiment of the present invention.

FIG. **112** depicts a flowchart that illustrates operational steps for down-converting an input signal and canceling DC offset voltages, according to an embodiment of the present invention.

FIG. **113** depicts a flowchart that illustrates operational steps for differentially down-converting an input signal, according to an embodiment of the present invention.

FIG. **114** depicts a flowchart that illustrates operational steps for down-converting an input signal with a variety of control signal pulse widths, according to an embodiment of the present invention.

FIG. **115** depicts a flowchart that illustrates operational steps for down-converting an RF I/Q modulated input signal, according to an embodiment of the present invention.

FIG. **116** depicts a flowchart that illustrates operational steps for down-converting an RF I/Q modulated input signal, according to an embodiment of the present invention.

FIG. **117** depicts a flowchart that illustrates operational steps for down-converting an input signal and altering circuit re-radiation, according to an embodiment of the present invention.

FIG. **118**A–B depict flowcharts that illustrate operational steps for down-converting an input signal and altering circuit re-radiation, according to an embodiment of the present invention.

FIGS. **119** depicts a flowchart that illustrates operational steps for improving dynamic range, according to an embodiment of the present invention.

FIG. **120** depicts a flowchart that illustrates operational steps for down-converting a RF I/Q modulated signal and reducing DC offset voltages, according to an embodiment of the present invention.

DETAILED DESCRIPTION OF THE PREFERRED EMBODIMENTS

Table of Contents

1. Overview of the Invention
2. Universal Frequency Translation
3. Frequency Down-conversion
3.1 Optional Energy Transfer Signal Module
3.2 Smoothing the Down-Converted Signal
3.3 Impedance Matching
3.4 Tanks and Resonant Structures
3.5 Charge and Power Transfer Concepts
3.6 Optimizing and Adjusting the Non-Negligible Aperture Width/Duration
3.6.1 Varying Input and Output Impedances
3.6.2 Real Time Aperture Control
3.7 Adding a Bypass Network
3.8 Modifying the Energy Transfer Signal Utilizing Feedback
3.9 Other Implementations
3.10 Example Energy Transfer Down-Converters
4. Frequency Up-conversion
5. Enhanced Signal Reception
6. Unified Down-conversion and Filtering
7. Example Application Embodiments of the Invention
7.0 DC Offset, Re-radiation, and Dynamic Range Considerations and Corrections
7.1 Overview of DC Offset and Re-radiation
7.1.1 Introduction
7.1.2 A Basic DC Offset Model
7.1.3 Clock Modulation via PN Code
7.1.3.1 Interpretation of $R_{xx}(T)$ and Required Leakage
7.1.3.2 Charge Injected DC Offset
7.1.3.3 Clock Waveform Impact on CI Induced Offsets
7.1.3.4 Bench Example
7.1.3.5 Complementary Architecture
7.1.3.6 Spreading Code Results
7.1.4 UFD Module DC Offsets from Non-Linearities
7.2 Example Embodiments to Address DC Offset and Re-radiation Problems
7.2.1 DC Offset
7.2.1.1 Reducing DC Offset by Spectral Spreading and De-spreading
7.2.1.1.1 Conventional Wireless Communications Receiver
7.2.1.1.2 Spread/De-spread Receiver Embodiment of the Present Invention
7.2.1.3 Charge Injection Reduction Embodiment
7.2.1.4 Auto-Zero Compensation
7.2.1.5 Reducing DC Offset with Differential Configurations
7.2.1.6 Reducing DC Offset with Differential Outputs
7.2.2 Re-radiation
7.2.2.1 Reducing Re-radiation by Adjusting Control Signal Attributes
7.2.2.1.1 I/Q Modulation Receiver Control Signal Considerations and Embodiments
7.2.2.1.1.1 Non-overlapping I/Q Control Signal Pulses Embodiments
7.2.2.1.1.2 Buffered I/Q Modulation Receiver Embodiment
7.2.2.2 Reducing Re-radiation with Placebo Down-conversion Modules
7.2.2.3 Reducing Re-radiation with Adjacent Apertures
7.2.3 Additional DC Offset and Re-radiation Reduction Embodiments
7.3 Example Embodiments to-Improve Dynamic Range
7.3.1 Adjusting Down-conversion Module Dynamic Range
7.4 Example Receiver and Transmitter Embodiments for Addressing DC Offset and Re-radiation
7.4.1 Example I/Q Modulation Receiver Embodiments
7.4.1.1 Example I/Q Modulation Control Signal Generator Embodiments
7.4.1.2 Detailed Example I/Q Modulation Receiver Embodiment with Exemplary Waveforms
7.4.1.3 Example Single Channel Receiver Embodiment
7.4.1.4 Alternative Example I/Q Modulation Receiver Embodiment
7.4.1.5 Example Transmitter Embodiment
8. Conclusion

1. OVERVIEW OF THE INVENTION

The present invention is directed to receivers implemented using universal frequency translation (UFT) modules. The UFT modules perform frequency translation operations. Embodiments of the present invention incorporating various applications of the UFT module are described below.

Receivers exhibit multiple advantages by using UFT modules. These advantages include, but are not limited to, lower power consumption, longer power source life, fewer parts, lower required package size, lower package weight, lower cost, less tuning, and more effective signal transmission and reception. The receivers of the present invention can receive and transmit signals across a broad frequency range. Furthermore, the DC offset voltages and re-radiation generated by receivers are the present invention are reduced or eliminated in embodiments. The structure and operation of embodiments of the UFT module, and various applications of the same, utilizing DC offset/re-radiation reduction, are described in detail in the following sections.

2. UNIVERSAL FREQUENCY TRANSLATION

The present invention is related to frequency translation, and applications of same. Such applications include, but are not limited to, frequency down-conversion, frequency up-conversion, enhanced signal reception, unified down-conversion and filtering, and combinations and applications of same.

FIG. **1**A illustrates a universal frequency translation (UFT) module **102** according to embodiments of the invention. (The UFT module is also sometimes called a universal frequency translator, or a universal translator.)

As indicated by the example of FIG. **1**A, some embodiments of the UFT module **102** include three ports (nodes), designated in FIG. **1**A as Port **1**, Port **2**, and Port **3**. Other UFT embodiments include other than three ports.

Generally, the UFT module **102** (perhaps in combination with other components) operates to generate an output signal from an input signal, where the frequency of the output signal differs from the frequency of the input signal. In other words, the UFT module **102** (and perhaps other components) operates to generate the output signal from the input signal by translating the frequency (and perhaps other characteristics) of the input signal to the frequency (and perhaps other characteristics) of the output signal.

An example embodiment of the UFT module **103** is generally illustrated in FIG. **1**B. Generally, the UFT module **103** includes a switch **106** controlled by a control signal **108**. The switch **106** is said to be a controlled switch.

As noted above, some UFT embodiments include other than three ports. For example, and without limitation, FIG. **2** illustrates an example UFT module **202**. The example UFT module **202** includes a diode **204** having two ports, designated as Port **1** and Port **2**/**3**. This embodiment does not include a third port, as indicated by the dotted line around the "Port **3**" label.

The UFT module is a very powerful and flexible device. Its flexibility is illustrated, in part, by the wide range of applications in which it can be used. Its power is illustrated, in part, by the usefulness and performance of such applications.

For example, a UFT module **115** can be used in a universal frequency down-conversion (UFD) module **114**, an example of which is shown in FIG. **1**C. In this capacity, the UFT module **115** frequency down-converts an input signal to an output signal.

As another example, as shown in FIG. **1**D, a UFT module **117** can be used in a universal frequency up-conversion (UFU) module **116**. In this capacity, the UFT module **117** frequency up-converts an input signal to an output signal.

These and other applications of the UFT module are described below. Additional applications of the UFT module will be apparent to persons skilled in the relevant art(s) based on the teachings contained herein. In some applications, the UFT module is a required component. In other applications, the UFT module is an optional component.

3. FREQUENCY DOWN-CONVERSION

The present invention is directed to systems and methods of universal frequency down-conversion, and applications of same.

In particular, the following discussion describes down-converting using a Universal frequency Translation Module. The down-conversion of an EM signal by aliasing the EM signal at an aliasing rate is fully described in co-pending U.S. Patent Application entitled "Method and System for Down-Converting Electromagnetic Signals," Ser. No. 09/176,022, filed Oct. 21, 1998, the full disclosure of which is incorporated herein by reference. A relevant portion of the above mentioned patent application is summarized below to describe down-converting an input signal to produce a down-converted signal that exists at a lower frequency or a baseband signal.

FIG. **20**A illustrates an aliasing module **2000** for down-conversion using a universal frequency translation (UFT) module **2002** which down-converts an EM input signal **2004**. In particular embodiments, aliasing module **2000** includes a switch **2008** and a capacitor **2010**. The electronic alignment of the circuit components is flexible. That is, in one implementation, the switch **2008** is in series with input signal **2004** and capacitor **2010** is shunted to ground (although it may be other than ground in configurations such as differential mode). In a second implementation (see FIG. **20**G), the capacitor **2010** is in series with the input signal **2004** and the switch **2008** is shunted to ground (although it may be other than ground in configurations such as differential mode). Aliasing module **2000** with UFT module **2002** can be easily tailored to down-convert a wide variety of electromagnetic signals using aliasing frequencies that are well below the frequencies of the EM input signal **2004**.

In one implementation, aliasing module **2000** down-converts the input signal **2004** to an intermediate frequency (IF) signal. In another implementation, the aliasing module **2000** down-converts the input signal **2004** to a demodulated baseband signal. In yet another implementation, the input signal **2004** is a frequency modulated (FM) signal, and the aliasing module **2000** down-converts it to a non-FM signal, such as a phase modulated (PM) signal or an amplitude modulated (AM) signal. Each of the above implementations is described below.

In an embodiment, the control signal **2006** includes a train of pulses that repeat at an aliasing rate that is equal to, or less than, twice the frequency of the input signal **2004**. In this embodiment, the control signal **2006** is referred to herein as an aliasing signal because it is below the Nyquist rate for the frequency of the input signal **2004**. Preferably, the frequency of control signal **2006** is much less than the input signal **2004**.

A train of pulses **2018** as shown in FIG. **20**D controls the switch **2008** to alias the input signal **2004** with the control signal **2006** to generate a down-converted output signal **2012**. More specifically, in an embodiment, switch **2008** closes on a first edge of each pulse **2020** of FIG. **20**D and opens on a second edge of each pulse. When the switch **2008** is closed, the input signal **2004** is coupled to the capacitor **2010**, and charge is transferred from the input signal to the capacitor **2010**. The charge stored during successive pulses forms down-converted output signal **2012**.

Exemplary waveforms are shown in FIGS. **20**B–**20**F.

FIG. **20**B illustrates an analog amplitude modulated (AM) carrier signal **2014** that is an example of input signal **2004**. For illustrative purposes, in FIG. **20**C, an analog AM carrier signal portion **2016** illustrates a portion of the analog AM carrier signal **2014** on an expanded time scale. The analog AM carrier signal portion **2016** illustrates the analog AM carrier signal **2014** from time t_0 to time t_1.

FIG. **20**D illustrates an exemplary aliasing signal **2018** that is an example of control signal **2006**. Aliasing signal **2018** is on approximately the same time scale as the analog AM carrier signal portion **2016**. In the example shown in FIG. **20**D, the aliasing signal **2018** includes a train of pulses **2020** having negligible apertures that tend towards zero (the invention is not limited to this embodiment, as discussed below). The pulse aperture may also be referred to as the pulse width as will be understood by those skilled in the art(s). The pulses **2020** repeat at an aliasing rate, or pulse repetition rate of aliasing signal **2018**. The aliasing rate is determined as described below, and further described in co-pending U.S. Patent Application entitled "Method and

System for Down-converting Electromagnetic Signals," Ser. No. 09/176,022.

As noted above, the train of pulses **2020** (i.e., control signal **2006**) control the switch **2008** to alias the analog AM carrier signal **2016** (i.e., input signal **2004**) at the aliasing rate of the aliasing signal **2018**. Specifically, in this embodiment, the switch **2008** closes on a first edge of each pulse and opens on a second edge of each pulse. When the switch **2008** is closed, input signal **2004** is coupled to the capacitor **2010**, and charge is transferred from the input signal **2004** to the capacitor **2010**. The charge transferred during a pulse is referred to herein as an under-sample. Exemplary under-samples **2022** form down-converted signal portion **2024** (FIG. **20**E) that corresponds to the analog AM carrier signal portion **2016** (FIG. **20**C) and the train of pulses **2020** (FIG. **20**D). The charge stored during successive under-samples of AM carrier signal **2014** form the down-converted signal **2024** (FIG. **20**E) that is an example of down-converted output signal **2012** (FIG. **20**A). In FIG. **20**F, a demodulated baseband signal **2026** represents the demodulated baseband signal **2024** after filtering on a compressed time scale. As illustrated, down-converted signal **2026** has substantially the same "amplitude envelope" as AM carrier signal **2014**. Therefore, FIGS. **20**B–**20**F illustrate down-conversion of AM carrier signal **2014**.

The waveforms shown in FIGS. **20**B–**20**F are discussed herein for illustrative purposes only, and are not limiting. Additional exemplary time domain and frequency domain drawings, and exemplary methods and systems of the invention relating thereto, are disclosed in co-pending U.S. Patent Application entitled "Method and System for Down-converting Electromagnetic Signals," Ser. No. 09/176,022.

The aliasing rate of control signal **2006** determines whether the input signal **2004** is down-converted to an IF signal, down-converted to a demodulated baseband signal, or down-converted from an FM signal to a PM or an AM signal. Generally, relationships between the input signal **2004**, the aliasing rate of the control signal **2006**, and the down-converted output signal **2012** are illustrated below:

(Freq. of input signal **2004**)=n·(Freq. of control signal **2006**)±(Freq. of down-converted output signal **2012**)

For the examples contained herein, only the "+" condition will be discussed. The value of n represents a harmonic or sub-harmonic of input signal **2004** (e.g., n=0.5, 1,2, 3, . . .).

When the aliasing rate of control signal **2006** is off-set from the frequency of input signal **2004**, or off-set from a harmonic or sub-harmonic thereof, input signal **2004** is down-converted to an IF signal. This is because the under-sampling pulses occur at different phases of subsequent cycles of input signal **2004**. As a result, the under-samples form a lower frequency oscillating pattern. If the input signal **2004** includes lower frequency changes, such as amplitude, frequency, phase, etc., or any combination thereof, the charge stored during associated under-samples reflects the lower frequency changes, resulting in similar changes on the down-converted IF signal. For example, to down-convert a 901 MHZ input signal to a 1 MHZ IF signal, the frequency of the control signal **2006** would be calculated as follows:

$$(Freq_{input} - Freq_{IF})/n = Freq_{control}$$

$$(901\ \text{MHZ} - 1\ \text{MHZ})/n = 900/n$$

For n=0.5, 1, 2, 3, 4, etc., the frequency of the control signal **2006** would be substantially equal to 1.8 GHz, 900 MHZ, 450 MHZ, 300 MHZ, 225 MHZ, etc.

Exemplary time domain and frequency domain drawings, illustrating down-conversion of analog and digital AM, PM and FM signals to IF signals, and exemplary methods and systems thereof, are disclosed in co-pending U.S. Patent Application entitled "Method and System for Down-converting Electromagnetic Signals," Ser. No. 09/176,022.

Alternatively, when the aliasing rate of the control signal **2006** is substantially equal to the frequency of the input signal **2004**, or substantially equal to a harmonic or sub-harmonic thereof, input signal **2004** is directly down-converted to a demodulated baseband signal. This is because, without modulation, the under-sampling pulses occur at the same point of subsequent cycles of the input signal **2004**. As a result, the under-samples form a constant output baseband signal. If the input signal **2004** includes lower frequency changes, such as amplitude, frequency, phase, etc., or any combination thereof, the charge stored during associated under-samples reflects the lower frequency changes, resulting in similar changes on the demodulated baseband signal. For example, to directly down-convert a 900 MHZ input signal to a demodulated baseband signal (i.e. zero IF), the frequency of the control signal **2006** would be calculated as follows:

$$(Freq_{input} - Freq_{IF})/n = Freq_{control}$$

$$(901\ \text{MHZ} - 0\ \text{MHZ})/n = 900\ \text{MHZ}/n$$

For n=0.5, 1, 2, 3, 4, etc., the frequency of the control signal **2006** should be substantially equal to 1.8 GHz, 900 MHZ, 450 MHZ, 300 MHZ, 225 MHZ, etc.

Exemplary time domain and frequency domain drawings, illustrating direct down-conversion of analog and digital AM and PM signals to demodulated baseband signals, and exemplary methods and systems thereof, are disclosed in the co-pending U.S. Patent Application entitled "Method and System for Down-converting Electromagnetic Signals," Ser. No. 09/176,022.

Alternatively, to down-convert an input FM signal to a non-FM signal, a frequency within the FM bandwidth must be down-converted to baseband (i.e., zero IF). As an example, to down-convert a frequency shift keying (FSK) signal (a sub-set of FM) to a phase shift keying (PSK) signal (a subset of PM), the mid-point between a lower frequency F_1 and an upper frequency F_2 (that is, $[(F_1+F_2)\div 2]$) of the FSK signal is down-converted to zero IF. For example, to down-convert an FSK signal having F_1 equal to 899 MHZ and F_2 equal to 901 MHZ, to a PSK signal, the aliasing rate of the control signal **2006** would be calculated as follows:

$$\begin{aligned}\text{Frequency of the input} &= (F_1 + F_2) \div 2\\ &= (899\ \text{MHZ} + 901\ \text{MHZ}) \div 2\\ &= 900\ \text{MHZ}\end{aligned}$$

Frequency of the down-converted signal=0 (i.e., baseband)

$$(Freq_{input} - Freq_{IF})/n = Freq_{control}$$

$$(900\ \text{MHZ} - 0\ \text{MHZ})/n = 900\ \text{MHZ}/n$$

For n=0.5, 1, 2, 3, etc., the frequency of the control signal **2006** should be substantially equal to 1.8 GHz, 900 MHZ, 450 MHZ, 300 MHZ, 225 MHZ, etc. The frequency of the down-converted PSK signal is substantially equal to one half the difference between the lower frequency F_1 and the upper frequency F_2.

As another example, to down-convert a FSK signal to an amplitude shift keying (ASK) signal (a subset of AM), either the lower frequency F_1 or the upper frequency F_2 of the FSK signal is down-converted to zero IF. For example, to down-convert an FSK signal having F_1 equal to 900 MHZ and F_2 equal to 901 MHZ, to an ASK signal, the aliasing rate of the control signal **2006** should be substantially equal to:

$$(900\ \text{MHZ} - 0\ \text{MHZ})/n = 900\ \text{MHZ}/n, \text{ or}$$

$$(901\ \text{MHZ} - 0\ \text{MHZ})/n = 901\ \text{MHZ}/n.$$

For the former case of 900 MHZ/n, and for n=0.5, 1, 2, 3, 4, etc., the frequency of the control signal **2006** should be substantially equal to 1.8 GHz, 900 MHZ, 450 MHZ, 300 MHZ, 225 MHZ, etc. For the latter case of 901 MHZ/n, and for n=0.5, 1, 2, 3, 4, etc., the frequency of the control signal **2006** should be substantially equal to 1.802 GHz, 901 MHZ, 450.5 MHZ, 300.333 MHZ, 225.25 MHZ, etc. The frequency of the down-converted AM signal is substantially equal to the difference between the lower frequency F_1 and the upper frequency F_2 (i.e., 1 MHZ).

Exemplary time domain and frequency domain drawings, illustrating down-conversion of FM signals to non-FM signals, and exemplary methods and systems thereof, are disclosed in the co-pending U.S. Patent Application entitled "Method and System for Down-converting Electromagnetic Signals," Ser. No. 09/176,022.

In an embodiment, the pulses of the control signal **2006** have negligible apertures that tend towards zero. This makes the UFT module **2002** a high input impedance device. This configuration is useful for situations where minimal disturbance of the input signal may be desired.

In another embodiment, the pulses of the control signal **2006** have non-negligible apertures that tend away from zero. This makes the UFT module **2002** a lower input impedance device. This allows the lower input impedance of the UFT module **2002** to be substantially matched with a source impedance of the input signal **2004**. This also improves the energy transfer from the input signal **2004** to the down-converted output signal **2012**, and hence the efficiency and signal to noise (s/n) ratio of UFT module **2002**.

Exemplary systems and methods for generating and optimizing the control signal **2006** and for otherwise improving energy transfer and s/n ratio, are disclosed in the co-pending U.S. Patent Application entitled "Method and System for Down-converting Electromagnetic Signals," Ser. No. 09/176,022.

When the pulses of the control signal **2006** have non-negligible apertures, the aliasing module **2000** is referred to interchangeably herein as an energy transfer module or a gated transfer module, and the control signal **2006** is referred to as an energy transfer signal. Exemplary systems and methods for generating and optimizing the control signal **2006** and for otherwise improving energy transfer and/or signal to noise ratio in an energy transfer module are described below.

3.1. Optional Energy Transfer Signal Module

FIG. **47** illustrates an energy transfer system **4701** that includes an optional energy transfer signal module **4702**, which can perform any of a variety of functions or combinations of functions including, but not limited to, generating the energy transfer signal **4506**.

In an embodiment, the optional energy transfer signal module **4702** includes an aperture generator, an example of which is illustrated in FIG. **46**C as an aperture generator **4620**. The aperture generator **4620** generates non-negligible aperture pulses **4626** from an input signal **4624**. The input signal **4624** can be any type of periodic signal, including, but not limited to, a sinusoid, a square wave, a saw-tooth wave, etc. Systems for generating the input signal **4624** are described below.

The width or aperture of the pulses **4626** is determined by delay through the branch **4622** of the aperture generator **4620**. Generally, as the desired pulse width increases, the difficulty in meeting the requirements of the aperture generator **4620** decrease. In other words, to generate non-negligible aperture pulses for a given EM input frequency, the components utilized in the example aperture generator **4620** do not require as fast reaction times as those that are required in an under-sampling system operating with the same EM input frequency.

The example logic and implementation shown in the aperture generator **4620** are provided for illustrative purposes only, and are not limiting. The actual logic employed can take many forms. The example aperture generator **4620** includes an optional inverter **4628**, which is shown for polarity consistency with other examples provided herein.

An example implementation of the aperture generator **4620** is illustrated in FIG. **46**D. Additional examples of aperture generation logic are provided in FIGS. **46**A and **46**B. FIG. **46**A illustrates a rising edge pulse generator **4640**, which generates pulses **4626** on rising edges of the input signal **4624**. FIG. **46**B illustrates a falling edge pulse generator **4650**, which generates pulses **4626** on falling edges of the input signal **4624**.

In an embodiment, the input signal **4624** is generated externally of the energy transfer signal module **4702**, as illustrated in FIG. **47**. Alternatively, the input signal **4724** is generated internally by the energy transfer signal module **4702**. The input signal **4624** can be generated by an oscillator, as illustrated in FIG. **46**E by an oscillator **4630**. The oscillator **4630** can be internal to the energy transfer signal module **4702** or external to the energy transfer signal module **4702**. The oscillator **4630** can be external to the energy transfer system **4701**. The output of the oscillator **4630** may be any periodic waveform.

The type of down-conversion performed by the energy transfer system **4701** depends upon the aliasing rate of the energy transfer signal **4506**, which is determined by the frequency of the pulses **4626**. The frequency of the pulses **4626** is determined by the frequency of the input signal **4624**. For example, when the frequency of the input signal **4624** is substantially equal to a harmonic or a sub-harmonic of the EM signal **4504**, the EM signal **4504** is directly down-converted to baseband (e.g. when the EM signal is an AM signal or a PM signal), or converted from FM to a non-FM signal. When the frequency of the input signal **4624** is substantially equal to a harmonic or a sub-harmonic of a difference frequency, the EM signal **4504** is down-converted to an intermediate signal.

The optional energy transfer signal module **4702** can be implemented in hardware, software, firmware, or any combination thereof.

3.2 Smoothing the Down-Converted Signal

Referring back to FIG. **20**A, the down-converted output signal **2012** may be smoothed by filtering as desired.

3.3. Impedance Matching

The energy transfer module **2000** has input and output impedances generally defined by (1) the duty cycle of the

switch module (i.e., UFT **2002**), and (2) the impedance of the storage module (e.g., capacitor **2010**), at the frequencies of interest (e.g. at the EM input, and intermediate/baseband frequencies).

Starting with an aperture width of approximately ½ the period of the EM signal being down-converted as a preferred embodiment, this aperture width (e.g. the "closed time") can be decreased. As the aperture width is decreased, the characteristic impedance at the input and the output of the energy transfer module increases. Alternatively, as the aperture width increases from ½ the period of the EM signal being down-converted, the impedance of the energy transfer module decreases.

One of the steps in determining the characteristic input impedance of the energy transfer module could be to measure its value. In an embodiment, the energy transfer module's characteristic input impedance is 300 ohms. An impedance matching circuit can be utilized to efficiently couple an input EM signal that has a source impedance of, for example, 50 ohms, with the energy transfer module's impedance of, for example, 300 ohms. Matching these impedances can be accomplished in various manners, including providing the necessary impedance directly or the use of an impedance match circuit as described below.

Referring to FIG. **48**, a specific embodiment using an RF signal as an input, assuming that the impedance **4812** is a relatively low impedance of approximately 50 Ohms, for example, and the input impedance **4816** is approximately 300 Ohms, an initial configuration for the input impedance match module **4806** can include an inductor **5006** and a capacitor **5008**, configured as shown in FIG. **50**. The configuration of the inductor **5006** and the capacitor **5008** is a possible configuration when going from a low impedance to a high impedance. Inductor **5006** and the capacitor **5008** constitute an L match, the calculation of the values which is well known to those skilled in the relevant arts.

The output characteristic impedance can be impedance matched to take into consideration the desired output frequencies. One of the steps in determining the characteristic output impedance of the energy transfer module could be to measure its value. Balancing the very low impedance of the storage module at the input EM frequency, the storage module should have an impedance at the desired output frequencies that is preferably greater than or equal to the load that is intended to be driven (for example, in an embodiment, storage module impedance at a desired 1 MHz output frequency is 2K ohm and the desired load to be driven is 50 ohms). An additional benefit of impedance matching is that filtering of unwanted signals can also be accomplished with the same components.

In an embodiment, the energy transfer module's characteristic output impedance is 2K ohms. An impedance matching circuit can be utilized to efficiently couple the down-converted signal with an output impedance of, for example, 2K ohms, to a load of, for example, 50 ohms. Matching these impedances can be accomplished in various manners, including providing the necessary load impedance directly or the use of an impedance match circuit as described below.

When matching from a high impedance to a low impedance, a capacitor **5014** and an inductor **5016** can be configured as shown in FIG. **50**. The capacitor **5014** and the inductor **5016** constitute an L match, the calculation of the component values being well known to those skilled in the relevant arts.

The configuration of the input impedance match module **4806** and the output impedance match module **4808** are considered to be initial starting points for impedance matching, in accordance with the present invention. In some situations, the initial designs may be suitable without further optimization. In other situations, the initial designs can be optimized in accordance with other various design criteria and considerations.

As other optional optimizing structures and/or components are utilized, their affect on the characteristic impedance of the energy transfer module should be taken into account in the match along with their own original criteria.

3.4 Tanks and Resonant Structures

Resonant tank and other resonant structures can be used to further optimize the energy transfer characteristics of the invention. For example, resonant structures, resonant about the input frequency, can be used to store energy from the input signal when the switch is open, a period during which one may conclude that the architecture would otherwise be limited in its maximum possible efficiency. Resonant tank and other resonant structures can include, but are not limited to, surface acoustic wave (SAW) filters, dielectric resonators, diplexers, capacitors, inductors, etc.

An example embodiment is shown in FIG. **60**A. Two additional embodiments are shown in FIG. **55** and FIG. **63**. Alternate implementations will be apparent to persons skilled in the relevant art(s) based on the teachings contained herein. Alternate implementations fall within the scope and spirit of the present invention. These implementations take advantage of properties of series and parallel (tank) resonant circuits.

FIG. **60**A illustrates parallel tank circuits in a differential implementation. A first parallel resonant or tank circuit consists of a capacitor **6038** and an inductor **6020** (tank**1**). A second tank circuit consists of a capacitor **6034** and an inductor **6036** (tank**2**).

As is apparent to one skilled in the relevant art(s), parallel tank circuits provide:

low impedance to frequencies below resonance;

low impedance to frequencies above resonance; and

high impedance to frequencies at and near resonance.

In the illustrated example of FIG. **60**A, the first and second tank circuits resonate at approximately 920 MHz. At and near resonance, the impedance of these circuits is relatively high. Therefore, in the circuit configuration shown in FIG. **60**A, both tank circuits appear as relatively high impedance to the input frequency of 950 MHz, while simultaneously appearing as relatively low impedance to frequencies in the desired output range of 50 MHz.

An energy transfer signal **6042** controls a switch **6014**. When the energy transfer signal **6042** controls the switch **6014** to open and close, high frequency signal components are not allowed to pass through tank**1** or tank**2**. However, the lower signal components (50 Mhz in this embodiment) generated by the system are allowed to pass through tank**1** and tank**2** with little attenuation. The effect of tank**1** and tank**2** is to further separate the input and output signals from the same node thereby producing a more stable input and output impedance. Capacitors **6018** and **6040** act to store the 50 MHz output signal energy between energy transfer pulses.

Further energy transfer optimization is provided by placing an inductor **6010** in series with a storage capacitor **6012** as shown. In the illustrated example, the series resonant frequency of this circuit arrangement is approximately 1 GHz. This circuit increases the energy transfer characteristic of the system. The ratio of the impedance of inductor **6010**

and the impedance of the storage capacitor **6012** is preferably kept relatively small so that the majority of the energy available will be transferred to storage capacitor **6012** during operation. Exemplary output signals A and B are illustrated in FIGS. **60**B and **60**C, respectively.

In FIG. **60**A, circuit components **6004** and **6006** form an input impedance match. Circuit components **6032** and **6030** form an output impedance match into a 50 ohm resistor **6028**. Circuit components **6022** and **6024** form a second output impedance match into a 50 ohm resistor **6026**. Capacitors **6008** and **6012** act as storage capacitors for the embodiment. Voltage source **6046** and resistor **6002** generate a 950 MHz signal with a 50 ohm output impedance, which are used as the input to the circuit. Circuit element **6016** includes a 150 MHz oscillator and a pulse generator, which are used to generate the energy transfer signal **6042**.

FIG. **55** illustrates a shunt tank circuit **5510** in a single-ended to-single-ended system **5512**. Similarly, FIG. **63** illustrates a shunt tank circuit **6310** in a system **6312**. The tank circuits **5510** and **6310** lower driving source impedance, which improves transient response. The tank circuits **5510** and **6310** are able store the energy from the input signal and provide a low driving source impedance to transfer that energy throughout the aperture of the closed switch. The transient nature of the switch aperture can be viewed as having a response that, in addition to including the input frequency, has large component frequencies above the input frequency, (i.e. higher frequencies than the input frequency are also able to effectively pass through the aperture). Resonant circuits or structures, for example resonant tanks **5510** or **6310**, can take advantage of this by being able to transfer energy throughout the switch's transient frequency response (i.e. the capacitor in the resonant tank appears as a low driving source impedance during the transient period of the aperture).

The example tank and resonant structures described above are for illustrative purposes and are not limiting. Alternate configurations can be utilized. The various resonant tanks and structures discussed can be combined or utilized independently as is now apparent.

3.5 Charge and Power Transfer Concepts

Concepts of charge transfer are now described with reference to FIGS. **71**A–F. FIG. **71**A illustrates a circuit **7102**, including a switch S and a capacitor **7106** having a capacitance C. The switch S is controlled by a control signal **7108**, which includes pulses **19010** having apertures T.

In FIG. **71**B, Equation 10 illustrates that the charge q on a capacitor having a capacitance C, such as the capacitor **7106**, is proportional to the voltage V across the capacitor, where:

q=Charge in Coulombs

C=Capacitance in Farads

V=Voltage in Volts

A=Input Signal Amplitude

Where the voltage V is represented by Equation 11, Equation 10 can be rewritten as Equation 12. The change in charge Δq over time t is illustrated as in Equation 13 as $\Delta q(t)$, which can be rewritten as Equation 14. Using the sum-to-product trigonometric identity of Equation 15, Equation 14 can be rewritten as Equation 16, which can be rewritten as equation 17.

Note that the sin term in Equation 11 is a function of the aperture T only. Thus, $\Delta q(t)$ is at a maximum when T is equal to an odd multiple of π(i.e., π, 3π, 5π, . . .). Therefore, the capacitor **7106** experiences the greatest change in charge when the aperture T has a value of πt or a time interval representative of 180 degrees of the input sinusoid. Conversely, when T is equal to 2π, 4π, 6π, . . . , minimal charge is transferred.

Equations 18, 19, and 20 solve for q(t) by integrating Equation 10, allowing the charge on the capacitor **7106** with respect to time to be graphed on the same axis as the input sinusoid sin(t), as illustrated in the graph of FIG. **71**C. As the aperture T decreases in value or tends toward an impulse, the phase between the charge on the capacitor C or q(t) and sin(t) tend toward zero. This is illustrated in the graph of FIG. **71**D, which indicates that the maximum impulse charge transfer occurs near the input voltage maxima. As this graph indicates, considerably less charge is transferred as the value of T decreases.

Power/charge relationships are illustrated in Equations 21–26 of FIG. **71**E, where it is shown that power is proportional to charge, and transferred charge is inversely proportional to insertion loss.

Concepts of insertion loss are illustrated in FIG. **71**F. Generally, the noise figure of a lossy passive device is numerically equal to the device insertion loss. Alternatively, the noise figure for any device cannot be less that its insertion loss. Insertion loss can be expressed by Equation 27 or 28. From the above discussion, it is observed that as the aperture T increases, more charge is transferred from the input to the capacitor **7106**, which increases power transfer from the input to the output. It has been observed that it is not necessary to accurately reproduce the input voltage at the output because relative modulated amplitude and phase information is retained in the transferred power.

3.6 Optimizing and Adjusting the Non-Negligible Aperture Width/Duration

3.6.1 Varying Input and Output Impedances

In an embodiment of the invention, the energy transfer signal (i.e., control signal **2006** in FIG. **20**A), is used to vary the input impedance seen by the EM Signal **2004** and to vary the output impedance driving a load. An example of this embodiment is described below using a gated transfer module **5101** shown in FIG. **51**A. The method described below is not limited to the gated transfer module **5101**.

In FIG. **51**A, when switch **5106** is closed, the impedance looking into circuit **5102** is substantially the impedance of a storage module, illustrated here as a storage capacitance **5108**, in parallel with the impedance of a load **5112**. When the switch **5106** is open, the impedance at point **5114** approaches infinity. It follows that the average impedance at point **5114** can be varied from the impedance of the storage module illustrated in parallel with the load **5112**, to the highest obtainable impedance when switch **5106** is open, by varying the ratio of the time that switch **5106** is open to the time switch **5106** is closed. The switch **5106** is controlled by an energy transfer signal **5110**. Thus the impedance at point **5114** can be varied by controlling the aperture width of the energy transfer signal in conjunction with the aliasing rate.

An example method of altering the energy transfer signal **5106** of FIG. **51**A is now described with reference to FIG. **49**A, where a circuit **4902** receives an input oscillating signal **4906** and outputs a pulse train shown as doubler output signal **4904**. The circuit **4902** can be used to generate the energy transfer signal **5106**. Example waveforms of **4904** are shown on FIG. **49**C.

It can be shown that by varying the delay of the signal propagated by the inverter **4908**, the width of the pulses in the doubler output signal **4904** can be varied. Increasing the delay of the signal propagated by inverter **4908**, increases the width of the pulses. The signal propagated by inverter

4908 can be delayed by introducing a R/C low pass network in the output of inverter 4908. Other means of altering the delay of the signal propagated by inverter 4908 will be well known to those skilled in the art.

3.6.2 Real Time Aperture Control

In an embodiment, the aperture width/duration is adjusted in real time. For example, referring to the timing diagrams in FIGS. 64B–F, a clock signal 6414 (FIG. 64B) is utilized to generate an energy transfer signal 6416 (FIG. 64F), which includes energy transfer pluses 6418, having variable apertures 6420. In an embodiment, the clock signal 6414 is inverted as illustrated by inverted clock signal 6422 (FIG. 64D). The clock signal 6414 is also delayed, as illustrated by delayed clock signal 6424 (FIG. 64E). The inverted clock signal 6414 and the delayed clock signal 6424 are then ANDed together, generating an energy transfer signal 6416, which is active—energy transfer pulses 6418—when the delayed clock signal 6424 and the inverted clock signal 6422 are both active. The amount of delay imparted to the delayed clock signal 6424 substantially determines the width or duration of the apertures 6420. By varying the delay in real time, the apertures are adjusted in real time.

In an alternative implementation, the inverted clock signal 6422 is delayed relative to the original clock signal 6414, and then ANDed with the original clock signal 6414. Alternatively, the original clock signal 6414 is delayed then inverted, and the result ANDed with the original clock signal 6414.

FIG. 64A illustrates an exemplary real time aperture control system 6402 that can be utilized to adjust apertures in real time. The example real time aperture control system 6402 includes an RC circuit 6404, which includes a voltage variable capacitor 6412 and a resistor 6426. The real time aperture control system 6402 also includes an inverter 6406 and an AND gate 6408. The AND gate 6408 optionally includes an enable input 6410 for enabling/disabling the AND gate 6408. The RC circuit 6404. The real time aperture control system 6402 optionally includes an amplifier 6428.

Operation of the real time aperture control circuit is described with reference to the timing diagrams of FIGS. 64B–F. The real time control system 6402 receives the input clock signal 6414, which is provided to both the inverter 6406 and to the RC circuit 6404. The inverter 6406 outputs the inverted clock signal 6422 and presents it to the AND gate 6408. The RC circuit 6404 delays the clock signal 6414 and outputs the delayed clock signal 6424. The delay is determined primarily by the capacitance of the voltage variable capacitor 6412. Generally, as the capacitance decreases, the delay decreases.

The delayed clock signal 6424 is optionally amplified by the optional amplifier 6428, before being presented to the AND gate 6408. Amplification is desired, for example, where the RC constant of the RC circuit 6404 attenuates the signal below the threshold of the AND gate 6408.

The AND gate 6408 ANDs the delayed clock signal 6424, the inverted clock signal 6422, and the optional Enable signal 6410, to generate the energy transfer signal 6416. The apertures 6420 are adjusted in real time by varying the voltage to the voltage variable capacitor 6412.

In an embodiment, the apertures 6420 are controlled to optimize power transfer. For example, in an embodiment, the apertures 6420 are controlled to maximize power transfer. Alternatively, the apertures 6420 are controlled for variable gain control (e.g. automatic gain control—AGC). In this embodiment, power transfer is reduced by reducing the apertures 6420.

As can now be readily seen from this disclosure, many of the aperture circuits presented, and others, can be modified as in circuits illustrated in FIGS. 46H–K. Modification or selection of the aperture can be done at the design level to remain a fixed value in the circuit, or in an alternative embodiment, may be dynamically adjusted to compensate for, or address, various design goals such as receiving RF signals with enhanced efficiency that are in distinctively different bands of operation, e.g. RF signals at 900 MHZ and 1.8 GHz.

3.7 Adding a Bypass Network

In an embodiment of the invention, a bypass network is added to improve the efficiency of the energy transfer module. Such a bypass network can be viewed as a means of synthetic aperture widening. Components for a bypass network are selected so that the bypass network appears substantially lower impedance to transients of the switch module (i.e., frequencies greater than the received EM signal) and appears as a moderate to high impedance to the input EM signal (e.g., greater that 100 Ohms at the RF frequency).

The time that the input signal is now connected to the opposite side of the switch module is lengthened due to the shaping caused by this network, which in simple realizations may be a capacitor or series resonant inductor-capacitor. A network that is series resonant above the input frequency would be a typical implementation. This shaping improves the conversion efficiency of an input signal that would otherwise, if one considered the aperture of the energy transfer signal only, be relatively low in frequency to be optimal.

For example, referring to FIG. 61 a bypass network 6102 (shown in this instance as capacitor 6112), is shown bypassing switch module 6104. In this embodiment the bypass network increases the efficiency of the energy transfer module when, for example, less than optimal aperture widths were chosen for a given input frequency on the energy transfer signal 6106. The bypass network 6102 could be of different configurations than shown in FIG. 61. Such an alternate is illustrated in FIG. 57. Similarly, FIG. 62 illustrates another example bypass network 6202, including a capacitor 6204.

The following discussion will demonstrate the effects of a minimized aperture and the benefit provided by a bypassing network. Beginning with an initial circuit having a 550 ps aperture in FIG. 65, its output is seen to be 2.8 mVpp applied to a 50 ohm load in FIG. 69A. Changing the aperture to 270 ps as shown in FIG. 66 results in a diminished output of 2.5 Vpp applied to a 50 ohm load as shown in FIG. 69B. To compensate for this loss, a bypass network may be added, a specific implementation is provided in FIG. 67. The result of this addition is that 3.2 Vpp can now be applied to the 50 ohm load as shown in FIG. 70A. The circuit with the bypass network in FIG. 67 also had three values adjusted in the surrounding circuit to compensate for the impedance changes introduced by the bypass network and narrowed aperture. FIG. 68 verifies that those changes added to the circuit, but without the bypass network, did not themselves bring about the increased efficiency demonstrated by the embodiment in FIG. 67 with the bypass network. FIG. 70B shows the result of using the circuit in FIG. 68 in which only 1.88 Vpp was able to be applied to a 50 ohm load.

3.8 Modifying the Energy Transfer Signal Utilizing Feedback

FIG. 47 shows an embodiment of a system 4701 which uses down-converted Signal 4708B as feedback 4706 to

control various characteristics of the energy transfer module **4704** to modify the down-converted signal **4708**B.

Generally, the amplitude of the down-converted signal **4708**B varies as a function of the frequency and phase differences between the EM signal **4504** and the energy transfer signal **4506**. In an embodiment, the down-converted signal **4708**B is used as the feedback **4706** to control the frequency and phase relationship between the EM signal **4504** and the energy transfer signal **4506**. This can be accomplished using the example logic in FIG. **52**A. The example circuit in FIG. **52**A can be included in the energy transfer signal module **4702**. Alternate implementations will be apparent to persons skilled in the relevant art(s) based on the teachings contained herein. Alternate implementations fall within the scope and spirit of the present invention. In this embodiment a state-machine is used as an example.

In the example of FIG. **52**A, a state machine **5204** reads an analog to digital converter, A/D **5202**, and controls a digital to analog converter, DAC **5206**. In an embodiment, the state machine **5204** includes 2 memory locations, Previous and Current, to store and recall the results of reading A/D **5202**. In an embodiment, the state machine **5204** utilizes at least one memory flag.

The DAC **5206** controls an input to a voltage controlled oscillator, VCO **5208**. VCO **5208** controls a frequency input of a pulse generator **5210**, which, in an embodiment, is substantially similar to the pulse generator shown in FIG. **46**C. The pulse generator **5210** generates energy transfer signal **4506**.

In an embodiment, the state machine **5204** operates in accordance with a state machine flowchart **5219** in FIG. **52**B. The result of this operation is to modify the frequency and phase relationship between the energy transfer signal **4506** and the EM signal **4504**, to substantially maintain the amplitude of the down-converted signal **4708**B at an optimum level.

The amplitude of the down-converted signal **4708**B can be made to vary with the amplitude of the energy transfer signal **4506**. In an embodiment where the switch module **6502** is a FET as shown in FIG. **45**A, wherein the gate **4518** receives the energy transfer signal **4506**, the amplitude of the energy transfer signal **4506** can determine the "on" resistance of the FET, which affects the amplitude of the down-converted signal **4708**B. The energy transfer signal module **4702**, as shown in FIG. **52**C, can be an analog circuit that enables an automatic gain control function. Alternate implementations will be apparent to persons skilled in the relevant art(s) based on the teachings contained herein. Alternate implementations fall within the scope and spirit of the present invention.

3.9 Other Implementations

The implementations described above are provided for purposes of illustration. These implementations are not intended to limit the invention. Alternate implementations, differing slightly or substantially from those described herein, will be apparent to persons skilled in the relevant art(s) based on the teachings contained herein. Such alternate implementations fall within the scope and spirit of the present invention.

3.10 Example Energy Transfer Down-Converters

Example implementations are described below for illustrative purposes. The invention is not limited to these examples.

FIG. **53** is a schematic diagram of an exemplary circuit to down convert a 915 MHZ signal to a 5 MHZ signal using a 101.1 MHZ clock.

FIG. **54** shows example simulation waveforms for the circuit of FIG. **53**. Waveform **5302** is the input to the circuit showing the distortions caused by the switch closure. Waveform **5304** is the unfiltered output at the storage unit. Waveform **5306** is the impedance matched output of the down-converter on a different time scale.

FIG. **55** is a schematic diagram of an exemplary circuit to down-convert a 915 MHZ signal to a 5 MHZ signal using a 101.1 MHZ clock. The circuit has additional tank circuitry to improve conversion efficiency.

FIG. **56** shows example simulation waveforms for the circuit of FIG. **55**. Waveform **5502** is the input to the circuit showing the distortions caused by the switch closure. Waveform **5504** is the unfiltered output at the storage unit. Waveform **5506** is the output of the down-converter after the impedance match circuit.

FIG. **57** is a schematic diagram of an exemplary circuit to down-convert a 915 MHZ signal to a 5 MHZ signal using a 101.1 MHZ clock. The circuit has switch bypass circuitry to improve conversion efficiency.

FIG. **58** shows example simulation waveforms for the circuit of FIG. **57**. Waveform **5702** is the input to the circuit showing the distortions caused by the switch closure. Waveform **5704** is the unfiltered output at the storage unit. Waveform **5706** is the output of the down-converter after the impedance match circuit.

FIG. **59** shows a schematic of the example circuit in FIG. **53** connected to an FSK source that alternates between 913 and 917 MHZ, at a baud rate of 500 Kbaud. FIG. **72** shows the original FSK waveform **5902** and the down-converted waveform **5904** at the output of the load impedance match circuit.

4. FREQUENCY UP-CONVERSION

The present invention is directed to systems and methods of frequency up-conversion, and applications of same.

An example frequency up-conversion system **300** is illustrated in FIG. **3**. The frequency up-conversion system **300** is now described.

An input signal **302** (designated as "Control Signal" in FIG. **3**) is accepted by a switch module **304**. For purposes of example only, assume that the input signal **302** is a FM input signal **606**, an example of which is shown in FIG. **6**C. FM input signal **606** may have been generated by modulating information signal **602** onto oscillating signal **604** (FIGS. **6**A and **6**B). It should be understood that the invention is not limited to this embodiment. The information signal **602** can be analog, digital, or any combination thereof, and any modulation scheme can be used.

The output of switch module **304** is a harmonically rich signal **306**, shown for example in FIG. **6**D as a harmonically rich signal **608**. The harmonically rich signal **608** has a continuous and periodic waveform.

FIG. **6**E is an expanded view of two sections of harmonically rich signal **608**, section **610** and section **612**. The harmonically rich signal **608** may be a rectangular wave, such as a square wave or a pulse (although, the invention is not limited to this embodiment). For ease of discussion, the term "rectangular waveform" is used to refer to waveforms that are substantially rectangular. In a similar manner, the term "square wave" refers to those waveforms that are substantially square and it is not the intent of the present invention that a perfect square wave be generated or needed.

Harmonically rich signal **608** is comprised of a plurality of sinusoidal waves whose frequencies are integer multiples of the fundamental frequency of the waveform of the harmonically rich signal **608**. These sinusoidal waves are referred to as the harmonics of the underlying waveform, and the fundamental frequency is referred to as the first harmonic. FIG. **6**F and FIG. **6**G show separately the sinusoidal components making up the first, third, and fifth harmonics of section **610** and section **612**. (Note that in theory there may be an infinite number of harmonics; in this example, because harmonically rich signal **608** is shown as a square wave, there are only odd harmonics). Three harmonics are shown simultaneously (but not summed) in FIG. **6**H.

The relative amplitudes of the harmonics are generally a function of the relative widths of the pulses of harmonically rich signal **306** and the period of the fundamental frequency, and can be determined by doing a Fourier analysis of harmonically rich signal **306**. According to an embodiment of the invention, the input signal **606** may be shaped to ensure that the amplitude of the desired harmonic is sufficient for its intended use (e.g., transmission).

A filter **308** filters out any undesired frequencies (harmonics), and outputs an electromagnetic (EM) signal at the desired harmonic frequency or frequencies as an output signal 310, shown for example as a filtered output signal **614** in FIG. **6**I.

FIG. **4** illustrates an example universal frequency up-conversion (UFU) module **401**. The UFU module **401** includes an example switch module **304**, which comprises a bias signal **402**, a resistor or impedance **404**, a universal frequency translator (UFT) **450**, and a ground **408**. The UFT **450** includes a switch **406**. The input signal **302** (designated as "Control Signal" in FIG. **4**) controls the switch **406** in the UFT **450**, and causes it to close and open. Harmonically rich signal **306** is generated at a node **405** located between the resistor or impedance **404** and the switch **406**.

Also in FIG. **4**, it can be seen that an example filter **308** is comprised of a capacitor **410** and an inductor **412** shunted to a ground **414**. The filter is designed to filter out the undesired harmonics of harmonically rich signal **306**.

The invention is not limited to the UFU embodiment shown in FIG. **4**.

For example, in an alternate embodiment shown in FIG. **5**, an unshaped input signal **501** is routed to a pulse shaping module **502**. The pulse shaping module **502** modifies the unshaped input signal **501** to generate a (modified) input signal **302** (designated as the "Control Signal" in FIG. **5**). The input signal **302** is routed to the switch module **304**, which operates in the manner described above. Also, the filter **308** of FIG. **5** operates in the manner described above.

The purpose of the pulse shaping module **502** is to define the pulse width of the input signal **302**. Recall that the input signal **302** controls the opening and closing of the switch **406** in switch module **304**. During such operation, the pulse width of the input signal **302** establishes the pulse width of the harmonically rich signal **306**. As stated above, the relative amplitudes of the harmonics of the harmonically rich signal **306** are a function of at least the pulse width of the harmonically rich signal **306**. As such, the pulse width of the input signal **302** contributes to setting the relative amplitudes of the harmonics of harmonically rich signal **306**.

Further details of up-conversion as described in this section are presented in pending U.S. application "Method and System for Frequency Up-Conversion," Ser. No. 09/176,154, filed Oct. 21, 1998, incorporated herein by reference in its entirety.

5ENHANCED SIGNAL RECEPTION

The present invention is directed to systems and methods of enhanced signal reception (ESR), and applications of same.

Referring to FIG. **21**, transmitter **2104** accepts a modulating baseband signal **2102** and generates (transmitted) redundant spectrums **2106***a–n*, which are sent over communications medium **2108**. Receiver **2112** recovers a demodulated baseband signal **2114** from (received) redundant spectrums **2106***a–n*. Demodulated baseband signal **2114** is representative of the modulating baseband signal **2102**, where the level of similarity between the modulating baseband signal **2114** and the modulating baseband signal **2102** is application dependent.

Modulating baseband signal **2102** is preferably any information signal desired for transmission and/or reception. An example modulating baseband signal **2102** is illustrated in FIG. **22**A, and has an associated modulating baseband spectrum **2104** and image spectrum **2203** that are illustrated in FIG. **22**B. Modulating baseband signal **2102** is illustrated as an analog signal in FIG. **22***a*, but could also be a digital signal, or combination thereof. Modulating baseband signal **2102** could be a voltage (or current) characterization of any number of real world occurrences, including for example and without limitation, the voltage (or current) representation for a voice signal.

Each transmitted redundant spectrum **2106***a–n* contains the necessary information to substantially reconstruct the modulating baseband signal **2102**. In other words, each redundant spectrum **2106***a–n* contains the necessary amplitude, phase, and frequency information to reconstruct the modulating baseband signal **2102**.

FIG. **22**C illustrates example transmitted redundant spectrums **2206***b–d*. Transmitted redundant spectrums **2206***b–d* are illustrated to contain three redundant spectrums for illustration purposes only. Any number of redundant spectrums could be generated and transmitted as will be explained in following discussions.

Transmitted redundant spectrums **2206***b–d* are centered at f_1, with a frequency spacing f_2 between adjacent spectrums. Frequencies f_1 and f_2 are dynamically adjustable in real-time as will be shown below. FIG. **22**D illustrates an alternate embodiment, where redundant spectrums **2208***c,d* are centered on unmodulated oscillating signal **2209** at f_1 (Hz). Oscillating signal **2209** may be suppressed if desired using, for example, phasing techniques or filtering techniques. Transmitted redundant spectrums are preferably above baseband frequencies as is represented by break **2205** in the frequency axis of FIGS. **22**C and **22**D.

Received redundant spectrums **2110***a–n* are substantially similar to transmitted redundant spectrums **2106***a–n*, except for the changes introduced by the communications medium **2108**. Such changes can include but are not limited to signal attenuation, and signal interference. FIG. **22**E illustrates example received redundant spectrums **2210***b–d*. Received redundant spectrums **2210***b–d* are substantially similar to transmitted redundant spectrums **2206***b–d*, except that redundant spectrum **2210***c* includes an undesired jamming signal spectrum **2211** in order to illustrate some advantages of the present invention. Jamming signal spectrum **2211** is a frequency spectrum associated with a jamming signal. For purposes of this invention, a "jamming signal" refers to any unwanted signal, regardless of origin, that may interfere

with the proper reception and reconstruction of an intended signal. Furthermore, the jamming signal is not limited to tones as depicted by spectrum **2211**, and can have any spectral shape, as will be understood by those skilled in the art(s).

As stated above, demodulated baseband signal **2114** is extracted from one or more of received redundant spectrums **2210***b–d*. FIG. **22**F illustrates example demodulated baseband signal **2212** that is, in this example, substantially similar to modulating baseband signal **2102** (FIG. **22**A); where in practice, the degree of similarity is application dependent.

An advantage of the present invention should now be apparent. The recovery of modulating baseband signal **2102** can be accomplished by receiver **2112** in spite of the fact that high strength jamming signal(s) (e.g. jamming signal spectrum **2211**) exist on the communications medium. The intended baseband signal can be recovered because multiple redundant spectrums are transmitted, where each redundant spectrum carries the necessary information to reconstruct the baseband signal. At the destination, the redundant spectrums are isolated from each other so that the baseband signal can be recovered even if one or more of the redundant spectrums are corrupted by a jamming signal.

Transmitter **2104** will now be explored in greater detail. FIG. **23**A illustrates transmitter **2301**, which is one embodiment of transmitter **2104** that generates redundant spectrums configured similar to redundant spectrums **2206***b–d*. Transmitter **2301** includes generator **2303**, optional spectrum processing module **2304**, and optional medium interface module **2320**. Generator **2303** includes: first oscillator **2302**, second oscillator **2309**, first stage modulator **2306**, and second stage modulator **2310**.

Transmitter **2301** operates as follows. First oscillator **2302** and second oscillator **2309** generate a first oscillating signal **2305** and second oscillating signal **2312**, respectively. First stage modulator **2306** modulates first oscillating signal **2305** with modulating baseband signal **2202**, resulting in modulated signal **2208**. First stage modulator **2306** may implement any type of modulation including but not limited to: amplitude modulation, frequency modulation, phase modulation, combinations thereof or any other type of modulation. Second stage modulator **2310** modulates modulated signal **2308** with second oscillating signal **2312**, resulting in multiple redundant spectrums **2206***a–n* shown in FIG. **23**B. Second stage modulator **2310** is preferably a phase modulator, or a frequency modulator, although other types of modulation may be implemented including but not limited to amplitude modulation. Each redundant spectrum **2206***a–n* contains the necessary amplitude, phase, and frequency information to substantially reconstruct the modulating baseband signal **2202**.

Redundant spectrums **2206***a–n* are substantially centered around f_1, which is the characteristic frequency of first oscillating signal **2305**. Also, each redundant spectrum **2206***a–n* (except for **2206***c*) is offset from f_1 by approximately a multiple of f_2 (Hz), where f_2 is the frequency of the second oscillating signal **2312**. Thus, each redundant spectrum **2206***a–n* is offset from an adjacent redundant spectrum by f_2 (Hz). This allows the spacing between adjacent redundant spectrums to be adjusted (or tuned) by changing f_2 that is associated with second oscillator **2309**. Adjusting the spacing between adjacent redundant spectrums allows for dynamic real-time tuning of the bandwidth occupied by redundant spectrums **2206***a–n*.

In one embodiment, the number of redundant spectrums **2206***a–n* generated by transmitter **2301** is arbitrary and may be unlimited as indicated by the "a–n" designation for redundant spectrums **2206***a–n*. However, a typical communications medium will have a physical and/or administrative limitations (i.e. FCC regulations) that restrict the number of redundant spectrums that can be practically transmitted over the communications medium. Also, there may be other reasons to limit the number of redundant spectrums transmitted. Therefore, preferably, the transmitter **2301** will include an optional spectrum processing module **2304** to process the redundant spectrums **2206***a–n* prior to transmission over communications medium **2108**.

In one embodiment, spectrum processing module **2304** includes a filter with a passband **2207** (FIG. **23**C) to select redundant spectrums **2206***b–d* for transmission. This will substantially limit the frequency bandwidth occupied by the redundant spectrums to the passband **2207**. In one embodiment, spectrum processing module **2304** also up converts redundant spectrums and/or amplifies redundant spectrums prior to transmission over the communications medium **2108**. Finally, medium interface module **2320** transmits redundant spectrums over the communications medium **2108**. In one embodiment, communications medium **2108** is an over-the-air link and medium interface module **2320** is an antenna. Other embodiments for communications medium **2108** and medium interface module **2320** will be understood based on the teachings contained herein.

FIG. **23**D illustrates transmitter **2321**, which is one embodiment of transmitter **2104** that generates redundant spectrums configured similar to redundant spectrums **2208***c–d* and unmodulated spectrum **2209**. Transmitter **2321** includes generator **2311**, spectrum processing module **2304**, and (optional) medium interface module **2320**. Generator **2311** includes: first oscillator **2302**, second oscillator **2309**, first stage modulator **2306**, and second stage modulator **2310**.

As shown in FIG. **23**D, many of the components in transmitter **2321** are similar to those in transmitter **2301**. However, in this embodiment, modulating baseband signal **2102** modulates second oscillating signal **2312**. Transmitter **2321** operates as follows. First stage modulator **2306** modulates second oscillating signal **2312**with modulating baseband signal **2202**, resulting in modulated signal **2322**. As described earlier, first stage modulator **2306** can effect any type of modulation including but not limited to: amplitude modulation frequency modulation, combinations thereof or any other type of modulation. Second stage modulator **2310** modulates first oscillating signal **2304** with modulated signal **2322**, resulting in redundant spectrums **2208***a–n*, as shown in FIG. **23**E. Second stage modulator **2310** is preferably a phase or frequency modulator, although other modulators could used including but not limited to an amplitude modulator.

Redundant spectrums **2208***a–n* are centered on unmodulated spectrum **2109** (at f_1 Hz), and adjacent spectrums are separated by f_2 Hz. The number of redundant spectrums **2208***a–n* generated by generator **2311** is arbitrary and unlimited, similar to spectrums **2206***a–n* discussed above. Therefore, optional spectrum processing module **2304** may also include a filter with passband **2325** to select, for example, spectrums **2208***c,d* for transmission over communications medium **2108**. In addition, optional spectrum processing module **2304** may also include a filter (such as a bands top filter) to attenuate unmodulated spectrum **2209**. Alternatively, unmodulated spectrum **2109** may be attenuated by using phasing techniques during redundant spectrum generation. Finally, (optional) medium interface module **2320** transmits redundant spectrums **2208***c,d* over communications medium **2108**.

Receiver **2112** will now be explored in greater detail to illustrate recovery of a demodulated baseband signal from received redundant spectrums. FIG. **24**A illustrates receiver **2430**, which is one embodiment of receiver **2112**. Receiver **2430** includes optional medium interface module **2402**, down-converter **2404**, spectrum isolation module **2408**, and data extraction module **2414**. Spectrum isolation module **2408** includes filters **2410***a–c*. Data extraction module **2414** includes demodulators **2416***a–c*, error check modules **2420***a–c*, and arbitration module **2424**. Receiver **2430** will be discussed in relation to the signal diagrams in FIGS. **24**B–**24**J.

In one embodiment, optional medium interface module **2402** receives redundant spectrums **2210***b–d* (FIG. **22**E, and FIG. **24**B). Each redundant spectrum **2210***b–d* includes the necessary amplitude, phase, and frequency information to substantially reconstruct the modulating baseband signal used to generated the redundant spectrums. However, in the present example, spectrum **2210***c* also contains jamming signal **2211**, which may interfere with the recovery of a baseband signal from spectrum **2210***c*. Down-converter **2404** down-converts received redundant spectrums **2210***b–d* to lower intermediate frequencies, resulting in redundant spectrums **2406***a–c* (FIG. **24**C). Jamming signal **2211** is also down-converted to jamming signal **2407**, as it is contained within redundant spectrum **2406***b*. Spectrum isolation module **2408** includes filters **2410***a–c* that isolate redundant spectrums **2406***a–c* from each other (FIGS. **24**D–**24**F, respectively). Demodulators **2416***a–c* independently demodulate spectrums **2406***a–c*, resulting in demodulated baseband signals **2418***a–c*, respectively (FIGS. **24**G–**24**I). Error check modules **2420***a–c* analyze demodulate baseband signal **2418***a–c* to detect any errors. In one embodiment, each error check module **2420***a–c* sets an error flag **2422***a–c* whenever an error is detected in a demodulated baseband signal. Arbitration module **2424** accepts the demodulated baseband signals and associated error flags, and selects a substantially error-free demodulated baseband signal (FIG. **24**J). In one embodiment, the substantially error-free demodulated baseband signal will be substantially similar to the modulating baseband signal used to generate the received redundant spectrums, where the degree of similarity is application dependent.

Referring to FIGS. **24**G–I, arbitration module **2424** will select either demodulated baseband signal **2418***a* or **2418***c*, because error check module **2420***b* will set the error flag **2422***b* that is associated with demodulated baseband signal **2418***b*.

The error detection schemes implemented by the error detection modules include but are not limited to: cyclic redundancy check (CAC) and parity check for digital signals, and various error detections schemes for analog signal.

Further details of enhanced signal reception as described in this section are presented in pending U.S. application "Method and System for Ensuring Reception of a Communications Signal," Ser. No. 09/176,415, filed Oct. 21, 1998, incorporated herein by reference in its entirety.

6. UNIFIED DOWN-CONVERSION AND FILTERING

The present invention is directed to systems and methods of unified down-conversion and filtering (UDF), and applications of same.

In particular, the present invention includes a unified down-converting and filtering (UDF) module that performs frequency selectivity and frequency translation in a unified (i.e., integrated) manner. By operating in this manner, the invention achieves high frequency selectivity prior to frequency translation (the invention is not limited to this embodiment). The invention achieves high frequency selectivity at substantially any frequency, including but not limited to RF (radio frequency) and greater frequencies. It should be understood that the invention is not limited to this example of RF and greater frequencies. The invention is intended, adapted, and capable of working with lower than radio frequencies.

FIG. **17** is a conceptual block diagram of a UDF module **1702** according to an embodiment of the present invention. The UDF module **1702** performs at least frequency translation and frequency selectivity.

The effect achieved by the UDF module **1702** is to perform the frequency selectivity operation prior to the performance of the frequency translation operation. Thus, the UDF module **1702** effectively performs input filtering.

According to embodiments of the present invention, such input filtering involves a relatively narrow bandwidth. For example, such input filtering may represent channel select filtering, where the filter bandwidth may be, for example, 50 KHz to 150 KHz. It should be understood, however, that the invention is not limited to these frequencies. The invention is intended, adapted, and capable of achieving filter bandwidths of less than and greater than these values.

In embodiments of the invention, input signals **1704** received by the UDF module **1702** are at radio frequencies. The UDF module **1702** effectively operates to input filter these RF input signals **1704**. Specifically, in these embodiments, the UDF module **1702** effectively performs input, channel select filtering of the RF input signal **1704**. Accordingly, the invention achieves high selectivity at high frequencies.

The UDF module **1702** effectively performs various types of filtering, including but not limited to bandpass filtering, low pass filtering, high pass filtering, notch filtering, all pass filtering, band stop filtering, etc., and combinations thereof.

Conceptually, the UDF module **1702** includes a frequency translator **1708**. The frequency translator **1708** conceptually represents that portion of the UDF module **1702** that performs frequency translation (down conversion).

The UDF module **1702** also conceptually includes an apparent input filter **1706** (also sometimes called an input filtering emulator). Conceptually, the apparent input filter **1706** represents that portion of the UDF module **1702** that performs input filtering.

In practice, the input filtering operation performed by the UDF module **1702** is integrated with the frequency translation operation. The input filtering operation can be viewed as being performed concurrently with the frequency translation operation. This is a reason why the input filter **1706** is herein referred to as an "apparent" input filter **1706**.

The UDF module **1702** of the present invention includes a number of advantages. For example, high selectivity at high frequencies is realizable using the UDF module **1702**. This feature of the invention is evident by the high Q factors that are attainable. For example, and without limitation, the UDF module **1702** can be designed with a filter center frequency f_C on the order of 900 MHZ, and a filter bandwidth on the order of 50 KHz. This represents a Q of 18,000 (Q is equal to the center frequency divided by the bandwidth).

It should be understood that the invention is not limited to filters with high Q factors. The filters contemplated by the

present invention may have lesser or greater Qs, depending on the application, design, and/or implementation. Also, the scope of the invention includes filters where Q factor as discussed herein is not applicable.

The invention exhibits additional advantages. For example, the filtering center frequency f_c of the UDF module **1702** can be electrically adjusted, either statically or dynamically.

Also, the UDF module **1702** can be designed to amplify input signals.

Further, the UDF module **1702** can be implemented without large resistors, capacitors, or inductors. Also, the UDF module **1702** does not require that tight tolerances be maintained on the values of its individual components, i.e., its resistors, capacitors, inductors, etc. As a result, the architecture of the UDF module **1702** is friendly to integrated circuit design techniques and processes.

The features and advantages exhibited by the UDF module **1702** are achieved at least in part by adopting a new technological paradigm with respect to frequency selectivity and translation. Specifically, according to the present invention, the UDF module **1702** performs the frequency selectivity operation and the frequency translation operation as a single, unified (integrated) operation. According to the invention, operations relating to frequency translation also contribute to the performance of frequency selectivity, and vice versa.

According to embodiments of the present invention, the UDF module generates an output signal from an input signal using samples/instances of the input signal and samples/instances of the output signal.

More particularly, first, the input signal is under-sampled. This input sample includes information (such as amplitude, phase, etc.) representative of the input signal existing at the time the sample was taken.

As described further below, the effect of repetitively performing this step is to translate the frequency (that is, down-convert) of the input signal to a desired lower frequency, such as an intermediate frequency (IF) or baseband.

Next, the input sample is held (that is, delayed).

Then, one or more delayed input samples (some of which may have been scaled) are combined with one or more delayed instances of the output signal (some of which may have been scaled) to generate a current instance of the output signal.

Thus, according to a preferred embodiment of the invention, the output signal is generated from prior samples/instances of the input signal and/or the output signal. (It is noted that, in some embodiments of the invention, current samples/instances of the input signal and/or the output signal may be used to generate current instances of the output signal.). By operating in this manner, the UDF module preferably performs input filtering and frequency down-conversion in a unified manner.

FIG. **19** illustrates an example implementation of the unified down-converting and filtering (UDF) module **1922**. The UDF module **1922** performs the frequency translation operation and the frequency selectivity operation in an integrated, unified manner as described above, and as further described below.

In the example of FIG. **19**, the frequency selectivity operation performed by the UDF module **1922** comprises a band-pass filtering operation according to EQ. 1, below, which is an example representation of a band-pass filtering transfer function.

$$VO=\alpha_1 z^{-1} VI-\beta_1 z^{-1} VO-\beta_0 z^{-2} VO \qquad \text{EQ. 1}$$

It should be noted, however, that the invention is not limited to band-pass filtering. Instead, the invention effectively performs various types of filtering, including but not limited to bandpass filtering, low pass filtering, high pass filtering, notch filtering, all pass filtering, band stop filtering, etc., and combinations thereof. As will be appreciated, there are many representations of any given filter type. The invention is applicable to these filter representations. Thus, EQ. 1 is referred to herein for illustrative purposes only, and is not limiting.

The UDF module **1922** includes a down-convert and delay module **1924**, first and second delay modules **1928** and **1930**, first and second scaling modules **1932** and **1934**, an output sample and hold module **1936**, and an (optional) output smoothing module **1938**. Other embodiments of the UDF module will have these components in different configurations, and/or a subset of these components, and/or additional components. For example, and without limitation, in the configuration shown in FIG. **19**, the output smoothing module **1938** is optional.

As further described below, in the example of FIG. **19**, the down-convert and delay module **1924** and the first and second delay modules **1928** and **1930** include switches that are controlled by a clock having two phases, ϕ_1 and ϕ_2. ϕ_1 and ϕ_2 preferably have the same frequency, and are non-overlapping (alternatively, a plurality such as two clock signals having these characteristics could be used). As used herein, the term "non-overlapping" is defined as two or more signals where only one of the signals is active at any given time. In some embodiments, signals are "active" when they are high. In other embodiments, signals are active when they are low.

Preferably, each of these switches closes on a rising edge of ϕ_1 or ϕ_2, and opens on the next corresponding falling edge of ϕ_1 or ϕ_2. However, the invention is not limited to this example. As will be apparent to persons skilled in the relevant art(s), other clock conventions can be used to control the switches.

In the example of FIG. **19**, it is assumed that α_1 is equal to one. Thus, the output of the down-convert and delay module **1924** is not scaled. As evident from the embodiments described above, however, the invention is not limited to this example.

The example UDF module **1922** has a filter center frequency of 900.2 MHZ and a filter bandwidth of 570 KHz. The pass band of the UDF module **1922** is on the order of 899.915 MHZ to 900.485 MHZ. The Q factor of the UDF module **1922** is approximately 1879 (i.e., 900.2 MHZ divided by 570 KHz).

The operation of the UDF module **1922** shall now be described with reference to a Table 1802 (FIG. **18**) that indicates example values at nodes in the UDF module **1922** at a number of consecutive time increments. It is assumed in Table 1802 that the UDF module **1922** begins operating at time t−1. As indicated below, the UDF module **1922** reaches steady state a few time units after operation begins. The number of time units necessary for a given UDF module to reach steady state depends on the configuration of the UDF module, and will be apparent to persons skilled in the relevant art(s) based on the teachings contained herein.

At the rising edge of ϕ_1 at time t−1, a switch **1950** in the down-convert and delay module **1924** closes. This allows a capacitor **1952** to charge to the current value of an input signal, VI_{t-1}, such that node **1902** is at VI_{t-1}. This is indicated by cell **1804** in FIG. **18**. In effect, the combination of the switch **1950** and the capacitor **1952** in the down-

convert and delay module **1924** operates to translate the frequency of the input signal VI to a desired lower frequency, such as IF or baseband. Thus, the value stored in the capacitor **1952** represents an instance of a down-converted image of the input signal VI.

The manner in which the down-convert and delay module **1924** performs frequency down-conversion is further described elsewhere in this application, and is additionally described in pending U.S. application "Method and System for Down-Converting Electromagnetic Signals," Ser. No. 09/176,022, filed Oct. 21, 1998, which is herein incorporated by reference in its entirety.

Also at the rising edge of ϕ_1 at time t−1, a switch **1958** in the first delay module **1928** closes, allowing a capacitor **1960** to charge to VO_{t-1}, such that node **1906** is at VO_{t-1}. This is indicated by cell **1806** in Table 1802. (In practice, VO_{t-1} is undefined at this point. However, for ease of understanding, VO_{t-1} shall continue to be used for purposes of explanation.)

Also at the rising edge of ϕ_1 time t−1, a switch **1966** in the second delay module **1930** closes, allowing a capacitor **1968** to charge to a value stored in a capacitor **1964**. At this time, however, the value in capacitor **1964** is undefined, so the value in capacitor **1968** is undefined. This is indicated by cell **1807** in table 1802.

At the rising edge of ϕ_2 at time t−1, a switch **1954** in the down-convert and delay module **1924** closes, allowing a capacitor **1956** to charge to the level of the capacitor **1952**. Accordingly, the capacitor **1956** charges to VI_{t-1}, such that node **1904** is at VI_{t-1}. This is indicated by cell **1810** in Table 1802.

The UDF module **1922** may optionally include a unity gain module **1990**A between capacitors **1952** and **1956**. The unity gain module **1990**A operates as a current source to enable capacitor **1956** to charge without draining the charge from capacitor **1952**. For a similar reason, the UDF module **1922** may include other unity gain modules **1990**B–**1990**G. It should be understood that, for many embodiments and applications of the invention, these unity gain modules **1990**A–**1990**G are optional. The structure and operation of the unity gain modules **1990** will be apparent to persons skilled in the relevant art(s).

Also at the rising edge of ϕ_2 at time t−1, a switch **1962** in the first delay module **1928** closes, allowing a capacitor **1964** to charge to the level of the capacitor **1960**. Accordingly, the capacitor **1964** charges to VO_{t-1}, such that node **1908** is at VO_{t-1}. This is indicated by cell **1814** in Table 1802.

Also at the rising edge of ϕ_2 at time t−1, a switch **1970** in the second delay module **1930** closes, allowing a capacitor **1972** to charge to a value stored in a capacitor **1968**. At this time, however, the value in capacitor **1968** is undefined, so the value in capacitor **1972** is undefined. This is indicated by cell **1815** in table 1802.

At time t, at the rising edge of ϕ_1, the switch **1950** in the down-convert and delay module **1924** closes. This allows the capacitor **1952** to charge to VI_t, such that node **1902** is at VI_t. This is indicated in cell **1816** of Table 1802.

Also at the rising edge of ϕ_1 at time t, the switch **1958** in the first delay module **1928** closes, thereby allowing the capacitor **1960** to charge to VO_t. Accordingly, node **1906** is at VO_t. This is indicated in cell **1820** in Table 1802.

Further at the rising edge of ϕ_1 at time t, the switch **1966** in the second delay module **1930** closes, allowing a capacitor **1968** to charge to the level of the capacitor **1964**. Therefore, the capacitor **1968** charges to VO_{t-1}, such that node **1910** is at VO_{t-1}. This is indicated by cell **1824** in Table 1802.

At the rising edge of ϕ_2 at time t, the switch **1954** in the down-convert and delay module **1924** closes, allowing the capacitor **1956** to charge to the level of the capacitor **1952**. Accordingly, the capacitor **1956** charges to VI_t, such that node **1904** is at VI_t. This is indicated by cell **1828** in Table 1802.

Also at the rising edge of ϕ_2 at time t, the switch **1962** in the first delay module **1928** closes, allowing the capacitor **1964** to charge to the level in the capacitor **1960**. Therefore, the capacitor **1964** charges to VO_t, such that node **1908** is at VO_t. This is indicated by cell **1832** in Table 1802.

Further at the rising edge of ϕ_2 at time t, the switch **1970** in the second delay module **1930** closes, allowing the capacitor **1972** in the second delay module **1930** to charge to the level of the capacitor **1968** in the second delay module **1930**. Therefore, the capacitor **1972** charges to VO_{t-1}, such that node **1912** is at VO_{t-1}. This is indicated in cell **1836** of FIG. **18**.

At time t+1, at the rising edge of ϕ_1, the switch **1950** in the down-convert and delay module **1924** closes, allowing the capacitor **1952** to charge to VI_{t+1}. Therefore, node **1902** is at VI_{t+1}, as indicated by cell **1838** of Table 1802.

Also at the rising edge of ϕ_1 at time t+1, the switch **1958** in the first delay module **1928** closes, allowing the capacitor **1960** to charge to VO_{t+1}. Accordingly, node **1906** is at VO_{t+1}, as indicated by cell **1842** in Table 1802.

Further at the rising edge of ϕ_1 at time t+1, the switch **1966** in the second delay module **1930** closes, allowing the capacitor **1968** to charge to the level of the capacitor **1964**. Accordingly, the capacitor **1968** charges to VO_t, as indicated by cell **1846** of Table 1802.

In the example of FIG. **19**, the first scaling module **1932** scales the value at node **1908** (i.e., the output of the first delay module **1928**) by a scaling factor of −0.1. Accordingly, the value present at node **1914** at time t+1 is $-0.1*VO_t$. Similarly, the second scaling module **1934** scales the value present at node **1912** (i.e., the output of the second scaling module **1930**) by a scaling factor of −0.8. Accordingly, the value present at node **1916** is $-0.8*VO_{t-1}$ at time t+1.

At time t+1, the values at the inputs of the summer **1926** are: VI_t at node **1904**, $-0.1*VO_t$ at node **1914**, and $-0.8*VO_{t-1}$ at node **1916** (in the example of FIG. **19**, the values at nodes **1914** and **1916** are summed by a second summer **1925**, and this sum is presented to the summer **1926**). Accordingly, at time t+1, the summer generates a signal equal to $VI_t-0.1*VO_t-0.8*VO_{t-1}$.

At the rising edge of ϕ_1 at time t+1, a switch **1991** in the output sample and hold module **1936** closes, thereby allowing a capacitor **1992** to charge to VO_{t+1}. Accordingly, the capacitor **1992** charges to VO_{t+1}, which is equal to the sum generated by the adder **1926**. As just noted, this value is equal to: $VI_t-0.1*VO_t-0.8*VO_{t-1}$. This is indicated in cell **1850** of Table 1802. This value is presented to the optional output smoothing module **1938**, which smooths the signal to thereby generate the instance of the output signal VO_{t-1}. It is apparent from inspection that this value of VO_{t+1} is consistent with the band pass filter transfer function of EQ. 1.

Further details of unified down-conversion and filtering as described in this section are presented in pending U.S. application "Integrated Frequency Translation And Selectivity," Ser. No. 09/175,966, filed Oct. 21, 1998, incorporated herein by reference in its entirety.

7. EXAMPLE

Application Embodiments of the Invention

As noted above, the UFT module of the present invention is a very powerful and flexible device. Its flexibility is

illustrated, in part, by the wide range of applications in which it can be used. Its power is illustrated, in part, by the usefulness and performance of such applications.

Example applications of the UFT module were described above. In particular, frequency down-conversion, frequency up-conversion, enhanced signal reception, and unified down-conversion and filtering applications of the UFT module were summarized above, and are further described below. These applications of the UFT module are discussed herein for illustrative purposes. The invention is not limited to these example applications. Additional applications of the UFT module will be apparent to persons skilled in the relevant art(s), based on the teachings contained herein.

For example, the present invention can be used in applications that involve frequency down-conversion. This is shown in FIG. **1**C, for example, where an example UFT module **115** is used in a down-conversion module **114**. In this capacity, the UFT module **115** frequency down-converts an input signal to an output signal. This is also shown in FIG. **7**, for example, where an example UFT module **706** is part of a down-conversion module **704**, which is part of a receiver **702**.

The present invention can be used in applications that involve frequency up-conversion. This is shown in FIG. **1**D, for example, where an example UFT module **117** is used in a frequency up-conversion module **116**. In this capacity, the UFT module **117** frequency up-converts an input signal to an output signal. This is also shown in FIG. **8**, for example, where an example UFT module **806** is part of up-conversion module **804**, which is part of a transmitter **802**.

The present invention can be used in environments having one or more transmitters **902** and one or more receivers **906**, as illustrated in FIG. **9**. In such environments, one or more of the transmitters **902** may be implemented using a UFT module, as shown for example in FIG. **8**. Also, one or more of the receivers **906** may be implemented using a UFT module, as shown for example in FIG. **7**.

The invention can be used to implement a transceiver. An example transceiver **1002** is illustrated in FIG. **10**. The transceiver **1002** includes a transmitter **1004** and a receiver **1008**. Either the transmitter **1004** or the receiver **1008** can be implemented using a UFT module. Alternatively, the transmitter **1004** can be implemented using a UFT module **1006**, and the receiver **1008** can be implemented using a UFT module **1010**. This embodiment is shown in FIG. **10**.

Another transceiver embodiment according to the invention is shown in FIG. **11**. In this transceiver **1102**, the transmitter **1104** and the receiver **1108** are implemented using a single UFT module **1106**. In other words, the transmitter **1104** and the receiver **1108** share a UFT module **1106**.

As described elsewhere in this application, the invention is directed to methods and systems for enhanced signal reception (ESR). Various ESR embodiments include an ESR module (transmit) in a transmitter **1202**, and an ESR module (receive) in a receiver **1210**. An example ESR embodiment configured in this manner is illustrated in FIG. **12**.

The ESR module (transmit) **1204** includes a frequency up-conversion module **1206**. Some embodiments of this frequency up-conversion module **1206** may be implemented using a UFT module, such as that shown in FIG. **1**D.

The ESR module (receive) **1212** includes a frequency down-conversion module **1214**. Some embodiments of this frequency down-conversion module **1214** may be implemented using a UFT module, such as that shown in FIG. **1**C.

As described elsewhere in this application, the invention is directed to methods and systems for unified down-conversion and filtering (UDF). An example unified down-conversion and filtering module **1302** is illustrated in FIG. **13**. The unified down-conversion and filtering module **1302** includes a frequency down-conversion module **1304** and a filtering module **1306**. According to the invention, the frequency down-conversion module **1304** and the filtering module **1306** are implemented using a UFT module **1308**, as indicated in FIG. **13**.

Unified down-conversion and filtering according to the invention is useful in applications involving filtering and/or frequency down-conversion. This is depicted, for example, in FIGS. **15**A–**15**F. FIGS. **15**A–**15**C indicate that unified down-conversion and filtering according to the invention is useful in applications where filtering precedes, follows, or both precedes and follows frequency down-conversion. FIG. **15**D indicates that a unified down-conversion and filtering module **1524** according to the invention can be utilized as a filter **1522** (i.e., where the extent of frequency down-conversion by the down-converter in the unified down-conversion and filtering module **1524** is minimized). FIG. **15**E indicates that a unified down-conversion and filtering module **1528** according to the invention can be utilized as a down-converter **1526** (i.e., where the filter in the unified down-conversion and filtering module **1528** passes substantially all frequencies). FIG. **15**F illustrates that the unified down-conversion and filtering module **1532** can be used as an amplifier. It is noted that one or more UDF modules can be used in applications that involve at least one or more of filtering, frequency translation, and amplification.

For example, receivers, which typically perform filtering, down-conversion, and filtering operations, can be implemented using one or more unified down-conversion and filtering modules. This is illustrated, for example, in FIG. **14**.

The methods and systems of unified down-conversion and filtering of the invention have many other applications. For example, as discussed herein, the enhanced signal reception (ESR) module (receive) operates to down-convert a signal containing a plurality of spectrums. The ESR module (receive) also operates to isolate the spectrums in the down-converted signal, where such isolation is implemented via filtering in some embodiments. According to embodiments of the invention, the ESR module (receive) is implemented using one or more unified down-conversion and filtering (UDF) modules. This is illustrated, for example, in FIG. **16**. In the example of FIG. **16**, one or more of the UDF modules **1610**, **1612**, **1614** operates to down-convert a received signal. The UDF modules **1610**, **1612**, **1614** also operate to filter the down-converted signal so as to isolate the spectrum (s) contained therein. As noted above, the UDF modules **1610**, **1612**, **1614** are implemented using the universal frequency translation (UFT) modules of the invention.

The invention is not limited to the applications of the UFT module described above. For example, and without limitation, subsets of the applications (methods and/or structures) described herein (and others that would be apparent to persons skilled in the relevant art(s) based on the herein teachings) can be associated to form useful combinations.

For example, transmitters and receivers are two applications of the UFT module. FIG. **10** illustrates a transceiver **1002** that is formed by combining these two applications of the UFT module, i.e., by combining a transmitter **1004** with a receiver **1008**.

Also, ESR (enhanced signal reception) and unified down-conversion and filtering are two other applications of the UFT module. FIG. **16** illustrates an example where ESR and

unified down-conversion and filtering are combined to form a modified enhanced signal reception system.

The invention is not limited to the example applications of the UFT module discussed herein. Also, the invention is not limited to the example combinations of applications of the UFT module discussed herein. These examples were provided for illustrative purposes only, and are not limiting. Other applications and combinations of such applications will be apparent to persons skilled in the relevant art(s) based on the teachings contained herein. Such applications and combinations include, for example and without limitation, applications/combinations comprising and/or involving one or more of: (1) frequency translation; (2) frequency down-conversion; (3) frequency up-conversion; (4) receiving; (5) transmitting; (6) filtering; and/or (7) signal transmission and reception in environments containing potentially jamming signals.

Additional examples are set forth below describing applications of the UFT module with circuits that reduce or eliminate unwanted DC offset and re-radiation, and improve dynamic range.

7.0 DC Offset, Re-radiation, and Dynamic Range Considerations and Corrections

Various embodiments related to the method(s) and structure(s) described herein are presented in this section (and its subsections). Problems related to DC offset, re-radiation, and dynamic range are described below. Applications of the UFT module are provided in relation to circuits used to reduce or eliminate problems of DC offset and re-radiation, and to improve dynamic range.

These embodiments are described herein for purposes of illustration, and not limitation. The invention is not limited to these embodiments. Alternate embodiments (including equivalents, extensions, variations, deviations, etc., of the embodiments described herein) will be apparent to persons skilled in the relevant art(s) based on the teachings contained herein. The invention is intended and adapted to include such alternate embodiments.

7.1 Overview of DC Offset and Re-radiation

Receivers, and other electronic circuits, may suffer from problems of DC offset and re-radiation. Generally, "DC offset" refers to a DC voltage level that is added to a signal of interest by related circuitry. The related circuitry creates the DC offset voltage through a variety of mechanisms that are well known. Some of these mechanisms are discussed in further detail below. If a DC offset voltage value is significant, it can degrade the quality of the signal of interest. In a receiver, for example, the signal of interest may be a down-converted signal. Unless reduced or eliminated, the added DC offset voltage level may undesirably change the voltage value of the down-converted signal. As a result, the actual voltage value of the down-converted signal may be difficult to ascertain by down-stream processing.

Generally, "re-radiation" is an undesired phenomenon where a signal comprising one or more frequency components generated by receiving circuitry is transmitted by an antenna. For example, the frequency components may be generated by a local oscillator of the receiving circuitry. When transmitted, these frequency components may undesirably interfere with nearby receivers, or may be received back by the same antenna that transmitted them. When the frequency components are received back by the same antenna that transmitted them, this may be referred to "re-radiation recapture". The phenomenon of re-radiation recapture may further impair signals that are down-converted, and/or may cause undesirable DC offset voltages that may impair the down-converted signals. For instance, the re-radiated and recaptured signal may appear to the receiver as unwanted noise, within or without the frequency band(s) of interest, or may combine with local signals to create an undesired DC offset voltage. The phenomenon of creating a DC offset voltage by re-radiation recapture is described further below. Solutions provided herein for eliminating unwanted DC offset voltages apply to eliminating DC offset voltages produced from re-radiation recapture.

Furthermore, signals in a receiver circuit may travel or radiate to other receiver circuit sections, causing problems similar to those of re-radiation recapture described above, including problems of noise and DC offset voltages. For instance, local oscillator signals may undesirably transmit through the circuit substrate, through the air, or through other paths, to other receiver circuit sections, causing unwanted noise problems and problems with unwanted DC offset voltages being generated. Circuits provided herein for solving problems with DC offsets, re-radiation, and re-radiation recapture also apply to solving problems of noise and unwanted DC offset voltages caused by this phenomenon.

The concepts of DC offset and re-radiation are further described in the following sub-sections. Furthermore, example methods and systems are provided in subsequent sections below for reducing or eliminating unwanted DC offset and re-radiation. Such methods and systems can be used alone, or in combination with each other, to address offset issues.

7.1.1 Introduction

Embodiments of the UFT module may be used in many communications applications. For some of these applications, the signal space may include waveforms with near DC content. Such waveforms exist, for example, in signals transmitted at radio frequencies. Hence, it may be advantageous to limit the amount of artificial DC insertion or DC offsets contributed by the UFT module or its complimentary demodulation architecture.

This section presents an overview of DC offset contributions of the UFT module, and related circuitry, relevant for zero IF implementation. In addition, embodiments of the present invention are presented for reducing the adverse impacts of the DC offsets.

7.1.2 DC Offset Model Overview

FIG. **73** illustrates a down-conversion circuit **7300** according to an embodiment of the present invention. The down-conversion circuit **7300** of FIG. **73** provides a model that indicates possible DC offset contributions. Down-conversion circuit **7300** comprises a UFD module **7302**. UFD module **7302** comprises a UFT module (not shown).

There are at least three significant categories of offsets.

1. Clock Excitation or Charge Injected
2. Re-radiation Offsets
3. Intermodulation Distortion

Each category possesses its own mechanisms.

The following definitions in Table 1 set the backdrop for analysis and understanding of the offset phenomena from a high level model. At least some of the phenomena relevant to the discussion in terms of device physics may be lumped into one or more of the following model parameters.

$$R(t)=[r(t)+k_1k_2C_A(t'_A)+k_2k_BC_B(t'_B))+k_{LNA}+k_AC_A(t'_A)+k_BC_B(t'_B)C(t)+<|C(t)|>k_{c\lambda}. \quad \text{Eq. 29}$$

TABLE 1

$r(t) = s(t) + n(t);$.	r(t) is the received signal of interest which consists of a modulated carrier s(t) and a noise component n(t).
$k_1k_AC(t'_{A1})$ or $k_AC(t'_A)$	This signal is a conditioned clock 7304 or transient waveform, which leaks to the core input of UFD module 7302 across free-space, substrate, etc. t'_{A1} is a delayed time variable. $t_{AI} = t - t_A - t_1$ where t_A is the delay of the specific (A) path, and t_1 is the additional delay through the (1) path.
$k_2k_BC_B(t'_{B2})$ or $k_BC_B(t'_B)$	This signal is similar to the one described above except that the leakage paths and delays are different and the leakage signal is a raw clock 7306 rather than a conditioned clock 7304.
$<\lvert C(t)\rvert>k_{c\lambda}$	This is a signal which is self-generating at UFD 7302 module, and is derived from the charge injection phenomena at UFD 7302 module when the conditioned clock 7304 or control is active. Essentially, the conditioned clock C(t) is modified by a nonlinear operation (in this case an abs function) averaged or integrated over some interval and scaled by a gain constant $k_{c\lambda,1}$ and delayed by $t_{c\lambda}$. When C(t) is not active, then $<\lvert C(t)\rvert> \cdot k_{c\lambda,1}, \rightarrow 0$. This offset term is summed effectively at the output of UFD module 7302. < > denotes the expectation operation.
$^*k_{ff}$	Gain constant associated with feed forward charge injection path. This path is typically of interest when interferences are present. Usually, offsets will not be significant unless the S/I (Signal to Interference power) is very low and I is very large.

(*The charge injection path associated with k_{ff} has been ignored in Eq. 29. This component will be addressed separately in a subsequent section.)

There may be additional leakage terms, which are not illustrated in the model.

7.1.3 Clock Modulation via PN Code

A system and method for addressing DC offset, according to an embodiment of the present invention, involves modifying the LO (local oscillator) in such a manner that the offsets are randomized and spectrally spread. After some amount of amplification the randomized signal may be de-spread coherently. At least some of the offset, particularly that offset which is due to LO re-radiation, may be removed. FIG. **74** illustrates a down-conversion circuit **7400**, according to an embodiment of the present invention, that removes at least some offset. Down-conversion circuit **7400** comprises a UFD module **7402**. UFD module **7402** comprises a UFT module (not shown).

Although only a single down-conversion channel is illustrated in FIG. **74**, in alternative embodiments the architecture may be extended to include both I and Q, especially if two uncorrelated PN (Pseudo-random Noise) sequences are utilized. Other dual or multiple channel embodiments are also within the scope and spirit of the present invention. In an embodiment, the PN code or similar sequence is formed by a maximal length linear feed back shift register (or other logic) and is modulated onto the clock and pulse conditioned to form C(t). $C_{PN}(t')$ is the baseband PN sequence waveform. $C_{PN}(t')$ is virtually identical to $C_{PN}(t)$ except for a very small time shift. R'(t) may be given by:

$$R'(t)=k_{BB}R(t-t_{BB})(C_{PN}(t')) \quad \text{Eq. 30}$$

Which may be expanded to:

$$R'(t)k_{BB}[(r(t-t_{BB})C(t')+Z(t-t_{BB}))k_{LNA}+X(t-t_{BB})]C_{PN}(t)+(<\lvert\tilde{C}(t-t_{BB})\rvert>k_{c\lambda}k_{BB})C_{PN}(t') \quad \text{Eq. 31}$$

where:

$$Z(t)=(k_1k_AC(t'_{1A})+k_2k_BC_B(t'_{2B}))C(t)\ X(t)=(k_AC(t'_A)+k_BC_B(t'_B))C(t)\ t'_X\Delta(t-t_X)C(t)\cong C_A(t') \quad \text{Eq. 32}$$

It will be apparent to persons skilled in the relevant art(s) from the teaching herein that examination of these equations, combined with the knowledge that C(t) can be a pseudo random sequence, will reveal interesting cross correlations for the math provided above.

For the moment, delays on the order of sub-carrier cycle times and carrier cycle times may be ignored, thereby considering many of the delay terms to be zero. While this may not actually be the case, this does provide a substantially worst case bounding view of cross-correlation properties of the described signal in one dimension. The general result would apply to the I/Q complex signal representation. However, the first step for a single dimension is instructive and therefore provided. The cross-correlation R_{XX} is calculated as follows:

$$R_{XX}(t)\Delta<k_{BB}R(t)C_{PN}(t)>\approx<k_{BB}R(t-t_{BB})C_{PN}(t')> \quad \text{Eq. 33}$$

The result is:

$$R_{XX}(t)\cong<[k_{BB}k_{LNA}r(t)+k_{1A}k_{LNA}k_{BB}C(t)C_A(t)C_{PN}(t')+k_{2B}k_{LNA}k_{BB}C(t)C_B(t)C_{PN}(t')+k_{BB}k_AC_A(t')C(t)+k_{BB}k_BC_B(t)C_{PN}(t')+<\lvert\tilde{C}(t)\rvert>k_{c\lambda}\cdot k_{BB}C_{PN}(t')[> \quad \text{Eq. 34}$$

$C_{PN}(t)$, $C_A(t)$, r(t), and $C_B(t)$ average to zero over a long term, if $C_{PN}(t)$ is augmented. Even if r(t) does not average to zero, r(t) is not considered because it is the signal of interest. (NOTE: An "augmented" sequence refers to the process of chip stuffing as required to provide ideal code balance.)

It will be known to persons skilled in the relevant art(s) that C(t) and $C_B(t)$ are uncorrelated. It is also known that $\lvert C(t)\rvert$ and $C_{PN}(t)$ are uncorrelated when $C_{PN}(T)$ is bipolar. If the cross-correlations indicated above are in fact indicative of the process, then $R_{XX}(t)$ would approximately reduce to:

$$R_{XX}(t)\approx\rightarrow 0 \quad \text{Eq. 35}$$

$R_{XX}(t)$ represents the DC offset that exists due to LO re-radiation leaking into the front end of UFD module **7402** by some ancillary path, such that it is converted into band at the output of UFD module **7402** for the case where the leakage is synchronous in part or whole to the UFD module transform, plus charge injected offset. This synchronicity is actually rare for cases where k_{1A} or k_A is large. Typically those gains would be much less than 1.

What the above equation reveals is that little or no DC offset effects remain if $C_{PN}(t)$ and C(t) are balanced, bipolar sequences.

In this case, a spreading sequence, spreading rate, and sequence length are selected. This selection typically requires careful examination of the signaling scheme, data rate, etc. Also, the Cl path involving k_{ff} has not been accounted for in this analysis.

7.1.3.1 Interpretation of $R_{xx}(t)$ and Required Leakage

It may be desirable that $R_{xx}(t)$ be 3.16×10^{-6} volts peak in a 50Ω system for a number of applications. For a system design where the UFD module possesses an output impedance of 1 KΩ, a signal level of 63.2 μV peak may be tolerated (−100 dBm).

In embodiments, clock port or control port signals may swing as much as 2V peak internal to the UFD module. If 2 volts must be reduced to 63.2 μV at the UFD module output, then:

$$2V \cdot k_{c\lambda} < 63.2 \times 10^{-6}\, V_{peak} \therefore k_{c\lambda} < \frac{63.2 \times 10^{-6}}{2} \quad \text{Eq. 36}$$

Hence:

$$k_{c\lambda} < 31.6 \times 10^{-6} \sim < -90 \text{ dB(power)} \quad \text{Eq. 37}$$

Eq. 37 implies that the effective isolation from charge injected DC must be on the order of 90 dB (power) or greater at the UFD module in various embodiments.

In embodiments, it is unlikely that 90 dB of chip isolation would be achieved in a system-on-a-chip design. It may be more difficult to maintain isolations over temperature and production lots. In an embodiment, the suppression is such that the LO re-radiation in band @ 2450 MHZ for a n=5 system is −20 dBm.

A similar calculation for the aggregate LO re-radiation components reveals the requirement of approximately 100 dB suppression, effectively.

7.1.3.2 Charge Injected DC Offset

The charge injected DC offset phenomena may be modeled as some rectification of the clock or control port energy weighted by some gain constant, $k_{c\lambda}$. The amount of DC offset introduced at the output of the UFD module may be given as:

$$CI_{UFD\ DC} \triangleq (\langle|\tilde{C}(t)|\rangle) k_{c\lambda} \quad \text{Eq. 38}$$

However, it may also be of value to construct a picture more closely associated with how this term arises. Consider a down-conversion circuit **7500** shown in FIG. **75**, configured according to an embodiment of the present invention. Down-conversion circuit **7500** comprises a UFD module **7502**. UFD module **7502** comprises a UFT module (not shown). An equation can be written to describe the voltage at the output due to C(t). The complex domain equation is:

$$V_{OCI}(s) = V_C(s)\left(\frac{Z_L \cdot Z_s' C_{OLeff} \cdot s}{Z_L Z_C + Z_S' Z_C + Z_L \cdot Z_S') C_{OLeff} \cdot S + (Z_L + Z_S')}\right) \quad \text{Eq. 39}$$

$\mathcal{Z}_L \triangleq$ Complex Load Impedance $\left(\frac{R_L}{R_L C \cdot S + 1}\right)$

$Z_S' \triangleq$ Complex Source Impedance $\left(\mathcal{Z}_{D2D} + \frac{L \cdot S \mathcal{Z}_S(s)}{LS + \mathcal{Z}_S(s)}\right)$

$V_C(s) \triangleq$ Complex Clock Signal driving the *UFD* module

$V_{OCI} \triangleq$ The Complex Output Signal arising from clock activity at *UFD* module 7502. This component is considered as a voltage resulting from charge injection due to the parasitic C_{OLeff}

There are some high level considerations which reveal important aspects of the phenomena. The equation shows the following;

- When $V_C(s)$ is a pure DC waveform, V_{OCI} is zero. However, $V_C(t)$ does possess both a transient and DC offset component. If the DC offset component is zero then $V_C(t)$ would also be zero.
- As the frequency content of the transients in $V_C(s)$ are lower, then so too V_{OCI} will typically become lower. However, this perceived monotonic correspondence of V_{OCI} to frequency components $V_C(s)$ may not always hold because of resonances in the complex impedances surrounding UFD module **7502**. The DC offset performance of UFD module **7502** is a strong function of the Fourier signature for $V_C(t)$, as is further described below.
- When $C_{OLeff} \rightarrow$ zero, then $V_{OCI} \rightarrow$ zero.
- The lower the source impedance and the lower the load impedance, the lower V_{OCI} becomes.
- $\mathcal{Z}_{UFD\ module}$ tends to provide some isolation from input impedances over the frequency ranges where the real [$\mathcal{Z}_{UFD\ module}$] series component dominates. When real [$\mathcal{Z}_{UFD\ module}$] is significant, $\mathcal{Z}_L$ becomes a consideration concerning V_{OCI}.

C_{OLeff} is a parasitic which is well known and understood in conventional receiver systems. There are processes available which can reduce this parameter by a factor approaching 100. A value in one embodiment of UFD module **7502** would be on the order of:

$$C_{OLeff} \cong 120 \text{ pf} \quad \text{Eq. 40}$$

Hence, this could be reduced to 1–2 pf.

The amount of charge injected DC voltage variation at the output of UFD module **7502** is related to one or more of at least the following factors:

- $\mathcal{Z}_S(s)$: The Input Source Impedance, which is typically complex.
- L: This is a typically used bias inductor. Other arrangements are possible. This one is selected simply for illustration purposes.
- $\mathcal{Z}_C(s)$: The Output Impedance of the Clock Source (C(t)).
- C, R_L: Components utilized to load UFD module **7502**.
- C_{OLeff}: This capacitance is a process parasitic and is shown as an effective capacitor formed from several physical capacitors, which usually dominates in terms of charge injection path. Although shown on the output node it may be actually split between output and input of UFD module **7502**. In fact, the input typically provides a significant LO re-radiation path.
- $\mathcal{Z}_{UFD\ module}$: Internal Impedance of UFD module **7502**.

Because $\mathcal{Z}_S$, $\mathcal{Z}_L$, and $\mathcal{Z}_C$ are all complex impedances, there is always the chance that resonance's may occur for certain C_{OLeff}, such that V_{OCI} could possess local maxima even as C_{OLeff} decreases. In the case where $\mathcal{Z}_{UFD\ module}$, $\mathcal{Z}_L$, $\mathcal{Z}_S$, and $\mathcal{Z}_C$ are dominated by real parts, the injection attenuation gains in dropping C_{OLeff} from 120 pf to 2 pf are enormous. These attenuation gains may be roughly 35 dB in power, and half that in voltage. Hence, DC offset due to charge injection may be significantly attenuated by process control. An example of process control may be related to moving from CMOS (Complementary Metal Oxide Semiconductor) to DMOS (Double Diffused Metal Oxide Semiconductor). There are processes available which may include both CMOS and DMOS on the same substrate, possibly providing important performance options, particularly in the domain of gate overlap capacitance control. The effective gate overlap capacitance C_{OLeff} is a chief offender, which results from process oxide capacitance in conjunction with overlap parasitics related to transistor geometries.

Another method of artificially decreasing C_{OLeff} is by changing $\mathcal{Z}_C$ to incorporate a series capacitor, which is much lower than C_{OLeff}. However, this must be done carefully to avoid negative substrate transients. A further useful circuit model allows

$$Z'_S \to 0, Z_C \to 0, Z_{D2D} \to 0, Z_L \to \frac{1}{sC}.$$

An embodiment of this circuit is shown in FIG. **76**, as down-conversion circuit **7600**. Down-conversion circuit **7600** comprises a UFD module **7602**. UFD module **7602** comprises a UFT module (not shown). Under these conditions:

$$V_{OCI} \approx \left(\frac{C_{OX}}{2C}\right)(W \cdot L)(V_{cp} - V_T - V_{in}) \quad \text{Eq. 41}$$

where:

$C_{OX}\Delta$	Oxide Capacitance, Function of Process.
W, LΔ	Fundamental Geometries related to the UFD module, which affect parasitic overlap capacitances.
$V_{cp}\Delta$	Conditioned Clock Peak Excursion (unfiltered).
$V_T\Delta$	Threshold Voltage related to the Process.

Eq. 41 relates directly to the device physics of the UFD module. C_{OLeff} relates to C_{OX} and the parasitics formed due to W and L.

This model has some practical application because it can be used to predict compromises in the charge injection DC offset due to UFD module **7602** process parameters and the output capacitor C. For example, the model can predict, to a reasonable approximation, the results of a corresponding simulation. In the situations where Z'_S, Z_C, and Z_{UFD} *module* may not be precisely known, a circuit designer may at least select approximate specifications for UFD module **7602** designs using the simple model, and add more accurate impedances as they become known. Furthermore, to the degree C_{OX}, W, L, V_T, and V_{cp} can be manipulated, the more V_{OCI} can be reduced.

7.1.3.3 Clock Waveform Impact on CI Induced Offsets

The previous section illustrated that the clock waveform can impact the efficiency of CI DC offset build up. This is an important concept because clock design is integral to the UFD module theory. The following formulation provides a Fourier series representation for a general clock pulse, and provides some insight into the frequency content of the excitation clock. The DC introduced by charge injection is a strong function of complex impedances around the UFD module. Signals which stimulate the UFD module may also play a role in the DC offset, depending on the clock signal's Fourier signature.

Clock pulse train $V_C(t)$ may be represented by a Fourier series as follows:

$$V_C(t) = \frac{V_{cp}T_A}{4} + \sum_{n=1}^{\infty} 2V_{cp}\left(\frac{\sin(n\pi T_A/2)}{n\pi}\right)\left(\cos\left(\frac{2n\pi t}{T_S}\right)\right) \quad \text{Eq. 42}$$

An ideal rectangular clock pulse is illustrated in FIG. **77**A, with zero rise and fall time. This may be considered to be a worst case scenario. In reality the clock waveform will consist of a repeating pulse train with a basic pulse shape possessing finite, non-zero, rise, and fall times.

The calculated Fourier series for $V_C(t)$ is a well known result for sampling devices. As T_A decreases, the Fourier spectrum extends ever greater in the frequency domain with significant harmonics.

FIG. **77**B illustrates that the spectrum is a "picket fence" with harmonics separated by $f_S=T_S^{-1}$, and nulls at $N \cdot f_a$, where $f_a=T_A^{-1}$. Hence, the greater the value of ratio T_S/T_A, the greater the number of harmonics out to the first null, and the greater number of components, spectrally, which can excite the process parasitic at higher and higher frequencies.

A sequence of plots in FIGS. **79**–**83** and **86**A illustrate this concept of clock waveform attributes and relationship to the DC offset.

FIG. **78** illustrates a down-conversion circuit **7800** used to determine DC offset due to charge injection, and possibly LO feed through, according to an embodiment of the present invention. Down-conversion circuit **7800** comprises a UFD module **7802**. UFD module **7802** comprises a UFT module (not shown).

FIG. **79** shows the offset obtained with 3 different clock pulse widths (T_A) for the circuit of FIG. **78**. The clock is configured to operate on a 2.4–2.5 GHz band signal using a 5th harmonic technique. The clock for the offset plots of FIG. **79** was selected to down-convert 2.45 GHz.

FIG. **79** shows that longer pulse widths may produce lower CI related offsets. FIG. **80** illustrates a situation similar to that of FIG. **79** utilizing a 3rd harmonic clock approach. As shown in FIG. **80**, reducing the clock frequency components did not continue to reduce V_{OCI}. This may be due in part to the surrounding complex impedances which will possess local resonances or favor certain Fourier spectrums.

The circuitry surrounding UFD module **7802** may affect overall circuit performance. For example, FIG. **81** shows offsets obtained using slightly lower bond wire inductance. FIG. **81** illustrates how the results of FIG. **79** may be affected by these changes.

FIG. **82** illustrates the case of a fixed 204 ps T_A with 10 ps rise and fall times while permitting a variation in bond wire inductance. FIG. **82** indicates that lower inductance may be better in some situations.

The previous plots related to cases with clock waveforms $V_C(t)$ possessing 10 ps rise and fall times. FIG. **83** illustrates the V_{OCI} response for a variety of rise and fall times, 204 ps T_A, and 5th harmonic operation.

It is interesting to note that there are two local minima for the DC offset performance with fast rise times representing one of those cases. This implies resonance in the complex impedances surrounding (and including) UFD module **7802**. Different circuit topologies will behave differently and different component types would operate differently due to their own parasitic elements. In addition, stretching to a 3x or 5x aperture would produce different results.

7.1.3.4 Bench Example

Experiments were conducted with hardware designed to operate in the 2.4 GHz ISM (Industry, Scientific, and Medical) band. 5th harmonic mode was utilized for the clock, with the clock rate being varied between 482.4 MHZ and 492.4 MHZ. The UFD module configuration was an I/Q receiver with matching networks and DC coupling. The input to the I/Q assembly was terminated with 50Ω.

The charts shown in FIGS. **84**A, **84**B, **85**A, and **85**B record the results on the I port for a variety of LO drive levels and 3 operating channels, for two different assemblies: one with a clock port match and one without.

7.1.3.5 Complementary Architecture

Up to this point the UFD module cores analyzed have been based on a non-complimentary structure. Complementary structures can be used with the important advantage of lower UFD module losses and greater **IP2**, **IP3** performance. In addition, some charge injection cancellation should be possible. The results in FIG. **86**A correspond to results recorded in FIG. **79**. Careful examination shows that there

may be a 4.25 dB reduction in CI induced DC offset possibly attributed either to the complementary UFD module architecture or the resulting modification to Z_{UFD} *module*.

7.1.3.6 Spreading Code Results

Sections 7.1.3 and 7.1.3.1 outline the concept of using a local PN code to reduce the DC offset generated at a UFD module, or created due to LO re-radiation recapture. Maximal length codes, balanced codes, and other related code types may be used. Furthermore, the statistical properties of a code may be tailored in the time domain or frequency domain to accomplish desired DC reduction while minimizing the impact to the desired signal.

Experiments have been accomplished with UFD module circuit embodiments to illustrate the potential of these techniques. FIG. **86**B shows an example spectral plot of a carrier tone at RF, corresponding to LO re-radiation at a UFD module.

FIG. **86**C illustrates the LO re-radiation spectrum shown in FIG. **86**B after modulation by an example modified maximal length linear PN sequence. In this example, the power spectral density is substantially modified by the code. On average, the power spectral density has been lowered by approximately 32 dB. This benefit may not be completely obtained unless the specification desired for re-radiation is referenced to the resolution bandwidth of the analyzer sweep. This is adjusted for wider bandwidth (faster) PN sequences with long repetition intervals. That is, the processing gain of interest here is the bandwidth expansion factor:

$$BW_E = \frac{BW_{pn}}{resBW_{spec}} \qquad \text{Eq. 43}$$

Where:

$BW_E \triangleq$ Bandwidth expansion factor(unitless)

$BW_{pn} \triangleq$ Double Sided Bandwidth of *PN* Sequence

$res\ BW_{spec} \triangleq$ Resolution bandwidth for a particular re-radiation specification that is dictated by standards or regulatory agency.

Then:

$$P_{BW} = 10\log_{10}(BW_E)\text{dB} \qquad \text{Eq. 44}$$

P_{BW} is the effective processing gain due to LO bandwidth expansion factor alone, that is attained by using a special sequence at a UFD module clock port superposed on the clock. To some extent, BW_{pn} can be adjusted for a desired effect, although there may be other practical system constraints.

As predicted by equations in section 7.1.3, the DC offset at a UFD module output may be canceled using a special sequence, its correlation properties, and its effective system processing gain.

FIG. **86**D shows an example PN modulated output of a UFD module configured to receive a 870 MHZ RF signal with a slight carrier frequency offset. A beat note represents the slight carrier offset (envelope of the baseband). In addition, the PN code impressed on the received signal by the special UFD module clock signal is visible.

The signal illustrated in FIG. **86**D possesses substantial DC offset. FIG. **86**E illustrates the result after PN rectification or correlation. The DC offset produces a PN code summed to the desired signal while the balanced PN modulation envelope is removed by correlation. The power in the remaining summed PN signal is directly proportional to the original UFD module DC offset plus all system offsets thereafter up to the post-correlator. The bandwidth of this ancillary PN code power is substantially wider than the bandwidth of the baseband signal by design. Hence, the post filter (sometimes a baseband matched filter) can remove much of the variance of the PN sequence. FIG. **86**F illustrates the low pass output to recover the baseband beat note.

A goal is to choose an effective system processing gain PG_{sys}, which is high enough to drive significant variance from the low pass result. PG_{sys} is defined as follows:

$$PG_{sys} \triangleq 10\log_{10}\frac{(BW_{pn}/2)}{BW_{MF}} \qquad \text{Eq. 45}$$

$BW_{pn} \triangleq$ Double Sided *PN* Code Bandwidth

$BW_{MF} \triangleq$ *BB* Filter Bandwidth

The example run in the lab utilized a 10 kHz baseband signal bandwidth and a spreading rate of 5 MHz. In addition, the code was modified as an RZ type. This technique may not provide all of the DC cancellation required but can be a powerful tool for many applications.

7.1.4 UFD Module DC Offsets From Non-linearities

Because the UFD module is at least a conversion device, an intercept point will determine output waveform integrity to a large extent. Two tone 2nd order intercept and two tone 3rd order intercept points are important. In particular, the two tone second order intercept point, $IP2_{IN}$, relates to DC offset. As the input begins to approach the UFD module rails, harmonic spectrums are generated in the signal path. Because the UFD module clock may excite harmonics, each harmonic spectrum may down-convert to DC, adding some DC offset. Because the phases of the down-conversion harmonics generally are complicated, the resulting DC offset may be non-systematic, even though the process is predictable by using complex math.

FIG. **86**G illustrates an exemplary signal input harmonic spectrum and conversion clock harmonic spectrum. The harmonic spectrums for the input signal at f_2 and f_3 become more significant as the UFD module is pushed harder on its input.

Another concept useful in considering the $IP2_{IN}$ mechanism comes from a different view on the frequency doubling phenomena. Frequency doubling occurs in a square law device. Hence, for the 2nd order term, the non-linearity from the UFD module output may be approximated by;

$$(\tilde{A}(t)\cos(\omega_0 t+\phi(t)))^2 = \tfrac{1}{2}\tilde{A}(t)_2(1+\cos(2\omega_0 t+2\phi(t))) \qquad \text{Eq. 46}$$

$\tilde{A}(t) \triangleq$ Amplitude Domain Modulation

$\phi\tilde{A}(t) \triangleq$ Phase Domain Modulation

$\tilde{A}(t)$ could represent the complex envelope of modulation from information impressed on the carrier (as well as noise). Likewise, $\phi(t)$ could contain information modulated onto the carrier as well as phase noise. The above equation illustrates that the 2x frequency component can be formed from the non-linearity but that $\tilde{A}(t)^2$ is also formed. The equation indicates that a DC component results from the squared envelope. This DC component is not desirable. Likewise, higher order intermodulation can contribute to the problem, particularly even order terms.

In general, the output voltage of a non-linear system can be expanded in terms of its input voltage by a power series of the form shown in FIG. **86**H. Usually it is difficult to

predict k_1, k_2 . . . precisely. Extending properties of linear systems to non-linear system descriptions permits another useful and more general equation:

$$y_n(t)=\int_{\infty}^{\infty} \ldots \int k_n(u_1,u_2, \ldots u_n)X(t-u_1)X(t-u_2) \ldots X(t-u_n du_1,du_2 \ldots du_n) \quad \text{Eq. 47}$$

where y_n (t) is the system output and X(t) is the system input. This is the so called nth order impulse response for the system, found by an n-fold convolution kernel. FIG. **86I** shows a block diagram representation of this system.

$y_1(t)$ is the desired linear impulse response of the system. $y_2(t)$ is the two-dimensional system convolution involving X(t). $y_3(t)$ is the three-dimensional convolution of X(t) and the impulse response $h_3(u_1,u_2,u_3)$, etc. This is known as the Volterra functional series representation of a system. For weak non-linearities, the first 3 terms of the series may provide enough information to characterize a system. This is the case for many communications systems.

Such nth order analysis in practice is often complex and tedious, yielding only a general feel for the expected result, unless circuit and network models are extraordinarily accurate. Nevertheless, in the approximation, the 2nd order term relating to the two tone 2nd order input intercept ($IP2_{IN}$) is one useful metric for measuring down-conversion linearity. Essentially, the DC offset from $IP2_{IN}$ is bounded at the upper end by the power of the 2nd order harmonic.

For instance, suppose that it is desired to suppress the power of the 2nd order term by 20 dB in a direct down-conversion device (no interference present). If the highest expected input RF signal of interest is −25 dBm, the system will require an input intercept ($IP2_{IN}$) of −5 dBm. This establishes a signal-to-DC offset ratio of at least 20 dB due to the 2nd order non linearity.

Now consider the case where other unwanted signals are present at the input to the non-linearity along with the signal of interest. Suppose the RF signal is at a level of −101 dBm, while the interference tone is a level of −30 dBm. Furthermore, assume that the system noise floor is near enough to −101 under linear conditions such that we desire an additional 10 dB margin on any 2nd order non-linearity folded back in band, so that our benchmark at 101 dBm is not affected.

$$IP2_{IN}=(-30+111)-30=51 \text{ dB} \quad \text{Eq. 48}$$

Therefore, $IP2_{IN}$ can become a significant specification when an interference or blocking tone is considered, and unfiltered due to a zero IF architecture.

This type of non-linear effect is dependent on input signal power to a great extent. Because the phenomenon is based on even-order intermods, differential design can cancel a significant portion of the difficulty, but imbalance may not remove it all. For instance, suppose that the input to the UFD module is at −15 dBm due to an LNA in front of the down-conversion. Suppose this is an interfering tone. Also, assume a 1KΩ baseband operating impedance and a 12 dB UFD module conversion loss. The suppression of the $IP2_{IN}$ at the UFD module output is then:

$$DC(IP2) \leqq -15-12-8 \quad \text{Eq. 49}$$

If the desired suppression is 81 dB, the output offset into 1KΩ is less than 0.126 mV due to 2nd order non linearities. This may be accommodated with an op amp circuit, for example. If a differential architecture is assumed, then arguably this signal can be processed in terms of common mode range.

In fact, in embodiments a UFD module with $IP2_{IN}$ of +40 dBm could be tolerated if 10 dB of cancellation is available from a differential architecture. Differential architectures may extend as great as a 30 dB benefit, for example, without special trimming.

7.2 Example Embodiments to Address DC Offset and Re-radiation Problems

Section 7.1 above discussed problems related to DC offset and re-radiation that occur during and after the down-conversion process, and were provided for illustrative purposes, and are not limiting. Embodiments were also provided for reducing or eliminating unwanted DC offset and re-radiation using techniques of spectral spreading followed by de-spreading, according to the present invention. Various embodiments related to the problems, method(s), and structure(s) described above are presented in this section (and its subsections). In particular, further applications of the UFT module are provided below in circuit configurations that reduce or eliminate problems of DC offset and re-radiation.

These embodiments are described herein for purposes of illustration, and not limitation. The invention is not limited to these embodiments. Alternate embodiments (including equivalents, extensions, variations, deviations, etc., of the embodiments described herein) will be apparent to persons skilled in the relevant art(s) based on the teachings contained herein. The invention is intended and adapted to include such alternate embodiments.

7.2.1 DC Offset

Exemplary embodiments are provided below for reducing or eliminating unwanted DC offset voltages. These unwanted DC offset voltages include unwanted DC offset voltages created by any source, including non-ideal circuit component operation, re-radiation recapture, local circuit signals traveling or radiating to other circuit sections, etc. The embodiments provided below are not limited to this use, but may have additional applications. For example, these embodiments may be applicable to reducing or eliminating unwanted circuit re-radiation.

7.2.1.1 Reducing DC Offset by Spectral Spreading and De-spreading

Embodiments for reducing DC offset by spectral spreading and de-spreading, as described above, are further described in the following sub-sections, and additional related embodiments are presented.

7.2.1.1.1 Conventional Wireless Communications Receiver

FIG. **87** shows an example conventional wireless communications down-conversion system **8700**. Down-conversion system **8700** comprises a down-conversion module **8702** and an amplifier **8704**. Down-conversion module **8702** typically comprises a super-heterodyne receiver. Down-conversion module **8702** may comprise multiple down-conversion stages. Amplifier **8704** may comprise an amplifier, a filter, other signal processing component(s), or any combination thereof.

Down-conversion module **8702** down-converts a modulated carrier signal **8706**, according to at least one local oscillator signal **8708**, to a down-converted baseband signal **8710**.

Down-converted baseband signal **8710** is input to amplifier **8704**. Amplifier **8704** amplifies, filters, and/or otherwise processes down-converted signal **8710**, and outputs baseband signal **8712**.

As described above, and shown in FIG. **87**, DC offsets due to local oscillator signal **8708** may be input to the signal path at several points, with some possible points indicated by charge leakage and charge injection paths **8714**, **8716**, and **8718**. As described above, charge leakage and charge injec-

tion are well known effects. These DC offsets disadvantageously affect at least the dynamic range and accuracy of baseband signal **8712**. For instance, adding a significant DC offset to baseband signal **8712** may cause the output of subsequent amplifiers in the baseband signal path to approach the level of their power supplies, potentially causing the amplifiers to rail or become non-linear.

7.2.1.1.2 Spread/De-spread Receiver Embodiments of the Present Invention

An embodiment of the present invention addresses undesired DC offsets described above by modifying the local oscillator in such a manner that offsets are randomized and spectrally spread. This pseudo-random local oscillator signal is used to down-convert an input signal, such as a modulated carrier signal, and spread the spectrum of the down-converted signal. After some amount of amplification, filtering, and/or other optional processing, the randomized down-converted signal may be spectrally de-spread to a baseband signal. Because the down-converted signal is spectrally de-spread, offsets are spectrally spread. At least some of the offset, particularly the offset due to local oscillator re-radiation, is reduced or removed from the resulting baseband signal. The offset is spread over a frequency range.

FIG. **88**A shows an exemplary spreader/de-spreader down-conversion system **8800**, according to an embodiment of the present invention. Spreader/de-spreader down-converter system **8800** comprises a UFD module **8802**, an amplifier **8804**, a first multiplier **8806**, a second multiplier **8808**, an oscillator **8826**, a pulse shaping circuit **8828**, and a code generator **8832**. UFD module **8802** comprises at least one UFT module. Amplifier **8804** may introduce an unwanted DC offset voltage onto a signal being down-converted by system **8800**. Spreader/de-spreader down-conversion system **8800** operates to reduce or eliminate this unwanted DC offset voltage.

Oscillator **8826** outputs oscillating signal **8830**. FIG. **88**C shows an example waveform for oscillating signal **8830**. Oscillating signal **8830** is preferably a periodic sine wave, but may be other periodic signal waveforms such as square wave, triangle wave, ramp wave, and other waveforms.

Code generator **8832** outputs coded sequence signal **8816**. Coded sequence signal **8816** is preferably a signal coded according to a pseudo-random code sequence. For example, acceptable pseudo-random coding includes PN coding. Other applicable code schemes such as are also within the scope of the present invention, such as square waves and Manchester encoding. FIG. **88**D shows at least a portion of an example coded sequence signal **8816**.

First multiplier **8806** receives oscillating signal **8830** and coded sequence signal **8816**. First multiplier **8806** multiplies oscillating signal **8830** and coded sequence signal **8816**, and outputs a coded oscillating signal **8814**. Coded oscillating signal **8814** comprises at least some cycles of oscillating signal **8830** modified (or spread or coded) according to coded sequence signal **8816**. FIG. **88**E shows an example waveform for coded oscillating signal **8814**.

In a preferred embodiment, when coded sequence signal **8816** is a "high" signal and/or represents a "1", the phase of corresponding cycle(s) of oscillating signal **8830** are not modified, and when coded sequence signal **8816** is a "low" signal and/or represents a "0" or a "−1", the phase of corresponding cycle(s) of coded oscillating signal **8814** are shifted **180** degrees. For example, as shown in FIG. **88**H, in the time that occurs prior to time line **8834**, coded sequence signal **8816** is high, and hence coded oscillating signal **8814** is essentially equal to oscillating signal **8830**. In the time occurring between time lines **8834** and **8836**, coded sequence signal **8816** is low, and hence coded oscillating signal **8814** is essentially equal to oscillating signal **8830** with its phase shifted by 180 degrees.

Pulse-shaping circuit **8828** inputs coded oscillating signal **8814**. The output of pulse-shaping circuit **8828** is a coded control signal **8818**, which preferably comprises a string of pulses. Coded control signal **8818** comprises at least some pulses that are modified (or spread or coded) according to coded sequence signal **8816**. FIG. **88**F shows an example waveform for coded control signal **8818**. Pulse-shaping circuit **8828** controls the pulse width of pulses of coded control signal **8818**.

UFD module **8802** receives an input RF signal **8812** (although it could be an unmodulated signal) and coded control signal **8818**. FIG. **88**B shows an example waveform for input RF signal **8812**. UFD module **8802** frequency down-converts and spectrally spreads input RF signal **8812** to down-converted spread spectrum signal **8820**, according to coded control signal **8818**. FIG. **88**G shows an example waveform for down-converted spread spectrum signal **8820**.

For example, FIG. **88**F shows an embodiment where coded control signal **8818** is PN coded. For a positive PN code chip (for example, prior to time line **8834**), the input RF signal **8812** is effectively down-converted to down-converted spread spectrums signal **8820** in a normal, non-inverted fashion. For a negative PN code chip (for example, between time lines **8834** and **8836**), the phase of one or more cycles of coded control signal **8818** are shifted by **180** degrees, and therefore the opposite phase of input RF signal **8812** is sampled. Hence, for a negative PN code chip, a segment of input RF signal **8812** is effectively inverted and down-converted to down-converted spread spectrum signal **8820**.

Down-converted spread spectrum signal **8820** is optionally amplified and/or otherwise processed by amplifier **8804** (or other circuitry or processing modules), and a processed down-converted spread spectrum signal **8822** results.

Unwanted DC offset may be summed into down-converted spread spectrum signal **8820** during and after down-conversion and spectral spreading, and during and after processing by amplifier **8804**.

Second multiplier **8808** receives coded sequence signal **8816** and processed down-converted spread spectrum signal **8822**. Second multiplier **8808** multiplies coded sequence signal **8816** and amplified down-converted spread spectrum signal **8822**. Down-converted spread spectrum signal **8822** is spectrally de-spread in second multiplier **8808**, and baseband signal **8824** is output. FIG. **88**H shows an example waveform for baseband signal **8824**. The unwanted DC offset is spectrally spread in second multiplier **8808**, reducing or removing the offset from baseband signal **8822**. Baseband signal **8822** may be a baseband information signal, or may be an intermediate frequency (IF) signal.

For example, in an embodiment using PN coding, for a positive PN code chip, amplified down-converted spread spectrum signal **8822** is multiplied by 1 (not inverted) in second multiplier **8808**. For a negative PN code chip, the amplified down-converted spread spectrum signal **8822** is multiplied by −1 (inverted). In this manner down-converted spread spectrum signal **8822** is spectrally de-spread.

FIG. **88**H shows a pulse **8838** in the example waveform of baseband signal **8824**. Pulse **8838** may result from the phase shift of coded oscillating signal **8814** in multiplier **8806** causing a delay between edges of coded sequence signal **8816** and down-converted spread spectrum signal **8820**. In preferred embodiments, each chip or pulse of

control signal **8816** may be equal in length to a substantial number of cycles of oscillating signal **8830**, potentially in the hundreds or greater (the example of FIG. **88**H does not show this). Because of this, pulse **8838** will occur relatively infrequently on baseband signal **8824**, is of high frequency relative to baseband signal **8824**, and hence may be filtered out of baseband signal **8824** by a conventional filter.

Although only a single down-conversion channel is illustrated in the example embodiment of FIG. **88**A, the present invention may be extended to two or more channel embodiments, including I/Q modulation system embodiments. The spreading sequence, spreading rate, and sequence length may be selected according to the signaling scheme, data rate, and other factors, as would be apparent to persons skilled in the relevant art(s) from the teachings contained herein. Furthermore, the present invention is applicable to conventional down-converter embodiments, such as shown in FIG. **89**.

FIG. **108** depicts a flowchart **10800** that illustrates operational steps corresponding to the structures of FIGS. **88**A and **89**, for down-converting and spectrally spreading an input signal, according to an embodiment of the present invention. The invention is not limited to this operational description. Rather, it will be apparent to persons skilled in the relevant art(s) from the teachings herein that other operational control flows are within the scope and spirit of the present invention. In the following discussion, the steps in FIG. **108** will be described.

In step **10802**, an input signal is down-converted. In embodiments, the input signal is down-converted with a universal frequency down-conversion module according to a coded control signal.

In step **10804**, the down-converted input signal is spectrally spread to a down-converted spread spectrum signal. In embodiments, step **10804** may be at least partially integral with step **10802**.

In step **10806**, the down-converted spread spectrum signal is processed. For instance, the down-converted spread spectrum signal may be amplified, filtered, or otherwise processed, as further described above. Furthermore, a DC offset voltage may be summed with the down-converted spread spectrum signal, as described further above.

In step **10808**, the down-converted spread spectrum signal is spectrally de-spread to a baseband signal. The down-converted spread spectrum signal is multiplied with a code used to code the control signal. Furthermore, during this step, the DC offset voltage is spectrally spread, as further described above.

For illustrative purposes, the operation of the invention is often represented by flowcharts, such as flowchart **10800** in FIG. **108**. It should be understood, however, that the use of flowcharts is for illustrative purposes only, and is not limiting. For example, the invention is not limited to the operational embodiment(s) represented by the flowcharts. Instead, alternative operational embodiments will be apparent to persons skilled in the relevant art(s) based on the discussion contained herein. Also, the use of flowcharts should not be interpreted as limiting the invention to discrete or digital operation. In practice, as will be appreciated by persons skilled in the relevant art(s) based on the herein discussion, the invention can be achieved via discrete or continuous operation, or a combination thereof. Further, the flow of control represented by the flowcharts is provided for illustrative purposes only. Steps may occur in a different order than shown. Furthermore, as will be appreciated by persons skilled in the relevant art(s), other operational control flows are within the scope and spirit of the present invention.

7.2.1.3 Charge Injection Reduction Embodiment

The spectral spreading/de-spreading embodiments described above reduce or eliminate DC offset from a variety of sources. In this section, an alternative embodiment, according to the present invention, is provided for reducing or eliminating DC offset due at least to charge injection. FIG. **90** illustrates some aspects of charge injection related to the present invention. FIG. **90** shows a UFD module **9000** comprising a UFT module **9002**, a storage device **9004**, and a reference potential **9006**. In an embodiment, UFT module **9002** comprises a MOSFET **9008**, and storage device **9004** comprises a capacitor **9010**, although the invention is not limited to this example.

An input RF signal **9014** is received by a first terminal **9028** of MOSFET **9008**. A control signal **9018** is received by a second terminal **9030** of MOSFET **9008**. A third terminal **9032** of MOSFET **9008** is coupled to a first terminal **9034** of storage device **9004**. A second terminal **9036** of storage device **9004** is coupled to reference potential **9006** such as a ground **9012**, or some other potential. In an embodiment, MOSFET **9008** contained within UFT module **9002** opens and closes as a function of control signal **9018**. As a result of the opening and closing of this switch, a down-converted signal, referred to as output signal **9016**, results.

A well known phenomenon called charge injection may occur in such a switching environment. As control signal **9018** applies a pulse waveform to the gate of MOSFET **9008**, MOSFET **9008** is caused to open and close. During this operation, charge allowed to flow along a DC path **9024** may build on the gate-to-drain and/or gate-to-source junctions of MOSFET **9008**, as indicated on FIG. **90** as charge buildup **9020** (note that the source and drain terminals of MOSFET **9008** are essentially interchangeable). Charge buildup **9020** may leak from MOSFET **9020** through leakage path **9022**, and become stored on capacitor **9010**. This charge that becomes stored on capacitor **9010** may cause a change in the voltage across capacitor **9010**. This voltage change may accordingly appear on output signal **9016** as a potentially non-negligible DC offset voltage. This non-negligible DC offset voltage on output signal **9016** may lead to difficulties in recovering the baseband information content of output signal **9016**. Hence, it would be advantageous to reduce or prevent this potential generation of DC offset voltage caused by this interaction of control signal **9018** with UFD module **9000**.

FIG. **91** illustrates an exemplary circuit configuration for reducing unwanted DC offset voltage caused by charge injection, according to an embodiment of the present invention.

FIG. **91** shows UFD module **9000** of FIG. **90**, with a capacitor **9126** coupled between input RF signal **9014** and UFD module **9000**. Capacitor **9126** is preferably a small valued capacitor, such as, but not limited to, 10 pF. The value for capacitor **9126** will vary depending upon the application, and accordingly its characteristics are implementation and application specific. Capacitor **9126** prevents DC current from flowing along the path shown as DC path **9024** in FIG. **90**, and thus reduces or prevents the flow of charge to, and build up of charge on capacitor **9010**. This in turn reduces or prevents a DC offset voltage resulting from the above described charge injection from appearing on output signal **9016**. Hence, the baseband information content of output signal **9016** may be more accurately ascertained.

FIG. **109** depicts a flowchart **10900** that illustrates operational steps corresponding to FIG. **91**, for down-converting an input signal and reducing a DC offset voltage, according to an embodiment of the present invention. The invention is

not limited to this operational description. Rather, it will be apparent to persons skilled in the relevant art(s) from the teachings herein that other operational control flows are within the scope and spirit of the present invention. In the following discussion, the steps in FIG. **109** will be described.

In step **10902**, an input signal is coupled by a series capacitor to an input of a universal frequency down-conversion module.

In step **10904**, the input signal is frequency down-converted with the universal frequency down-conversion module to a down-converted signal. The input signal is down-converted according to a control signal. The control signal under-samples the input signal.

In step **10906**, a DC offset voltage in the down-converted signal generated during step **10904** is reduced. In an embodiment, the DC offset voltage is generated at least by charge injection effects due to interaction of the control signal with the universal frequency down-conversion module, as further described above.

It should be understood that the above examples are provided for illustrative purposes only. The invention is not limited to this embodiment. Alternate embodiments (including equivalents, extensions, variations, deviations, etc., of the embodiments described herein) will be apparent to persons skilled in the relevant art(s) based on the teachings contained herein. The invention is intended and adapted to include such alternate embodiments.

7.2.1.4 Auto-zero Compensation

Unwanted DC offset may be injected by circuit components in the intermediate frequency (IF) processing path or baseband processing path following a UFD module. In some cases, this DC offset voltage must be reduced or eliminated. In some situations, the output signal down-converted by the UFD module may be a low level signal, where even small DC offsets inserted by components following the UFD module may undesirably affect its value.

The previous section described inserting a series capacitor prior to the UFD module to reduce DC offset voltages due to charge injection. In embodiments, a capacitor may be added in series in the baseband processing path after a UFD module to reduce or eliminate DC offset voltages. In some situations, however, adding a capacitor in series in the baseband processing path after the UFD module is not desirable. For instance, in some situations, it may be difficult to charge such a series capacitor reliably.

FIG. **92**A illustrates an exemplary down-conversion system **9252**, according to an embodiment of the present invention, that may be used to indicate potential points in a signal path where DC offset voltages may be injected. Down-conversion system **9252** comprises a UFD module **9246**, a filter **9248**, an amplifier **9202**, and an optional IF down-converter **9250**. UFD module **9246** comprises a UFT module **9254**. UFD module **9246** down-converts an input RF signal **9256**, as described elsewhere herein, and outputs a down-converted signal **9258**. Down-converted signal **9258** may be a baseband signal, in which case IF down-converter **9250** is not required, or may be an intermediate frequency signal. Filter **9248** receives and filters down-converted signal **9258**, and outputs a filtered signal **9260**. Amplifier **9202** receives and amplifies filtered signal **9260**, and outputs an amplified signal **9262**. Optional IF down-converter **9250**, when present, receives and further down-converts amplified signal **9262**, and outputs an output signal **9264**. Additional IF down-converter modules may be included as needed.

UFD module **9246**, filter **9248**, amplifier **9202**, and optional IF down-converter **9250** may each add a DC offset voltage to their respective outputs signals. As described above, the DC offset voltage may undesirably affect the value of the down-converted signal. It would be desirable to provide a circuit that may be inserted for any of the components shown in FIG. **92**A (such as following such components), and any other applicable circuit components, to eliminate DC offset voltages at that point.

FIG. **92**B illustrates an exemplary auto-zero compensation circuit **9200** for reducing or eliminating DC offset inserted by any of the above described circuit components, with amplifier **9202** of FIG. **92**A shown as an example, according to an embodiment of the present invention. The present invention is also applicable to reducing or eliminating DC offsets inserted by other types of circuit components.

In the example circuit shown, auto-zero compensation circuit **9200** is located following amplifier **9202** (see also FIG. **92**A). In other implementations, auto-zero compensation circuit **9200** may follow any applicable circuit component in the down-converted signal path, including a UFD module. While amplifier **9202** is located in the down-converted signal path, components of auto-zero compensation circuit **9200** are located largely outside of the down-converted signal path. Auto-zero compensation circuit **9200** provides many of the same advantages as having a capacitor located in series in the down-converted signal path. Auto-zero compensation circuit **9200** comprises a resistor **9204**, a switch **9206**, a capacitor **9208**, a first summer **9210**, a second summer **9212**, a first voltage reference **9214**, and a second voltage reference **9216**.

Amplifier **9202** receives an input signal **9260**, and outputs an amplified input signal **9262**. Amplified input signal **9262** may comprise an unwanted DC offset voltage due to amplifier **9202**. While an ideal amplifier has zero input offset voltage (i.e., DC offset voltage referred to the input) and no offset voltage drift, most actual amplifiers have offset voltages due to a mismatch of input transistors and resistors on the monolithic circuit. This input offset voltage may drift across temperature, and hence most amplifiers are specified with an input offset voltage temperature coefficient. An amplifier may suffer from further offset voltage from input bias currents. While an ideal amplifier has zero current flowing into and out of its inputs, most actual amplifiers have non-zero input bias currents flowing into and out of their inputs. These currents can create an input voltage that resembles a DC offset voltage when they flow through resistors coupled to the amplifier inputs. Auto-zero compensation circuit **9200** removes DC offset voltages and voltage drift created by these mechanisms.

A first terminal **9226** of resistor **9204** and a first terminal **9228** of switch **9206** are coupled to amplified input signal **9262**. A second terminal **9230** of resistor **9204** and a second terminal **9232** of switch **9206** are coupled to a first terminal **9234** of capacitor **9208** and a first input terminal **9236** of second summer **9212**. A third terminal **9244** of switch **9206** is coupled to a receive mode signal **9242**. A second terminal **9238** of capacitor **9208** is coupled to first voltage reference **9214**. A second input terminal **9240** of second summer **9212** is coupled to second voltage reference **9216**. First and second voltage references **9214** and **9216** may or may not be equal to the same voltage value.

A receiver system may incorporate one or more auto-zero compensation circuits **9200** in its down-converted signal path. When such a receiver system enters a receive mode, i.e., it has entered a mode where it is ready to down-convert received signals, a receive mode signal **9242** is activated. Receive mode signal **9242** causes switch **9206** to close, and capacitor **9208** charges to the output voltage of amplifier

9202. Hence, capacitor **9208** attains, or is charged with the value of the output of amplifier **9202**, which comprises any DC offset voltage due to amplifier **9202**. Capacitor **9208** may be a relatively large value capacitor, such as **1.0-0.1**μF, but the invention is not limited to this range.

After switch **9206** is closed for a length of time sufficient to charge capacitor **9208** to the value of amplified output signal **9262**, (the output of amplifier **9202**), receive mode signal **9242** causes switch **9206** to open. When switch **9206** is open, the path from amplifier **9202** to the first terminal **9234** of capacitor **9208** is through resistor **9204**. Resistor **9204** may be a relatively large value resistor, but the invention is not limited to this example. In this configuration, capacitor **9208** relatively slowly follows the voltage of the output of amplifier **9202**. In this way, capacitor **9208** maintains the DC offset voltage value of amplifier **9202**, following any DC offset voltage drift due to changes in environmental temperature and the like.

Second summer **9212** adds the voltage stored in capacitor **9208** with the value of second voltage reference **9216**, and outputs adjusted DC offset voltage **9224**. Second voltage reference **9216** may be used to adjust or center the circuit output voltage, as described below. In alternate embodiments, second voltage reference **9216** and second summer **9212** are not present, and the first terminal **9234** of capacitor **9208** is coupled to first summer **9210**.

First summer **9210** subtracts the adjusted DC offset voltage **9224** from amplified input signal **9262**, and outputs DC offset adjusted output signal **9220** (which is received by the IF down-converter **9250** in the example of FIG. **92**A). DC Offset adjusted output signal **9220** is substantially equal to input signal **9260** amplified by amplifier **9202**, centered according to second voltage reference **9216** (if present), with the DC offset due to amplifier **9202** substantially reduced or eliminated.

FIG. **110** depicts a flowchart **11000** that illustrates operational steps corresponding to FIG. **92**B, for reducing DC offset in a signal path, according to an embodiment of the present invention. The invention is not limited to this operational description. Rather, it will be apparent to persons skilled in the relevant art(s) from the teachings herein that other operational control flows are within the scope and spirit of the present invention. In the following discussion, the steps in FIG. **110** will be described.

In step **11002**, a DC offset voltage in an input signal is stored while in a signal non-receive mode.

In step **11004**, the mode is changed to a signal receive mode.

In step **11006**, the input signal is followed relatively slowly to maintain the DC offset voltage and any DC offset voltage drift.

In step **11008**, the maintained DC offset voltage is summed with a centering voltage to form an adjusted DC offset voltage signal. A centering voltage such as second voltage reference **9216** may be used.

In step **11010**, the adjusted DC offset voltage signal is subtracted from the input signal to form a DC offset adjusted output signal.

It should be understood that the above examples are provided for illustrative purposes only. The invention is not limited to this embodiment. Alternate embodiments (including equivalents, extensions, variations, deviations, etc., of the embodiments described herein) will be apparent to persons skilled in the relevant art(s) based on the teachings contained herein. The invention is intended and adapted to include such alternate embodiments.

7.2.1.5 Reducing DC Offset With Differential Configurations

DC offset voltages due to charge injection may also be reduced or eliminated through the use of differential UFD module configurations. Furthermore, circuit re-radiation may be reduced or eliminated through the use of differential UFD module configurations. Exemplary differential UFD module circuit embodiments are described below. However, it should be understood that these examples are provided for illustrative purposes only. The invention is not limited to these embodiments. Alternate embodiments (including equivalents, extensions, variations, deviations, etc., of the embodiments described herein) will be apparent to persons skilled in the relevant art(s) based on the teachings contained herein. The invention is intended and adapted to include such alternate embodiments.

In an embodiment, two UFD modules are arranged in a differential configuration, where a first UFD module receives an actual RF signal as an input, and a second UFD module receives circuit ground, or some other circuit voltage, as an input. Furthermore, both UFD modules receive the same control signal. As a result, the two UFD modules produce substantially similar DC offset voltages due to charge injection. The UFD module output signals may be subtracted from each other, and as a result the DC offset voltage due to charge injection in the output of the first UFD module will be subtracted out.

FIG. **93** illustrates an exemplary differential DC offset voltage cancellation circuit **9300**, according to an embodiment of the present invention. Differential DC offset voltage cancellation circuit **9300** includes an optional LNA **9302**, a first UFD module **9358**, a second UFD module **9360**, a control signal generator **9310**, a dummy impedance **9312**, a second voltage reference **9314**, and a summer **9322**. In an embodiment, first UFD module **9358** comprises a first UFT module **9304**, a first voltage reference **9306**, and a first capacitor **9308**, and second UFD module **9360** comprises a second UFT module **9316**, a second capacitor **9318**, and a third voltage reference **9320**.

Optional LNA **9302** receives an input RF signal **9324** and outputs an amplified input RF signal **9326**.

Amplified input RF signal **9326** is received by a first terminal **9356** of first UFT module **9304**. A second terminal **9338** of first UFT module **9304** is coupled to a first terminal **9340** of first capacitor **9308**. First capacitor **9308** may be any type of applicable storage device. A third terminal **9342** of first UFT module **9304** receives a control signal **9328**. Control signal **9328** is generated by control signal generator **9310**. First UFT module **9304** down-converts amplified input RF signal **9326** according to control signal **9328** in a manner as described elsewhere herein. First UFT module **9304** outputs actual output signal **9330** (it is called the "actual" output signal **9330** because it is derived from input RF signal **9324**), which is stored on first capacitor **9308**. As described above, first UFT module **9304** may add unwanted DC offset voltage to actual output signal **9330**, due to charge injection effects.

A first terminal **9344** of second UFT module **9316** receives dummy input signal **9332** (it is called a "dummy" input signal **9332** because it is not a received signal, but is instead generated to address offset issues) from a first terminal **9346** of dummy impedance **9312**. A second terminal **9348** of dummy impedance **9312** is coupled to second voltage reference **9314**. Second voltage reference **9314** is a circuit voltage, preferably ground. Impedance **9312** approximates for second UFT module **9316** the input impedance presented to the input of first UFT module **9304** (that is,

impedance **9312** is substantially equal to the input impedance of first UFT module **9304**). Impedance **9312** is implemented using any well known combination of circuit elements. A second terminal **9350** of second UFT module **9316** is coupled to a first terminal **9352** of second capacitor **9318**. A third terminal **9354** of second UFT module **9316** receives control signal **9328**. Second UFT module **9316** down-converts dummy input signal **9332** according to control signal **9328** in a similar fashion as described above. Second UFT module **9316** outputs dummy output signal **9334**, which is stored on second capacitor **9318**. Dummy output signal **9334** comprises unwanted DC offset voltage due to charge injection effects in second UFT module **931.6**, similar to that generated by first UFT module **9304**. The DC offset voltages due to charge injection on actual output signal **9330** and dummy output signal **9334** are substantially similar due to the similar UFT module configurations.

Summer **9322** subtracts dummy output signal **9334** from actual output signal **9330**, and outputs output signal **9336**. Output signal **9336** is a down-converted version of input RF signal **9324**, with DC offset due to charge injection in UFT module **9304** substantially reduced or eliminated by subtracting out the DC offset similarly created in UFT module **9316**.

Preferably, the noise entering on first terminals **9356** and **9344** of UFT modules **9304** and **9316** is matched. If the frequency spectrum of the noise entering first UFT module **9304** on input RF signal **9324** is different than the noise entering second UFT module **9316** from second voltage reference **9314**, the difference may show up on output signal **9336**. One example of where the noise spectrums may be different is when there is a filter on input RF signal **9324** prior to first UFT module **9304**, which filters out some noise frequencies. This difference may be solved, for example, by placing a similar filter at the input of second UFT module **9316**.

FIG. **111** depicts a flowchart **11100** that illustrates operational steps, corresponding to the structure of FIG. **93**, for down-converting an input signal and canceling DC offset voltages, according to an embodiment of the present invention. The invention is not limited to this operational description. Rather, it will be apparent to persons skilled in the relevant art(s) from the teachings herein that other operational control flows are within the scope and spirit of the present invention. In the following discussion, the steps in FIG. **111** will be described.

In step **11102**, an input signal is received.

In step **11104**, the input signal is frequency down-converted with a first universal frequency down-conversion module to an actual down-converted signal.

In step **11106**, a dummy input signal is received. In an embodiment, a dummy impedance is matched with the input impedance of an input of the first universal frequency down-conversion module. The matched dummy impedance is coupled to an input of the second universal frequency down-conversion module to form the dummy input signal.

In step **11108**, the dummy signal is frequency down-converted with a second universal frequency down-conversion module to a dummy down-converted signal.

In step **11110**, the dummy down-converted signal is subtracted from the actual down-converted signal to form an output signal. DC offset voltages due to said first and said second universal frequency down-conversion modules are canceled by the subtraction of step **11110**, as further described above.

FIG. **94**A illustrates a second exemplary differential DC offset voltage cancellation circuit **9400**, according to an embodiment of the present invention. Differential DC offset voltage cancellation circuit **9400** is effective at reducing or eliminating DC offset voltages due to charge injection and at reducing or eliminating circuit re-radiation. Differential DC offset voltage cancellation circuit **9400** comprises a buffer/inverter **9402**, a first UFD module **9434**, a second UFD module **9436**, a control signal generator **9410**, and a summer **9422**. In an embodiment, first UFD module **9434** comprises a first UFT module **9404**, a first voltage reference **9406**, and a first capacitor **9408**, and second UFD module **9436** comprises a second UFT module **9416**, a second capacitor **9418**, and a second voltage reference **9420**.

FIG. **94**B illustrates example waveforms related to differential DC offset voltage cancellation circuit **9400** of FIG. **94**A, according to an embodiment of the present invention.

Buffer/inverter **9402** receives an input RF signal **9424**. FIG. **94**B shows an example waveform for input RF signal **9424**. Buffer/inverter **9402** outputs a non-inverted amplified input RF signal **9412** and an inverted amplified input RF signal **9414**. Buffer/inverter **9402** may comprise any circuit component or equivalent that receives a single-ended signal and outputs a differential signal, such as a differential driver. Non-inverted amplified input RF signal **9412** and inverted amplified input RF signal **9414** are substantially similar signals, but inverted images of each other. FIGS. **94**C and **94**D show example waveforms for non-inverted amplified input RF signal **9412** and inverted amplified input RF signal **9414**, respectively. In the example of FIGS. **94**C and **94**D, buffer/inverter **9402** has a gain of **2**, and therefore the amplitudes of non-inverted amplified input RF signal **9412** (FIG. **94**C) and inverted amplified input RF signal **9414** (FIG. **94**D) are two times greater than that of input RF signal **9424** (FIG. **94**B).

First and second UFT modules **9404** and **9416** operate similarly to first and second UFT modules **9304** and **9316** of FIG. **93**. First UFT module **9404** receives non-inverted amplified input RF signal **9412**. First UFT module **9404** operates to down-convert non-inverted amplified input RF signal **9412** according to a control signal **9428**, which is output by control signal generator **9410**. FIG. **94**E shows an example waveform for control signal **9428**. First UFT module **9404** outputs a non-inverted output signal **9430**. Non-inverted output signal **9430** comprises DC offset voltage due to charge injection effects in first UFT module **9404**, as described above. FIG. **94**F shows an example waveform for non-inverted output signal **9430**. In this example, amplified input RF signal **9412** is down-converted to non-inverted output signal **9430** at a value of 0.4 Volts, with a DC offset voltage of 0.1 Volts added, resulting in a total of 0.5 Volts.

Second UFT module **9416** receives inverted amplified input RF signal **9414**. Second UFT module **9416** down-converts inverted amplified input RF signal **9414** according to control signal **9428**, and outputs inverted output signal **9432**. Inverted output signal **9432** comprises DC offset voltage due to charge injection in second UFT module **9416**. FIG. **94**G shows an example waveform for inverted output signal **9432**. Due at least in part to the similarity in the layouts and circuit configurations of first and second UFT modules **9404** and **9416**, their resulting DC offset voltages due to charge injection will be substantially similar, and of the same polarity. In the example of FIG. **94**G, inverted amplified input RF signal **9414** is down-converted to inverted output signal **9432** at a value of −0.4 Volts, with a DC offset voltage of 0.1 Volts added, resulting in a total of −0.3 Volts. As shown in FIGS. **94**F and **94**G, the polarities of non-inverted output signal **9430** and inverted output signal **9432** are opposite. The DC offset voltages added

respectively to these signals by first UFT module **9404** and second UFT module **9416** are equal at 0.1 Volts.

Summer **9422** subtracts inverted output signal **9432** from non-inverted output signal **9430**, and outputs an output signal **9426**. FIG. **94**H shows an example waveform for output signal **9426**. Because non-inverted output signal **9430** and inverted output signal **9432** comprise the same down-converted signal, but of opposite polarities, when subtracted by summer **9422**, the respective down-converted signals will add. Because the DC offset voltages in non-inverted output signal **9430** and inverted output signal **9432** are of the same polarity and of substantially the same amplitude, when they are subtracted by summer **9422** the DC offset voltages will substantially cancel. As a result, any DC offset voltage in output signal **9426** will be substantially reduced or eliminated. As shown in the example of FIGS. **94**F–**94**H, the amplitudes of non-inverted output signal **9430** and inverted output signal **9432** combine in summer **9422** to equal 0.8 Volts, while the DC offset voltages of 0.1 Volts cancel each other. Thus, the embodiment of FIG. **94**A both enhances signal amplitude and addresses DC offset issues.

Additionally, re-radiation may be substantially reduced or eliminated due to this configuration. Control signal noise produced in first and second UFT modules **9404** and **9416** due to pulses on control signal **9428** may travel back through buffer/inverter **9402**. If first and second UFT modules **9404** and **9416** are configured in a substantially similar fashion and receive the same control signal, they will produce substantially equivalent control signal noise. Because the control signal noise from second UFT module **9416** will be inverted by buffer/inverter **9402** when passing back through buffer/inverter **9402**, it will cancel when combined with the non-inverted control signal noise from first UFT module **9404** passing back through buffer/inverter **9402**. Furthermore, the noise matching concerns of the prior differential circuit embodiment of FIG. **93** are not present in this embodiment.

FIG. **112** depicts a flowchart **11200** that illustrates operational steps, corresponding to the structure of FIG. **94**A, for down-converting an input signal and canceling DC offset voltages, according to an embodiment of the present invention. The invention is not limited to this operational description. Rather, it will be apparent to persons skilled in the relevant art(s) from the teachings herein that other operational control flows are within the scope and spirit of the present invention. In the following discussion, the steps in FIG. **112** will be described.

In step **11202**, an input signal is received.

In step **11204**, the received input signal is amplified to a non-inverted output signal and an inverted output signal.

In step **11206**, the non-inverted output signal is down-converted with a first universal frequency down-conversion module to a non-inverted down-converted signal.

In step **11208**, the inverted output signal is down-converted with a second universal frequency down-conversion module to an inverted down-converted signal.

In step **11210**, the inverted down-converted signal is subtracted from the non-inverted down-converted signal to form an output signal. DC offset voltages in the non-inverted down-converted signal and the inverted down-converted signal produced by the first and second universal frequency down-conversion modules, respectively, are canceled.

In step **11212**, the first universal frequency down-conversion module and the second universal frequency down-conversion module are configured to generate substantially equal DC offset voltages given the same input signal.

It should be understood that the above examples are provided for illustrative purposes only. The invention is not limited to these embodiments. Alternate embodiments (including equivalents, extensions, variations, deviations, etc., of the embodiments described herein) will be apparent to persons skilled in the relevant art(s) based on the teachings contained herein. The invention is intended and adapted to include such alternate embodiments.

7.2.1.6 Reducing DC Offset With Differential Outputs

Unwanted DC offset voltages may be reduced or canceled through the use of differential receiver circuit outputs. FIG. **95** illustrates an exemplary differential receiver circuit **9500**, according to an embodiment of the present invention. Differential receiver circuit **9500** comprises a first impedance match **9502**, a second impedance match **9504**, a tank circuit **9506**, a differential UFD module **9508**, a control signal generator **9510**, and a resistor **9512**.

First and second impedance match **9502** and **9504** are optional, the necessity of which being determined on an application-by-application basis. In a preferred embodiment, first impedance match **9502** is a first inductor **9514**. In a preferred embodiment, second impedance match **9504** is a second inductor **9516**. However, other impedance match circuits may be used.

Tank circuit **9506** is optional, the necessity of which being determined on an application-by-application basis. In a preferred embodiment, tank circuit **9506** comprises a first capacitor **9518** and a third inductor **9520**, although other circuits may be used.

In a preferred embodiment, differential UFD module **9508** comprises a first UFT module **9522**, a second UFT module **9524**, and a storage module **9534**. In a preferred embodiment, storage module **9534** comprises a second capacitor **9526**.

A positive or "plus" signal input of a differential RF input signal **9528** is input through first impedance match **9502** to a first terminal **9536** of tank circuit **9506**. A negative or "minus" signal input of differential RF input signal **9528** is input through second impedance match **9504** to a second terminal **9538** of tank circuit **9506**.

First UFT module **9522** is coupled to first terminal **9536** of tank circuit **9506**, and receives the "plus" signal input of differential RF input signal **9528**. Second UFT module **9524** is coupled to second terminal **9538** of tank circuit **9506**, and receives the "minus" signal input of differential RF input signal **9528**.

First and second UFT modules **9522** and **9524** down-convert differential RF input signal **9528** according to a control signal **9532**, which is output by control signal generator **9510**, in a manner as described elsewhere herein. The outputs of first and second UFT modules **9522** and **9524** are stored in storage module **9534**, and output as differential output signal **9530**.

First UFT module **9522** outputs a "plus" output of differential output signal **9530**. Second UFT module **9524** outputs a "minus" output of differential output signal **9530**. Differential output signal **9530** is equal to the difference voltage between these "plus" and "minus" outputs.

A first terminal **9540** of storage module **9534** is coupled to the "plus" output of differential output signal **9530**. A second terminal **9542** of storage module **9534** is coupled to the "minus" output of differential output signal **9530**.

Resistor **9512** is optional, the necessity of which being determined on an application-by-application basis. Resistor **9512**, when present, operates as a load resistance, the value of which may be determined on an application-by-application basis. A first terminal **9544** of resistor **9512** is

coupled to the "plus" output of differential output signal **9530**. A second terminal **9546** of resistor **9512** is coupled to the "minus" output of differential output signal **9530**.

Due to their similar layout and circuit configuration, and due to control signal **9532**, first UFT module **9522** and second UFT module **9524** each generate substantially equal DC offset voltages due to charge injection effects. The DC offset voltage generated by first UFT module **9522** is applied to first terminal **9540** of storage module **9534**. The DC offset voltage generated by second UFT module **9524** is applied to second terminal **9542** of storage module **9534**. Because differential output signal **9532** is measured across storage module **9534**, the DC offset voltages due to first and second UFT module **9522** and **9524** substantially cancel each other out.

FIG. **113** depicts a flowchart **11300** that illustrates operational steps, corresponding to the structure of FIG. **95**, for differentially down-converting an input signal, according to an embodiment of the present invention. The invention is not limited to this operational description. Rather, it will be apparent to persons skilled in the relevant art(s) from the teachings herein that other operational control flows are within the scope and spirit of the present invention. In the following discussion, the steps in FIG. **113** will be described.

In step **11302**, an input signal is differentially received. For example, a positive node input signal and a negative node input signal are received.

In step **11304**, the differentially received input signal is down-converted with a differential universal frequency down-conversion module to a differential down-converted signal. The differential down-converted signal comprises a positive node down-converted signal and a negative node down-converted signal. In an embodiment, the differential universal frequency down-conversion module comprises a positive node switch (UFT) module and a negative node switch (UFT) module. The positive node switch module and the negative node switch module are configured to generate substantially equal DC offset voltages in the positive node down-converted signal and the negative node down-converted signal, respectively, as described above.

In step **11306**, the differential down-converted signal is measured between the positive node down-converted signal and the negative node down-converted signal. The DC offset voltages in the positive node down-converted signal and the negative node down-converted signal substantially cancel, as described above.

Further differential circuit configurations for canceling DC offset voltages will be apparent to persons skilled in the relevant art(s) from the teaching herein. Exemplary differential receiver circuit output embodiments are described above. However, it should be understood that these examples are provided for illustrative purposes only. The invention is not limited to these embodiments. Alternate embodiments (including equivalents, extensions, variations, deviations, etc., of the embodiments described herein) will be apparent to persons skilled in the relevant art(s) based on the teachings contained herein. The invention is intended and adapted to include such alternate embodiments.

7.2.2 Re-radiation

Re-radiation, as described above, is an undesirable phenomenon where a signal comprising one or more frequency components generated by receiving circuitry is transmitted by an antenna. FIG. **44**A illustrates an antenna **4406** that transmits circuit re-radiation signals **4414** and **4420**. Receiving circuitry, for example shown as a receiver **4402** and a local oscillator **4404**, related to antenna **4406** may produce the transmitted frequency components. For example, the frequency components may be generated in part by local oscillator **4404**. These generated frequency components may travel along re-radiation path **4418**, where they are transmitted by antenna **4406** as re-radiation signals **4414** and **4420**. When transmitted, these frequency components may undesirably interfere with one or more nearby receivers, such as nearby receiver **4408**. An antenna **4420** may receive re-radiation signal **4420**, which is down-converted by nearby receiver **4408**. One or more of the frequency components of received re-radiation signal **4420** may fall within a frequency range of interest of nearby receiver **4408**, interfering with the quality of the signals intended to be down-converted by nearby receiver **4408**.

As described above, re-radiation may be undesirably received back by the same antenna that transmitted the re-radiation. As shown in FIG. **44**A, receiver **4402** may transmit re-radiation signal **4414**, which is subsequently reflected by an object **4412** as reflected re-radiation **4416**, which is then received by antenna **4406**. This is referred to as re-radiation recapture. If frequency components are received back by the same antenna that transmitted them, they may be down-converted, may further impair signals that are down-converted, and/or may cause undesirable DC offset voltages that may impair the down-converted signals. FIG. **44**B shows an example local oscillator signal **4422**, of a frequency of f. If a signal such as local oscillator signal **4422** is re-radiated, and subsequently received by the circuit that transmitted it, it may combine with itself to create an undesired DC offset voltage. FIG. **44**C shows the Fourier transform of local oscillator signal **4422**, with spectral components **4424** and **4426** at frequencies +f and −f. FIG. **44**D shows a result of the convolution of local oscillator signal **4422** with itself, producing a DC spectral component **4432** representing an undesired DC offset voltage. FIG. **44**D shows resulting spectral components **4428** and **4430** at frequencies +2f and −2f, and DC spectral component **4432** at a frequency of zero. DC spectral component **4432** may cause the same problems as DC offset voltages created by other mechanisms, such as those described elsewhere herein.

For at least these reasons, it is desirable to reduce or eliminate circuit re-radiation. Exemplary embodiments are provided below for reducing or eliminating circuit re-radiation. The embodiments provided below are not limited to this use, but may have additional applications. For example, these embodiments may be applicable to reducing or eliminating unwanted DC offset voltages.

7.2.2.1 Reducing Re-radiation by Adjusting Control Signal Attributes

In the present invention, a local oscillator may be used to generate a control signal used to down-convert received RF signals. The control signal may comprise frequency components related to the local oscillator frequency and its harmonics. As described above, one or more frequency components of the local oscillator signal may leak from a nearby antenna as circuit re-radiation. As a result, attributes of circuit re-radiation are directly related to attributes of control signal frequency components. Hence, re-radiation potentially may be reduced or eliminated by adjusting one or more attributes of the control signal frequency components. Control signal attributes that may be adjusted at least include control pulses width, control pulse amplitude, and/or control pulse phase.

FIG. **96** shows an exemplary input RF signal **9602**. A π-pulse length control signal **9604** is also shown that may be applied to a UFD module to down-convert input RF signal **9602**. As shown, π-pulse length control signal **9604** comprises pulses that are of a length of π radians. In a receiver

embodiment implementing a UFD module, a control signal such as π-pulse length control signal **9604** may be re-radiated from the receiver. In the time domain, the re-radiation may appear as noise pulses that are shaped similarly to pulses of the control signal. In certain situations, one or more of the frequencies of the re-radiated signal may undesirably fall within the output frequency bands of interest of the system implementing the receiver circuit. For instance, when down-converting a signal directly to baseband, a control signal frequency may be substantially equal to the frequency of the received RF carrier signal. If this control signal frequency is re-radiated, and then subsequently received and down-converted, it may result in one or more down-converted signal frequencies near or equal to DC, or at baseband, in a similar fashion to that described in FIGS. **44**B–D above. It would be beneficial if the re-radiated signal components within the frequency bands of interest could be eliminated or moved.

In an exemplary embodiment for changing the frequency content of the re-radiated signal, the pulse width of the control pulses of the control signal may be lengthened. As shown in FIG. **96**, a 3π-pulse length control signal **9606** has control pulses of a length of 3π. Because the control pulse width of 3π-pulse length control signal **9606** is wider than that of π-pulse length control signal **9604**, 3π-pulse length control signal **9606** is made up of lower frequency components. It is well known that signals comprising substantially square or rectangular pulses include a plurality of signals of various frequencies that add together to form the pulse shapes. As pulses become wider, the frequencies of the signals required to form them tend to become lower. Because 3π-pulse length control signal **9606** has wider pulses, and therefore contains lower frequency components, a re-radiated signal due to 3π-pulse length control signal **9606** will have lower frequency components. Even if the lower frequency components are re-radiated, and then received and down-converted, the down-converted components should be out-of-band. In an embodiment, a 3π-pulse length control signal **9606** configuration re-radiated at a 19 dB lower level than that of a π-pulse length control signal **9604**.

Frequency components of potential re-radiation can be lowered more by further widening the control pulses. For example, FIG. **96** shows a 5π-pulse length control signal **9608** with control signal pulses of a width of 5π. 5π-pulse length control signal **9608** includes pulses wider than those of 3π-pulse length control signal **9606**. Because of this, as described above, 5π-pulse length control signal **9608** is made up of lower frequency signal components relative to 3π-pulse length control signal **9606**. Hence, relative to 3π-pulse length control signal **9606**, circuit re-radiation related to 5π-pulse length control signal **9608** is of lower frequency.

A pulse width can be widened even more as would be understood by persons skilled in the relevant arts from the teachings herein. To what degree the pulse width may be widened will be determined on an application by application basis. The pulse width may be varied by whole increments of π, or any fraction thereof. It should be understood that the above pulse width examples are provided for illustrative purposes only. The invention is not limited to these embodiments. Alternate embodiments (including equivalents, extensions, variations, deviations, etc., of the embodiments described herein) will be apparent to persons skilled in the relevant art(s) based on the teachings contained herein. The invention is intended and adapted to include such alternate embodiments.

FIG. **114** depicts a flowchart **11400** that illustrates operational steps for down-converting an input signal with a variety of control signal pulse widths, according to an embodiment of the present invention. The invention is not limited to this operational description. Rather, it will be apparent to persons skilled in the relevant art(s) from the teachings herein that other operational control flows are within the scope and spirit of the present invention. In the following discussion, the steps in FIG. **114** will be described.

In step **11402**, an input signal is frequency down-converted with a universal frequency down-conversion module to a down-converted signal. The input signal is down-converted according to a control signal comprising a train of pulses having pulse widths.

In step **11404**, a signal related to the control signal is re-radiated.

In step **11406**, the pulse widths are increased to decrease a frequency of the re-radiated signal. In an embodiment, the pulse widths may be selected according to the equation: pulse width=**180+360**·n degrees of a frequency of said input signal, wherein n is any integer ≧zero. As n is increased, a frequency of the re-radiated signal is decreased.

7.2.2.1.1 I/Q Modulation Receiver Control Signal Considerations and Embodiments

Design considerations exist for I/Q modulation receiver circuits in regard to control signals. The embodiments provided above for changing control signal pulse widths are applicable to I/Q modulation receiver circuits. However, when modifying control signal pulse widths in regards to I/Q modulation receiver circuits to overcome problems with re-radiation as described above, or other problems, certain design constraints may need to be considered. For instance, in some embodiments, such as described below, pulses of the I-phase control signal and pulses of the Q-phase control signal may not overlap, and must be configured such that they do not overlap to fulfill this requirement. In alternate embodiments, such as described below, an I/Q modulation receiver circuit may be configured such that I-phase and Q-phase control signals may overlap. Exemplary embodiments are provided below for overcoming at least some design constraints related to control signal pulses for I/Q modulation receiver circuits, according to the present invention.

It should be understood that the following I/Q modulation receiver examples are provided for illustrative purposes only. The invention is not limited to these embodiments. Alternate embodiments (including equivalents, extensions, variations, deviations, etc., of the embodiments described herein) will be apparent to persons skilled in the relevant art(s) based on the teachings contained herein. The invention is intended and adapted to include such alternate embodiments.

7.2.2.1.1 Non-overlapping I/Q Control Signal Pulses Embodiments

FIG. **97** illustrates an exemplary I/Q modulation receiver circuit **9700**, according to an embodiment of the present invention. I/Q modulation receiver circuit **9700** comprises a first UFD module **9702**, a second UFD module **9704**, a control signal generator **9706**, and a phase shifter **9708**. I/Q modulation circuit **9700** may use a variety of control signal configurations to down-convert I/Q modulated signals.

An input RF I/Q signal **9722** is received by first UFD module **9702**. First UFD module **9702** down-converts the I-phase signal portion of input RF I/Q signal **9722** according to a control signal **9728**, which is output by control signal generator **9706**. First UFD module **9702** outputs an I output signal **9724**.

In an embodiment, first UFD module **9702** comprises a first UFT module **9710**, a first storage module **9712**, and a first voltage reference **9714**.

Control signal **9728** is received by phase shifter **9708**. In an I/Q modulation embodiment, phase shifter **9708** preferably shifts the phase of control signal **9728** by 90 degrees, although other phase shifts are possible. Phase shifter **9708** outputs phase-shifted control signal **9730**.

Input RF I/Q signal **9722** is received by second UFD module **9704**. Second UFD module **9704** down-converts the Q-phase signal portion of input RF I/Q signal **9722** according to phase-shifted control signal **9730**. Second UFD module **9704** outputs a Q output signal **9726**.

In an embodiment, second UFD module **9704** comprises a second UFT module **9716**, a second storage module **9718**, and a second voltage reference **9720**. First and second voltage references **9714** and **9720** may or may not be equal to the same voltage value.

FIGS. **98A–98I** shows an exemplary input RF I/Q signal **9722**, and several exemplary control signal waveforms, which may be used to down-convert input RF I/Q signal **9722**.

For example, an I-control signal **9802** is shown in FIG. **98**B. I-control signal **9802** may be used to down-convert an I-phase signal portion of input RF I/Q signal **9722**. A corresponding Q-control signal **9804** is shown in FIG. **98**C. Q-control signal **9804** is output by phase shifter **9708**. Q-control signal **9804** is shifted by 90 degrees from I-control signal **9802**. Q-control signal **9804** may be used to down-convert a Q-phase signal portion of input RF I/Q signal **9722**.

As illustrated in FIGS. **98**B and **98**C, pulses of I-control signal **9802** overlap the corresponding phase-shifted pulses of Q-control signal **9804**. In some embodiments where first and second UFT modules **9710** and **9716** comprises switches, overlapping pulses of I-control signal **9802** and Q-control signal **9804** will cause the switches in first and second UFT modules **9710** and **9716** to be simultaneously closed during a period pulse of overlap. Due to the overlap, first and second UFD modules **9702** and **9704** may not be able to properly down-convert the I- and Q-phase components of input RF I/Q signal **9722**. This is because during the period that switches inside the first and second UFD modules **9702** and **9704** are both closed, the switches will be attempting to transfer energy from input RF I/Q signal **9722** simultaneously. This may lead to non-negligible distortion of input RF I/Q signal **9722** in some embodiments. Hence, less than desirable input signal down-conversion accuracy may result.

In an another example, FIGS. **98**D and **98**E show a 3π I-control signal **9806** and a 3π Q-control signal **9808**. Pulses of 3π I-control signal **9806** and 3π Q-control signal **9808** overlap. Using these control signals, in some embodiments first and second UFD modules **9702** and **9704** may not be able to properly down-convert the I- and Q-phase components of input RF I/Q signal **9722**.

The overlap problem may be overcome by creating control signals with non-overlapping pulses. For example, FIGS. **98**F and **98**G show a non-overlapping I-control signal **9810** and a non-overlapping Q-control signal **9812**. Pulses on non-overlapping I-control signal **9810** are separated by 720 degrees, and may be used to down-convert the I-phase signal component of input RF I/Q signal **9722**. Pulses on non-overlapping Q-control signal **9812** are phased-shifted from pulses on non-overlapping I-control signal **9810** by 270 degrees, are separated from each other by 720 degrees, and may be used to down-convert the Q-phase signal component of input RF I/Q signal **9722**.

In a further example, FIGS. **98**H and **981** show a non-overlapping I-control signal **9814** and a non-overlapping Q-control signal **9816**. Pulses on non-overlapping I-control signal **9814** are separated by 540 degrees, and may be used to down-convert the I-phase signal component of input RF I/Q signal **9722**. (Note that when pulses on non-overlapping I-control signal **9814** are separated by 180 degrees, 540 degrees, 900 degrees, etc., the information down-converted on consecutive pulses may be inverted relative to one another, and hence an inverter may be required to correct for this.) Pulses on non-overlapping Q-control signal **9816** are phased-shifted from pulses on non-overlapping I-control signal **9814** by 270 degrees, are separated from each other by 540 degrees, and may be used to down-convert the Q-phase signal component of input RF I/Q signal **9722**. (Note that when pulses on non-overlapping Q-control signal **9816** are separated by 180 degrees, 540 degrees, 900 degrees, etc., the information down-converted on consecutive pulses may be inverted relative to one another, and hence an inverter may be required to correct for this.)

Further control signal waveform configurations exist for implementing non-overlapping pulses, according to embodiments of the present invention, as would be recognized by persons skilled in the relevant art(s) from the teachings herein. I- and Q-control signal pulses may be widened, or made more narrow. I- and Q-control signal pulses may be made to occur further apart or closer together. A Q-control signal may be phase-shifted from a corresponding I-control signal by 90 degrees, 270 degrees, 450 degrees, 630 degrees, and so on, such that the I-control signal is matched with the I-phase input RF signal component, and the Q-control signal is matched with the Q-phase input RF signal component. Pulses on an I-phase control signal may be shifted from each other by any multiple of 180 (with one or more inverters possibly required, as described above) or 360 degrees. I- and Q-control signals may be formed to these requirements for use in I/Q modulation receiver circuit **9700** of FIG. **97**, as long as their pulses do not overlap.

FIG. **115** depicts a flowchart **11500** that illustrates operational steps corresponding to the structure of FIG. **97**, for down-converting an RF I/Q modulated input signal, according to an embodiment of the present invention. The invention is not limited to this operational description. Rather, it will be apparent to persons skilled in the relevant art(s) from the teachings herein that other operational control flows are within the scope and spirit of the present invention. In the following discussion, the steps in FIG. **115** will be described.

In step **11502**, an input RF I/Q modulated signal is frequency down-converted with a first universal frequency down-conversion module according to a control signal. The input signal is down-converted to an in-phase information signal. The control signal comprises a train of pulses. In an embodiment, the train of pulses are generated to have apertures approximately equal to 180+360·n degrees of a frequency of said input RF I/Q modulated signal, wherein n is any integer greater than or equal to 0.

In step **11504**, the control signal is phase-shifted. In embodiments, the control signal is phase-shifted by 90 degrees of a frequency of said input RF I/Q modulated signal. In alternative embodiments, the control signal may be shifted by 90+m·180 degrees, wherein m is any integer greater than or equal to 1. In embodiments, the control signal may be phase shifted such that pulses on the control signal do not overlap pulses on the phase-shifted control signal.

In step **11506**, the input RF I/Q modulated signal is frequency down-converted with a second universal frequency down-conversion module according to the phase-

shifted control signal. The input signal is down-converted to a quadrature-phase information signal.

7.2.2.1.1.2 Buffered. I/Q Modulation Receiver Embodiment

Exemplary embodiments are provide below for I/Q modulation receiver circuits where control signal pulses may overlap. Such embodiments may provide advantages where it is desirable to modify control signal pulse attributes as described above to solve problems with circuit re-radiation, and other problems. Additional and alternate embodiments will be recognized by persons skilled in the relevant art(s) from the teachings herein, and are within the scope of the present invention.

FIG. **99** illustrates an exemplary buffered I/Q modulation receiver circuit **9900**, according to an embodiment of the present invention. Buffered I/Q modulation receiver circuit **9900** allows for overlapping I- and Q-control signal pulses such as I-control signal **9802** and Q-control signal **9804** of FIG. **98**.

Buffered I/Q modulation receiver circuit **9900** comprises an optional splitter **9902**, a first low noise amplifier (LNA) **9904**, a second LNA **9908**, a control signal generator **9910**, a first UFD module **9912**, a second UFD module **9914**, and a phase shifter **9916**. Buffered I/Q modulation receiver circuit **9900** is configured substantially similar to, and operates in a similar fashion to I/Q modulation receiver circuit **9700** of FIG. **97**, with the addition of optional splitter **9902**, first LNA **9904**, and second LNA **9908**.

Optional splitter **9902** optionally splits an input RF I/Q signal **9930**, and outputs a first split input RF I/Q signal **9944** to first LNA **9904**, and a second split input RF I/Q signal **9946** to second LNA **9908**.

First LNA **9904** buffers and optionally amplifies first split input RF I/Q signal **9944**, and outputs a first buffered input RF I/Q signal **9936**.

Second LNA **9908** buffers and optionally amplifies second split input RF I/Q signal **9946**, and outputs a second buffered input RF I/Q signal **9938**.

First UFD module **9912** receives first buffered input RF I/Q signal **9936**. First UFD module **9912** down-converts first buffered input RF I/Q signal **9936** according to a control signal **9940**, which is output by control signal generator **9910**. First UFD module **9912** outputs I output signal **9932**. In an embodiment, first UFD module **9912** comprises a first UFT module **9918**, a first storage module **9920**, and a first voltage reference **9922**.

Phase shifter **9916** receives control signal **9940**, and outputs a phase-shifted control signal **9942**. Phase-shifted control signal **9942** is preferably shifted by 90 degrees from control signal **9940**, but may also be shifted by 270 degrees, 450 degrees, 630 degrees, and so on.

Second UFD module **9914** receives second buffered input RF I/Q signal **9938**. Second UFD module **9914** down-converts second buffered input RF I/Q signal **9938** according to phase-shifted control signal **9942**. Second UFD module **9914** outputs Q output signal **9934**. In an embodiment, second UFD module **9914** comprises a second UFT module **9924**, a second storage module **9926**, and a second voltage reference **9928**.

As described elsewhere herein, when first UFT module **9918** transfers energy from first buffered input RF I/Q signal **9936**, first buffered input RF I/Q signal **9936** will be distorted to some degree. Likewise, when second UFT module **9924** transfers energy from second buffered input RF I/Q signal **9938**, second buffered input RF I/Q signal **9938** will be distorted to some degree. First and second LNA **9904** and **9908** buffer the input RF I/Q signals entering first and second UFD modules **9912** and **9914** from input RF I/Q signal **9930**. Hence, input RF I/Q signal **9930** will not be substantially distorted by energy transfer occurring in either of first and second UFD module **9912** and **9914**. Because of this, the I- and Q-control signals used to cause first and second UFD modules **9912** and **9914** to down-convert their respective input RF I/Q signals may have overlapping I- and Q-pulses. Hence, for example, control signal **9940** may appear as I-control signal **9802** of FIG. **98**, and phase-shifted control signal **9942** may appear as Q-control signal **9804**, phase-shifted by 90 degrees from, and having pulses overlapping with, control signal **9940**. It is noted that the invention is not limited to the example of FIG. **99**. Other components to buffer or isolate first and second UFT modules **9918**,**9924** from each other could alternatively be used.

FIG. **116** depicts a flowchart **11600** that illustrates operational steps corresponding to the structure of FIG. **99**, for down-converting an RF I/Q modulated input signal, according to an embodiment of the present invention. The invention is not limited to this operational description. Rather, it will be apparent to persons skilled in the relevant art(s) from the teachings herein that other operational control flows are within the scope and spirit of the present invention. In the following discussion, the steps in FIG. **116** will be described.

In step **11602**, an input RF I/Q modulated signal is buffered with a first low noise amplifier and a second low noise amplifier. In an alternative embodiment, instead of or in addition to buffering the input RF I/Q modulated signal as just described, the input RF I/Q modulated signal may be split into a first split RF I/Q modulated signal and a second split RF I/Q modulated signal.

In step **11604**, the first buffered (and/or first split) RF I/Q modulated signal is frequency down-converted with a first universal frequency down-conversion module according to a control signal. The input signal is down-converted to an in-phase information signal. The control signal comprises a train of pulses. In an embodiment, the train of pulses are generated to have apertures approximately equal to $180+360 \cdot n$ degrees of a frequency of said input RF I/Q modulated signal, wherein n is any integer greater than or equal to 0.

In step **11606**, the control signal is phase-shifted. In embodiments, the control signal is phase-shifted by $90+m \cdot 180$ degrees of a frequency of said input RF I/Q modulated signal, wherein m is any integer greater than or equal to 0. In embodiments, the control signal may be phase shifted such that pulses on the control signal overlap pulses on the phase-shifted control signal.

In step **11608**, the second buffered (and/or second split) RF I/Q modulated signal is frequency down-converted with a second universal frequency down-conversion module according to the phase-shifted control signal. The input signal is down-converted to a quadrature-phase information signal.

7.2.2.2 Reducing Re-radiation with Placebo Down-conversion Modules

FIG. **100** illustrates an exemplary receiver **10000** with placebo circuit **10004**, according to an embodiment of the present invention. Receiver **10000** with placebo circuit **10004** reduces or frequency shifts potentially re-radiated control signal components such that their potentially adverse impact on a down-converted signal is reduced. The potentially re-radiated control signal components may be shifted out of the frequency bands of interest, such that they will have a reduced adverse impact on the down-converted signal.

Control signal frequency components may be adjusted or shifted through the use of one or more UFT modules, called

"placebo" UFT modules, and one or more corresponding "placebo" control signals. In a placebo embodiment, an "actual" UFT module receives and down-converts a received RF input signal with an "actual" control signal as described elsewhere herein. Furthermore, a placebo UFT module receives a placebo control signal, and may also down-convert the received RF input signal, to output a down-converted signal. The actual control signal and one or more placebo control signals may cause circuit re-radiation. This resulting circuit re-radiation will be related to a combination of the actual control signal waveform and the one or more placebo control signal waveforms. Hence, attributes of the resulting circuit re-radiation may be manipulated by using various placebo control signal waveforms, to cause overall circuit re-radiation to be less harmful to circuit performance. Characteristics of a particular placebo control signal waveform may be determined on an application-by-application basis. The term "placebo" is used because the signal down-converted by the placebo circuitry is not necessarily used by subsequent signal processing hardware and software, but may actually remain unutilized. The signal down-converted by the "actual" circuitry is used by subsequent signal processing.

Receiver **10000** with placebo circuit **10004** comprises an actual UFD module **10002**, a placebo UFD module **10004**, a control signal generator **10006**, and a phase shifter **10008**.

Actual UFD module **10002** receives an input RF signal **10022**. Actual UFD module **10002** down-converts actual input RF signal **10022** according to a control signal **10028**, which is output by control signal generator **10006**, in a manner as described elsewhere herein. Actual UFD module **10002** outputs an actual output signal **10024**. In an embodiment, actual UFD module **10002** comprises an actual UFT module **10010**, an actual storage module **10012**, and an actual voltage reference **10014**.

Phase shifter **10008** receives control signal **10028**, and outputs a phase-shifted placebo control signal **10030**. Phase-shifted placebo control signal **10030** is preferably shifted such that pulses on phase-shifted placebo control signal **10030** do not overlap with pulses on control signal **10028**. In other embodiments, pulses on phase-shifted placebo control signal **10030** may overlap pulses on control signal **10028**, as would be understood by persons skilled in the relevant art(s) from the teachings herein.

Placebo UFD module **10004** receives input RF signal **10022**. Placebo UFD module **10004** down-converts input RF signal **10022** according to phase-shifted placebo control signal **10030**. Placebo UFD module **10004** outputs placebo output signal **10026**. In an embodiment, placebo UFD module **10004** comprises a placebo UFT module **10016**, a placebo storage module **10018**, and a placebo voltage reference **10020**.

FIG. **101** shows an exemplary control signal waveform **10102**, and a corresponding exemplary placebo control signal waveform **10104** that is a delayed (or phase-shifted) version of control signal waveform **10102**. Control signal **10028** may comprise a control signal waveform such as control signal waveform **10102**. Phase-shifted placebo control signal **10030** may comprise a corresponding control signal waveform such as placebo control signal waveform **10104**.

In a receiver circuit embodiment that does not include a placebo UFD module **10004**, potential circuit re-radiation (and the frequency spectrum of such re-radiation) will be related to the control signal waveform being used, such as control signal waveform **10102**. In a receiver circuit embodiment that includes a placebo UFD module **10004**, the potential circuit re-radiation (and the frequency spectrum of such re-radiation) will be related to the control signal being used, such as control signal waveform **10102**, and the placebo control signal waveform being used, such as placebo control signal waveform **10104**.

FIG. **101** shows a combined signal waveform **10106** that represents a combination of control signal waveform **10102** and placebo control signal waveform **10104**. The potential circuit re-radiation (and the frequency spectrum there of) due to control signal waveform **10102** and placebo control signal waveform **10104** will be related to combined signal waveform **10106** (and the frequency spectrum there of). As would be apparent to persons skilled in the relevant art(s), combined signal waveform **10106** has a different frequency spectrum than control signal waveform **10102**. By utilizing at least one placebo control signal in addition to an actual control signal, a potentially re-radiated frequency spectrum can be adjusted to move potentially harmful circuit noise and potentially resulting DC offset and/or re-radiated components to a non-critical frequency band in output signal **10024**.

Furthermore, as shown in FIG. **101**, placebo control signal waveform **10104** may be phase-shifted by lesser or greater amounts from control signal waveform **10102**. Arrows **10108**, **10110**, **10112**, and **10114** indicate possible variations in the phase of placebo control signal waveform **10104**, with the corresponding variations in combined signal waveform **10106** indicated by arrows **10116**, **10118**, **10120**, and **10122**. By changing the phase of placebo control signal waveform **10104** in relation to control signal waveform **10102**, the frequency spectrum of potential re-radiation may be adjusted. Furthermore, changes in the amplitude and/or width of pulses on placebo control signal waveform **10104** may also be used to adjust the frequency spectrum and amplitude of potential re-radiation.

In embodiments, placebo output signal **10026** is not used in down-stream information signal processing. In alternative embodiments, placebo output signal **10026** may be used in down-stream information signal processing.

FIG. **117** depicts a flowchart **11700** that illustrates operational steps corresponding to the structure of FIG. **100** and waveforms of FIG. **101**, for down-converting an input signal and altering circuit re-radiation, according to an embodiment of the present invention. The invention is not limited to this operational description. Rather, it will be apparent to persons skilled in the relevant art(s) from the teachings herein that other operational control flows are within the scope and spirit of the present invention. In the following discussion, the steps in FIG. **117** will be described.

In step **11702**, an input signal is frequency down-converted with a first universal frequency down-conversion module to a first down-converted signal, wherein the input signal is down-converted according to a control signal, wherein the control signal comprises a train of pulses, wherein pulses of the control signal occur every 360+360·n degrees of a frequency of the input signal, wherein n is equal to any integer greater or equal 0.

In step **11704**, the control signal is phase-shifted, wherein the control signal is phase shifted in a range between 0 degrees and 360+360·n degrees of a frequency of the input signal (pulses of control signal and phase-shifted control signal may overlap). In alternative embodiments, the pulses are of width m degrees, and the control signal is phase-shifted in a range between m degrees and 360−m+360·n degrees of a frequency of the input signal (no overlap of pulses between control signal and phase-shifted control signal). In embodiments, the control signal is phase shifted

to a phase-shifted control signal in order to adjust at least one frequency of the re-radiated signal. In further embodiments, the control signal is phase shifted to a phase-shifted control signal in order to adjust at least one frequency of the re-radiated signal to be above a frequency range of interest of the input signal.

In step **11706**, the input signal is frequency down-converted with a second universal frequency down-conversion module to a second down-converted signal, wherein the input signal is down-converted according to the phase-shifted control signal. The second universal frequency down-conversion module is used as a placebo universal frequency down-conversion module.

In step **11708**, a signal is re-radiated that is at least a function of the control signal and the phase-shifted control signal.

Exemplary receiver with placebo circuit embodiments are described above. However, it should be understood that these examples are provided for illustrative purposes only. The invention is not limited to these embodiments. Alternate embodiments (including equivalents, extensions, variations, deviations, etc., of the embodiments described herein) will be apparent to persons skilled in the relevant art(s) based on the teachings contained herein. For example, further placebo UFD modules with additional placebo control signals may be added. The invention is intended and adapted to include such alternate embodiments.

7.2.2.3 Reducing Re-radiation with Adjacent Apertures

Potential control signal circuit re-radiation may be reduced or eliminated by the use of adjacent control signal pulses or apertures. By creating control signal pulses that are adjacent, the rising and falling edges of adjacent pulses may partially or entirely cancel out any re-radiation due to the individual pulses.

FIG. **102** illustrates an adjacent apertures receiver circuit **10200**, according to an embodiment of the present invention. Adjacent apertures receiver circuit **10200** comprises a first UFD module **10202**, a second UFD module **10204**, a control signal generator **10206**, and a phase shifter **10208**.

An input RF signal **10214** is received by first UFD module **10202**. First UFD module **10202** down-converts input RF signal **10214** according to a control signal **10220**, which is output by control signal generator **10206**, in a manner as described elsewhere herein. First UFD module **10202** outputs first output signal **10216**. First UFD module **10202** comprises a first UFT module **10210**.

Phase shifter **10208** receives control signal **10220**, and outputs a phase-shifted control signal **10222**. In an embodiment, the width of pulses on control signal **10220** and on phase-shifted control signal **10222** approach π radians, although other values could be used. Phase-shifted control signal **10222** is preferably shifted by π radians from control signal **10220**, although other values could be used.

Input RF signal **10214** is received by second UFD module **10204**. Second UFD module **10204** down-converts input RF signal **10214** according to phase-shifted control signal **10222**, in a manner as described elsewhere herein. Second UFD module **10204** outputs second output signal **10218**. Second UFD module **10204** comprises a second UFT module **10212**.

FIG. **103** shows an exemplary control signal waveform **10302**, and a corresponding π-shifted control signal waveform **10304**. The potentially re-radiated signals (and their associated frequency spectrums) due to control signal **10220** and phase-shifted control signal **10222** will be related to their waveforms and frequency spectrums, which may be represented by control signal waveform **10302** and π-shifted control signal waveform **10304**, respectively, for example.

Because the width of pulses on control signal waveform **10302** and π-shifted control signal waveform **10304** are equal to or less than π radians, their combined potentially re-radiated signal will be related to combined signal waveform **10306**. As control signal waveform **10302** and π-shifted control signal waveform **10306** approach having pulse widths equal to π radians, combined signal waveform **10306** will approach the equivalent of a DC level, with a voltage level substantially equivalent to the pulse amplitudes. In other words, combined signal waveform **10306** will approach a DC level because as pulses of waveforms **10302** and **10304** approach a width of π, the rising and falling edges of the waveforms **10302** and **10304** will increasingly cancel each other.

The use of adjacent apertures may lead to reduced levels of circuit re-radiation, and improved circuit performance. Re-radiated signal components will be due to combined signal waveform **10306**. Specifically, re-radiated signal components will be due to transitions from low to high and high to low in waveform **10306**, shown as spikes **10308**, but the frequency content of such re-radiated signal components due to spikes **10308** will primarily be above the frequency bands of interest.

FIG. **118**A depicts a flowchart **11800** that illustrates operational steps corresponding to the structure of FIG. **102** and waveforms of FIG. **103**, for down-converting an input signal and altering circuit re-radiation, according to an embodiment of the present invention. The invention is not limited to this operational description. Rather, it will be apparent to persons skilled in the relevant art(s) from the teachings herein that other operational control flows are within the scope and spirit of the present invention. In the following discussion, the steps in FIG. **118**A will be described.

In step **11802**, an input signal is frequency down-converted with a first universal frequency down-conversion module to a first down-converted signal, wherein the input signal is down-converted according to a control signal, wherein the control signal comprises a train of pulses, wherein the pulses have widths less than or equal to 180+360·n degrees of a frequency of the input signal, wherein n is any integer greater than or equal to 0.

In step **11804**, the control signal is phase shifted, wherein the control signal is phase-shifted by 180+360·n degrees of a frequency of the input signal. In an embodiment, the pulses of the control signal are substantially adjacent to pulses of the phase-shifted control signal.

In step **11806**, the input signal is frequency down-converted with a second universal frequency down-conversion module to a second down-converted signal, wherein the input signal is down-converted according to the phase-shifted control signal.

In step **11808**, a signal is re-radiated that is at least a function of the control signal and the phase-shifted control signal. In an embodiment, a spike is formed in the re-radiated signal at a transition of the adjacent pulses of the control signal and the phase-shifted control signal. In an embodiment, a voltage amplitude of the spike approaches zero as the pulses of the control signal and the pulses of the phase-shifted control signal approach 180+360·n degrees in width (i.e., the pulses become more adjacent). In an embodiment, at least one frequency of the spike is above a frequency range of interest of the input signal. In embodiments, as the pulse widths approach 180+360·n degrees of a frequency of the input signal, the re-radiated signal approaches a DC level.

In alternate embodiments, other adjacent control signal pulse configurations may be used. FIG. **104** illustrates an

exemplary adjacent apertures receiver circuit **10400**, according to an embodiment of the present invention. Circuit **10400** operates substantially similarly to circuit **10200**, but produces four control signals instead of two. Control signal generator **10410** outputs control signal **10432**, with pulse widths of π, which occur once every 4π radians. Circuit **10400** comprises a first phase shifter **10412**, a second phase shifter **10440**, and a third phase shifter **10442**, each of which further shifts the phase of control signal **10432** by π radians. In this manner, four adjacent control signal generator pulses, each of pulse width π radians, are generated that approach the equivalent of a DC level. Other control signal aperture durations and/or sequences will be apparent to persons skilled in the relevant art(s) based on the teachings contained herein.

Additional control signals may be used to produce even longer strings of adjacent pulses.

Furthermore, the use of adjacent apertures may reduce the need for input impedance matching and tank circuitry. This is because with adjacent apertures, the UFT modules in combination are closed for longer fractions of a control signal cycle and hence, the input signal is being stored more continuously (by a storage module, for example). Because the input signal is being stored more continuously, there is less opportunity or need to store the input signal in one or more input tank circuits during the periods when the UFT modules are open. In other words, more of the energy of the input waveform is being stored and used with adjacent apertures. Furthermore, having the UFT module(s) closed for longer periods of time affects the circuit input impedance, and may alter or decrease the need for input impedance matching.

FIG. **118**B depicts a continuation of flowchart **11800** that illustrates additional operational steps to those shown in FIG. **118**A corresponding to further adjacent aperture generators, such as shown in FIG. **104**, for down-converting an input signal and altering circuit re-radiation, according to an embodiment of the present invention. The invention is not limited to this operational description. Rather, it will be apparent to persons skilled in the relevant art(s) from the teachings herein that other operational control flows are within the scope and spirit of the present invention. In the following discussion, the steps in FIG. **118**B will be described.

In step **11810**, a phase-shifted control signal is phase shifted to a further phase-shifted control signal. The phase-control signal is phase shifted by the same amount as the prior phase shifter. This causes the current aperture or pulse to be the same width as, and adjacent to, the prior aperture.

In step **11812**, the input signal is frequency down-converted with a further universal frequency down-conversion module to a corresponding down-converted signal, wherein the input signal is down-converted according to the further phase-shifted control signal.

In step **11814**, a signal is re-radiated that is a function of at least the control signal and the phase-shifted control signals.

In step **11816**, operation proceeds to step **11810** if the number of universal frequency down-conversion modules (adjacent apertures) is less than some desired number x. This process forms a chain of adjacent apertures, of a number of pulses x.

Exemplary receivers using adjacent apertures embodiments are described above. However, it should be understood that these examples are provided for illustrative purposes only. The invention is not limited to these embodiments. Alternate embodiments (including equivalents, extensions, variations, deviations, etc., of the embodiments described herein) will be apparent to persons skilled in the relevant art(s) based on the teachings contained herein. For example, control signals with pulses of widths other than π radians where the control signals have different pulse widths, may be used. The invention is intended and adapted to include such alternate embodiments.

7.2.3 Additional DC Offset and Re-radiation Reduction Embodiments

Exemplary embodiments for DC Offset and/or re-radiation reduction or cancellation are described above. Such embodiments may be used alone or in combination, based on the application and on implementation issues. It should be understood that these examples are provided for illustrative purposes only. The invention is not limited to these embodiments. Alternate embodiments (including equivalents, extensions, variations, deviations, etc., of the embodiments described herein) will be apparent to persons skilled in the relevant art(s) based on the teachings contained herein. For example, many of the components described herein are optional, whether or not explicitly indicated as such. The invention is intended and adapted to include such alternate embodiments.

7.3 Example Embodiments to Improve Dynamic Range

Receivers, amplifiers, and other electronic circuits, may suffer from problems related to dynamic range. Generally, "dynamic range" refers to the ratio of the maximum to minimum signal input capability over which an amplifier or other component can operate within some specified range of performance. For instance, if an input signal to an amplifier causes the amplifier to exceed its dynamic range, i.e., the input signal amplitude is too large, the amplifier may no longer amplify properly, the amplifier may rail, and/or may operate in a non-linear region. In a receiver, the signal being amplified may be a down-converted signal. If the dynamic range of the amplifier, or other component, is exceeded, the value of the down-converted signal may be adversely affected.

The concept of dynamic range is further described in the following sub-sections. Furthermore, example methods and systems are provided in subsequent sections below for improving dynamic range.

7.3.1 Adjusting Universal Frequency Down-conversion Module Dynamic Range

Some circuit implementations may suffer from a lack of dynamic range. For instance, when input RF signals become too high or too low, they may cause a switch in a UFT module to remain continuously open or closed, regardless of the level of the control signal. This may result in problems with output signal linearity and output signal clipping, which may lead to errors in decoding the baseband output signal.

FIG. **105** illustrates an exemplary circuit for improving dynamic range, according to an embodiment of the present invention. Improved dynamic range circuit **10500** of FIG. **105** comprises a impedance match **10502**, a tank circuit **10504**, a UFD module **10506**, and a bias circuit **10508**. Bias circuit **10508** is used to adjust the center point of the input voltage range for UFD module **10506**, providing for greater input signal range.

In an embodiment, impedance match **10502** comprises an inductor **105 10**. The operation of the present and of additional embodiments for impedance match **10502** are further described elsewhere herein.

In an embodiment, tank circuit **10504** comprises a capacitor **10512** and an inductor **10514**. The operation of the

present and of additional embodiments for tank circuit **10504** are further described elsewhere herein.

UFD module **10506** comprises a UFT module **105 16**, a storage module **10520**, and a first voltage reference **10524**. The operation of the present and of additional embodiments for UFD module **10506** are further described elsewhere herein. UFT module **10516** comprises a MOSFET switch **10518** in the example embodiment of FIG. **105**. Storage module **10520** comprises a capacitor **10522** in the example embodiment of FIG. **105**. The structure and operation of the present and of additional embodiments for UFT module **10516** and storage module **10520** are further described elsewhere herein.

An input RF signal **10540** is input through impedance match **10502** to be received by a first terminal **10550** of UFD module **10506**. First terminal **10550** of UFD module **10506** is coupled to a first terminal **10552** of tank circuit **10504**. MOSFET switch **10518** in UFD module **10506** down-converts input RF signal **10540** according to a control signal **10548**, which is output by control signal generator **10526**. The output of MOSFET switch **10518** is stored in storage module **10520**. MOSFET switch **10518** outputs an output signal **10542**. In the example embodiment of FIG. **105**, MOSFET switch **10518** comprises a first terminal **10564** coupled to first terminal **10552** of tank circuit **10504**, a second terminal **10566** coupled to output signal **10542**, and a third terminal **10568** (gate) coupled to control signal **10548**.

Control signal generator **10526** generates control signal **10548**, as described elsewhere herein. Control signal **10548** preferably comprises a periodic signal, which preferably comprises a string of pulses. These pulses vary between a minimum and maximum voltage. For example, control signal **10548** may output pulses that vary between 0 volts and 2 volts, as shown in FIG. **106**A.

Input RF signal **10540** also comprises a range of signal values. For instance, input RF signal **10540** may vary between +0.75 volts and −0.75 volts, as shown in FIG. **106**B. In the current example, when the value of input RF signal **10540** is equal to −0.75 volts, this value is less than the minimum voltage of control signal **10548** (0 volts) applied to MOSFET switch **10518**, and hence MOSFET switch **10518** will be in the closed state for all values of control signal **10548** because the voltage from terminal **10568** (gate) to terminal **10564** of MOSFET switch **10518** is always positive, causing MOSFET switch **10518** to always conduct.

Likewise, it will be recognized by persons skilled in the relevant art(s) that input RF signal **10540** may comprise signal amplitudes greater than the maximum voltage of control signal **10548** (not illustrated in FIGS. **106**A and **106**B) applied to MOSFET switch **10518**. When input RF signal **10540** is equal to such a value, MOSFET switch **10518** will remain in the open state, for all values of control signal **10548**, because the voltage from terminal **10568** (gate) to terminal **10564** of MOSFET switch **10518** would always be negative, preventing MOSFET switch **10518** from ever conducting. Both conditions where control signal **10548** cannot effect switching of MOSFET switch **10518** are undesirable.

One solution is to modify the voltage swing of control signal **10548** such that it varies from +0.75 to −0.75 volts or greater, as does input RF signal **10540**. This solution may not be possible in all situations, however. For instance, this solution may not be possible when only a single voltage supply is available.

A further solution for this problem is to bias input RF signal **10540** such that it varies within the maximum and minimum voltage range of pulses of control signal **10548**. Thus, as long as input RF signal **10540** varies within the voltage range of control signal **10548**, control signal **10548** will control the turning on and turning off of MOSFET switch **10518**. FIG. **106**C shows an example biased input RF signal **10544**, that is biased to vary between +1.75 and +0.25 volts, within the range of control signal **10548**.

Bias circuit **10508** is used to adjust the bias applied to input RF signal **10540**. (It is noted that other bias configurations could alternatively be used.) Bias circuit **10508** comprises a second voltage reference **10528**, a first resistor **10530**, an optional capacitor **10532**, a third voltage reference **10534**, a second resistor **10536**, and a fourth voltage reference **10538**.

A first terminal **10554** of first resistor **10530** is coupled to a first voltage reference **10528**. A second terminal **10556** of first resistor **10530** is coupled to a first terminal **10558** of second resistor **10536** to create a bias point **10546**. Bias point **10546** is coupled to a second terminal **10560** of tank circuit **10504**. A second terminal **10562** of second resistor **10536** is coupled to fourth voltage reference **10538**.

First resistor **10530** and second resistor **10536** form a voltage divider circuit, to create bias point **10546**, as would be understood by persons skilled in the relevant art(s) from the teachings herein. Bias point **10546** provides a biasing voltage for input RF signal **10540**. A biased input RF signal **10544** is equal to input RF signal **10540** adjusted (e.g., added or subtracted) by the amount of voltage at bias point **10546**. In a preferred embodiment, biased input RF signal **10544** may be biased at the midpoint of the voltage swing of control signal **10548**. For example, biased input RF signal **10544** may be biased by bias point **10546** with a level of one volt, for a 0 volt to 2 volt varying control signal **10548**.

Optional capacitor **10532** coupled between bias point **10546** and third voltage reference **10534** may be optionally inserted to aid in stabilizing bias point **10546**.

Other embodiments for bias circuit **10508** will be apparent to persons skilled in the relevant art(s) from the teachings herein. For instance, FIG. **107** illustrates an exemplary bias circuit **10708** according to an embodiment of the present invention, wherein a tank circuit **10504** and/or an impedance match circuit **10502** as shown in FIG. **105** are not present. Bias circuit **10708** in FIG. **107** adjusts a bias point for an input to UFD module **10506**. Bias circuit **10708** of FIG. **107** places a bias directly on input RF signal **10540**, as opposed to bias circuit **10508** of FIG. **105** which applies a bias voltage through tank circuit **10504**.

FIG. **119** depicts a flowchart **11900** that illustrates operational steps corresponding to FIGS. **105–107**, for improving dynamic range, according to an embodiment of the present invention. The invention is not limited to this operational description. Rather, it will be apparent to persons skilled in the relevant art(s) from the teachings herein that other operational control flows are within the scope and spirit of the present invention. In the following discussion, the steps in FIG. **119** will be described.

In step **11902**, a bias voltage is applied to an input signal. In embodiments, the center voltage of the input signal is adjusted by application of the bias voltage. In embodiments, the input signal is coupled to a center terminal of a resistor divider circuit, which supplies the bias voltage. In an embodiment, a tank circuit is used to couple the input signal to the center terminal of the resistor divider circuit.

In step **11904**, the biased input signal is frequency down-converted with a first universal frequency down-conversion module to a down-converted signal.

Other embodiments for improving dynamic range include the use of complementary FETs. Complementary FET embodiments are further described in the co-pending U.S. Patent Application entitled "Method and System for Down-converting Electromagnetic Signals Having Optimized Switch Structures," Ser. No. 09/293,095. Complementary FETs also have the advantage of using control signals of opposite polarity, which tends to reduce or cancel re-radiation due to a control signal.

Other circuit embodiments for improving dynamic range include modifying control signal pulse amplitude, and/or modifying the switch, or FET, size, as would be understood by persons skilled in the relevant art(s) from the teachings herein. It should be understood that the above bias circuit examples are provided for illustrative purposes only. The invention is not limited to these embodiments. Alternate embodiments (including equivalents, extensions, variations, deviations, etc., of the embodiments described herein) will be apparent to persons skilled in the relevant art(s) based on the teachings contained herein. The invention is intended and adapted to include such alternate embodiments.

7.4 Example Receiver and Transmitter Embodiments for Addressing DC Offset and Re-radiation

In this section, embodiments, according to the present invention, are provided for reducing or eliminating DC offset and/or reducing or eliminating circuit re-radiation in receivers, including I/Q modulation receivers and other modulation scheme receivers. These embodiments are described herein for purposes of illustration, and not limitation. The invention is not limited to these embodiments. Alternate embodiments (including equivalents, extensions, variations, deviations, etc., of the embodiments described herein) will be apparent to persons skilled in the relevant art(s) based on the teachings contained herein. The invention is intended and adapted to include such alternate embodiments.

7.4.1 Example I/Q Modulation Receiver Embodiments

FIG. **25** illustrates an exemplary I/Q modulation receiver **2500**, according to an embodiment of the present invention. I/Q modulation receiver **2500** has additional advantages of reducing or eliminating unwanted DC offsets and circuit re-radiation.

I/Q modulation receiver **2500** comprises a first UFD module **2502**, a first optional filter **2504**, a second UFD module **2506**, a second optional filter **2508**, a third UFD module **2510**, a third optional filter **2512**, a fourth UFD module **2514**, a fourth filter **2516**, an optional LNA **2518**, a first differential amplifier **2520**, a second differential amplifier **2522**, and an antenna **2572**.

I/Q modulation receiver **2500** receives, down-converts, and demodulates a I/Q modulated RF input signal **2582** to an I baseband output signal **2584**, and a Q baseband output signal **2586**. I/Q modulated RF input signal comprises a first information signal and a second information signal that are I/Q modulated onto an RF carrier signal. I baseband output signal **2584** comprises the first baseband information signal. Q baseband output signal **2586** comprises the second baseband information signal.

Antenna **2572** receives I/Q modulated RF input signal **2582**. I/Q modulated RF input signal **2582** is output by antenna **2572** and received by optional LNA **2518**. When present, LNA **2518** amplifies I/Q modulated RF input signal **2582**, and outputs amplified I/Q signal **2588**.

First UFD module **2502** receives amplified I/Q signal **2588**. First UFD module **2502** down-converts the I-phase signal portion of amplified input I/Q signal **2588** according to an I control signal **2590**. First UFD module **2502** outputs an I output signal **2598**.

In an embodiment, first UFD module **2502** comprises a first storage module **2524**, a first UFT module **2526**, and a first voltage reference **2528**. In an embodiment, a switch contained within first UFT module **2526** opens and closes as a function of I control signal **2590**. As a result of the opening and closing of this switch, which respectively couples and de-couples first storage module **2524** to and from first voltage reference **2528**, a down-converted signal, referred to as I output signal **2598**, results. First voltage reference **2528** may be any reference voltage, and is preferably ground. I output signal **2598** is stored by first storage module **2524**.

In a preferred embodiment, first storage module **2524** comprises a first capacitor **2574**. In addition to storing I output signal **2598**, first capacitor **2574** reduces or prevents a DC offset voltage resulting from above described charge injection from appearing on I output signal **2598**, in a similar fashion to that of capacitor **9126** shown in FIG. **91**. Refer to section 7.2.1.3 above for further discussion on reducing or eliminating charge injection with a series capacitor such as capacitor **9126**.

I output signal **2598** is received by optional first filter **2504**. When present, first filter **2504** is a high pass filter to at least filter I output signal **2598** to remove any carrier signal "bleed through". In a preferred embodiment, when present, first filter **2504** comprises a first resistor **2530**, a first filter capacitor **2532**, and a first filter voltage reference **2534**. Preferably, first resistor **2530** is coupled between I output signal **2598** and a filtered I output signal **2507**, and first filter capacitor **2532** is coupled between filtered I output signal **2507** and first filter voltage reference **2534**. Alternately, first filter **2504** may comprise any other applicable filter configuration as would be understood by persons skilled in the relevant art(s). First filter **2504** outputs filtered I output signal **2507**.

Second UFD module **2506** receives amplified I/Q signal **2588**. Second UFD module **2506** down-converts the inverted I-phase signal portion of amplified input I/Q signal **2588** according to an inverted I control signal **2592**. Second UFD module **2506** outputs an inverted I output signal **2501**.

In an embodiment, second UFD module **2506** comprises a second storage module **2536**, a second UFT module **2538**, and a second voltage reference **2540**. In an embodiment, a switch contained within second UFT module **2538** opens and closes as a function of inverted I control signal **2592**. As a result of the opening and closing of this switch, which respectively couples and de-couples second storage module **2536** to and from second voltage reference **2540**, a down-converted signal, referred to as inverted I output signal **2501**, results. Second voltage reference **2540** may be any reference voltage, and is preferably ground. Inverted I output signal **2501** is stored by second storage module **2536**.

In a preferred embodiment, second storage module **2536** comprises a second capacitor **2576**. In addition to storing inverted I output signal **2501**, second capacitor **2576** reduces or prevents a DC offset voltage resulting from above described charge injection from appearing on inverted I output signal **2501**, in a similar fashion to that of capacitor **9126** shown in FIG. **91**. Refer to section 7.2.1.3 above for further discussion on reducing or eliminating charge injection with a series capacitor such as capacitor **9126**.

Inverted I output signal **2501** is received by optional second filter **2508**. When present, second filter **2508** is a high pass filter to at least filter inverted I output signal **2501** to remove any carrier signal "bleed through". In a preferred

embodiment, when present, second filter **2508** comprises a second resistor **2542**, a second filter capacitor **2544**, and a second filter voltage reference **2546**. Preferably, second resistor **2542** is coupled between inverted I output signal **2501** and a filtered inverted I output signal **2509**, and second filter capacitor **2544** is coupled between filtered inverted I output signal **2509** and second filter voltage reference **2546**. Alternately, second filter **2508** may comprise any other applicable filter configuration as would be understood by persons skilled in the relevant art(s). Second filter **2508** outputs filtered inverted I output signal **2509**.

First differential amplifier **2520** receives filtered I output signal **2507** at its non-inverting input and receives filtered inverted I output signal **2509** at its inverting input. First differential amplifier **2520** subtracts filtered inverted I output signal **2509** from filtered I output signal **2507**, amplifies the result, and outputs I baseband output signal **2584**. Other suitable subtractor and/or amplification modules may be substituted for first differential amplifier **2520**, and second differential amplifier **2522**, as would be understood by persons skilled in the relevant art(s) from the teachings herein. Because filtered inverted I output signal **2509** is substantially equal to an inverted version of filtered I output signal **2507**, I baseband output signal **2584** is substantially equal to filtered I output signal **2509**, with its amplitude doubled. Furthermore, filtered I output signal **2507** and filtered inverted I output signal **2509** may comprise substantially equal noise and DC offset contributions of the same polarity from prior down-conversion circuitry, including first UFD module **2502** and second UFD module **2506**, respectively. When first differential amplifier **2520** subtracts filtered inverted I output signal **2509** from filtered I output signal **2507**, these noise and DC offset contributions substantially cancel each other.

Third UFD module **2510** receives amplified I/Q signal **2588**. Third UFD module **2510** down-converts the Q-phase signal portion of amplified input I/Q signal **2588** according to an Q control signal **2594**. Third UFD module **2510** outputs an Q output signal **2503**.

In an embodiment, third UFD module **2510** comprises a third storage module **2548**, a third UFT module **2550**, and a third voltage reference **2552**. In an embodiment, a switch contained within third UFT module **2550** opens and closes as a function of Q control signal **2594**. As a result of the opening and closing of this switch, which respectively couples and de-couples third storage module **2548** to and from third voltage reference **2552**, a down-converted signal, referred to as Q output signal **2503**, results. Third voltage reference **2552** may be any reference voltage, and is preferably ground. Q output signal **2503** is stored by third storage module **2548**.

In a preferred embodiment, third storage module **2548** comprises a third capacitor **2578**. In addition to storing Q output signal **2503**, third capacitor **2578** reduces or prevents a DC offset voltage resulting from above described charge injection from appearing on Q output signal **2503**, in a similar fashion to that of capacitor **9126** shown in FIG. **91**. Refer to section 7.2.1.3 above for further discussion on reducing or eliminating charge injection with a series capacitor such as capacitor **9126**.

Q output signal **2503** is received by optional third filter **2512**. When present, third filter **2512** is a high pass filter to at least filter Q output signal **2503** to remove any carrier signal "bleed through". In a preferred embodiment, when present, third filter **2512** comprises a third resistor **2554**, a third filter capacitor **2558**, and a third filter voltage reference **2558**. Preferably, third resistor **2554** is coupled between Q output signal **2503** and a filtered Q output signal **2511**, and third filter capacitor **2556** is coupled between filtered Q output signal **2511** and third filter voltage reference **2558**. Alternately, third filter **2512** may comprise any other applicable filter configuration as would be understood by persons skilled in the relevant art(s). Third filter **2512** outputs filtered Q output signal **2511**.

Fourth UFD module **2514** receives amplified I/Q signal **2588**. Fourth UFD module **2514** down-converts the inverted Q-phase signal portion of amplified input I/Q signal **2588** according to an inverted Q control signal **2596**. Fourth UFD module **2514** outputs an inverted Q output signal **2505**.

In an embodiment, fourth UFD module **2514** comprises a fourth storage module **2560**, a fourth UFT module **2562**, and a fourth voltage reference **2564**. In an embodiment, a switch contained within fourth UFT module **2562** opens and closes as a function of inverted Q control signal **2596**. As a result of the opening and closing of this switch, which respectively couples and de-couples fourth storage module **2560** to and from fourth voltage reference **2564**, a down-converted signal, referred to as inverted Q output signal **2505**, results. Fourth voltage reference **2564** may be any reference voltage, and is preferably ground. Inverted Q output signal **2505** is stored by fourth storage module **2560**.

In a preferred embodiment, fourth storage module **2560** comprises a fourth capacitor **2580**. In addition to storing inverted Q output signal **2505**, fourth capacitor **2580** reduces or prevents a DC offset voltage resulting from above described charge injection from appearing on inverted Q output signal **2505**, in a similar fashion to that of capacitor **9126** shown in FIG. **91**. Refer to section 7.2.1.3 above for further discussion on reducing or eliminating charge injection with a series capacitor such as capacitor **9126**.

Inverted Q output signal **2505** is received by optional fourth filter **2516**. When present, fourth filter **25 16** is a high pass filter to at least filter inverted Q output signal **2505** to remove any carrier signal "bleed through". In a preferred embodiment, when present, fourth filter **2516** comprises a fourth resistor **2566**, a fourth filter capacitor **2568**, and a fourth filter voltage reference **2570**. Preferably, fourth resistor **2566** is coupled between inverted Q output signal **2505** and a filtered inverted Q output signal **2513**, and fourth filter capacitor **2568** is coupled between filtered inverted Q output signal **2513** and fourth filter voltage reference **2570**. Alternately, fourth filter **2516** may comprise any other applicable filter configuration as would be understood by persons skilled in the relevant art(s). Fourth filter **2516** outputs filtered inverted Q output signal **2513**.

Second differential amplifier **2522** receives filtered Q output signal **2511** at its non-inverting input and receives filtered inverted Q output signal **2513** at its inverting input. Second differential amplifier **2522** subtracts filtered inverted Q output signal **2513** from filtered Q output signal **2511**, amplifies the result, and outputs Q baseband output signal **2586**. Because filtered inverted Q output signal **2513** is substantially equal to an inverted version of filtered Q output signal **2511**, Q baseband output signal **2586** is substantially equal to filtered Q output signal **2513**, with its amplitude doubled. Furthermore, filtered Q output signal **2511** and filtered inverted Q output signal **2513** may comprise substantially equal noise and DC offset contributions of the same polarity from prior down-conversion circuitry, including third UFD module **2510** and fourth UFD module **2514**, respectively. When second differential amplifier **2522** subtracts filtered inverted Q output signal **2513** from filtered Q output signal **2511**, these noise and DC offset contributions substantially cancel each other.

FIG. **120** depicts a flowchart. **12000** that illustrates operational steps corresponding to FIG. **25**, for down-converting a RF I/Q modulated signal and reducing DC offset voltages, according to an embodiment of the present invention. The invention is not limited to this operational description. Rather, it will be apparent to persons skilled in the relevant art(s) from the teachings herein that other operational control flows are within the scope and spirit of the present invention. In the following discussion, the steps in FIG. **120** will be described.

In step **12002**, an input signal is received, wherein the input signal comprises an RF I/Q modulated signal.

In step **12004**, the input signal is frequency down-converted with a first universal frequency down-conversion module to a first down-converted signal, according to a first control signal. In an embodiment, the input signal is frequency down-converted to a non-inverted I-phase signal portion of the RF I/Q modulated signal. For instance, in an embodiment, a first phase of the in-phase signal portion of the RF I/Q modulated signal is under-sampled. In an embodiment, the RF I/Q modulated signal may be under-sampled every 3.0 cycles of a frequency of the RF I/Q modulated signal by the first control signal. Furthermore, in embodiments, a first DC offset voltage in the first down-converted signal is reduced by a capacitor of the first universal frequency down-conversion module.

In step **12006**, the input signal is frequency down-converted with a second universal frequency down-conversion module to a second down-converted signal, according to a second control signal. In an embodiment, the input signal is frequency down-converted to an inverted Q-phase signal portion of the RF I/Q modulated signal. For instance, in an embodiment, a second phase of the in-phase signal portion of the RF I/Q modulated signal is under-sampled, wherein the second phase of the in-phase signal portion is of an opposite phase to the first phase under-sampled of the in-phase signal portion. The RF I/Q modulated signal may be sampled 1.5 cycles of a frequency of the RF I/Q modulated signal after under-sampling the RF I/Q modulated signal in step **12004**, for example. Furthermore, in embodiments, a second DC offset voltage in the second down-converted signal is reduced by a capacitor of the second universal frequency down-conversion module.

In step **12008**, the second down-converted signal is subtracted from the first down-converted signal to form a first output signal. In embodiments, a first DC offset voltage in the first down-converted signal and a second DC offset voltage in the second down-converted signal cancel one another.

In step **12010**, the input signal is frequency down-converted with a third universal frequency down-conversion module to a third down-converted signal, according to a third control signal. In an embodiment, the input signal is frequency down-converted to a non-inverted Q-phase signal portion of the RF I/Q modulated signal. For instance, in an embodiment, a third phase of the quadrature-phase signal portion of the RF I/Q modulated signal is under-sampled. The RF I/Q modulated signal may be under-sampled 0.75 cycles of the frequency of the RF I/Q modulated signal after under-sampling of the RF I/Q modulated signal occurs in step **12004**, for example. Furthermore, in embodiments, a third DC offset voltage in the third down-converted signal is reduced by a capacitor of the third universal frequency down-conversion module.

In step **12012**, the input signal is frequency down-converted with a fourth universal frequency down-conversion module to a fourth down-converted signal, according to a fourth control signal. In an embodiment, the input signal is frequency down-converted to an inverted I-phase signal portion of the RF I/Q modulated signal. For instance, in an embodiment, a fourth phase of the quadrature-phase signal portion of the RF I/Q modulated signal is under-sampled, wherein the fourth phase of the quadrature-phase signal portion is of an opposite phase to the third phase under-sampled of the quadrature-phase signal portion. In an embodiment, the RF I/Q modulated signal may be sampled 1.5 cycles of the frequency of the RF I/Q modulated signal after under-sampling of the RF I/Q modulated signal occurs in step **12004**, for example. Furthermore, in embodiments, a fourth DC offset voltage in the fourth down-converted signal is reduced by a capacitor of fourth universal frequency down-conversion module.

In step **12014**, the fourth down-converted signal is subtracted from the third down-converted signal to form a second output signal. In embodiments, a third DC offset voltage in the third down-converted signal and a fourth DC offset voltage in the fourth down-converted signal cancel one another.

In step **12016**, a signal is re-radiated that comprises attenuated components of first, second, third, and fourth control signal pulses, wherein the attenuated components of the first, second, third, and fourth control signal pulses form a cumulative frequency, as discussed above.

In step **12018**, the first, second, third, and fourth control signal pulses are configured such that the cumulative frequency is greater than a frequency of the input signal, as discussed above.

7.4.1.1 Example I/Q Modulation Control Signal Generator Embodiments

FIG. **26** illustrates an exemplary block diagram for I/Q modulation control signal generator **2600**, according to an embodiment of the present invention. I/Q modulation control signal generator **2600** generates I control signal **2590**, inverted I control signal **2592**, Q control signal **2594**, and inverted Q control signal **2596** used by I/Q modulation receiver **2500** of FIG. **25**. I control signal **2590** and inverted I control signal **2592** operate to down-convert the I-phase portion of an input I/Q modulated RF signal. Q control signal **2594** and inverted Q control signal **2596** act to down-convert the Q-phase portion of the input I/Q modulated RF signal. Furthermore, I/Q modulation control signal generator **2600** has the advantage of generating control signals in a manner such that resulting collective circuit re-radiation is radiated at one or more frequencies outside of the frequency range of interest. For instance, potential circuit re-radiation is radiated at a frequency substantially greater than that of the input RF carrier signal frequency.

I/Q modulation control signal generator **2600** comprises a local oscillator **2602**, a first divide-by-two module **2604**, a 180 degree phase shifter **2606**, a second divide-by-two module **2608**, a first pulse generator **2610**, a second pulse generator **2612**, a third pulse generator **2614**, and a fourth pulse generator **2616**.

Local oscillator **2602** outputs an oscillating signal **2618**. FIG. **27** shows an exemplary oscillating signal **2618**.

First divide-by-two module **2604** receives oscillating signal **2618**, divides oscillating signal **2618** by two,: and outputs a half frequency LO signal **2620** and a half frequency inverted LO signal **2626**. FIG. **27** shows an exemplary half frequency LO signal **2620**. Half frequency inverted LO signal **2626** is an inverted version of half frequency LO signal **2620**. First divide-by-two module **2604** may be implemented in circuit logic, hardware, software, or any combination there of, as would be known by persons skilled in the relevant art(s).

180 degree phase shifter **2606** receives oscillating signal **2618**, shifts the phase of oscillating signal **2618** by 180 degrees, and outputs phase-shifted LO signal **2622**. 180 degree phase shifter **2606** may be implemented in circuit logic, hardware, software, or any combination there of, as would be known by persons skilled in the relevant art(s). In alternative embodiments, other amounts of phase shift may be used.

Second divide-by two module **2608** receives phase-shifted LO signal **2622**, divides phase-shifted LO signal **2622** by two, and outputs a half frequency phase-shifted LO signal **2624** and a half frequency inverted phase-shifted LO signal **2628**. FIG. **27** shows an exemplary half frequency phase-shifted LO signal **2624**. Half frequency inverted phase-shifted LO signal **2628** is an inverted version of half frequency phase-shifted LO signal **2624**. Second divide-by-two module **2608** may be implemented in circuit logic, hardware, software, or any combination there of, as would be known by persons skilled in the relevant art(s).

First pulse generator **2610** receives half frequency LO signal **2620**, generates an output pulse whenever a rising edge is received on half frequency LO signal **2620**, and outputs I control signal **2590**. FIG. **27** shows an exemplary I control signal **2590**.

Second pulse generator **2612** receives half frequency inverted LO signal **2626**, generates an output pulse whenever a rising edge is received on half frequency inverted LO signal **2626**, and outputs inverted I control signal **2592**. FIG. **27** shows an exemplary inverted I control signal **2592**.

Third pulse generator **2614** receives half frequency phase-shifted LO signal **2624**, generates an output pulse whenever a rising edge is received on half frequency phase-shifted LO signal **2624**, and outputs Q control signal **2594**. FIG. **27** shows an exemplary Q control signal **2594**.

Fourth pulse generator **2616** receives half frequency inverted phase-shifted LO signal **2628**, generates an output pulse whenever a rising edge is received on half frequency inverted phase-shifted LO signal **2628**, and outputs inverted Q control signal **2596**. FIG. **27** shows an exemplary inverted Q control signal **2596**.

In a preferred embodiment, control signals **2590**,**2592**, **2594** and **2596** output pulses having a width equal to one-half of a period of I/Q modulated RF input signal **2582**. The invention, however, is not limited to these pulse widths, and control signals **2590**, **2592**, **2594**, and **2596** may comprise pulse widths of any fraction of, or multiple and fraction of, a period of I/Q modulated RF input signal **2582**.

First, second, third, and fourth pulse generators **2610**, **2612**, **2614**, and **2616** may be implemented in circuit logic, hardware, software, or any combination there of, as would be known by persons skilled in the relevant art(s).

As shown in FIG. **27**, control signals **2590**, **2592**, **2594**, and **2596** comprise pulses that are non-overlapping. Furthermore, in this example, pulses appear on these signals in the following order: I control signal **2590**, Q control signal **2594**, inverted I control signal **2592**, and inverted Q control signal **2596**. Potential circuit re-radiation from I/Q modulation receiver **2500** may comprise frequency components from a combination of these control signals.

For example, FIG. **28** shows an overlay of pulses from I control signal **2590**, Q control signal **2594**, inverted I control signal **2592**, and inverted Q control signal **2596**. When pulses from these control signals leak to through first, second, third, and fourth UFD modules **2502**, **2506**,**2510**, and **2514** of to antenna **2582** (shown in FIG. **25**), they may be radiated from I/Q modulation receiver **2500**, with a combined waveform that appears to have a primary frequency equal to four times the frequency of any single one of control signals **2590**, **2592**, **2594**, and **2596**. FIG. **27** shows an example combined control signal **2702**.

FIG. **28** also shows an example I/Q modulation RF input signal **2582** overlaid upon control signals **2590**, **2592**, **2594**, and **2596**. As shown in FIG. **28**, pulses on I control signal **2590** overlay and act to down-convert a positive I-phase portion of I/Q modulation RF input signal **2582**. Pulses on inverted I control signal **2592** overlay and act to down-convert a negative I-phase portion of I/Q modulation RF input signal **2582**. Pulses on Q control signal **2594** overlay and act to down-convert arising Q-phase portion of I/Q modulation RF input signal **2582**. Pulses on inverted Q control signal **2596** overlay and act to down-convert a falling Q-phase portion of I/Q modulation RF input signal **2582**.

As FIG. **28** further shows in this example, the frequency ratio between the combination of control signals **2590**, **2592**, **2594**, and **2596** and I/Q modulation RF input signal **2582** is 4:3. Because the frequency of the potentially re-radiated signal, combined control signal **2702**, is substantially different from that of the signal being down-converted, I/Q modulation RF input signal **2582**, it does not interfere with signal down-conversion as it is out of the frequency band of interest, and hence may be filtered out. In this manner, I/Q modulation receiver **2500** reduces problems due to circuit re-radiation. As will be understood by persons skilled in the relevant art(s) from the teachings herein, frequency ratios other than 4:3 may be implemented to achieve similar reduction of problems of circuit re-radiation.

It should be understood that the above control signal generator circuit example is provided for illustrative purposes only. The invention is not limited to these embodiments. Alternative embodiments (including equivalents, extensions, variations, deviations, etc., of the embodiments described herein) for I/Q modulation control signal generator **2600** will be apparent to persons skilled in the relevant art(s) from the teachings herein, and are within the scope of the present invention.

7.4.1.2 Detailed Example I/Q Modulation Receiver Embodiment with Exemplary Waveforms

FIG. **29** illustrates a more detailed example circuit implementation of I/Q modulation receiver **2500**, according to an embodiment of the present invention. FIGS. **30**–**40** show waveforms related to an example implementation of I/Q modulation receiver **2500** of FIG. **29**.

FIGS. **30** and **31** show first and second input data signals **2902** and **2904** to be I/Q modulated with a RF carrier signal frequency as the I-phase and Q-phase information signals, respectively.

FIGS. **33** and **34** show the signals of FIG. **30** and **31** after modulation with a RF carrier signal frequency, respectively, as I-modulated signal **2906** and Q-modulated signal **2908**.

FIG. **32** shows an I/Q modulation RF input signal **2582** formed from I-modulated signal **2906** and Q-modulated signal **2908** of FIGS. **33** and **34**, respectively.

FIG. **39** shows an overlaid view of filtered I output signal **3902** and filtered inverted I output signal **3904**.

FIG. **40** shows an overlaid view of filtered Q output signal **4002** and filtered inverted Q output signal **4004**.

FIGS. **35** and **36** show I baseband output signal **2584** and Q baseband output signal **2586**, respectfully. A data transition **3202** is indicated in both I baseband output signal **2584** and Q baseband output signal **2586**. The corresponding data transition **3202** is indicated in I-modulated signal **2906** of FIG. **33**, Q-modulated signal **2908** of FIG. **34**, and I/Q modulation RF input signal **2582** of FIG. **32**.

FIGS. **37** and **38** show I baseband output signal **2584** and Q baseband output signal **2586** over a wider time interval.

7.4.1.3 Example Single Channel Receiver Embodiment

FIG. **41** illustrates an exemplary single channel receiver **4100**, corresponding to either the I or Q channel of I/Q modulation receiver **2500**, according to an embodiment of the present invention. Single channel receiver **4100** can down-convert an input RF signal **4106** modulated according to AM, PM, FM, and other modulation schemes. Refer to section 7.4.1 above for further description on the operation of single channel receiver **4100**.

7.4.1.4 Alternative Example I/Q Modulation Receiver Embodiment

FIG. **42** illustrates an exemplary I/Q modulation receiver **4200**, according to an embodiment of the present invention. I/Q modulation receiver **4200** receives, down-converts, and demodulates an I/Q modulated RF input signal **2582** to an I baseband output signal **2584**, and a Q baseband output signal **2586**. I/Q modulation receiver **4200** has additional advantages of reducing or eliminating unwanted DC offsets and circuit re-radiation, in a similar fashion to that of I/Q modulation receiver **2500** described above.

7.4.1.5 Example Transmitter Embodiment

FIG. **43** illustrates an exemplary I/Q modulation transmitter **4300** (only I channel is shown), according to an embodiment of the present invention. I/Q modulation transmitter has a configuration substantially similar to I/Q modulation receiver **2500**. Hence, an I/Q modulation transmitter **4300** and an I/Q modulation receiver **2500** may be implemented with at least some common circuit components.

I/Q modulation transmitter **4300** comprises an optional first filter **4302**, a second optional filter **4306**, and a third optional filter **4310**. When present, second and third optional filters **4306** and **4310** may comprise first and second resistors **4334** and **4336**, respectively. In alternative embodiments, second and third optional filters **4306** and **4310** may comprise inductors, capacitors, and/or other filtering elements, alone or in combination.

8. CONCLUSION

While various embodiments of the present invention have been described above, it should be understood that they have been presented by way of example only, and not limitation. It will be apparent to persons skilled in the relevant art that various changes in form and detail can be made therein without departing from the spirit and scope of the invention. Thus, the breadth and scope of the present invention should not be limited by any of the above-described exemplary embodiments, but should be defined only in accordance with the following claims and their equivalents.

What is claimed is:

1. An apparatus for down-converting an electromagnetic signal, comprising:

a first frequency down-conversion module that receives an input signal, wherein said first frequency down-conversion module down-converts said input signal according to a first control signal and outputs a first down-converted signal;

a second frequency down-conversion module that receives said input signal, wherein said second frequency down-conversion module down-converts said input signal according to a second control signal and outputs a second down-converted signal;

a first subtractor module that subtracts said second down-converted signal from said first down-converted signal and outputs a channel down-converted signal;

a third frequency down-conversion module that receives said input signal, wherein said third frequency down-conversion module down-converts said input signal according to a third control signal and outputs a third down-converted signal;

a fourth frequency down-conversion module that receives said input signal, wherein said fourth frequency down-conversion module down-converts said input signal according to a fourth control signal and outputs a fourth down-converted signal; and

a second subtractor module that subtracts said fourth down-converted signal from said third down-converted signal and outputs a second channel down-converted signal;

wherein said input signal comprises an I/Q modulated signal;

wherein said first channel down-converted signal comprises an I-phase information signal portion of said I/Q modulated signal, and wherein said second channel down-converted signal comprises a Q-phase information signal portion of said I/Q modulated signal; and

wherein said first universal frequency down-conversion module under-samples said input signal according to said first control signal, and said second universal frequency down-conversion module under-samples said input signal according to said second control signal.

2. The apparatus of claim **1**, wherein said input signal is a RF carrier signal that is AM, FM, or PM modulated with an information signal.

3. The apparatus of claim **2**, wherein said channel down-converted signal is a baseband signal.

4. The apparatus of claim **2**, wherein said channel down-converted signal is an intermediate frequency signal.

5. The apparatus of claim **1**, wherein said first control signal comprises a first control pulse and said second control signal comprises a second control pulse, wherein said second control signal pulse is delayed relative to said first control signal pulse by 0.5+n cycles of said input signal, wherein n is an integer.

6. The apparatus of claim **1**, wherein said first subtractor comprises a differential amplifier.

7. The apparatus of claim **1**, wherein said first subtractor and said second subtractor each comprise a differential amplifier.

8. The apparatus of claim **1**, further comprising:

a first filter that filters said first down-converted signal;

a second filter that filters said second down-converted signal;

a third filter that filters said third down-converted signal; and

a fourth filter that filters said fourth down-converted signal.

9. The apparatus of claim **8**, wherein said first, second, third, and fourth filters each comprise a low-pass filter.

10. The apparatus of claim **9**, wherein said low-pass filter comprises a resistor and a capacitor.

11. The apparatus of claim **1**, further comprising a low-noise amplifier that amplifies said input signal.

12. The apparatus of claim **1**, wherein said first control signal comprises a first control signal pulse, said second control signal comprises a second control signal pulse, said third control signal comprises a third control signal pulse, and said fourth control signal comprises a fourth control signal pulse;

wherein a potentially re-radiated signal comprises attenuated components of said first, second, third, and fourth control signal pulses to form a cumulative frequency; and

wherein said cumulative frequency of said potentially re-radiated signal is chosen to be greater than a frequency of said input signal.

13. The apparatus of claim **1**, wherein a first DC offset voltage in said first down-converted signal due to said first frequency down-conversion module and a second DC offset voltage in said second down-converted signal due to said second frequency down-conversion module are substantially cancelled from said first channel output signal in said first subtractor; and

wherein a third DC offset voltage in said third down-converted signal due to said third frequency down-conversion module and a fourth DC offset voltage in said fourth down-converted signal due to said fourth frequency down-conversion module are substantially cancelled from said second channel output signal in said second subtractor.

14. The apparatus of claim **1**, further comprising at least one control signal generator that outputs said first, said second, said third, and said fourth control signal.

15. An apparatus for down-converting an electromagnetic signal, comprising:

a first frequency down-conversion module that receives an input signal, wherein said first frequency down-conversion module down-converts said input signal according to a first control signal and outputs a first down-converted signal;

a second frequency down-conversion module that receives said input signal, wherein said second frequency down-conversion module down-converts said input signal according to a second control signal and outputs a second down-converted signal;

a subtractor module that subtracts said second down-converted signal from said first down-converted signal and outputs a channel down-converted signal;

a third frequency down-conversion module that receives said input signal, wherein said third frequency down-conversion module down-converts said input signal according to a third control signal and outputs a third down-converted signal;

a fourth frequency down-conversion module that receives said input signal, wherein said fourth frequency down-conversion module down-converts said input signal according to a fourth control signal and outputs a fourth down-converted signal; and

a second subtractor module that subtracts said fourth down-converted signal from said third down-converted signal and outputs a second channel down-converted signal;

wherein said input signal comprises an I/Q modulated signal;

wherein said first channel down-converted signal comprises an I-phase information signal portion of said I/Q modulated signal, and wherein said second channel down-converted signal comprises a Q-phase information signal portion of said I/Q modulated signal; and

wherein said first and said second frequency down-conversion modules each comprise a switch and a storage element, wherein a first node of said switch is coupled to anode of said storage element, and a second node of said switch is coupled to a reference potential.

16. The apparatus of claim **15**, wherein said storage element comprises a capacitor in series with said input signal, wherein said capacitor reduces a DC offset voltage.

17. An apparatus for down-converting an electromagnetic signal, comprising:

a first frequency down-conversion module that receives an input signal, wherein said first frequency down-conversion module down-converts said input signal according to a first control signal and outputs a first down-converted signal;

a second frequency down-conversion module that receives said input signal, wherein said second frequency down-conversion module down-converts said input signal according to a second control signal and outputs a second down-converted signal;

a subtractor module that subtracts said second down-converted signal from said first down-converted signal and outputs a channel down-converted signal;

a third frequency down-conversion module that receives said input signal, wherein said third frequency down-conversion module down-converts said input signal according to a third control signal and outputs a third down-converted signal;

a fourth frequency down-conversion module that receives said input signal, wherein said fourth frequency down-conversion module down-converts said input signal according to a fourth control signal and outputs a fourth down-converted signal; and

a second subtractor module that subtracts said fourth down-converted signal from said third down-converted signal and outputs a second channel down-converted signal;

wherein said input signal comprises an I/Q modulated signal;

wherein said first channel down-converted signal comprises an I-phase information signal portion of said I/Q modulated signal, and wherein said second channel down-converted signal comprises a Q-phase information signal portion of said I/Q modulated signal; and

wherein a second control signal pulse of said second control signal occurs 1.5 cycles of a frequency of said input signal after the occurrence of a first control signal pulse of said first control signal;

wherein a fourth control signal pulse of said fourth control signal occurs 1.5 cycles of said frequency of said input signal after the occurrence of a third control signal pulse of said fourth control signal; and

wherein said third control signal pulse occurs 0.75 cycles of said frequency of said input signal after the occurrence of said first control signal pulse.

18. The apparatus of claim **17**, wherein a re-radiated signal comprises attenuated components of said first, second, third, and fourth control signal pulses to form a cumulative frequency, wherein a ratio of said cumulative frequency of said re-radiated signal to said frequency of said input signal is substantially 4:3.

19. An apparatus for down-converting an electromagnetic signal, comprising:

a first frequency down-conversion module that receives an input signal, wherein said first frequency down-conversion module down-converts said input signal according to a first control signal and outputs a first down-converted signal;

a second frequency down-conversion module that receives said input signal, wherein said second frequency down-conversion module down-converts said input signal according to a second control signal and outputs a second down-converted signal;

a subtractor module that subtracts said second down-converted signal from said first down-converted signal and outputs a channel down-converted signal;

a third frequency down-conversion module that receives said input signal, wherein said third frequency down-conversion module down-converts said input signal according to a third control signal and outputs a third down-converted signal;

a fourth frequency down-conversion module that receives said input signal, wherein said fourth frequency down-conversion module down-converts said input signal according to a fourth control signal and outputs a fourth down-converted signal; and

a second subtractor module that subtracts said fourth down-converted signal from said third down-converted signal and outputs a second channel down-converted signal;

wherein said first frequency down-conversion module samples said input signal according to said first control signal, said second frequency down-conversion module samples said input signal according to said second control signal, said third frequency down-conversion module samples said input signal according to said third control signal, and said fourth frequency down-conversion module samples said input signal according to said fourth control signal.

20. The apparatus of claim **19**, wherein said input signal comprises an I/Q modulated signal.

21. The apparatus of claim **19**, wherein said first, said second, said third, and said fourth frequency down-conversion modules each comprise a switch and a storage element, wherein a first node of said switch is coupled to a node of said storage element, and a second node of said switch is coupled to a reference potential.

22. The apparatus of claim **21**, wherein said storage element comprises a capacitor.

23. The apparatus of claim **22**, wherein said capacitor reduces a DC offset voltage at least due to charge injection effects.

24. The apparatus of claim **22**, wherein said capacitor is coupled in series with said input signal.

25. The apparatus of claim **19**, wherein said first, said second, said third, and said fourth frequency down-conversion modules each comprise a switch and a storage element, wherein a first node of said storage element is coupled to a node of said switch, and a second node of said storage element is coupled to a reference potential.

26. An apparatus for down-converting an electromagnetic signal, comprising:

a first frequency down-conversion module that receives an input signal, wherein said first frequency down-conversion module down-converts said input signal according to a first control signal and outputs a first down-converted signal;

a second frequency down-conversion module that receives said input signal, wherein said second frequency down-conversion module down-converts said input signal according to a second control signal and outputs a second down-converted signal;

a subtractor module that subtracts said second down-converted signal from said first down-converted signal and outputs a channel down-converted signal;

a third frequency down-conversion module that receives said input signal, wherein said third frequency down-conversion module down-converts said input signal according to a third control signal and outputs a third down-converted signal;

a fourth frequency down-conversion module that receives said input signal, wherein said fourth frequency down-conversion module down-converts said input signal according to a fourth control signal and outputs a fourth down-converted signal; and

a second subtractor module that subtracts said fourth down-converted signal from said third down-converted signal and outputs a second channel down-converted signal;

wherein said input signal comprises an I/Q modulated signal;

wherein said first channel down-converted signal comprises an I-phase information signal portion of said I/Q modulated signal, and wherein said second channel down-converted signal comprises a Q-phase information signal portion of said I/Q modulated signal; and

wherein said first, said second, said third, and said fourth frequency down-conversion modules each comprise a switch and a storage element, wherein a first node of said switch is coupled to anode of said storage element, and a second node of said switch is coupled to a reference potential.

27. The apparatus of claim **26**, wherein said storage element comprises a capacitor.

28. The apparatus of claim **27**, wherein said capacitor reduces a DC offset voltage at least due to charge injection effects.

29. The apparatus of claim **27**, wherein said capacitor is coupled in series with said input signal.

30. An apparatus for down-converting an electromagnetic signal, comprising:

a first frequency down-conversion module that receives an input signal, wherein said first frequency down-conversion module down-converts said input signal according to a first control signal and outputs a first down-converted signal;

a second frequency down-conversion module that receives said input signal, wherein said second frequency down-conversion module down-converts said input signal according to a second control signal and outputs a second down-converted signal;

a subtractor module that subtracts said second down-converted signal from said first down-converted signal and outputs a channel down-converted signal;

a third frequency down-conversion module that receives said input signal, wherein said third frequency down-conversion module down-converts said input signal according to a third control signal and outputs a third down-converted signal;

a fourth frequency down-conversion module that receives said input signal, wherein said fourth frequency down-conversion module down-converts said input signal according to a fourth control signal and outputs a fourth down-converted signal;

a second subtractor module that subtracts said fourth down-converted signal from said third down-converted signal and outputs a second channel down-converted signal; and

a control signal generator, wherein said control signal generator comprises:

a local oscillator;

a 180 degree phase shifter coupled to an output of said local oscillator;

a first divide-by-two module coupled to said output of said local oscillator;

a second divide-by-two module coupled to an output of said 180 degree phase shifter;

a first pulse generator coupled to an output of said first divide-by-two module, wherein said first pulse generator outputs said first control signal;

a second pulse generator coupled to an inverting output of said first divide-by-two module, wherein said second pulse generator outputs said second control signal;

a third pulse generator coupled to an output of said second divide-by-two module, wherein said third pulse generator outputs said third control signal; and

a fourth pulse generator coupled to an inverting output of said second divide-by-two module, wherein said fourth pulse generator outputs said fourth control signal.

31. A method of down-converting an electromagnetic signal, comprising the steps of:

(1) receiving an input signal;

(2) frequency down-converting the input signal with a first frequency down-conversion module to a first down-converted signal;

(3) frequency down-converting the input signal with a second frequency down-conversion module to a second down-converted signal; and

(4) subtracting the second down-converted signal from the first down-converted signal to form an output signal;

wherein step (2) comprises the step of:

sampling the input signal according to a first control signal; and

wherein step (3) comprises the step of:

sampling the input signal according to a second control signal;

wherein the first control signal comprises a first pulse, and wherein the second control signal comprises a second pulse; and

wherein the second pulse is delayed relative to the first pulse by 0.5+n cycles of the input signal, wherein n is an integer.

32. The method of claim **31**, further comprising the step of:

(5) amplifying the output signal.

33. The method of claim **32**, further comprising the step of:

(6) differentially amplifying the first and second down-converted signals, wherein step (6) comprises steps (4) and (5).

34. The method of claim **31**, further comprising the step of:

(5) filtering the first down-converted signal and the second down-converted signal.

35. The method of claim **31**, further comprising

(5) frequency down-converting the input signal with a third universal frequency down-conversion module to a third down-converted signal;

(6) frequency down-converting the input signal with a fourth universal frequency down-conversion module to a fourth down-converted signal; and

(7) subtracting the fourth down-converted signal from the third down-converted signal to form a second output signal.

36. The method of claim **31**, wherein the first and second frequency down-conversion modules each comprise a capacitor in series with the input signal,

wherein step (2) further comprises the step of:

(B) reducing a first DC offset voltage in the first down-converted signal using the capacitor of the first frequency down-conversion module;

wherein step (3) further comprises the step of:

(B) reducing a second DC offset voltage in the second down-converted signal using the capacitor of the second frequency down-conversion module;

wherein the first and second DC offset voltages are due at least to charge injection effects in the first and second frequency down-conversion modules, respectively, from interaction with the first and second control signals, respectively.

37. A method of down-converting an electromagnetic signal, comprising the steps of:

(1) receiving an input signal;

(2) frequency down-converting the input signal with a first frequency down-conversion module to a first down-converted signal;

(3) frequency down-converting the input signal with a second frequency down-conversion module to a second down-converted signal;

(4) subtracting the second down-converted signal from the first down-converted signal to form an output signal;

(5) frequency down-converting the input signal with a third frequency down-conversion module to a third down-converted signal;

(6) frequency down-converting the input signal with a fourth frequency down-conversion module to a fourth down-converted signal; and

(7) subtracting the fourth down-converted signal from the third down-converted signal to form a second output signal;

wherein step (2) comprises the step of:

(A) sampling the input signal according to a first control signal;

wherein step (3) comprises the step of:

(A) sampling the input signal according to a second control signal;

wherein step (5) comprises the step of:

(A) sampling the input signal according to a third control signal; and

wherein step (6) comprises the step of:

(A) sampling the input signal according to a fourth control signal.

38. The method of claim **37**,

wherein step (2)(A) comprises the step of:

(i) generating the first control signal;

wherein step (3)(A) comprises the step of:

(i) generating the second control signal, wherein the second control signal is a phase-shifted version of the first control signal;

wherein step (5)(A) comprises the step of:

(i) generating the third control signal, wherein the third control signal is a phase-shifted version of the first control signal; and

wherein step (6)(A) comprises the step of:

(i) generating the fourth control signal, wherein the fourth control signal is a phase-shifted version of the first control signal.

39. The method of claim **37**, wherein the first control signal comprises a first control signal pulse, the second control signal comprises a second control signal pulse, the third control signal comprises a third control signal pulse,

and the fourth control signal comprises a fourth control signal pulse, and wherein the method comprises further comprises the step of:

(8) re-radiating a signal that comprises attenuated components of the first, second, third, and fourth control signal pulses, wherein the attenuated components of the first, second, third, and fourth control signal pulses form a cumulative frequency; and

(9) configuring the first, second, third, and fourth control signal pulses such that the cumulative frequency is greater than a frequency of the input signal.

40. The method of claim **37**,

wherein step (4) comprises the step of:

(A) canceling a first DC offset voltage in the first down-converted signal and a second DC offset voltage in the second down-converted signal; and

wherein step (7) comprises the step of:

(A) canceling a third DC offset voltage in the third down-converted signal and a fourth DC offset voltage in the fourth down-converted signal.

41. The method of claim **40**, wherein the first, second, third, and fourth DC offset voltages are at least generated by the first, second, third, and fourth frequency down-conversion modules, respectively.

42. The method of claim **37**, wherein the first, second, third, and fourth frequency down-conversion modules each comprise a capacitor in series with the input signal,

wherein step (2) further comprises the step of:

(B) reducing a first DC offset voltage in the first down-converted signal with the capacitor of first frequency down-conversion module;

wherein step (3) further comprises the step of:

(B) reducing a second DC offset voltage in the second down-converted signal with the capacitor of second frequency down-conversion module;

wherein step (5) further comprises the step of:

(B) reducing a third DC offset voltage in the third down-converted signal with the capacitor of third frequency down-conversion module; and

wherein step (6) further comprises the step of:

(B) reducing a fourth DC offset voltage in the fourth down-converted signal with the capacitor of fourth frequency down-conversion module;

wherein the first, second, third, and fourth DC offset voltages are at least due to charge injection effects in the first, second, third, and fourth frequency down-conversion modules, respectively, from interaction with the first, second, third, and fourth control signals, respectively.

43. A method of down-converting an electromagnetic signal, comprising the steps of:

(1) receiving an input signal;

(2) frequency down-converting the input signal with a first frequency down-conversion module to a first down-converted signal;

(3) frequency down-converting the input signal with a second frequency down-conversion module to a second down-converted signal;

(4) subtracting the second down-converted signal from the first down-converted signal to form an output signal;

(5) frequency down-converting the input signal with a third frequency down-conversion module to a third down-converted signal;

(6) frequency down-converting the input signal with a fourth frequency down-conversion module to a fourth down-converted signal; and

(7) subtracting the fourth down-converted signal from the third down-converted signal to form a second output signal;

wherein the input signal comprises an I/Q modulated signal, and

wherein step (2) comprises the step of:

(A) frequency down-converting the input signal to a non-inverted I-phase signal portion of the I/Q modulated signal;

wherein step (3) comprises the step of:

(A) frequency down-converting the input signal to an inverted Q-phase signal portion of the I/Q modulated signal.

wherein step (5) comprises the step of:

(A) frequency down-converting the input signal to a non-inverted Q-phase signal portion of the I/Q modulated signal; and

wherein step (6) comprises the step of:

(A) frequency down-converting the input signal to an inverted I-phase signal portion of the I/Q modulated signal.

44. The method of claim **43**,

wherein step (2)(A) comprises the step of:

(i) under-sampling a first phase of the in-phase signal portion of the I/Q modulated signal;

wherein step (3)(A) comprises the step of:

(i) under-sampling a second phase of the in-phase signal portion of the I/Q modulated signal, wherein the second phase of the in-phase signal portion is of an opposite phase to the first phase of the in-phase signal portion;

wherein step (5)(A) comprises the step of:

(i) under-sampling a third phase of the quadrature-phase signal portion of the I/Q modulated signal; and

wherein step (6)(A) comprises the step of:

(i) under-sampling a fourth phase of the quadrature-phase signal portion of the I/Q modulated signal, wherein the fourth phase of the quadrature-phase signal portion is of an opposite phase to the third phase of the quadrature-phase signal portion.

45. The method of claim **44**,

wherein step (3)(A)(i) comprises the step of:

(a) under-sampling the I/Q modulated signal 1.5 cycles of a frequency of the I/Q modulated signal after under-sampling the I/Q modulated signal in step (2)(A)(i);

wherein step (5)(A)(i) comprises the step of:

(a) under-sampling the I/Q modulated signal 0.75 cycles of the frequency of the I/Q modulated signal after under-sampling of the I/Q modulated signal occurs in step (2)(A)(i); and

wherein step (6)(A)(i) comprises the step of:

(a) under-sampling the I/Q modulated signal 1.5 cycles of the frequency of the I/Q modulated signal after under-sampling of the I/Q modulated signal occurs in step (5)(A)(i).

46. The method of claim **45**, wherein step (2)(A) further comprises the step of:

(ii) under-sampling the I/Q modulated signal 3.0 cycles of the frequency of the I/Q modulated signal after a previous under-sample of the I/Q modulated signal.

47. The method of claim **43**, wherein the first, second, third, and fourth frequency down-conversion modules each comprise a capacitor in series with the input signal,

wherein step (2) further comprises the step of:

(B) reducing a first DC offset voltage in the first down-converted signal using the capacitor of the first frequency down-conversion module;

wherein step (3) further comprises the step of:

(B) reducing a second DC offset voltage in the second down-converted signal using the capacitor of the second frequency down-conversion module;

wherein step (5) further comprises the step of:

(B) reducing a third DC offset voltage in the third down-converted signal using the capacitor of the third frequency down-conversion module; and

wherein step (6) further comprises the step of:

(B) reducing a fourth DC offset voltage in the fourth down-converted signal using the capacitor of the fourth frequency down-conversion module;

wherein the first, second, third, and fourth DC offset voltages are due to at least charge injection effects in the first, second, third, and fourth frequency down-conversion modules, respectively, from interaction with the first, second, third, and fourth control signals, respectively.

* * * * *

UNITED STATES PATENT AND TRADEMARK OFFICE

CERTIFICATE OF CORRECTION

PATENT NO. : 6,879,817 B1
DATED : April 12, 2005
INVENTOR(S) : Sorrells et al.

It is certified that error appears in the above-identified patent and that said Letters Patent is hereby corrected as shown below:

Title page,
Item [56], **References Cited**, U.S. PATENT DOCUMENTS, please insert the following citations:

--U.S. Pat. No. 4,132,952;
U.S. Pat. No. 5,260,973;
U.S. Pat. No. 6,307,894 B2;
U.S. Pat. No. 4,441,080;
U.S. Pat. No. 4,873,492;
U.S. Pat. No. 5,697,074;
U.S. Pat. No. 5,784,689;
U.S. Pat. No. 6,335,656 B1;
U.S. Pat. No. 6,690,232 B2;
U.S. Pat. No. 5,636,140;
U.S. Pat. No. 6,366,622 B1;
U.S. Pat. No. 6,600,795 B1;
U.S. Pat. No. 4,250,458;
U.S. Pat. No. 5,760,629;
U.S. Pat. No. 6,084,465;
U.S. Pat. No. 6,204,789 B1;
U.S. Pat. No. 6,064,054;
U.S. Pat. No. 5,218,562;
U.S. Pat. No. 5,239,496;
U.S. Pat. No. 5,896,304;
U.S. Pat. No. 6,005,903;
U.S. Pat. No. 5,834,979--.

OTHER PUBLICATIONS, please insert the citation for
-- Deboo, Gordon J., *Integrated Circuits and Semiconductor Devices*, 2nd Edition, McGraw-Hill, Inc., pp. 41-45 (1977). --.
"Copy of Declaration of Alex Holts…" reference, please replace "Holts" with -- Holtz --.
"Liecht, C.A.," reference, please replace "Liecht" with -- Liechti --.
"Pässinen et al.," reference, please replace "Pässinen" with -- Pärssinen --.

Column 14,
Line 26, please replace "901 MHz" with -- 900 MHz --.

UNITED STATES PATENT AND TRADEMARK OFFICE

CERTIFICATE OF CORRECTION

PATENT NO. : 6,879,817 B1
DATED : April 12, 2005
INVENTOR(S) : Sorrells et al.

It is certified that error appears in the above-identified patent and that said Letters Patent is hereby corrected as shown below:

Column 39,
Lines 65-67, please replace the entire equation with

$$R'(t)k_{BB}\left[\left(r(t-t_{BB})C(t')+Z(t-t_{BB})\right)k_{LNA}+X(t-t_{BB})\right]$$
$$C_{PN}(t)+\left(<\left|\tilde{C}(t-t_{BB})\right|>k_{c\lambda}k_{BB}\right)C_{PN}(t')$$

-- Eq. 31--.

Column 40,
Lines 2-4, please replace the entire equation with

$$Z(t)=\left(k_1k_AC(t'_{1A})+k_2k_BC_B(t'_{2B})\right)C(t)$$
$$X(t)=\left(k_AC(t'_A)+k_BC_B(t'_B)\right)C(t)$$
$$t'_X\triangleq(t-t_X)$$
$$C(t)\simeq C_A(t')$$

-- Eq. 32--.

Column 43,
Lines 10-12, please replace "≈ (" with -- ≈ -(--.

Column 47,
Line 58, please replace "≦" with -- ≤ --.

Column 85,
Line 67, please replace "a channel" with -- a first channel --.

Column 86,
Lines 21 and 23, please delete "universal".
Line 30, please replace "of claim **2**" with -- of claim **1** --.
Line 30, please replace "said channel" with -- said first and second channel --.
Line 31, please replace "signal is a baseband signal" with -- signals are baseband signals --.
Line 32, please replace "said channel" with -- said first and second channel --.
Line 33, please replace "signal is an intermediate frequency signal" with -- signals are intermediate frequency signals --.
Line 42, please replace "comprise" with -- comprises --.

UNITED STATES PATENT AND TRADEMARK OFFICE

CERTIFICATE OF CORRECTION

PATENT NO. : 6,879,817 B1
DATED : April 12, 2005
INVENTOR(S) : Sorrells et al.

It is certified that error appears in the above-identified patent and that said Letters Patent is hereby corrected as shown below:

Column 87,
Line 35, please replace “a channel” with -- a first channel --.
Line 59, please replace “comprise” with -- comprises --.
Line 61, please replace “anode” with -- a node --.

Column 88,
Lines 13 and 67, please replace “a channel” with -- a first channel --.

Column 89,
Line 60, please replace “a channel” with -- a first channel --.

Column 90,
Line 17, please replace “comprise” with -- comprises --.
Line 43, please replace “a channel” with -- a first channel --.

Column 91,
Lines 56 and 59, please delete “universal”.

Column 92,
Line 24, please replace “an output” with -- a first output --.

Column 93,
Line 2, please delete “comprises”.
Line 29, please delete “of first” with -- of the first --.
Line 33, please replace “of second” with -- of the second --.
Line 37, please replace “of third” with -- of the third --.
Line 41, please replace “of fourth” with -- of the fourth --.
Line 60, please replace “form an output” with -- form a first output --.

UNITED STATES PATENT AND TRADEMARK OFFICE

CERTIFICATE OF CORRECTION

PATENT NO. : 6,879,817 B1
DATED : April 12, 2005
INVENTOR(S) : Sorrells et al.

It is certified that error appears in the above-identified patent and that said Letters Patent is hereby corrected as shown below:

Column 94,
Line 15, please replace “signal.” with signal; --.

Signed and Sealed this

First Day of November, 2005

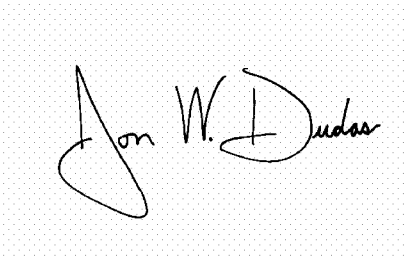

JON W. DUDAS
Director of the United States Patent and Trademark Office