IN THE UNITED STATES DISTRICT COURT
FOR THE WESTERN DISTRICT OF TEXAS
WACO DIVISION

PARKERVISION, INC., *Plaintiff*	§	
	§	**6:23-CV-00389-ADA**
-v-	§	
NXP BV, NXP SEMICONDUCTORS NV, NXP USA, INC. F/K/A NXP SEMICONDUCTORS USA, INC., *Defendants*	§	

SPECIAL MASTER'S REPORT AND RECOMMENDATION REGARDING CLAIM CONSTRUCTION

Before the Court are the Parties' claim construction briefs: Defendants NXP BV, NXP Semiconductors NV, NXP USA Inc. f/k/a NXP Semiconductors USA, Inc.'s Opening and Reply briefs (ECF Nos. 34 and 36, respectively) and Plaintiff ParkerVision Inc.'s Response and Sur-Reply briefs (ECF Nos. 35 and 37, respectively). United States District Judge Alan D Albright referred these cases to the undersigned on February 5, 2024. ECF No. 33. The undersigned provided preliminary constructions for the disputed terms one day before the hearing. The undersigned held the *Markman* hearing on June 14, 2024. During that hearing, the undersigned informed the Parties of the recommended constructions for most of the disputed terms. *Id.* This Report and Recommendation does not alter any of those constructions.

I. DESCRIPTION OF THE ASSERTED PATENTS

Plaintiff asserts U.S. Patent Nos. 7,483,686, 7,865,177, and 9,118,528. The Asserted Patents are directed towards down-conversion of radio-frequency (RF) signals. Opening at 1, Response at 1.

ParkerVision Exhibit 2008
MediaTek v. ParkerVision - IPR2024-00796

The undersigned previously construed terms from U.S. Patent No. 6,266,518, which appears to be related to the Asserted Patents and is also directed towards down-conversion. The undersigned incorporates the Description of the Asserted Patents from that order, which is reproduced below.[1]

The Asserted Patents describe and claim systems for down-conversion of a modulated carrier signal. '518 Patent at Abstract. Down-conversion is the process of recovering the baseband (audio) signal from the carrier signal after it has been transmitted to and received by the receiver. This process is referred to as "down-conversion" because a high frequency signal is being down-converted to a low frequency signal.

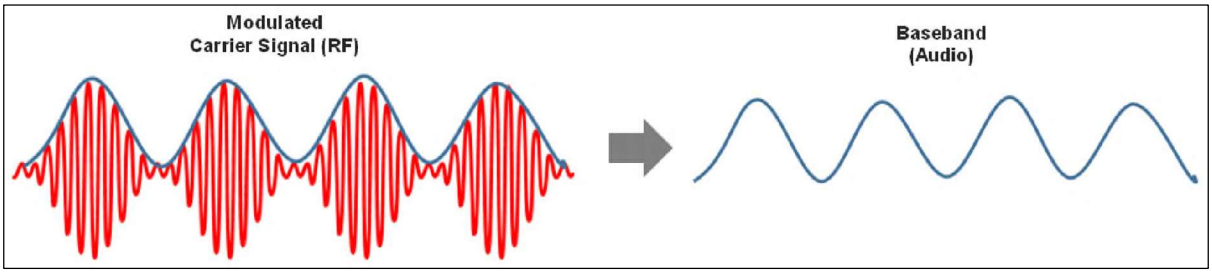

The Asserted Patents disclose at least two types of systems for down-conversion: (1) sample-and-hold (*i.e.*, voltage sampling) and (2) "energy transfer" (also known as "energy sampling"). The key difference between the two is that the former takes a small "sample" of the input signal while the latter takes a very large sample, *i.e.*, a large enough sample that a non-negligible amount of energy is transferred from the input signal. The following sub-sections describe each type of system, their respective operation, and compares them.

[1] It is worth noting that Plaintiff appears to agree that the description of the Asserted Patents is very similar to the asserted patents in prior case. Response at 1 n.1. As such, Plaintiff did not "repeat its discussion of the technology[.]" *Id.*

A. Circuit configuration of down-sampling systems: sample-and-hold and energy transfer.

Figure 78B depicts an exemplary sample-and-hold system, while Figure 82B depicts an exemplary energy transfer system. '518 Patent at 63:19–26 (sample-and-hold) and 7:63–64 (energy transfer).

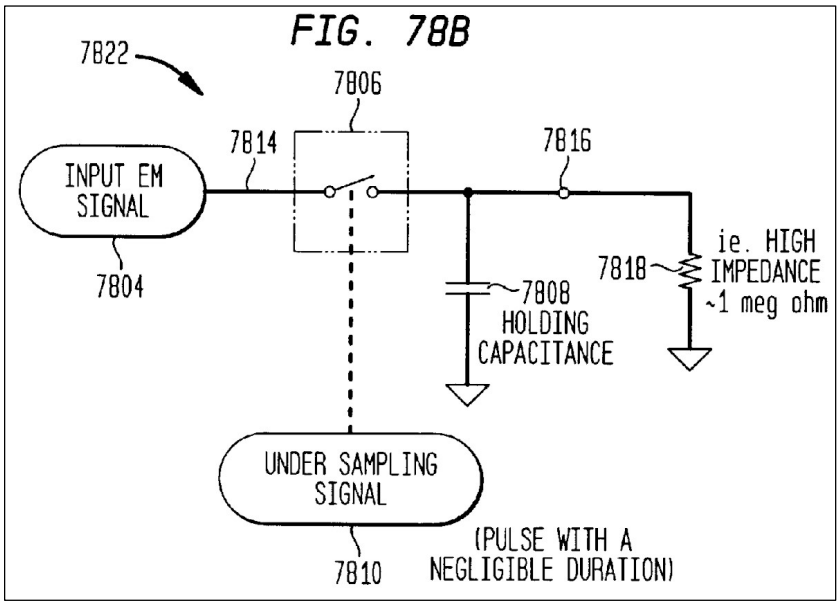

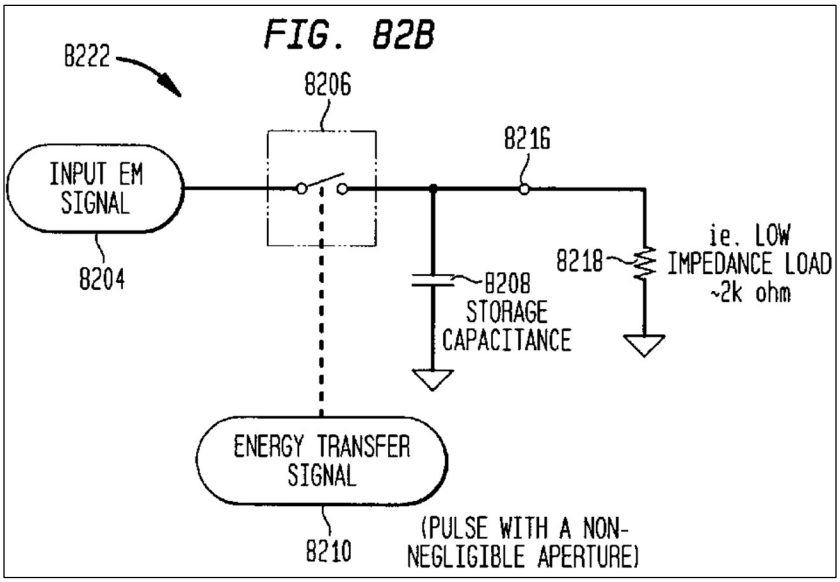

While Figures 78B and 82B depict that the respective circuits have a similar structure, their respective parameter values (*e.g.*, capacitor and load impedance values)—and concomitantly their

respective operation—are very different. It is important to note that the input signal, input EM signal, is the same in both figures.

The circuits in both figures include a switching module (7806 in Figure 78B and 8206 in Figure 82B). *Id.* at 62:65–66 (switching module 7806), 66:13–14 (switching module 8206). The switching module opens and closes (*i.e.*, turns off and on, respectively) based on under-sampling signal 7810 in Figure 78B and energy transfer signal 8210 in Figure 82B. *Id.* at 62:67–63:1 (under-sampling signal 7810), 66:24–26 (energy transfer signal 8210). When the switching module is "closed," input EM signal 7804 and input EM signal 8204 can propagate across the switching module to holding capacitance 7808 and storage capacitance 8208, respectively, but when the switching module is "open," input EM signals 7804/8204 cannot propagate across the switching module. While both switching module 7806 and switching module 8206 open and close, the duration that each module is closed differs significantly. The specifications of the Asserted Patents describe that under-sampling signal 7810 "includes a train of pulses having negligible apertures that tend towards zero time in duration." *Id.* at 63:1–3. The specification discloses an embodiment of the "negligible pulse width" as being "in the range of 1–10 p[ico]sec[onds] ("ps") for under-sampling a 900 MHz signal." *Id.* at 63:3–5. By contrast, the specifications describe that energy transfer signal 8210 "includes a train of energy transfer pulses having <u>non-negligible</u> pulse widths that tend away from zero time in duration." *Id.* at 66:26–28 (emphasis added). The specification discloses an embodiment where the "non-negligible pulse" is approximately 550 ps for a 900 MHz signal.

The specifications describe that holding capacitance 7808 and storage capacitance 8208 are capacitors that charge when switching module 7804 and switching module 8204, respectively, are closed. *Id.* at 63:10–13 (holding capacitance 7808), 66:38–42 (storage capacitance 8208). The

specifications also disclose that holding capacitance 7808 "preferably has a small capacitance value" and disclose an embodiment wherein holding capacitance 7808 has a value of 1 picoFarad ("pF"). *Id.* at 63:9–15. By contrast, the specifications disclose that storage capacitance 8208 "preferably has the capacity to handle the power being transferred" and disclose an embodiment wherein storage capacitance 8208 has a value "in the range of 18 pF." *Id.* at 66:38–49.

The specifications describe that holding capacitance 7808 and storage capacitance 8208 discharge through load 7812 and load 8212 when switching module 7804 and switching module 8204, respectively, are open. *See id.* at 63:19–26 (load 7812), 66:61–65 (load 8212). Figure 78B depicts that "high impedance" load 7818 has an impedance of approximately 1 MΩ while Figure 82B depicts that "low impedance" load 8218 has an impedance of approximately 2 kΩ. The specifications describe that "[a] high impedance load is one that is relatively insignificant to an output drive impedance of the system for a given output frequency. A low impedance load is one that is relatively significant." *Id.* at 66:58–61.

B. Operation of down-converting systems

At a very high level, both systems operate similarly. In particular, when the switching module (switching modules 7806 / 8206) is closed, the input signal (input EM signal 7804 / 8204) propagates to the capacitor (holding capacitance 7808 and storage capacitance 8208) and charge the voltage across the capacitor to the voltage of input signal. But when the switching module is open, the input signal cannot propagate to the capacitor, *i.e.*, cannot charge the voltage across the capacitor to the voltage of input signal. Rather, the charge on the capacitor discharges through the load impedance (load 7818 / 8218).

While both systems operate similarly at a high level, differences in (1) the width of the sampling aperture, (2) value of the capacitor, and (3) value of the load are what dictates whether the system operates as a sample-and-hold system or an energy transfer system.

1. Operation of sample-and-hold system

In a sample-and-hold system, the sampling aperture in under-sampling signal 7810 is negligible which means only a small amount of charge from input EM signal 7804 propagates to the holding capacitance 7808 before switching module 7806 opens. *Id.* at 62:63–63:8. Because the sampling aperture has a negligible (*i.e.*, very small) width, there is only enough time take a "sample" of input EM signal 7804, *i.e.*, only a small amount of charge is transferred to holding capacitor 7808. Given that only a small amount of charge is transferred to the capacitor, the value of holding capacitor 7808 needs to be relatively low in order for the voltage across holding capacitance 7808 to change to the voltage of input EM signal 7804. More specifically, the relationship between charge (Q) and voltage (V) across a capacitor (with a capacitance of C) is $Q = C * V$, or $Q / C = V$. As such, if the capacitance C is large, more charge Q is needed in order to increase the voltage to V. For example, for the same amount of charge, if the capacitance is 2C in one case and C in other case, the voltage in the former case will be half the voltage of the voltage in the latter case. *Id.* at 65:29–35. Therefore, to ensure that the value of holding capacitance 7808 does not limit the voltage across the capacitor, the value of holding capacitance 7808 needs to be, as described above, low. *Id.* at 63:9–15.

When sampling module 7806 is open, the charge on holding capacitance 7808 discharges through load impedance 7818. *See id.* at 63:19–26. When the value of load impedance 7818 is high, the charge on holding capacitance 7808 discharges very slowly as compared to when the load impedance is low. More specifically, the time to discharge a capacitor is related to $R * C$

(also known as the time constant τ) where R is the value of the load impedance. Using the exemplary values depicted in Figures 78B (1 MΩ) and 82B (2 kΩ), assuming that the capacitance is the same, it will take 500 times longer to discharge the capacitor with the 1 MΩ load impedance as compared to the circuit with the 2 kΩ load impedance. Because it takes significantly longer to discharge the capacitor using a 1 MΩ load impedance (as compared to the 2 kΩ load impedance), the 1 MΩ load impedance in "holds" the charge.

To summarize, in a sample-and-hold down-sampling system, a negligible sampling aperture for switching module 7806 and a small value for holding capacitance 7808 only allows for a "sample" of the voltage of the input EM signal 7804 when switching module 7806 is closed. And because of the high value of load impedance 7818, the capacitor "holds" that value when switching module 7806 is open.

2. Operation of energy transfer system

As described above, in an energy transfer system, the sampling aperture is non-negligible (*e.g.*, 550 ps versus 1 ps for the sample-and-hold system for a 900 MHz input signal). Therefore, there is significantly more time to transfer charge from the input signal to storage capacitance 8208. *Id.* at 66:42–44. Because significantly more charge is transferred to the capacitor, the value of storage capacitance 8208 can be larger, in spite of the fact that charge and voltage are inversely related (*i.e.*, $V = {}^{Q}/_{C}$). The fact that this system transfers a large amount of charge—or energy—to the capacitor gives rise to the name "energy transfer" system.

When sampling module 8206 is open, the charge on storage capacitance 8208 discharges through load impedance 8218. *See id.* at 66:61–65. Because the load impedance in an energy transfer system is "low," *e.g.*, 2 kΩ, the charge on storage capacitance 8208 discharges much faster

than the charge on a capacitor in a sample-and-hold system, *e.g.*, 500 times faster as compared to using a 1 MΩ load impedance.

To summarize, in an energy transfer down-sampling system, a non-negligible sampling aperture for switching module 8206 and a high value for storage capacitance 8208 allows for a large amount of charge—or energy—to be transferred from the input signal.

C. Comparison of sample-and-hold and energy transfer systems

The following summarizes the key differences between sample-and-hold and energy transfer systems.

Parameter	Sample-and-hold	Energy transfer
Sampling aperture	Negligible (*e.g.*, 1–10 ps)	Non-negligible (*e.g.*, 550 ps)
Capacitor	Holding capacitance (*e.g.*, 1 pF)	Storage capacitance (*e.g.*, 18 pF)
Load impedance	High (*e.g.*, ~1 MΩ)	Low (*e.g.*, ~2 kΩ)

It is important to emphasize that differences in the set of parameter values determines whether a system functions as a sample-and-hold system or an energy transfer system. For example, there is nothing special in the structure of a holding capacitance as compared to the structure of a storage capacitance. A circuit designer could, in theory, swap the holding capacitance in a sample-and-hold system with the storage capacitance in an energy transfer system and still have a sample-and-hold system by appropriately adjusting the sampling aperture and load impedance to "match" the larger capacitor value of the holding capacitance.

It is important to note that changing one parameter without adjusting the other parameters will prevent each system from operating as intended or will have other problems. For example, using a non-negligible sampling aperture in a sample-and-hold system is unnecessary as the holding capacitance can be fully charged (to the voltage of the input signal) with a negligible

aperture, but using a non-negligible sampling aperture may distort or destroy the input EM signal by transferring too much of its energy to the holding capacitance. *Id.* at 62:30–39.

Even worse, using a high load impedance in an energy transfer system or a low load impedance in a sample-and-hold system could result in a system with poor performance. *See, e.g.*, *id.* at 65:52–55. More specifically, in the latter situation, the low value of the holding capacitance combined with a low load impedance means that its corresponding time constant τ is very low, which means that the holding capacitance may discharge significantly when the switching module is open. As a result, the down-converted signal "cannot provide optimal voltage reproduction, and has relatively negligible power available at the output." *Id.* at 64:49–51.

In the former situation, the high value of the storage capacitance combined with a high load impedance means that its corresponding time constant τ is very high, therefore it will take considerably more time (as compared to a low load impedance) to discharge the storage capacitance. This may result in less than optimal voltage reproduction, *e.g.*, when the voltage of the input EM signal is lower than the voltage across the capacitor. Furthermore, the down-converted signal could have substantially less power (*e.g.*: V^2/R; ~2 mV and 1 MΩ) than the energy transfer system with a low impedance load (*e.g.*: V^2/R; ~2 mV and 2 kΩ) or even the sample-and-hold system with a high impedance load (*e.g.*: V^2/R; ~5 mV and 1 MΩ). *See id.* at 67:28–33.

II. LEGAL STANDARD

A. General principles

The general rule is that claim terms are generally given their plain-and-ordinary meaning. *Phillips v. AWH Corp.*, 415 F.3d 1303, 1312 (Fed. Cir. 2005) (*en banc*); *Azure Networks, LLC v.*

CSR PLC, 771 F.3d 1336, 1347 (Fed. Cir. 2014), *vacated on other grounds*, 575 U.S. 959, 959 (2015) ("There is a heavy presumption that claim terms carry their accustomed meaning in the relevant community at the relevant time.") (internal quotation omitted). The plain-and-ordinary meaning of a term is the "meaning that the term would have to a person of ordinary skill in the art in question at the time of the invention." *Phillips*, 415 F.3d at 1313.

The "only two exceptions to [the] general rule" that claim terms are construed according to their plain-and-ordinary meaning are when the patentee (1) acts as his/her own lexicographer or (2) disavows the full scope of the claim term either in the specification or during prosecution. *Thorner v. Sony Computer Ent. Am. LLC*, 669 F.3d 1362, 1365 (Fed. Cir. 2012). The Federal Circuit has counseled that "[t]he standards for finding lexicography and disavowal are exacting." *Hill-Rom Servs., Inc. v. Stryker Corp.*, 755 F.3d 1367, 1371 (Fed. Cir. 2014). To act as his/her own lexicographer, the patentee must "clearly set forth a definition of the disputed claim term" and "'clearly express an intent' to [define] the term." *Thorner,* 669 F.3d at 1365.

"Like the specification, the prosecution history provides evidence of how the PTO and the inventor understood the patent." *Phillips*, 415 F.3d at 1317. "[D]istinguishing the claimed invention over the prior art, an applicant is indicating what a claim does not cover." *Spectrum Int'l, Inc. v. Sterilite Corp.*, 164 F.3d 1372, 1379 (Fed. Cir. 1998). The doctrine of prosecution disclaimer precludes a patentee from recapturing a specific meaning that was previously disclaimed during prosecution. *Omega Eng'g, Inc. v. Raytek Corp.*, 334 F.3d 1314, 1323 (Fed. Cir. 2003). "[F]or prosecution disclaimer to attach, our precedent requires that the alleged disavowing actions or statements made during prosecution be both clear and unmistakable." *Id.* at 1325–26. Accordingly, when "an applicant's statements are amenable to multiple reasonable

interpretations, they cannot be deemed clear and unmistakable." *3M Innovative Props. Co. v. Tredegar Corp.*, 725 F.3d 1315, 1326 (Fed. Cir. 2013).

A construction of "plain and ordinary meaning" may be inadequate when a term has more than one "ordinary" meaning or when reliance on a term's "ordinary" meaning does not resolve the parties' dispute. *O2 Micro Int'l Ltd. v. Beyond Innovation Tech. Co*., 521 F.3d 1351, 1361 (Fed. Cir. 2008). In that case, the Court must describe what the plain-and-ordinary meaning is. *Id.*

"Although the specification may aid the court in interpreting the meaning of disputed claim language . . ., particular embodiments and examples appearing in the specification will not generally be read into the claims." *Constant v. Advanced Micro-Devices, Inc.*, 848 F.2d 1560, 1571 (Fed. Cir. 1988). "[I]t is improper to read limitations from a preferred embodiment described in the specification—even if it is the only embodiment—into the claims absent a clear indication in the intrinsic record that the patentee intended the claims to be so limited." *Liebel-Flarsheim Co. v. Medrad, Inc.*, 358 F.3d 898, 913 (Fed. Cir. 2004).

Although extrinsic evidence can be useful, it is "less significant than the intrinsic record in determining 'the legally operative meaning of claim language.'" *Phillips*, 415 F.3d at 1317 (quoting *C.R. Bard, Inc. v. U.S. Surgical Corp.*, 388 F.3d 858, 862 (Fed. Cir. 2004)). Technical dictionaries may be helpful, but they may also provide definitions that are too broad or not indicative of how the term is used in the patent. *Id.* at 1318. Expert testimony may also be helpful, but an expert's conclusory or unsupported assertions as to the meaning of a term are not. *Id.*

B. Claim differentiation

Under the doctrine of claim differentiation, a court presumes that each claim in a patent has a different scope. *Phillips*, 415 F.3d at 1314–15. The presumption is rebutted when, for

example, the "construction of an independent claim leads to a clear conclusion inconsistent with a dependent claim." *Id.* The presumption is also rebutted when there is a "contrary construction dictated by the written description or prosecution history." *Seachange Int'l., Inc. v. C-COR, Inc.*, 413 F.3d 1361, 1369 (Fed. Cir. 2005). The presumption does not apply if it serves to broaden the claims beyond their meaning in light of the specification. *Intellectual Ventures I LLC v. Motorola Mobility LLC*, 870 F.3d 1320, 1326 (Fed. Cir. 2017).

III. LEGAL ANALYSIS

A. Term #1: "storage module" / "energy storage element"

Term	Plaintiff's Proposed Construction	Defendants' Proposed Construction
#1: "storage module" / "energy storage element" U.S. Patent No. 7,483,686, Claim 11; U.S. Patent No. 9,118,528, Claims 1, 5, 8, 17, 18, 19, 23, 26, 35, 36 Proposed by Both Sides	**Storage module**: "a module of an energy transfer system that stores non-negligible amounts of energy from an input electromagnetic signal" **Energy storage element**: "an element of an energy transfer system that stores non-negligible amounts of energy from an input electromagnetic signal"	"an element of a system that stores non-negligible amounts of energy from an input electromagnetic signal."

Judge Albright, the undersigned, and Judge Gilliland all previously construed this term as "an element of an energy transfer system that stores non-negligible amounts of energy from an input electromagnetic signal," which is Plaintiff's proposed construction. *ParkerVision, Inc. v. Intel Corp.*, No. 6:20-cv-00108, ECF No. 75 at 4 (W.D. Tex. Jan. 28, 2021); *ParkerVision, Inc. v. Intel Corp.*, No. 6:20-cv-00562, ECF No. 75 at 2 (W.D. Tex. Oct. 22, 2021); *ParkerVision, Inc. v.*

HiSense Co., Ltd., No. 6:20-cv-00870, ECF No. 51 at 5 (W.D. Tex. Oct. 29, 2021); *ParkerVision, Inc. v. LG Elecs.*, No. 6:21-cv-00520, ECF No. 55 at 28 (W.D. Tex. June 21, 2022).

The Federal Circuit subsequently construed "storage element" to mean "an element that stores nonnegligible amounts of energy from an input electromagnetic signal," which is Defendants' proposed construction. *ParkerVision, Inc. v. Vidal*, 88 F.4th 969, 977 (Fed. Cir. 2023).

<u>The Parties' Positions:</u>

Defendants contend that Federal Circuit has construed the same term as described by Defendants' proposed construction, so Plaintiff is estopped from arguing for a different construction. Opening at 9. More specifically, Defendants contend that the Federal Circuit held that "the patentee acted as his own lexicographer in the critical paragraph of U.S. Patent No. 6,061,551 ("the '551 patent"), which was incorporated by reference into the '444 patent."

> [1.] FIG. 82A illustrates an exemplary energy transfer system 8202 for down-converting an input EM signal 8204. [2.] The energy transfer system 8202 includes a switching module 8206 and a storage module illustrated as a storage capacitance 8208. [3.] The terms storage module and storage capacitance, as used herein, are distinguishable from the terms holding module and holding capacitance, respectively. [4.] Holding modules and holding capacitances, as used above, identify systems that store negligible amounts of energy from an under-sampled input EM signal with the intent of "holding" a voltage value. [5.] *Storage modules and storage capacitances, on the other hand, refer to systems that store non-negligible amounts of energy from an input EM signal*.

Id. at 10 (citing '551 Patent at 66:55–67) (emphasis and numbering in original). Defendants contend that the Federal Circuit held that "[t]he critical paragraph clearly expresses an intent to define the term 'storage element' in sentence 5. Sentence 3 uses the phrase 'as used herein' to indicate that the descriptions in sentences 4 and 5 that follow are applicable to the '551 patent as a whole rather than to a specific embodiment." *Id.* (quoting *Vidal*, 88 F.4th at 978).

Defendants contend that "[b]ecause the Federal Circuit's decision is binding, this Court should reject [Plaintiff's] proposal and adopt construction which mirrors that of the Federal Circuit[.]" *Id.* at 11.

In its response, Plaintiff first contends that although the Federal Circuit construed the term according to Defendants' proposed construction, another appeal for an IPR relating to the same patent and claim term is currently pending before the Federal Circuit. Response at 2.

Plaintiff contends that the intrinsic evidence supports the Court's prior construction, namely, that the specification "*expressly* distinguishes the claimed 'storage' module from a 'holding' module," in order to "readily distinguish between the capacitors of the two systems[.]" *Id.* at 2–3 (emphasis in Plaintiff's brief); *see also id.* at 3–5, 7–8. Plaintiff also contends that that the patentee did not act as their own lexicographer, but rather that the alleged lexicographical statement "allows a POSITA to identify whether a *system* is an energy transfer system or a sample-and-hold system based on what *component* (capacitor) is being used in that system." *Id.* at 5–6 (emphases in Plaintiff's brief). Plaintiff contends that "like other defendants before it, [Defendant] does <u>*not*</u> dispute that a 'storage' module is a module found only in an energy transfer system." *Id.* at 6 (emphasis in Plaintiff's brief).

Plaintiff contends that Defendants' proposed construction is technically and legally wrong. *Id.* More specifically, Plaintiff contends that Defendants' proposed construction would "cover any system in the world that stored non-negligible amounts of energy." *Id.* Plaintiff contends that that is incorrect because there are only two systems disclosed in the patent—energy transfer and sample-and-hold—and because a "holding" element is only used in the latter, "then a 'storage' element must necessarily be 'an element *of an energy transfer system*.'" *Id.* (emphasis in Plaintiff's brief).

In their reply, with respect to Plaintiff's argument that there is an upcoming appeal, Defendants contend that the "appeal to which [Plaintiff] cites relates to U.S. Patent No. 8,190,108, which is irrelevant to the issues of the present case." Reply at 1–2.

Defendants contend that the Federal Circuit "held that the patentee acted as his own lexicographer by expressing a clear intent to define 'storage element' in a section of the '551 patent specification that is identical to that in both the '177 and '528 patents in the present case," and that Defendants' proposed construction mirrors the Circuit's holding. *Id.* at 2. Defendants contend that Plaintiff "has offered no legal authority to support rejecting the Federal Circuit's determination." *Id.*

In its sur-reply, Plaintiff contends that although

> the Federal Circuit held that "a 'storage element' is 'an element of a system that stores non-negligible amounts of energy from an input EM signal" in an appeal related to IPR2020-01265, [Plaintiff] notes that the Federal Circuit set a date of June 9, 2024 for oral argument in the appeal related to IPR2021-0990 in which the term "storage element" will once again be addressed.

Sur-Reply at 1.

<u>The Undersigned's Analysis:</u>

After reviewing the parties' arguments and considering the applicable law, the undersigned agrees with Defendants that "storage element" / "energy storage element" should be construed as "an element of a system that stores non-negligible amounts of energy from an input electromagnetic signal."

The Federal Circuit held the patentees acted as their own lexicographer. *Vidal*, 88 F.4th at 976–77. The Federal Circuit analyzed the following paragraph from the '551 Patent:

> FIG. 82A illustrates an exemplary energy transfer system 8202 for down-converting an input EM signal 8204. The energy transfer system 8202 includes a

> switching module 8206 and a storage module illustrated as a storage capacitance 8208. The terms storage module and storage capacitance, as used herein, are distinguishable from the terms holding module and holding capacitance, respectively. Holding modules and holding capacitances, as used above, identify systems that store negligible amounts of energy from an under-sampled input EM signal with the intent of "holding" a voltage value. Storage modules and storage capacitances, on the other hand, refer to systems that store non-negligible amounts of energy from an input EM signal.

Id., '551 Patent at 66:55–67. This paragraph also appears verbatim in the '528 Patent. '528 Patent at 73:9–21. Furthermore, both the '528 Patent and the '817 Patent incorporate the '551 Patent by reference. '528 Patent at 1:30–34, '817 Patent at 33:9–12 (incorporating by reference to the application number 09/176,022).

Because the Federal Circuit concluded that the patentees acted as their own lexicographer and that "storage element" should be construed as "an element of a system that stores non-negligible amounts of energy from an input EM signal" based on a paragraph in the '551 Patent, which is incorporated into both the '528 and '817 Patents, the Federal Circuit's determinations are binding in this case. *Kinetic Concepts, Inc. v. Smith & Nephew, Inc.*, 688 F.3d 1342, 1363 (Fed. Cir. 2012) ("Thus, we have already construed the claims to include this limitation and that legal conclusion was binding on the district court and is binding on this panel.").

For that same reason, the undersigned disagrees with Plaintiff that a pending Federal Circuit decision regarding the same term for same patent (for IPR2021-0990) changes whether the Circuit's prior conclusion is binding. Rather, the holding in *Kinetic Concepts* is that the Federal Circuit's holding in one case is binding upon district courts and future Federal Circuit panels. *Id.* And Plaintiff did not provide any reasons why the Federal Circuit's holding in *Vidal* should not apply in this case.

Therefore, for the reasons described above, the undersigned concludes that the recommended construction for "storage element" / "energy storage element" should be "an

element of a system that stores non-negligible amounts of energy from an input electromagnetic signal."[2]

B. Term #2: "switch" / "switching device"

Term	Plaintiff's Proposed Construction	Defendants' Proposed Construction
#2: "switch" / "switching device" U.S. Patent No. 7,483,686, Claim 11; U.S. Patent No. 9,118,528, Claims 1, 5, 8, 17, 18, 19, 23, 26, 35, 36 Proposed by Both Sides	Plain-and-ordinary meaning wherein the plain-and-ordinary meaning is "an electronic device for opening and closing a circuit as dictated by an independent control input"	Plain-and-ordinary meaning wherein, the plain-and-ordinary meaning is "an electronic device for opening and closing a circuit."

Judge Albright, the undersigned, and Judge Gilliland all previously construed this term as plain-and-ordinary meaning wherein the plain-and-ordinary meaning is "an electronic device for opening and closing a circuit as dictated by an independent control input" which is Plaintiff's proposed construction. *Intel*, No. 6:20-cv-00108, ECF No. 75 at 6; *HiSense*, No. 6:20-cv-00870, ECF No. 51 at 107; *LG Elecs.*, No. 6:21-cv-00520, ECF No. 55 at 32.

<u>The Parties' Positions:</u>

Defendants contend that "as dictated by an independent control input" is an "additional feature" "not required by the claims, the specifications, or any other evidence of record." Opening at 12.

[2] During the hearing, the undersigned asked the parties if they anticipated that they might have difficulty applying the Circuit's construction in *Vidal*, which is the undersigned's recommended construction, given that the Circuit's construction does not provide the necessary context of the system, *e.g.*, energy-transfer system or sample-and-hold system, that would help a POSITA determine whether the system contains a "storage module" or an "holding module." Hearing Tr. (Rough) at 2:12–3:24. The parties indicated that they did not believe, at that moment, that there would be any difficulties applying that construction. *Id.* at 3:25–8:6.

Defendants contend that the patents "do not limit the claimed 'switch' to only those embodiments where an ***independent*** control signal is present[,]" but rather "state that the switch can be 'any type of suitable switch device.'" *Id.* (citing '528 Patent at 62:60–62) (emphasis in Defendants' brief). Defendants contend that Plaintiff's proposed construction excludes the "diode switch" which does not have an independent control input. *Id.* at 12, 13–15 (citing '528 Patent at 62:64–67, 63:21–23, 62:60–67, Figure 28C; '686 Patent at 9:7–13, Figures 45C, 45D). Defendants contend that '528 Patent "explains that a switch is simply an electronic device that opens and closes a circuit, which is consistent with the term's well-understood meaning in the art." *Id.* (citing '528 Patent at 62:5–25, Figures 82B, 45A, 45B).

Defendants contend that Plaintiff's proposed construction also "fails to encompass the embodiment wherein an optional feedback loop is utilized, in part, to generate the control signal." *Id.* at 15 (citing '528 Patent at 68:27–32). Defendants contend that "[b]y implementing this method, the control signal is not independent[.]" *Id.* (citing '528 Patent at Figure 30, 68:29–32).

Defendants contend that "an independent control input" in Plaintiff's proposed construction "creates tangential questions of fact (*e.g.*, what qualifies a control input as 'independent'?) that will only complicate the proceedings and confuse the jury." *Id.*

In its response, Plaintiff contends that this Court has "already considered and construed the term *multiple* times[,]" and adopted Plaintiff's proposed construction each time. Response at 8 (cases) (emphasis in Plaintiff's brief). Plaintiff contends that the court in the Middle District of Florida also used this language and rejected the same types of arguments Defendants raised for omitting the language. *Id.* at 9 (citing *ParkerVision Inc. v. Qualcomm Inc.*, No. 6:14-cv-687-Orl-40LRH, ECF No. 381 at 25–33 (M.D. Fla. Apr. 29, 2020)).

With respect to Defendants' argument regarding diode switches, Plaintiff contends that Defendants' "unsubstantiated attorney argument ignores what the intrinsic evidence actually says about diodes." *Id.* Plaintiff first contends that the specification "does not refer to a 'diode' by itself, but instead refers to a 'diode switch,' 'diode switch device' and, as shown in the Figures 28C, 28D, a 'switch module.'" *Id.* (citing '528 Patent at 62:64–67, 105:31–34, Figures 66C, 66D). Plaintiff further contends that Figures 28C and 28D depict that the diode is "merely *a part* of a 'switch module[.]'" *Id.* at 10. Second, Plaintiff contends that Figures 28A, 28C, and 28D depict switches with three ports, where the "independent control input" "causes the opening and closing of the circuit." *Id.* (citing '528 Patent at 62:64–67). Third, Plaintiff contends that Defendants' "reliance on portions of the '686 patent is misplaced because the cited disclosure describes a diode as part of a UFT module 202, not as part of a 'diode switch,' 'diode switch device,' or 'switch module.'" *Id.*

With respect to Defendants' argument that Figure 30 depicts a circuit where the control input is not independent, Plaintiff contends that undersampling module 1606, which includes a switch, has three ports, an input, an output and a control input, which is independent of the input.

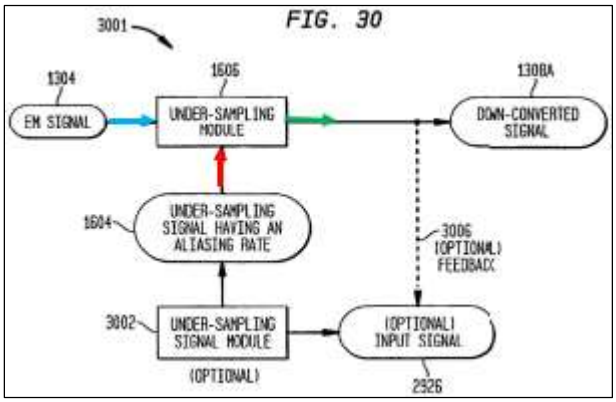

Id. at 11 (citing '528 Patent at Figure 30 (annotations in Plaintiff's brief)). With respect to Defendants' argument that Optional Feedback 3006 path shows some dependence between the output and the control input, Plaintiff contends that "even if a signal from the output (green) of the

under-sampling module 1606 is fed back into signal module 3002, the second input (red) is still independent of the input (blue)." *Id.* Plaintiff contends that the specification further confirms that Optional Feedback 3006 is independent of EM Signal 1304. *Id.* at 11–12 (citing '528 Patent at 68:36–39).

Plaintiff contends that the "claims themselves demonstrate that the 'switch' / 'switching device' must have an 'independent control *input*.'" *Id.* at 12 (emphasis in Plaintiff's brief). As a first example, Plaintiff contends that Claim 11 of the '686 Patent discloses that "an *input control* signal that is coupled to the switch and separate from the input signal: 'a switch configured to operate according to an *energy transfer signal*, and to subsample and transfer energy from *a first electromagnetic (EM) signal*.'" *Id.* (emphases in Plaintiff's brief). As a second example, Plaintiff contends that Claim 1 of the '528 patent is similar as it recites "a first switch coupled to *a first control signal* . . ., wherein the first switch is on and a portion of energy that is distinguishable from noise is transferred from *the modulated carrier signal* as *an output* of said first switch." *Id.* (emphases in Plaintiff's brief).

In their reply, Defendants contend that Plaintiff's "fails to solve the confusion surrounding the 'independent control input' portion of its proposed construction of this term" and its proposed construction "fails to encompass express embodiments in the '528 and '686 patents such as diode switches and optional feedback loop arrangements." Reply at 2. Defendants further contend that "[t]he simple fact that the parties do not agree on what constitutes 'an independent control input' is reason enough to not include this language in the term's construction." *Id.*

Defendants contend that Figures 28C and 28D of the '528 Patent depict two-port switches and "the so-called 'control input' (1604) is coupled directly to the input or output of those respective devices."

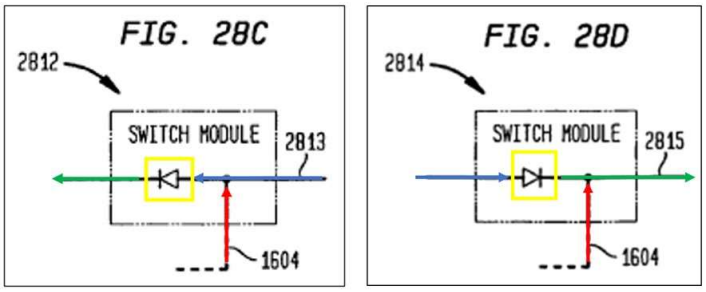

Id. at 3 (citing '528 Patent at Figures 28C, 28D (annotations in Defendants' brief)). Defendants contend that "[i]f not independent from either the input (blue) or output (green) of a two-port device, how can the control input (red) be 'independent'?" *Id.* Defendants contend that Plaintiff's proposed construction excludes these embodiments. *Id.*

Defendants contend that "[t]he same holds true for the '686 patent, which was not before this Court in previous claim construction contexts." *Id.* Defendants contend that the specification describes that the diode module in Figure 2 only has two ports.

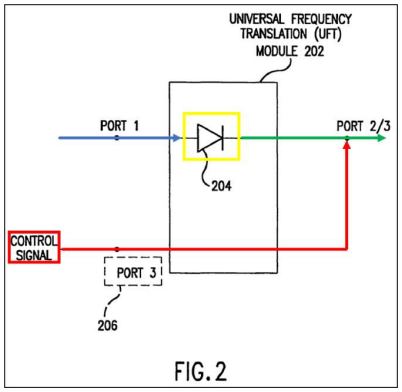

Id. at 2–3 (citing '686 Patent at 9:7–13). Defendants contend that "the control input of this embodiment in the '686 patent is excluded from [Plaintiff's] construction because the 'control input' is directly coupled to the output of the diode (Port 2/3) and therefore not 'independent.'" *Id.*

In its sur-reply, with respect to Defendants' argument that Plaintiff's proposed construction "fails to encompass express embodiments … such as diode switches and optional feedback loop

arrangements," Plaintiff contends that Defendants "simply mischaracterize[] what is disclosed in the specifications." *Id.* at 2. More specifically, Plaintiff contends that "[t]he flaw in Defendants' argument is that it equates a diode (shown in yellow above) to the switch/switching device" as the patent "specifically identifies the switch/switching device (which the patent refers to as a "switch module") as being more than the diode itself." *Id.* Plaintiff contends that "while the diode may have only an input and output (two ports), the switch/switching devices has an additional independent control input (red)."

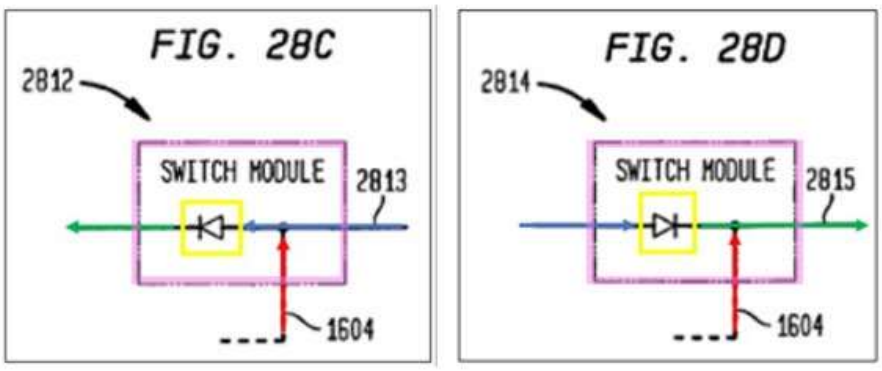

Id. (citing '528 Patent at Figures 28C, 28D (annotations in Plaintiff's brief)). With respect to Figure 2 in the '686 Patent, Plaintiff first contends that "the '686 patent does not state that the diode is the switch/switching device nor does specification identify what constitutes the switch/switching device." *Id.* at 3. Plaintiff next contends that "Figure 2 illustrates a separate independent control input (second input) (red arrow) which will dictate the opening and closing of a circuit." *Id.*

<u>The Undersigned's Analysis:</u>

After reviewing the parties' arguments and considering the applicable law, the undersigned agrees with Defendants that the terms "switch" and "switching device" should be construed as "an electronic device for opening and closing a circuit."

In light of the Federal Circuit's decision in *Vidal*, the undersigned concludes that construction of this term turns on whether Plaintiff is collaterally estopped. If so, then the Federal Circuit's construction in *Vidal* ("an electronic device for opening and closing a circuit") is the correct construction. For collateral estoppel to apply, "(1) the issue at stake must be identical to the one involved in the prior action; (2) the issue must have been actually litigated in the prior action; and (3) the determination of the issue in the prior action must have been a necessary part of the judgment in that earlier action." *Next Level Commc'ns LP v. DSC Commc'ns Corp.*, 179 F.3d 244, 250 (5th Cir. 1999).

Whether the issues are identical: With respect to the first element, in the IPR, Plaintiff proposed that "switch" should be construed as "an electronic device for opening and closing a circuit as dictated by an independent control input." Reply, Ex. 25 at 19. Here, the terms-at-issue are "switch" / "switching device." Obviously, the term "switch" is identical in the IPR and in this case. The undersigned concludes that "switching device," which only appears in the '528 Patent, is also the same as "switch" for a few reasons. ***First***, the specification of the '528 Patent appears to use "switching device" and "switch" synonymously. '528 Patent at 113:55–60 ("In an embodiment, the switch modules discussed herein can be implemented as a series of switches operating in parallel as a single switch. The series of switches can be transistors, such as, for example, field effect transistors (FET), bi-polar transistors, or any other suitable circuit switching devices."). ***Second***, the parties make identical arguments for both "switch" and "switching devices," which indicates that the parties also consider the two to be synonymous. ***Third***, Plaintiff proposes the exact same construction that it proposed during the IPR, which further indicates that Plaintiff considers that "switch" and "switching devices" are synonymous.

Furthermore, the IPR was for U.S. Patent No. 8,190,108. The '108 Patent claims priority and shares a specification with U.S. Patent No. 6,091,940. The '940 Patent also contains the key passage that the PTAB relied on in its construction. '940 Patent at 1:54–60. Both the '686 and '528 Patents incorporate the '940 Patent. '686 Patent at 1:53–54, '528 Patent at 1:38–40. The fact that the paragraph that is at-issue in this case is identical to the paragraph involved in the prior action indicates that the issues are the same.

Therefore, the undersigned concludes that the issue in the current case is identical to the one involved in the prior action.

Whether the issue was actually litigated: With respect to the second element, the undersigned concludes that the parties actually litigated the issue in the prior action. The parties disputed the construction of the exact term (and a synonym) in the PTAB, and the PTAB rejected Plaintiff's proposed contruction. Reply, Ex. 25 at 25–26 ("Based on our review of the complete record before us, including the intrinsic and extrinsic evidence, we determine that one of ordinary skill in the art would understand 'switch' to mean 'an electronic device for opening and closing a circuit.'"). The Federal Circuit issued a Rule 36 judgment for that IPR. *ParkerVision, Inc. v. Vidal*, No. 2022-2173, at 2.

Whether issue was a necessary part of judgment in earlier action: With respect to the third issue, the undersigned concludes that the determination of the issue in the prior action must have been a necessary part of the judgment in that earlier action. More specifically, the PTAB found that Claim 1 of U.S. Patent No. 8,190,108 to be invalid because the prior art disclosed, *inter alia*, a "switch." *See, e.g.*, Reply, Ex. 25 at 40. Therefore, the PTAB's construction of "switch" was a necessary part of the PTAB's conclusion that the claims were invalid.

Therefore, because collateral estoppel applies, the undersigned concludes that the construction of "switch" and "switching device" should be "an electronic device for opening and closing a circuit."

C. Term #3: "coupled"

Term	Plaintiff's Proposed Construction	Defendants' Proposed Construction
#3: "coupled" U.S. Patent No. 7,483,686, Claim 11; U.S. Patent No. 9,118,528, Claims 1, 19 Proposed by Defendant	Plain-and-ordinary meaning	"directly connected or connected through a wire (or a closed switch)"

Judge Albright previously construed this term as plain-and-ordinary meaning wherein the plain-and-ordinary meaning is "coupled" is "directly connected or connected through a wire (or a closed switch)," which is Defendants' proposed construction. *See, e.g.*, *ParkerVision, Inc. v. Realtek Semiconductor Corp.*, No. 6:22-cv-01162, ECF No. 93 at 29 (W.D. Tex. April 2, 2024).

<u>The Parties' Positions:</u>

Defendants contend that this Court has already construed the term "coupled" multiple times, and given that there is "no distinction between the usage of the term 'coupled' amongst the various [Plaintiff's] patents, there is no reason to contradict this Court's most recent construction, and [Plaintiff] can offer no legitimate basis to do so." Opening at 16.

Defendants contend that "the '686 patent is in the same family and relates back to the same patent (U.S. Patent No. 6,879,817) as [U.S. Patent No. 7,292,835] analyzed by the Court in the above-cited *Intel* case." *Id.* Defendants contend that "the patents also use essentially the same

claim language around the term 'coupled' in their respective claims." *Id.* (comparing '686 Patent at 51:59 with '474 Patent at 85:56–64 with '835 Patent at 52:20–24).

In its response, Plaintiff contends that while the Court previously construed this term in connection with U.S. Patent Nos. 7,292,835 and 7,539,474, the "Court's prior constructions would be improper here because they exclude express embodiments described in the '686 and '528 patent specifications." Response at 12–13 (citing *Oatey Co. v. IPS Corp.*, 514 F.3d 1271, 1276 (Fed. Cir. 2008)). In particular, Plaintiff contends that "for specific embodiments, the '686 and '528 patents use the term 'coupled' to describe a connection between one circuit component (such as a UFT module) and another (such as a reference potential) that includes an intervening component (such as a resistor)." *Id.* at 13.

Plaintiff contends that Figure 33 of the '686 Patent "illustrates a UFT module 2620 (purple box) connected to a reference potential 3308 (green box) along a conductive path (yellow)."

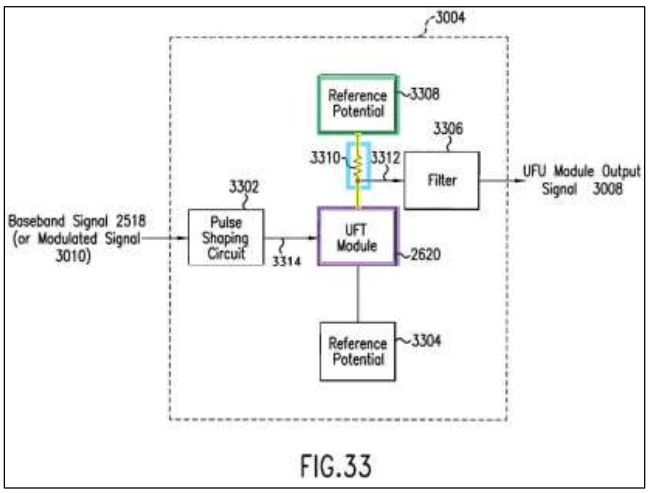

FIG.33

Id. (citing '686 Patent at Figure 33 (annotations in Plaintiff's brief)). Plaintiff contends that the specification describes "[o]ne terminal of UFT module 2620 is coupled to a first reference potential 3304. The second terminal of UFT module 2620 *is coupled through resistor 3310 to a second*

reference potential 3308." *Id.* at 14 (quoting '686 Patent at 46:45–48 (emphasis in Plaintiff's brief)).

Similarly, Plaintiff contends that Figure 70 of the '528 Patent "illustrates a switch 7016 connected to a voltage source 7014 (orange box) along a conductive path (pink)."

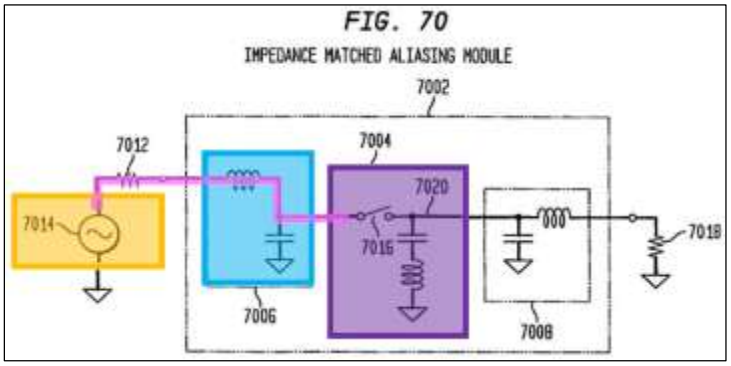

Id. at 14 (citing '528 Patent at Figure 70 (annotations in Plaintiff's brief)). Plaintiff contends that the specification "explains that this intervening matching circuit 7006 (blue) 'can be utilized to *efficiently couple an input EM signal* [orange box] that has a source impedance of, for example, 50 ohms, with the energy transfer module's [purple box] impedance of, for example, 300 ohms.'" *Id.* (citing '528 Patent at 122:13–17).

In their reply, Defendants contend that "[n]othing has changed in the intervening two months to justify a deviation from the Court's most recent construction of 'coupled.'" Reply at 4.

Defendants contend that Plaintiff "argue[s] that because the patents generically use the term 'coupled' to refer to indirect coupling between two components, the Court should disregard its construction of this term consistent with how it is recited in the claims." Defendants contend that the claim language recites direct coupling. *Id.* at 4–5 (citing '528 Patent, Claims 1, 19; '686 Patent, Claim 11). Defendants contend that "[n]owhere in the '528 or '686 patents is anything other than a direct coupling disclosed as it relates to the relationship of these components." *Id.* at 5.

In its sur-reply, Plaintiff contends that "there is nothing in the specification (and [Defendants] ha[ve] not pointed to anything) indicating that the term 'coupled' has a special meaning or means different things depending on which circuit elements are being coupled." Sur-Reply at 3–4.

With respect to Defendants' argument that nothing has changed in the intervening last two months, Plaintiff contends that the "Court has not previously considered the disclosure of the '686 patent." *Id.* at 4. With respect to Figure 33 of the '686 Patent, Plaintiff contends that "the specification describes the UFT Module 2630 (purple) being 'coupled' through a resistor 3310 (blue) to the Reference Potential 3308 (green)." *Id.* (citing '686 Patent at 46:45–48). With respect to Figure 70 of the '528 Patent, Plaintiff contends that "the '528 patent explains that the EM signal (orange) can be coupled to the energy transfer module (purple) through the matching circuit (blue)." *Id.* at 5 (citing '528 Patent at 122:13–17). Plaintiff contends that "[c]ontrary to [Defendants'] construction, there is no requirement that there is a direct connection and the diagram above illustrates an embodiment where coupling can occur through a resistor but not a switch." *Id.* at 4.

<u>The Undersigned's Analysis:</u>

After reviewing the parties' arguments and considering the applicable law, the undersigned concludes that the proper construction is plain-and-ordinary meaning wherein "coupled" includes both direct and indirect connections. ***First***, with respect to the first part of the construction, the "heavy presumption" is that terms should be construed according to their plain-and-ordinary meaning. *Azure Networks*, 771 F.3d at 1347.

Second, neither party alleges lexicography or disclaimer, which are the only two exceptions to the general rule that a term should be construed as having its plain-and-ordinary meaning. *Thorner*, 669 F.3d at 1365.

Third, with respect to the issue of whether "coupled" includes indirect connections, the undersigned concludes that it does. With respect to Figure 33 of the '686 Patent, the specification describes that UFT module 2620 is indirectly coupled to reference potential 3308. '686 Patent at 46:45–48 ("The second terminal of UFT module 2620 is coupled through resistor 3310 to a second reference potential 3308."). More specifically, the specification describes that the second terminal of UFT module 2620 is indirectly coupled to second reference potential 3308, namely, through resistor 3310.

With respect to Figure 70 of the '528 Patent, the specification describes that "[a]n impedance matching circuit can be utilized to efficiently ***couple*** an input EM signal that has a source impedance of, for example, 50 ohms, with the energy transfer module's impedance of, for example, 300 ohms." '528 Patent at 122:13–17 (emphasis added). The specification uses Figure 70 to illustrate this statement. *Id.* at 122:17–21 ("Matching these impedances can be accomplished in various manners, including providing the necessary impedance directly or the use of an impedance match circuit as described below. Referring to FIG. 70…"). The specification then describes that impedance 7012, which is the source impedance of the RF signal, has an impedance of 50 Ohms and that input impedance 7016, which is the input impedance of energy transfer module 7006, has an impedance of 300 Ohms. *Id.* at 7:13–17. The specification describes that input impedance match module 7006, which is an impedance matching circuit, can be inserted between impedance 7012 and input impedance 7016. *Id.* at 7:25–27. Based on these disclosures, the undersigned concludes that a POSITA would understand "coupling" the source impedance of

an input EM signal (*i.e.*, the RF signal in Figure 70) with the energy transfer module's impedance (*i.e.*, input impedance 7016, which is the input impedance of energy transfer module 7006, in Figure 70) includes indirect connections because of the presence of impedance matching circuit (*i.e.*, input impedance match module 7006 in Figure 70).

Finally, while the undersigned's recommended construction deviates from the Court's prior construction, the reason for this is because Plaintiff did not appear to raise the arguments corresponding to Figures 48 and 70 in prior cases. But given that it is clear that the specifications disclose that "coupled" includes indirect connections, the undersigned believes that the specification supports broadening the Court's prior construction to include indirect connections. *Phillips*, 415 F.3d at 1316 (Fed. Cir. 2005) ("[T]he specification 'is always highly relevant to the claim construction analysis. Usually, it is dispositive; it is the single best guide to the meaning of a disputed term.'") (quoting *Vitronics Corp. v. Conceptronic, Inc.*, 90 F.3d 1576, 1582 (Fed. Cir. 1996)).

Therefore, for the reasons described above, the undersigned recommends that the term should be construed as plain-and-ordinary meaning wherein "coupled" includes both direct and indirect connections.

D. Term #4: "matched filtering/correlating module"

Term	Plaintiff's Proposed Construction	Defendants' Proposed Construction
#4: "matched filtering/correlating module" U.S. Patent No. 7,865,177, Claim 14 Proposed by Plaintiff	"linear time-variant circuitry that samples a modulated RF (radio frequency) carrier signal at an aliasing rate using a switch with an independent control input driven by a control signal with a non-negligible, periodic aperture, such that the samples, having non-negligible available energy, are accumulated and transferred to a load while the switch is closed and discharged through the load while the switch is open, thereby transferring available real power from the modulated RF carrier signal to the load and producing a downconverted signal with enhanced signal-to-noise power ratio"	Plain-and-ordinary meaning

<u>The Parties' Positions:</u>

Defendants contend that Plaintiff adopts the court's construction from the Middle District of Florida. Opening at 17. Defendants contend that Plaintiff's proposed construction is "unruly, extremely confusing to a jury, and is factually incorrect." *Id.* Defendants contend that Plaintiff's proposed construction unnecessarily introduces "highly technical terms such as 'linear time-variant circuitry' and 'aliasing rate' that are not readily understood by a lay person." *Id.* at 19.

Defendants contend that Plaintiff's proposed construction "introduces several limitations into the claim that are not required, but are simply embodiments of the invention." *Id.* Defendants

contend that Plaintiff's proposed construction requiring a "switch" excludes embodiments that do not include a switch, *e.g.*, Figure 148. *Id.*

With respect to "linear time variant circuitry" in Plaintiff's proposed construction, Defendants contend that the specification "does not require linear time-variant circuitry, ***it merely permits it to be used as a modeling tool***." *Id.* at 19–20 (emphasis in Defendants' brief). As such, Defendants contend that Plaintiff's proposed construction improperly imports a specific embodiment into the claim term. *Id.* at 20 (citing *Phillips*, 415 F. 3d at 1323).

With respect to "with enhanced signal-to-noise power ratio" in Plaintiff's proposed construction, Defendants contend that including that phrase would improperly import a limitation from an embodiment. *Id.* (citing '177 Patent at 131:1–13). Defendants contend that Plaintiff's proposed construction "introduces ambiguity by using the relative term of degree 'enhanced[,]'" which is improper to add a phrase without objective boundaries. *Id.* Defendants contend that "a matched filter correlating module does not ***always*** enhance the signal-to-noise power ratio." *Id.* (emphasis in Defendants' brief). Rather, Defendants contend that while a "matched filter/correlating module certainly can provide a good signal-to-noise power ratio of the down-converted signal," the specification describes that the "quality of the down-converted electromagnetic signal is a function of how efficiently the various embodiments of the present invention are able to accumulate the energy of the approximate half cycles of the carrier signal." *Id.* at 21 (quoting '177 Patent at 130:63–67).

With respect to "accumulated and transferred to a load while the switch is closed" in Plaintiff's proposed construction, Defendants contend that including this phrase would improperly import a limitation from an embodiment into the claim term. *Id.* (citing '177 Patent at 131:27–37, 131:38–40).

Defendants finally contend that Plaintiff's proposed construction should be rejected because it adopted the construction from the Middle District of Florida, but that court made "factual errors." *Id.* More specifically, Defendants contend that the Middle District of Florida court "found that the finite time integrating system of Fig. 151 and the RC processing system of Fig. 153 are examples of matched/filtering correlating modules," which is not correct as those embodiments are "approximations" of a match filtering/correlating module. *Id.* at 22–23 (citing *Qualcomm Inc.*, No. 6:14-cv-687-Orl-40LRH, ECF No. 381 at 12–16). Defendants contend that because "the patent consistently distinguishes between the 'matched filter/correlator' and alternatives like the 'RC processing system' and 'a finite time integrator[,]'" "[r]e-writing the four words 'matched filtering/correlating module' with a 91-word definition to cover a finite time integrator or a RC processing system would be legal error." *Id.* at 23.

In its response, Plaintiff contends that the court in the Middle District of Florida adopted Plaintiff's proposed construction. Response at 15. Plaintiff contends that "the '177 specification explains that 'the description of the present invention contained herein is a unique and specific application of matched filter theory, sampling theory, and frequency domain techniques. It is not taught or suggested in the present literature." *Id.* (citing '177 Patent at 130:4–9). Based on that, Plaintiff contends that "the term is not straightforward nor does it have a plain and ordinary meaning[.]" *Id.*

Plaintiff contends that its proposed construction "comes directly from the specification, and captures a number of structural details, which together provide an accurate description of the '177 matched filter/correlator embodiments (as shown in Figures 149, 151, and 153)[.]" *Id.* With respect to "linear time-variant circuitry" in its proposed construction, Plaintiff contends that the

disclosed embodiments are linear time-variant circuits. *Id.* (citing '177 Patent at Figures 149, 151, 153; 172:50–51).

With respect to "that samples a modulated RF (radio frequency) carrier signal at an aliasing rate" in its proposed construction, Plaintiff contends that the claimed invention "is not a traditional realization of a matched filter designed to extract information at the data bandwidth[,]" but rather that "the correlation properties of the filter of the embodiments exploit specific attributes of bandpass waveforms to *efficiently down convert signals from RF*." *Id.* at 16 (citing '177 Patent at 136:46, 136:51–56) (emphasis in Plaintiff's brief). Plaintiff contends that the specification describes extracting samples and that "[i]f many such matched filter correlation *samples* are extracted, the original information modulated onto the carrier is recovered." *Id*. (citing '177 Patent at 154:29–31, 140:41–46). Plaintiff contends that the present invention is directed towards "down-converting an electromagnetic (EM) signal by aliasing the EM signal. . . . By taking a carrier and aliasing it at an aliasing rate, the invention can down-convert that carrier to lower frequencies." *Id.* (citing '177 Patent at 26:22–28).

With respect to "using a switch with an independent control input driven by a control signal with a non-negligible, periodic aperture" in Plaintiff's proposed construction, Plaintiff contends that "the embodiments shown in each of Figures 149, 151, and 153 include a switch (14904, 15102, and 15304, respectively)[.]" *Id.* (citing '177 Patent at Figures 149, 151, 153; 131:59, 131:66–67, 133:27, 133:29–30, 134:34, 134:37–38). Plaintiff further contends that the control signal has a non-negligible aperture length T_A, *e.g.*, the length of a half cycle of the carrier signal. *Id.* (citing '177 Patent at 132:1–3).

With respect to "such that the samples, having non-negligible available energy" in Plaintiff's proposed construction, Plaintiff contends that "[t]he energy transferred is nonnegligible,

because 'a matched/filtering/correlating process … preserves the energy of the electromagnetic signal and transfers it through the processor.'" *Id.* (citing '177 Patent at 130:37–39).

With respect to "are accumulated and transferred to a significant load while the switch is closed and discharged through the load while the switch is open" in Plaintiff's proposed construction, Plaintiff contends that the specification describes that "[t]he results of each matched filtering/correlating process are accumulated, for example using a capacitive storage device, and used to form a down-converted version of the electromagnetic signal." *Id.* at 17 (citing '177 Patent at 130:28–31). Plaintiff contends that "energy is transferred to a load (e.g., resistor R_L in Figure 175A or resistor R in Figure 175B), because the load is connected across the storage device (e.g., capacitor C in Figure 175A or capacitor C_S in Figure 175B). *Id*. (citing '177 Patent at 147:35–42, Figures 175A–C).

With respect to "thereby transferring available real power from the modulated RF carrier signal to the load" in Plaintiff's proposed construction, Plaintiff contends that the patent "derives equations that describe the effect that circuit and aperture timing values have on the power transferred to the load." *Id.* (citing '177 Patent at 148:25–149:19).

With respect to "and producing a downconverted signal with enhanced signal-to-noise power ratio" in Plaintiff's proposed construction, Plaintiff contends that the matched filtering/correlating operations "produce[] *enhanced* (*and in some cases the best possible) signal-to-noise ratio[] (SNR) for the processed waveform*." *Id*. at ('177 Patent at 130:34–37) (emphasis in Plaintiff's brief).

With respect to Defendants' argument regarding errors in the Middle District of Florida court's analysis, Plaintiff contends that that court rejected the same types of arguments that Defendants raise here. *Id.* at 18. More specifically, Plaintiff contends that the Middle District of

Florida court concluded that Figures 151 and 153 are additional embodiments of the "matched filter/correlating module. *Id.* Plaintiff contends that Defendants are incorrect that these are not embodiments of "matched filtering/correlating module" as the specification "expressly characterized [them] as 'matched filtering/correlating modules.'" *Id, (*citing *See Accent Packaging, Inc. v. Leggett & Platt, Inc*., 707 F.3d 1318, 1326 (Fed. Cir. 2013)).

In their reply, Defendants contend that in order to adopt Plaintiff's proposed construction the Court will have to conclude that Figures 151 and 153 are "matched filtering/correlating modules and not, as recited in the specification, ***approximations*** of a matched filtering/correlating module used to save expense or reduce complexity." Reply at 5 (citing '177 Patent at 132:20–30) (emphasis in Defendants' brief). Defendants contend that while the specification describes Figure 149 as an embodiment of a "matched filtering/correlating module," the "embodiments of Figs. 151 and 153 are described in differently titled sections of the specification and are expressly identified as ***approximations*** of a matched filtering/correlating module." *Id.* at 6 (citing '177 Patent at 132:18–30, 133:41–49) (emphasis in Defendants' brief). Defendants contend that neither alterative is "within Section 1.1 of the '177 patent specification, titled "High Level Description of a ***Matched Filtering/Correlating*** Characterization/Embodiment of the Invention." *Id.* at 7 (citing '177 Patent at 130:49-50) (emphasis in Defendants' brief).

Defendants contend that Plaintiff fails to address Defendants' arguments with respect to "linear time-variant circuitry" (improper importation of a limitation from the specification) and "use of the phrase 'with enhanced signal-to-noise power ratio' injects an unbounded term of degree into the construction." *Id.* Defendants further contend that "other technical inaccuracies identified in [Defendants'] opening brief were similarly not even mentioned in [Plaintiff's] response." *Id.* at 7–8.

In its sur-reply, Plaintiff contends that Defendants have "not shown why the District Court in Florida got the construction wrong." Sur-Reply at 5.

Plaintiff contends that "the term 'matched filtering/correlating module' is not a term of art nor ha[ve] [Defendants] shown that it is." *Id.* at 5–6. Plaintiff contends that the specification "specifically states that "the operation of the present invention *represents a* ***new*** *signal-processing paradigm*" and that "the description of the present invention contained herein is *a* ***unique*** **and** ***specific application*** **of matched filter theory, sampling theory, and frequency domain techniques. It is** ***not taught or suggested*** **in the present literature**." *Id.* at 6 (quoting '177 Patent at 154:21–22, 130:4–9 (emphases in Plaintiff's brief)). Based on that, Plaintiff contends that "the construction <u>cannot</u> just be plain and ordinary meaning" and the Court must look the at the specification to determine the meaning of the term. *Id.* (emphasis in Plaintiff's brief).

With respect to the issue of whether Figures 151 and 153 were embodiments of the "matched filtering/correlating module," Plaintiff contends that they should and that the court in the Middle District of Florida made that conclusion. *Id.*

With respect to Defendants' arguments regarding "linear time-variant circuitry" (improper importation of a limitation from the specification) and "use of the phrase 'with enhanced signal-to-noise power ratio' injects an unbounded term of degree into the construction," Plaintiff contends that it "explains its position as to why these concepts are appropriately incorporated into the construction" in its response. *Id.* at 7. Plaintiff contends that if Defendants have "a proposal as to the proper meaning of the term that did not include these concepts, [they] should have proposed an actual construction and not merely asserted plain and ordinary meaning." *Id.*

The Undersigned's Analysis:

After reviewing the parties' arguments and considering the applicable law, the undersigned agrees with Defendants that this term should be construed according to its plain-and-ordinary meaning wherein the module samples an input signal at an aliasing rate for the reasons that follow. ***First***, the "heavy presumption" is that terms should be construed according to their plain-and-ordinary meaning. *Azure Networks*, 771 F.3d at 1347.

Second, Plaintiff does not expressly allege lexicography or disclaimer, which are the only two exceptions to the general rule that a term should be construed as having its plain-and-ordinary meaning. *Thorner*, 669 F.3d at 1365.

Third, although the Plaintiff argues that plain-and-ordinary meaning "cannot" be the correct construction because the specification teaches that "the operation of the present invention *represents a* ***new*** *signal-processing paradigm*" and "the description of the present invention contained herein is *a* ***unique*** **and** ***specific application*** **of matched filter theory, sampling theory, and frequency domain techniques. It is** ***not taught or suggested*** **in the present literature**[,]" the undersigned disagrees. Response at 5–6 (emphases in Plaintiff's brief). More specifically, the undersigned concludes that neither passage actually describes that the "matched filter/correlation" module is a coined term or that the claimed invention describes these components in a way so as to redefine them, let alone rise to the "exacting" standard required for lexicography. *Hill-Rom*, 755 F.3d at 1371 ("The standards for finding lexicography and disavowal are exacting."). The first sentence ("the operation of the present invention represents a new signal-processing paradigm") simply recites the patentee's belief that the present invention is a new signal-processing paradigm. The second sentence reiterates the point of the first sentence, albeit in more detail; namely, that the present invention uses a specific combination of matched filter theory,

sampling theory, and frequency domain techniques. The undersigned does not find either sentence to be remarkable as all patents need to be novel. 35 U.S.C. § 102. Furthermore, the undersigned does not believe that this sentence uses the terms "matched filtering" and/or "correlation" in such a way that redefines the meaning of either term or the combination thereof. Rather, the passages only appear to describe that the claimed invention uses known techniques (matched filter theory, sampling theory, and frequency domain techniques) in a novel and unique combination.

Finally, to the extent that either sides' proposed construction excludes any embodiments, the undersigned concludes that the scope of the claim term includes all embodiments described at '177 Patent at 130:49–132:17. *Oatey*, 514 F.3d at 1276 ("We normally do not interpret claim terms in a way that excludes embodiments disclosed in the specification … where claims can reasonably be interpreted to include a specific embodiment, it is incorrect to construe the claims to exclude that embodiment, absent probative evidence to the contrary."). This passage describes three embodiments, which can be found in Sub-Section 1.1 ("High Level Description of a Matched Filtering/Correlating Characterization/Embodiment of the Invention"), Sub-Section 1.2 ("High Level Description of a Finite Time Integrating Characterization/Embodiment of the Invention"), and Sub-Section 1.3 ("High Level Description of an RC Processing Characterization/Embodiment of the Invention"). Section 1, which is entitled "Overview of the Invention," implies that each of the following subsections are perform all matched filtering/correlating operation. '177 Patent at 130:23–25 ("Embodiments of the present invention down-convert an electromagnetic signal by repeatedly performing a matched filtering or correlating operation on a received carrier signal."). That section further implies that other methods, *e.g.*, finite time integrating operation and an RC processing operation, are more practical ways of implementing matched filtering/correlating

operation. *Id.* at 130:40–44. But the specification describes that the invention is also directed towards these other embodiments. *Id.* at 130:29–30.

Furthermore, Sub-Section 1.1, which is entitled "High Level Description of a Matched Filtering/Correlating Characterization/Embodiment of the Invention," plainly describes matched filtering/correlating.[3] *Id.* at 132:49–132:17. Sub-Section 1.2 describes that a finite time integrator can be used as an "approximation" of a matched filter/correlator. *See id.* at 133:43–44; *see also id.* at 132:20–36. Similarly, Sub-Section 1.3 describes that the matched filter/correlator may be further approximated by using a resistor/capacitor (RC) processor. *Id.* at 133:43–47. Therefore, the undersigned concludes that, based on these passages, a POSITA would understand that the finite time integrator and RC processor embodiments are approximations of the matched filter/correlator. As such, all three embodiments are within the scope of this term.

Given how the specification of the '177 Patent describes the "present invention," the undersigned's recommended construction clarifies the meaning of plain-and-ordinary meaning in the context of this patent by adding "wherein the module samples an input signal at an aliasing rate." *Verizon Servs. Corp. v. Vonage Holdings Corp.*, 503 F.3d 1295, 1308 (Fed. Cir. 2007) ("When a patent thus describes the features of the 'present invention' as a whole, this description limits the scope of the invention"). More specifically, the specification describes that "[c]ontrary to conventional wisdom, the present invention is a method and system for down-converting an

[3] While the last paragraph in this section recites that "[a]s will be apparent to persons skilled in the relevant arts given the discussion herein, the present invention is not a traditional realization of a matched filter/correlator," the undersigned still concludes that the patentee did not coin a new term and/or act as their own lexicographer. '177 Patent at 132:15–17. Rather, the word "realization" indicates that the ***implementations*** of specific matched filter/correlator embodiments is new (*i.e.*, non-traditional), and not that the ***meaning*** of "matched filter/correlator" is new. The very next paragraph describes that the implementation of the "matched filter/correlator embodiment" may be too expensive or complicated. *Id.* at 132:24–27. That paragraph further explains that lower cost embodiments that provide acceptable results are available. *Id.* at 132:27–29. These sentences further confirm that "realization' refers to the implementation of the claimed matched filter/correlation modules.

electromagnetic (EM) signal by aliasing the EM signal." '177 Patent at 26:23–25; *see also* '177 Patent at 1:65–67.

Therefore, for the reasons described above, the undersigned finds that the term should be construed according to its plain-and-ordinary meaning wherein the module samples an input signal at an aliasing rate.

E. Term #5: "the energy discharged during any given discharge cycle is not completely discharged"

Term	Plaintiff's Proposed Construction	Defendants' Proposed Construction
#5: "the energy discharged during any given discharge cycle is not completely discharged" U.S. Patent No. 9,118,528, Claims 9, 27 Proposed by Plaintiff	Plain-and-ordinary meaning wherein the plain-and-ordinary meaning is "the energy that could potentially be discharged during any given discharge cycle is not completely discharged"	Plain-and-ordinary meaning

Judge Albright previously construed this term as not indefinite, plain-and-ordinary meaning, wherein the plain-and-ordinary meaning is "the energy that could potentially be discharged during any given discharge cycle is not completely discharged." *Intel*, No. 6:20-cv-00108, ECF No. 75 at 7. Judge Gilliland construed this term as not indefinite, plain-and-ordinary meaning. *LG Elecs.*, No. 6:21-cv-00520, ECF No. 55 at 42.

<u>The Parties' Positions:</u>

Defendants contend that the Court previously construed this term, but improperly rewrote and/or corrected the claim. Opening at 24–25. Defendants contend that "[r]egardless of how

nonsensical the claim language is, the Court must not endeavor to correct or re-write ambiguous claim language that is subject to multiple meanings." *Id.* at 25.

Defendants contend that the patentee is required "***to convey to the public what the applicant claims as the invention***." *Id.* (quoting *Regents of the Univ. of Cal. v. Eli Lilly,* 119 F.3d 1559, 1566, 43 USPQ2d 1398, 1404 (Fed. Cir. 1997), *cert. denied,* 523 U.S. 1089 (1998)) (emphasis in Defendants' brief). Defendants contend that here, however, Plaintiff "has admittedly failed in its duty to convey its invention (not once, but twice) since the '528 patent issued in 2015, and it should not be rescued so it can assert these claims now against [Defendants]." *Id.*

In its response, Plaintiff contends that in the prior *Intel* case, the Court provided additional clarification as recited in Plaintiff's proposed construction. Response at 19 (citing *Intel*, No. 6:20-cv-00108, ECF No. 75 at 4)).

With respect to Defendants' argument that Plaintiff's proposed construction rewrites the claim term, Plaintiff contends that Defendants "fail[] to analyze the term in the context of the full claim language and in view of the specification." *Id.* More specifically, Plaintiff contends that Figure 82B depicts the circuit claimed in Claim 9.

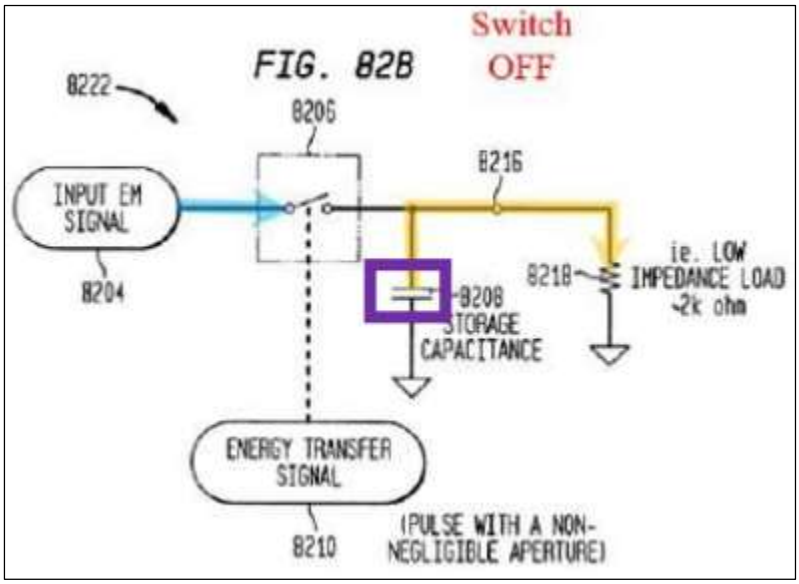

Id. (citing '528 Patent at Figure 82B (annotations in Plaintiff's brief)). Plaintiff contends that Claim 8 recites that "a portion of the transferred energy is discharged during the discharging part of the cycle for each respective switching device when the switching device is off" and Claim 9 further recites: "for each respective storage element, the energy discharged during any given discharge cycle is not completely discharged, with the remaining undischarged energy from the given discharge cycle becoming an initial condition for the next charging cycle." *Id.* at 20.

Plaintiff contends that the specification "discusses that when the storage element (capacitor) is not completely discharged, the energy remaining in the storage element provides the initial condition for the next charging (acquisition) cycle." *Id.* at 20–21 (citing '528 Patent at 147:25–39). Given that disclosure, Plaintiff contends that:

> In context, the term "the energy discharged during any given discharge cycle is not completely discharged" simply means that out of all of the energy stored in the storage element available for discharge (the energy that could potentially be discharged), not all of the energy is discharged during any given discharge cycle. In other words, there is some energy left in the storage element after a discharge cycle.

Response at 21. Plaintiff contends that this disclosure is consistent with the claim language's requirement that the "the *remaining undischarged energy* from the given discharge cycle becoming an initial condition for the next charging cycle[.]" *Id.* (emphasis in Plaintiff's brief).

In their reply, Defendants contend that Plaintiff concedes that "the Court re-wrote claims 9 and 27 of the '528 patent to clarify the language actually recited in the claims." Reply at 8. Defendants contend that Plaintiff fails to "demonstrate that there is an obvious and correctable error in the claim and that the proposed correction is not subject to reasonable debate." *Id.* (citing *CBT Flint Partners, LLC v. Return Path, Inc.*, 654 F.3d 1353, 1358 (Fed. Cir. 2011)).

Defendants contend that

> [Plaintiff's] position overlooks the fact that claims 8 and 26 (from which claims 9 and 27 depend) recite that not all energy transferred to the energy storage element is discharged during a discharge cycle: "a portion of the transferred energy is discharged during the discharging part of the cycle for each respective switching device when the switching device is off." ['528, 193:24– 26; *see also id*., 194:66–195:3]. Thus, the "remaining undischarged energy" of claims 9 and 27 more logically refers to the portion of the transferred energy that is not discharged during the discharging cycle, ***meaning that the subset of energy that is intended to be discharged is not completely discharged***.

Id. (emphasis in Defendants' brief). Based on that, Defendants contend that "[t]his dispute is subject to reasonable debate and, therefore, cannot be rewritten by the Court to correct [Plaintiff's] language." *Id.* (citing *CBT Flint Partners, LLC*, 654 F.3d at 1358).

In its sur-reply, Plaintiff contends that Defendants incorrectly assert that Plaintiff "conceded that the Court rewrote the claim language." Sur-Reply at 7. Rather, Plaintiff contends that it stated that the Court did not rewrite the claims. *Id.* at 8. Plaintiff contends that the Court "merely provided the plain and ordinary meaning for the term;" it did not correct an error, nor did Plaintiff requested that it do so. *Id.*

<u>The Undersigned's Analysis:</u>

After reviewing the parties' arguments and considering the applicable law, the undersigned adopts Plaintiff's proposed construction of plain-and-ordinary meaning wherein the plain-and-ordinary meaning is "the energy that could potentially be discharged during any given discharge cycle is not completely discharged" for the reasons that follow. ***First***, with respect to the first part of the construction, the "heavy presumption" is that terms should be construed according to their plain-and-ordinary meaning. *Azure Networks*, 771 F.3d at 1347.

Second, neither party alleges lexicography or disclaimer, which are the only two exceptions to the general rule that a term should be construed as having its plain-and-ordinary meaning. *Thorner*, 669 F.3d at 1365.

Third, the addition of "that could potentially be" in the undersigned's construction is not a correction, but rather is a clarification for the jury. *Sulzer Textil A.G. v. Picanol N.V.*, 358 F.3d 1356, 1366 (Fed. Cir. 2004) ("The district court simply must give the jury guidance that can be understood and given effect by the jury once it resolves the issues of fact which are in dispute."). Although the claim language is not necessarily a model of clarity for a lay jury to understand, the specification clearly describes what is being claimed in Claim 9. *Vitronics*, 90 F.3d at 1583 (Fed. Cir. 1996) ("Thus, the specification is always highly relevant to claim construction analysis. Usually it is dispositive; it is the single best guide to the meaning of a disputed term.").

Figure 82A depicts the operation of an exemplary storage element with a low impedance load to illustrate how the storage element discharges.

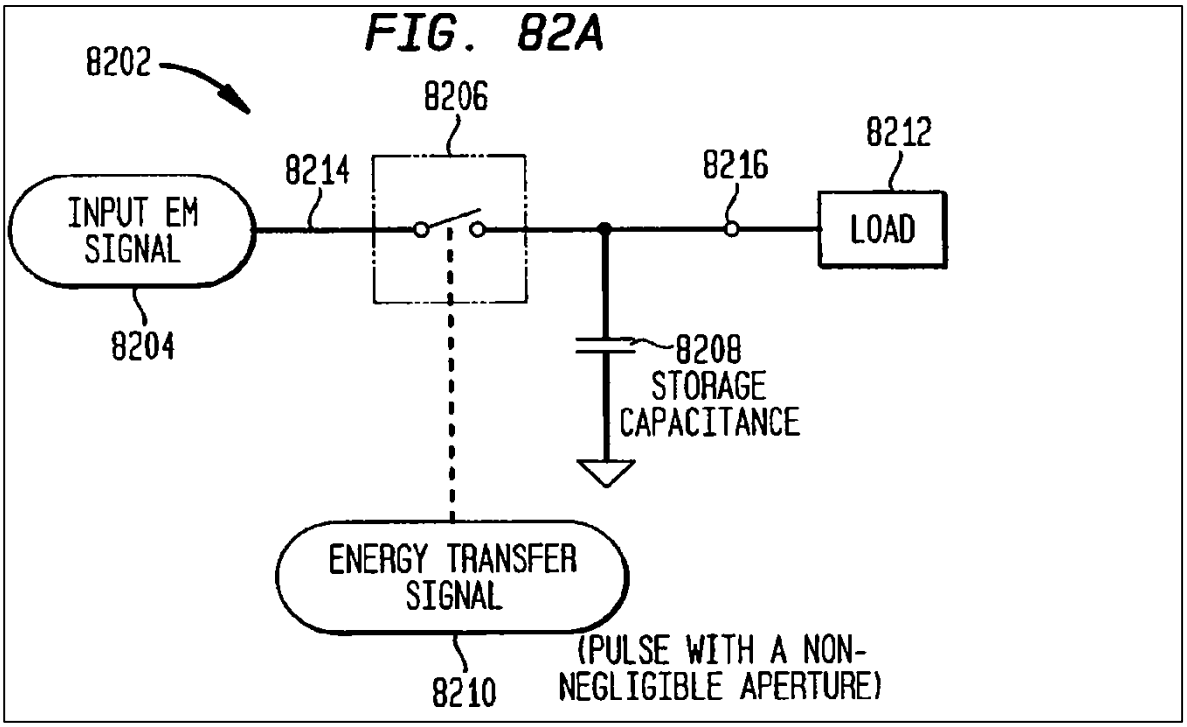

Before switch module 8206 opens, storage capacitance 8208 stores charge transferred from input EM signal 8204. '528 Patent at 73:41–43. When switch module 8206 is open, storage capacitance 8208 does not continue to charge, but can discharge through load 8212. *See, e.g.*, *id.* at 73:54–60. As such, the total amount of charge stored on storage capacitance 8208 that could be potentially discharged through load 8212 is the amount of charge stored on storage capacitance 8208 the instant switch module 8206 opens. If switch module 8206 remains open for a long time, storage capacitance 8208 will fully discharge such that the amount of charge stored on it will be zero. But if switch module 8206 closes before storage capacitance 8206 is fully discharged, the remaining charge on storage capacitance 8206 forms the initial condition—or starting point—for the next charging (or discharging) cycle.

The claim language mirrors this description. For example, the relevant portion of Claim 8 recites

> said portion of energy that is distinguishable from noise is [1] transferred to the respective storage element when the switch is on during the charging cycle, and [2] a portion of the transferred energy is discharged during the discharging part of the cycle for each respective switching device when the switching device is off.

'528 Patent, Claim 8 (annotations added). The phrase corresponding to the first annotation describes that a storage element, *e.g.*, storage capacitance 8208, charges during the charging cycle, *i.e.*, when switch module 8206 is closed. The phrase corresponding to the second annotation describes that a storage element, *i.e.*, storage capacitance 8208, discharges during the discharging cycle, *e.g.*, when switch module 8206 is open.[4] Notably, however, Claim 8 does not require that either all or only some of the charge stored on the storage element must be discharged, but rather Claim 8 is broad enough to cover either situation.

[4] Although Claims 1 and 8 do not expressly specify a load impedance, in order for the storage element to discharge, when the switch is closed, the charge stored on the storage element must discharge through an impedance connected to the storage element.

The relevant portion of Claim 9 recites "wherein for each respective storage element, the energy discharged during any given discharge cycle is not completely discharged, with the remaining undischarged energy from the given discharge cycle becoming an initial condition for the next charging cycle." *Id*., Claim 9. The phrase at the end of Claim 9 ("remaining undischarged energy from the given discharge cycle becoming an initial condition for the next charging cycle") indicates that only a portion of the charge that was stored on the storage element when the switch opened discharged during the discharge cycle. In other words, of the charge which was stored on the claimed storage element when the switch opened—which represents the total amount of energy that could potentially be discharged during any given discharge cycle—only a portion of that charge is discharged while the remainder is not. The remaining portion of undischarged energy at the beginning of the charging cycle becomes the starting point, *i.e.*, the initial condition, for the charging cycle.

Furthermore, a POSITA, putting together the phrase at the beginning of the relevant portion of Claim 9 ("for each respective storage element") with the end of the relevant portion ("remaining undischarged energy from the given discharge cycle becoming an initial condition for the next charging cycle"), would understand that Claim 9 describes partially—and not completely—discharging the storage element.

Based on the language in Claims 8 and 9, and the disclosures in the specification, a POSITA would understand that the term "the energy discharged during any given discharge cycle is not completely discharged" describes the energy that is stored during the charging cycle, *i.e.*, the energy that could potentially be discharged during any given discharge cycle, is only partially discharged, *i.e.*, is not completely discharged.

Therefore, for the reasons described above, the undersigned recommends that the term should be construed as plain-and-ordinary meaning, wherein the plain-and-ordinary meaning is "the energy that could potentially be discharged during any given discharge cycle is not completely discharged."

Finally, the undersigned does not believe that judicial correction is necessary as a POSITA would understand that the claim term means what the undersigned's recommended construction is. But, even if judicial correction were required, the undersigned concludes that the elements required for judicial correction are present. A district court can only correct an error in a claim if "(1) the correction is not subject to reasonable debate based on consideration of the claim language and the specification and (2) the prosecution history does not suggest a different interpretation of the claims." *Novo Indus., L.P. v. Micro Molds Corp.*, 350 F.3d 1348, 1357 (Fed. Cir. 2003).

With respect to the first element, as explained above, the claim language and the specification support the undersigned's recommended construction to be the correct judicial correction. Furthermore, Defendants do not appear to identify any alternative meaning and/or provides any arguments that indicate that there is a reasonable debate regarding the correct judicial correction. With respect to the second element, Defendants do not cite to anything in the prosecution history that suggests a different interpretation. As such, to the extent that the Court concludes that judicial correction is needed, the undersigned recommends that the Court adopt the undersigned's recommended construction as the correction for this term.

F. Term #6: "multi-platform module"

Term	Plaintiff's Proposed Construction	Defendants' Proposed Construction
#6: "multi-platform module" U.S. Patent No. 7,483,686, Claim 11 Proposed by Defendants	Plain-and-ordinary meaning	Plain and ordinary meaning, where "platform" refers to a communications protocol and/or bearer service.

<u>The Parties' Positions:</u>

Defendants contend that the only dispute between the parties is whether "platform" should be construed. Opening at 26.

Defendants contend that "platform" should be construed as "a communications protocol and/or bearer service," a construction that is supported by the specification. *Id.* More specifically, Defendants contend that the specification's description that "one of the problems with conventional computing and communication systems is that they can receive information signals from only a few platforms, and those platforms are usually predetermined" supports Defendants' proposed construction. *Id.* (citing '686 Patent at 2:19–22).

Defendants contend that the '686 Patent "is directed to a universal platform module (UPM) that operates for and/or within a computing or data processing device, such as a phone, personal computer, or smart appliance." *Id.* (citing '686 Patent at 7:32–38).

Defendants contend that the specification of the patent supports Defendants' proposed construction when it recites "[g]enerally platforms are layers on which protocols and bearer services are implemented and/or enabled." *Id.* at 27 (citing '686 Patent at 8:10–11). Defendants contend that Figure 32 "shows that the multi-platform module communications with multiple platforms, *i.e.*, communication protocols or bearer services."

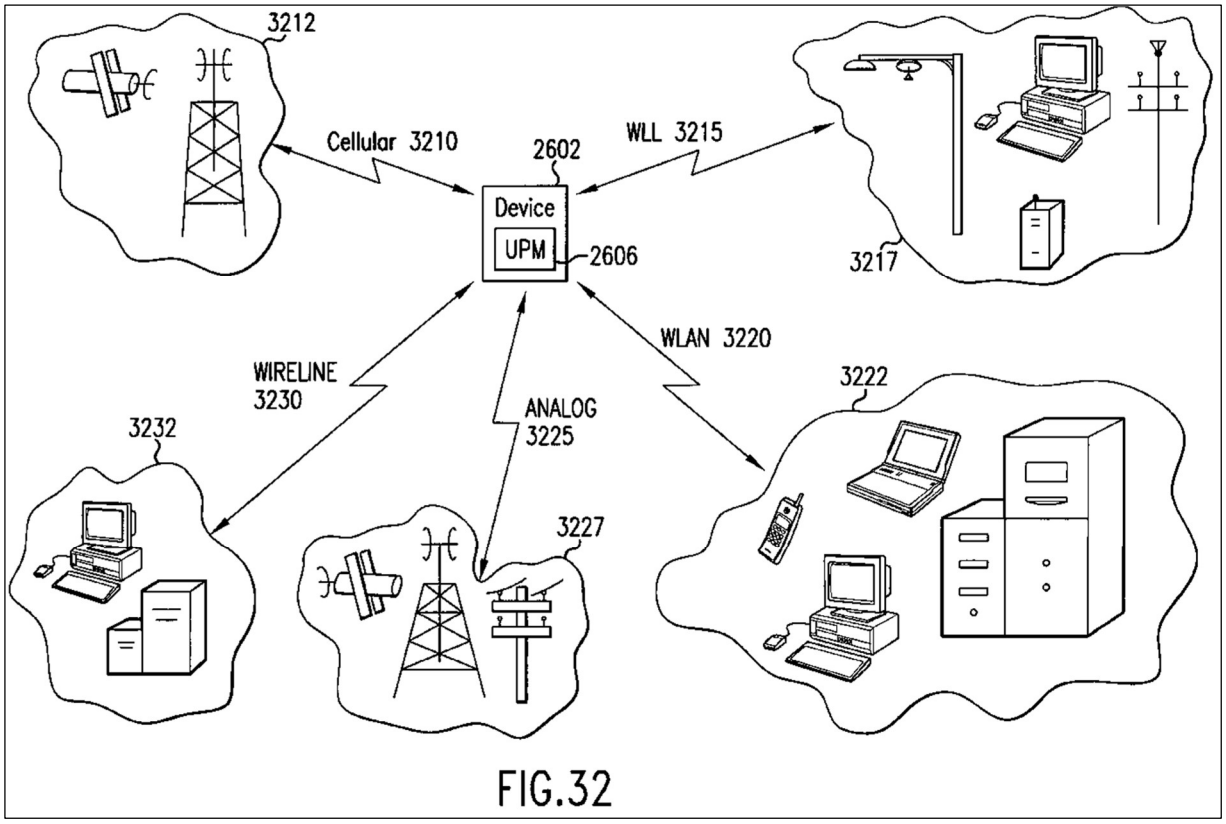

Id. Defendants contend that "[i]n referencing Fig. 40, the specification states that '[t]he invention is intended and adapted to operate ***with other communication links/types***, and these will be apparent to persons skilled in the relevant art(s) based on at least the teachings contained herein.'" *Id.* at 28 (quoting '686 Patent at 37:8–11 (emphasis in Defendants' brief)).

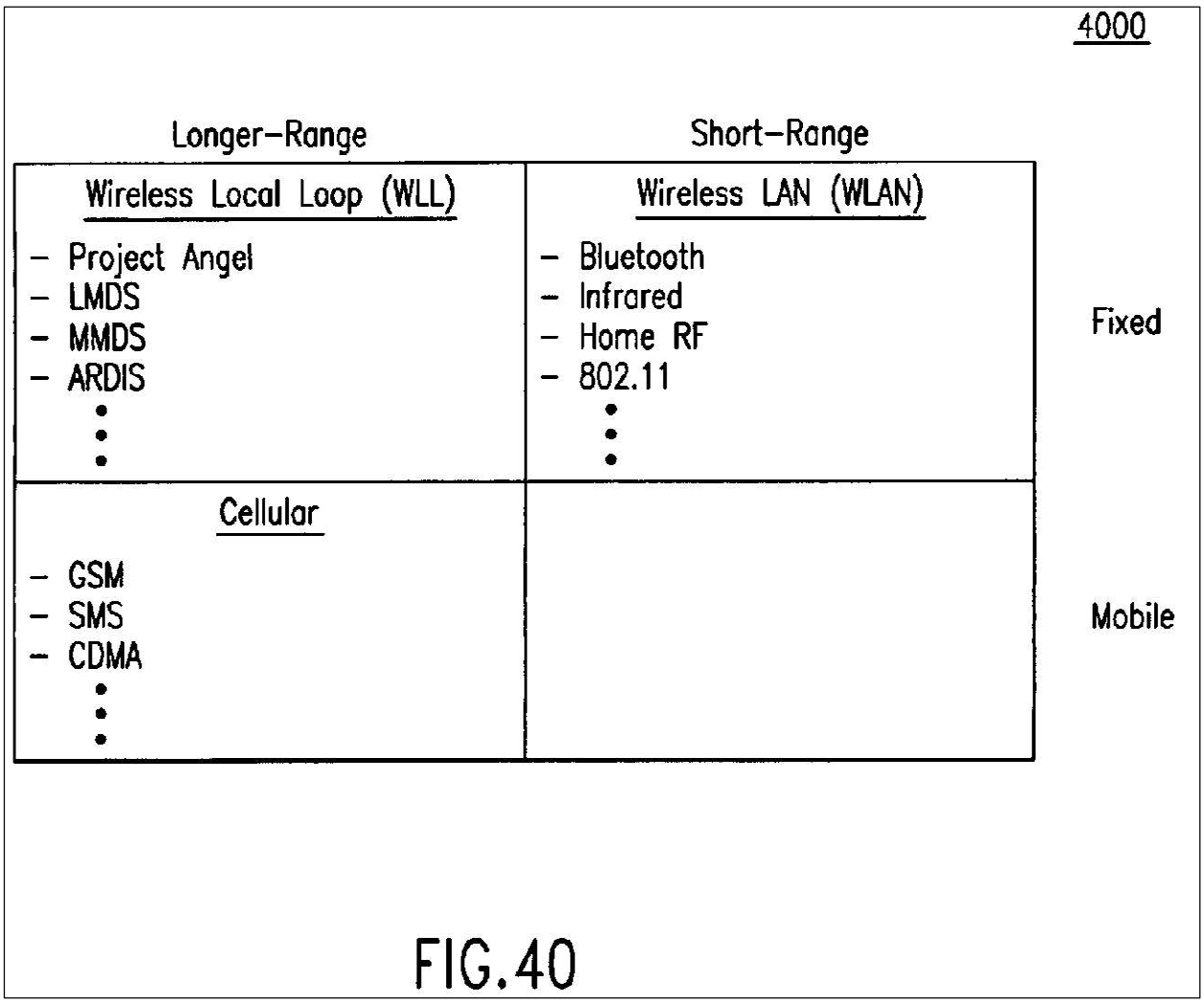

FIG.40

In its response, Plaintiff contends that the language of the term is straightforward and there are no unclear words, so the term does not require construction. Response at 21. Plaintiff contends that Defendants "seek[] to limit the word 'platform' to either 'a communications protocol or bearer service.'" *Id.*

Plaintiff contends that Defendants "simply cherry-pick[] portions of the specification to support its construction, while *purposefully omitting* others." *Id.* at 22 (emphasis in Plaintiff's brief). Plaintiff contends that the specification discloses that the "[universal platform module] utilizes protocols <u>and/or</u> bearer services <u>and/or</u> combinations thereof to exchange and/or process information with other components on any given network or networks (or any communication

medium, for that matter)." *Id.* (quoting '686 Patent at 7:48–52, 7:52–8:18 (emphases in Plaintiff's brief)). The specification further describes embodiments that "can operate according to *multiple protocol/bearer service combinations* (FIG. 39) *and/or multiple communication link/types* (FIG. 40)." *Id.* (citing '686 Patent at 38:39–43, 38:44–55, 8:30–36 (emphases in Plaintiff's brief)).

In their reply, Defendants contend that Plaintiff "argues that [Defendants'] proposed construction of 'platform' is incorrect because it 'refers to a communications protocol ***or*** bearer service,' while the specification states that the multi-platform module allows for communications protocol ***and/or*** bearer service[.]" Reply at 9 (emphases in Defendants' brief). Defendants "accept[] [Plaintiff's] correction and revises its proposed construction of 'multi-platform module' to be 'Plain and ordinary meaning, where "platform" refers to a communications protocol ***and/or*** bearer service.'" *Id.* (emphasis in Defendants' brief).

In its sur-reply, Plaintiff contends that it does not agree with Defendants' new proposed construction. Sur-Reply at 8. Rather, Plaintiff contends that it was only pointing out that the specification "referred to communications protocols *and/or* bearer services." *Id.* (emphasis in Plaintiff's brief).

Plaintiff contends that Defendants' new construction is "still wrong and overly narrow" because the specification "describes embodiments of a multi-platform module that 'can operate according to multiple protocol/bearer service combinations (FIG. 39) *and/or multiple communication link/types* (FIG. 40).'" *Id.* (emphases in Plaintiff's brief). Plaintiff contends that Defendants' new construction does not include those concepts and, thus, is wrong. *Id.*

The Undersigned's Analysis:

After reviewing the parties' arguments and considering the applicable law, the undersigned agrees with Plaintiff that this term should be construed according to its plain-and-ordinary meaning for the reasons that follow. ***First***, the "heavy presumption" is that terms should be construed according to their plain-and-ordinary meaning. *Azure Networks*, 771 F.3d at 1347.

Second, Defendants do not expressly allege lexicography or disclaimer, which are the only two exceptions to the general rule that a term should be construed as having its plain-and-ordinary meaning. *Thorner*, 669 F.3d at 1365.

Third, the term "platform" appears to be a well-known term of art and one the specification repeatedly without explanation. For example, in the "Related Art" section of the patent, the specification recites "[t]hese systems are currently constructed for receiving information signals for only a few platforms. Typically, the platforms available for a given device are predetermined." '686 Patent at 2:19–22. As another example, the "Summary of the Invention" section

> The present invention is directed to a universal platform module (UPM). The UPM includes at least one universal frequency translation (UFT) module implemented for signal reception, transmission and/or processing. In one embodiment, the UMP [sic] also includes a control module for operating the UFT module for any selected platform or combination of platforms.

Id. at 2:36–42. The fact that the specification describes that the invention is directed towards a ***universal*** platform module indicates that the term "platform" was commonly known and understood. Given that the term appears to be a term of art that a POSITA would understand, the undersigned concludes that there is no need to construe the term and plain-and-ordinary meaning is the appropriate construction.

Therefore, for the reasons described above, the undersigned concludes that the term should be construed according to its plain-and-ordinary meaning.

IV. CONCLUSION

In conclusion, for the reasons described herein, the undersigned recommends adopting the below constructions as the Court's constructions.

SIGNED this 21st day of October, 2024.

JOSHUA J. YI, Ph.D.

Term	Plaintiff's Proposed Construction	Defendants' Proposed Construction	Special Master's Recommended Construction
#1: "storage module" / "energy storage element" U.S. Patent No. 7,483,686, Claim 11; U.S. Patent No. 9,118,528, Claims 1, 5, 8, 17, 18, 19, 23, 26, 35, 36 Proposed by Both Sides	**Storage module**: "a module of an energy transfer system that stores non-negligible amounts of energy from an input electromagnetic signal" **Energy storage element**: "an element of an energy transfer system that stores non-negligible amounts of energy from an input electromagnetic signal"	"an element of a system that stores non-negligible amounts of energy from an input electromagnetic signal."	"an element of a system that stores non-negligible amounts of energy from an input electromagnetic signal"
#2: "switch" / "switching device" U.S. Patent No. 7,483,686, Claim 11; U.S. Patent No. 9,118,528, Claims 1, 5, 8, 17, 18, 19, 23, 26, 35, 36 Proposed by Both Sides	Plain-and-ordinary meaning wherein the plain-and-ordinary meaning is "an electronic device for opening and closing a circuit as dictated by an independent control input"	Plain-and-ordinary meaning wherein, the plain-and-ordinary meaning is "an electronic device for opening and closing a circuit."	"an electronic device for opening and closing a circuit"

Term	Plaintiff's Proposed Construction	Defendants' Proposed Construction	Special Master's Recommended Construction
#3: "coupled" U.S. Patent No. 7,483,686, Claim 11; U.S. Patent No. 9,118,528, Claims 1, 19 Proposed by Defendants	Plain-and-ordinary meaning	"directly connected or connected through a wire (or a closed switch)"	Plain-and-ordinary meaning wherein "coupled" includes both direct and indirect connections.

Term	Plaintiff's Proposed Construction	Defendants' Proposed Construction	Special Master's Recommended Construction
#4: "matched filtering/correlating module" U.S. Patent No. 7,865,177, Claim 14 Proposed by Plaintiff	"linear time-variant circuitry that samples a modulated RF (radio frequency) carrier signal at an aliasing rate using a switch with an independent control input driven by a control signal with a non-negligible, periodic aperture, such that the samples, having non-negligible available energy, are accumulated and transferred to a load while the switch is closed and discharged through the load while the switch is open, thereby transferring available real power from the modulated RF carrier signal to the load and producing a downconverted signal with enhanced signal-to-noise power ratio"	Plain-and-ordinary meaning	Plain-and-ordinary meaning wherein the module samples an input signal at an aliasing rate.

Term	Plaintiff's Proposed Construction	Defendants' Proposed Construction	Special Master's Recommended Construction
#5: "the energy discharged during any given discharge cycle is not completely discharged" U.S. Patent No. 9,118,528, Claims 9, 27 Proposed by Plaintiff	Plain-and-ordinary meaning wherein the plain-and-ordinary meaning is "the energy that could potentially be discharged during any given discharge cycle is not completely discharged"	Plain-and-ordinary meaning	Plain-and-ordinary meaning wherein the plain-and-ordinary meaning is "the energy that could potentially be discharged during any given discharge cycle is not completely discharged"
#6: "multi-platform module" U.S. Patent No. 7,483,686, Claim 11 Proposed by Defendants	Plain-and-ordinary meaning	Plain and ordinary meaning, where "platform" refers to a communications protocol and/or bearer service.	Plain-and-ordinary meaning