US009473602B2

(12) **United States Patent**
Jorgensen

(10) **Patent No.: US 9,473,602 B2**
(45) **Date of Patent: *Oct. 18, 2016**

(54) **PORTABLE ELECTRONIC DEVICE**

(71) Applicant: **Nokia Technologies Oy**, Espoo (FI)

(72) Inventor: **Claus H. Jorgensen**, Bronshoj (DK)

(73) Assignee: **Nokia Technologies Oy**, Espoo (FI)

(*) Notice: Subject to any disclaimer, the term of this patent is extended or adjusted under 35 U.S.C. 154(b) by 0 days.

This patent is subject to a terminal disclaimer.

(21) Appl. No.: **14/612,712**

(22) Filed: **Feb. 3, 2015**

(65) **Prior Publication Data**

US 2015/0148099 A1 May 28, 2015

Related U.S. Application Data

(63) Continuation of application No. 14/067,249, filed on Oct. 30, 2013, now Pat. No. 8,953,780, which is a continuation of application No. 13/741,781, filed on Jan. 15, 2013, now Pat. No. 8,615,077, which is a

(Continued)

(51) **Int. Cl.**

H04M 1/00	(2006.01)
H04M 9/00	(2006.01)
H04M 1/02	(2006.01)
H04M 1/04	(2006.01)

(52) **U.S. Cl.**

CPC ***H04M 1/0214*** (2013.01); ***H04M 1/0262*** (2013.01); ***H04M 1/0264*** (2013.01); ***H04M 1/0266*** (2013.01); ***H04M 1/0277*** (2013.01); ***H04M 1/04*** (2013.01); *H04M 1/0216* (2013.01)

(58) **Field of Classification Search**

CPC .. H04M 1/0214; H04M 1/0266; H04M 1/04; H04M 1/0264; H04M 1/0262; H04M 1/0277; H04M 1/0216

See application file for complete search history.

(56) **References Cited**

U.S. PATENT DOCUMENTS

5,164,542 A 11/1992 Hart ..... 174/35 MS
5,410,141 A 4/1995 Koenck et al. 235/472

(Continued)

FOREIGN PATENT DOCUMENTS

CN 1464716 A 12/2003
CN 1507735 A 6/2004

(Continued)

OTHER PUBLICATIONS

IPod Nano. (Oct. 28, 2013). In *Wikipedia, The Free Encyclopedia*. Retrieved 18:44, Nov. 12, 2013, from http://en.wikipedia.org/w/index.php?title=IPod_Nano&oldid=579129002, 12 pages.

(Continued)

Primary Examiner — Tuan D Nguyen
(74) *Attorney, Agent, or Firm* — Harrington & Smith

(57) **ABSTRACT**

A portable electronic device including a first section, a second section and a connecting section. The first section has a user input section and a first tubular housing member. The first tubular housing member forms a majority of opposite exterior lateral sides of the first section. The second section has a display and a second tubular housing member. The second tubular housing member forms a majority of opposite exterior lateral sides of the second section. The connecting section movably connects the second section with the first section. The first tubular housing member at least partially houses the user input section. The second tubular housing member at least partially houses the display.

36 Claims, 6 Drawing Sheets

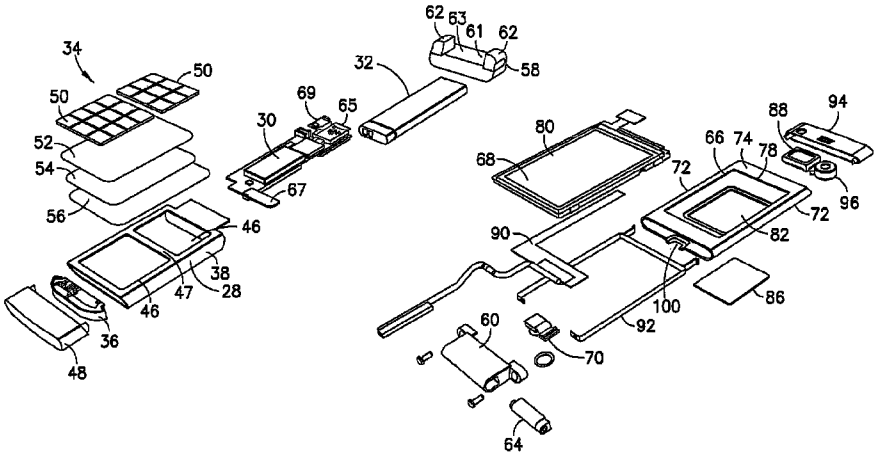

Related U.S. Application Data

continuation of application No. 12/860,234, filed on Aug. 20, 2010, now Pat. No. 8,363,824, which is a continuation of application No. 11/393,510, filed on Mar. 29, 2006, now Pat. No. 7,787,618.

(56) **References Cited**

U.S. PATENT DOCUMENTS

5,537,294	A	7/1996	Siwinski	361/753
5,541,448	A	7/1996	Carpenter	257/679
5,768,098	A	6/1998	Murayama	361/884
D416,256	S	11/1999	Griffin et al.	D14/191
6,011,699	A	1/2000	Murray et al.	361/814
D427,171	S	6/2000	Frye et al.	D14/138
6,075,470	A	6/2000	Little et al.	341/107
6,112,077	A	8/2000	Spitaletta et al.	455/407
6,128,184	A	10/2000	Ito et al.	361/681
D433,460	S	11/2000	Griffin et al.	D21/329
6,181,954	B1	1/2001	Monroe et al.	455/557
6,219,257	B1	4/2001	Arnold	361/814
D445,428	S	7/2001	Pattenden	D14/488
6,271,605	B1	8/2001	Carkner et al.	307/125
6,278,442	B1	8/2001	Griffin et al.	345/169
6,285,327	B1	9/2001	See	343/702
6,317,315	B1	11/2001	Lee et al.	361/681
6,317,592	B1	11/2001	Campana, Jr. et al.	455/412
6,321,070	B1	11/2001	Clark et al.	455/90
6,352,434	B1	3/2002	Emmert	439/65
6,490,439	B1	12/2002	Croft et al.	455/90
6,496,685	B2	12/2002	Peterzell et al.	455/90
6,594,472	B1	7/2003	Curtis et al.	455/90
6,600,662	B1	7/2003	Emmert et al.	361/814
6,625,030	B1	9/2003	Haixiong	361/737
6,754,507	B2	6/2004	Takagi	455/550.1
6,785,395	B1	8/2004	Arneson et al.	381/334
6,805,998	B2	10/2004	Jenson et al.	429/162
D506,476	S	6/2005	Andre et al.	D14/496
6,920,344	B2	7/2005	Jang	455/575.5
6,933,981	B1	8/2005	Kishida et al.	348/375
6,959,210	B2	10/2005	Nakamura	455/575.3
6,967,280	B1	11/2005	Boatwright et al.	174/35 GC
6,978,165	B2	12/2005	Martinez et al.	455/575.7
7,010,121	B2	3/2006	Wennemer et al.	379/433.01
7,046,230	B2	5/2006	Zadesky et al.	345/156
7,099,709	B2	8/2006	Hsu et al.	455/575.8
7,283,853	B2	10/2007	Kanazawa et al.	455/575.1
7,324,152	B2	1/2008	Yoon	348/360
7,336,228	B2	2/2008	Lu et al.	343/702
7,353,003	B2	4/2008	Boman et al.	455/90.3
7,374,452	B2	5/2008	Kohri et al.	439/500
7,388,616	B2	6/2008	Yamazaki	348/373
7,414,855	B1	8/2008	Arnold	361/752
7,495,659	B2	2/2009	Marriott et al.	345/173
7,499,040	B2	3/2009	Zadesky et al.	345/204
7,515,431	B1	4/2009	Zadesky et al.	361/752
7,522,889	B2	4/2009	Wulff et al.	455/90.3
7,574,672	B2	8/2009	Jobs et al.	715/830
7,627,343	B2	12/2009	Fadell et al.	455/557
7,630,741	B2	12/2009	Siddiqui et al.	455/575.1
7,711,400	B2	5/2010	Nuovo	455/575.8
7,724,532	B2	5/2010	Zadesky et al.	361/752
7,738,656	B2	6/2010	Yoda	379/433.01
7,860,536	B2	12/2010	Jobs et al.	455/566
8,140,133	B2	3/2012	Jung et al.	455/575.3
8,353,824	B2	1/2013	Shelton, IV et al.	600/208
2001/0034242	A1	10/2001	Takagi	455/550
2003/0092468	A1	5/2003	North	455/556
2003/0095656	A1	5/2003	Sommer	379/419
2003/0100275	A1	5/2003	Hsu et al.	455/90
2003/0199290	A1	10/2003	Viertola	455/575.1
2004/0125947	A1	7/2004	Charlier et al.	379/433.07
2004/0204009	A1	10/2004	Cheng et al.	455/550.1
2004/0252220	A1	12/2004	Oda et al.	348/333.06
2004/0253508	A1	12/2004	Kohri et al.	429/100
2005/0140778	A1	6/2005	Kim et al.	348/14.02
2005/0282593	A1	12/2005	Spence et al.	455/575.3
2005/0282594	A1	12/2005	Oldham	455/575.3
2005/0282595	A1	12/2005	Spence et al.	455/575.3
2006/0050169	A1	3/2006	Misawa	348/333.06
2006/0055607	A1*	3/2006	Satoh et al.	343/702
2006/0062624	A1	3/2006	Choi	400/481
2006/0160585	A1	7/2006	Miyagawa et al.	455/575.7
2006/0197863	A1	9/2006	Kim	348/335
2006/0233356	A1	10/2006	Lu et al.	379/433.01
2006/0250490	A1*	11/2006	Silverbrook et al.	347/109
2006/0250627	A1*	11/2006	Silverbrook et al.	358/1.12
2006/0250762	A1*	11/2006	Yang et al.	361/681

FOREIGN PATENT DOCUMENTS

CN	2660807	Y	12/2004
CN	2747799	Y	12/2005
CN	1725783	A	1/2006
CN	2750587	Y	1/2006
EP	1209880	A2	5/2002
EP	1209880	A3	2/2003
EP	1 617 313	A2	1/2005
EP	1496672	A1	1/2005
EP	1533983	A1	5/2005
EP	1496672	A1	1/2006
EP	2472833	A1	7/2012
GB	2 360 972	A	10/2001
GB	2 383 472	A	6/2003
GB	2383472	A	6/2003
GB	2391740	A	2/2004
JP	H-06-026339	U	1/1990
JP	H-07-273685		10/1995
JP	11-331333		11/1999
JP	2000133973		5/2000
JP	2000-156135		6/2000
JP	2001007550	A	1/2001
JP	2001308992	A	11/2001
JP	2002-125031		4/2002
JP	2002-271664		9/2002
JP	2003-274234		9/2003
JP	2003-289358		10/2003
JP	2004-187134		7/2004
JP	2004-222193		8/2004
JP	2004-312300		11/2004
JP	2005-026881		1/2005
JP	2005-286430		10/2005
JP	2005-318064	A	11/2005
JP	2005-341047		12/2005
TW	488610	U	5/2002
WO	WO-95/31048	A1	11/1995
WO	WO 02/054722	A1	7/2002
WO	WO 02/054727	A1	7/2002
WO	WO-2007/110771	A2	10/2007

OTHER PUBLICATIONS

IPod Mini. (Oct. 28, 2013). In *Wikipedia, The Free Encyclopedia*. Retrieved 18:47, Nov. 12, 2013, from http://en.wikipedia.org/w/index.php?title=IPod_Mini&oldid=579128730, 4 pages.

Nokia 9300 specifications, Nokia 9300 announcement: 2004, Nokia 9300 launched 2004-2005, retrieved Nov. 12, 2013 from http://www.gsmarena.com/nokia_9300-881.php, 1 page.

Photographic image of Nokia 9300 with cover removed, Nokia 9300 announcement: 2004, Nokia 9300 launched 2004-2005, 1 page.

Wilson, Tracy V., "How a Blackberry Works", howstuffworks.com, 4 pages, Jan. 2006, retrieved Aug. 26, 2013, 4 pages.

Gabe, "Installing Palm Zire 31 Battery", www.iFixit.com, document generated Aug. 24, 2013, Palm Zire 31 first released Apr. 2004, 6 pages.

Fadell, Tony, "Apple seriously considered building an iPhone with hardware keyboard", MAC Daily News, Apr. 30, 2012, 13 pgs.

"Getting Started", Zire™ 31, Palm One, Inc., 2003, 104 pgs.

"PalmOne Zire 31 Review", Brighthand Smartphone News & Review, Apr. 27, 2004, 4 pgs.

"Repairing TomTom One Back Cover", Fixit, 2003, 4 pgs.

(56) **References Cited**

OTHER PUBLICATIONS

"Sendo M550 Manual, CE0168" Sendo, 2003, 50 pgs.
"User Guide for the Kyocera SoHo Phone", Kyocera 82K5867-1EN, Rev, 002, 2004, 59 pgs.
"Sprint PCS Vision Phone VI-3155i by okia", Sprint PCS® Service, Sprint 2005, 208 pgs.
"The Birth of the iPhone—Excerpt from Jony Ive: The Genius Behind Apple's Greatest Products", Kahney, Leander, Janury 7, 2014, 30 pgs.
"Motomanual V176 GSM", Motorola, 2006, 77 pgs.
Operating Instructions X800 Symbian OS Smartphone, Panasonic, 2005, 194 pgs.
"Meet the Nokia N72: the Multimedia Computer that Looks as Good as It Performs", Press Release, Apr. 2006, 2 pgs.
"Microsoft and Nokia Collaborate to Help Ensure Consumers Can Enjoy Digital Music Anywhere", Press Release, Feb. 14, 2005, 2 pgs.
"Multifuntional Mobiles Make the World Go Round", Press Release, Jun. 6, 2006, 4 pgs.
"Nokia 3250: A music phone with a twist", Press Release, Sep. 27, 2005, 2 pgs.
"Nokia Announces Convergence Devices for Mobile TV and the Digital Home at Nokia Mobility Conference 2005", PRNewswire, Barcelona, Spain, 2005, 3 pgs.
"Nokia Launches Mobile Music Solution for Operators Worldwide", Nexus 5, Feb. 14, 2005, 3 pgs.
"Nokia N90 voted European Media Phone of the Year", Press Release, Aug. 16, 2005, 2 pgs.
"The world's first integrated DVB-H mobile device makes prime time any time", Press Release, Nov. 2, 2005 , 3 pgs.
"Two Nseries multimedia devices receive prestigious commendation from Popular Science magazine", Press Release, Nov. 8, 2005, 3 pgs.
"Part of the Nokia Nseries high performance multimedia range, the Nokia N90 brings Carl Zeiss optics into the mobile arena", Press Release, Apr. 27, 2005, 4 pgs.
Blackberry 857—Enterprise Edition—Blackberry Series Specifications, Blackberry 857 launched Nov. 2000, document retrieved May 30, 2014 from http://www.cnet.com/products/blackberry-857-enterprise-edition-blackberry-series/, 3 pages.
Blackberry 957—Enterprise Edition—Blackberry—5MB Series Specifications, Blackberry 957 launched Nov. 2000, document retrieved May 30, 2014 from http://www.cnet.com/products/blackberry-957-internet-edition-blackberry-series/, 2 pages.
Zire 31. (Dec. 20, 2013). In Wikipedia, The Free Encyclopedia. Retrieved 14:47, May 30, 2014, from http://en.wikipedia.org/w/index.php?title=Zire_31&oldid=586990828, 3 pages.
Zire 72. (Mar. 12, 2013). In Wikipedia, The Free Encyclopedia. Retrieved 14:49, May 30, 2014, from http://en.wikipedia.org/w/index.php?title=Zire_72&oldid=543613308, 3 pages.
Motorola Razr. (May 29, 2014). In *Wikipedia, The Free Encyclopedia*. Retrieved 14:52, May 30, 2014, from http://en.wikipedia.org/w/index.php?title=Motorola_Razr&oldid=610567906, 12 pages.
Jony Ive : the genius behind Apple's greatest products [Summary], Book published Nov. 2013, Summary retrieved May 30, 2014, from http://lcen.loc.gov/2013037927, 2 pages.
Photographic images of iPod Mini with cover removed, iPod Mini announcement: Jan. 6, 2004, iPod Mini released on Feb. 20, 2004, 1 page.
Photographic images of Palm One Zire 31 (front/back, and with cover removed), Palm One Zire 31 released: Apr. 2004, 1 page.
Photographic images of iPod Nano (front/back, and with cover removed), iPod Nano released: Sep. 2005, 1 page.
Photographic images of Nokia 9300 (front/back, and with cover removed), Nokia 9300 announcement: 2004, Nokia 9300 launched 2004-2005, 1 page.
"LG© LX-225 Phone Guide", LG Life's Good, 2004, 208 pgs.
"i560 Phone User's Guide", Motorola iDEN Digital Multi-service Data-capable Phone, 2005, 155 pgs.
"Motorola V3 GSM User Guide", 2005, 34 pgs.
"Motorola V3-RAZR Repair Manual", Apr. 2005, 33 pgs.
"Nokia 3155 Use Guide", 2005, 95 pgs.
"Nokia 3155, Nokia 3155i, and Nokia 3152 User Guide", 2005, 201 pgs.
"Nokia 6101 and Nokia 6102 User Guide", 2005, 87 pgs.
"Nokia USA Launches 3155 CDMA Folder", Oryl, Michael, Mar. 15, 2005, 1 pgs.
"02X3™-How to use it", 02 (UK) Limited, Aug. 2004, 125 pgs.
"02X4™-How to use it", 02 (UK) Limited, Mar. 2005, 118 pgs.
"Nokia 3155/3155i, 3152 (RM-61) Schematics—Main PWB, Version 1, Edit 247", Nokia Customer Care, 2005, 30 pgs.
"And Then Steve Said, 'Let there Be an iPhone'", The New York Times, Oct. 4, 2013, 12 pgs.
"BT Zenith Flip-Issue 1-Edition 04, User Guide", Aug. 9, 2005, 88 pgs.
"User Guide for the Kyocera Candid KX16 Phone, 82-N8302-1EN, Rev.001", Kyocera Wireless Corp., 2005, 64 pgs.
"Digital Wireless Telephone User's Guide", Motorola, 2002, 106 pgs.
"Handbook for Palm™ Zire™ Handheld" , Palm Inc., 2002, 208 pgs.
"Handsets look to eclipse cameras", BBC News, Jun. 6, 2006, 2 pgs.
"Hands-on with Motorola's RAZR V3 for Cingular", Nelson, Adam, Engadget, Dec. 6, 2004, 10 pgs.
"How a BlackBerry Works", Wilson, Tracy V., http://electronics.howstuffworks.com/blackberry.htm/printable, Jan. 7, 2014, 4 pgs.
"i930 Phone User's Guide", Nextel iDEN Digital Multi-serice Data-capable Phone, Microsoft, 2005, 194 pgs.
"C3300 User Guide CE0168", LG Life's Good, Feb. 20, 2005, 99 pgs.
"User Guide for the Kyocera Milan KX9B/KX9C Phones 82-N8274-1EN, Rev. 002", Kyocera, 2005, 63 pgs.
Google Inc.'s Notice of Prior Art (Shamita D. Etienne-Cummings et al.) [including Certificate of Service], Investigation No. 337-TA-885, Dec. 24, 2013 (38 pgs.).
Complainants Nokia Corporation and Nokia Inc.'s Responsive Claim Construction Brief (M. Scott Stevens et al.) [including Exhibits 1-36 and Certificate of Service], Investigation No. 337-TA-885, Sep. 23, 2013 (983 pgs.).
Complainants' Nokia Corporation, Nokia Inc.'s Opening Claim Construction Brief (Jonas R. McDavit et al.) [including Exhibits 1-29 and Certificate of Service], Investigation No. 337-TA-885, Sep. 16, 2013 (787 pgs.).
Respondents HTC Corp. and HTC America, Inc.'s Responsive Claim Construction Brief, Investigation No. 337-TA-847, executed Jan. 8, 2013 (17793 pgs.).
Redacted copy of Respondents HTC Corporation's and HTC America, Inc.'s (1) Initial Supplemental Responses to Complainants' Contention Interrogatories to HTC (Nos. 9, 11, 12, 14, 52, and 53) and (2) Initial Objections and Responses to Complainants' Contention Interrogatories to HTC (Nos. 54-56) (Paul C. Goulet et al.) [including Certificate of Service], Investigation No. 337-TA-885, Oct. 11, 2013 (11 pgs.).
Proposed Constructions for Claim Terms of U.S. Pat. No. 6,035,189, U.S. Pat. No. 6,373,345, U.S. Pat. No. 6,711,211, U.S. Pat. No. 7,187,945, U.S. Pat. No. 8,140,650, U.S. Pat. No. 8,363,824, and U.S. Pat. No. 7,366,529' (Paul C. Goulet et al.) [including Declaration of lain Richardson (with Exhibits A, B) and Certificate of Service], Investigation No. 337-TA-885, Sep. 9, 2013 (35 pages).
Complainants Nokia Corporation and Nokia Inc.'s Proposed Claim Constructions and Identification of Extrinsic Evidence (Jonas R. McDavit et al.) [including Proposed Claim Constructions and Identification of Extrinsic Evidence and Certificate of Service], Investigation No. 337-TA-885, Sep. 9, 2013 (12 pages).
Joint Claim Construction Chart (Jonas R. McDavit et al.) [including Joint Claim Construction Chart and Certificate of Service], Investigation No. 337-TA-885, Sep. 13, 2013 (15 pages).
HTC Corporation, HTC America, Inc., and Google Inc.'s Initial Claim Construction Brief for U.S. Pat. No. 6,035,189; U.S. Pat. No. 6,711,211; and U.S. Pat. No. 8,140,650 (Shamita D. Etienne-

(56) **References Cited**

OTHER PUBLICATIONS

Cummings et al.) [including Exhibits 1-11 and Certificate of Service], Investigation No. 337-TA-885, Jan. 8, 2013 (255 pages).
Respondents' Initial Markman Brief Regarding Disputed Claim Terms in U.S. Pat. No. 6,373,345, 7,187,945, 8,363,824, and 7,366,529 (Paul C. Goulet et al.) [including Exhibits 1-24 and Certificate of Service], Investigation No. 337-TA-885, Sep. 16, 2013 (400 pages).
Google Inc.'s Initial Claim Construction Brief (Shamita D. Etienne-Cummings et al.) [including Exhibits 1-32 and Certificate of Service], Investigation No. 337-TA-847, Dec. 20, 2012 (690 pages).
Respondents HTC Corp. and HTC America, Inc's, Opening Claim Construction Brief (Blair M. Jacobs et al.) [including Exhibits 1-19 and Certificate of Service], Investigation No. 337-TA-847, Dec. 20, 2012 (371 pages).
Complainants' Nokia Corporation, Nokia Inc., and Intellisync Corporation, Opening Claim Construction Brief (Jason Berrebi et al.) [including Exhibits A-D and Certificate of Service], Investigation No. 337-TA-847, Dec. 20, 2012 (106 pages).
Complainants' Nokia Corporation, Nokia Inc., and Intellisync Corporation Responsive Claim Construction Brief (Jason Berrebi et al.) [including Certificate of Service], Investigation No. 337-TA-847, Jan. 8, 2013 (48 pages).
Exhibit C-1: Invalidity of U.S. Pat. No. 8,363,824 in light of U.S. Pat. No. 7,515,431 to Stephen P. Zadesky, et al. ("Zadesky"), HTC Corp. And HTC America, Inc., Oct. 11, 2013, 11 pages.
Exhibit C-2: Invalidity of U.S. Pat. No. 8,363,824 in light of U.S. Pat. No. 7,336,228 to Lin Lu, et al. ("Lu") , HTC Corp. and HTC America, Inc., Oct. 11, 2013, 8 pages.
Exhibit C-3: Invalidity of U.S. Pat. No. 8,363,824 in light of United States Patent Application Publication No. US 2005/0282593 to Michael F. Spence, et al. ("Spence"), HTC Corp. and HTC America, Inc., Oct. 11, 2013, 8 pages.
Exhibit C-4: Invalidity of U.S. Pat. No. 8,363,824 in light of PalmOne Zire 31 and U.S. Pat. No. 7,366,228 to Lu, HTC Corp. and HTC America, Inc., Oct. 11, 2013, 11 pages.
Exhibit C-5: Invalidity of U.S. Pat. No. 8,363,824 in light of Apple iPod Nano (1st Generation), HTC Corp. and HTC America, Inc., Oct. 11, 2013, 11 pages.
Exhibit C-6: Invalidity of U.S. Pat. No. 8,363,824 in light of Apple iPod Mini (1st Generation), HTC Corp. and HTC America, Inc., Oct. 11, 2013, 9 pages.
Exhibit C-7: Invalidity of U.S. Pat. No. 8,363,824 in light of Nokia 9300, HTC Corp. and HTC America, Inc., Oct. 11, 2013, 13 pages.
Exhibit C-8: Invalidity of U.S. Pat. No. 8,363,824 in light of Blackberry 857, HTC Corp. and HTC America, Inc., Oct. 11, 2013, 11 pages.
Respondents' Rebuttal Markman Brief Regarding Disputed Claim Terms in U.S. Pat. No. 6,373,345; 7,187,945; 8,363,824; and 7,366,529 (Paul C. Goulet et al.) [including Exhibits 1-34 and Certificate of Service], Investigation No. 337-TA-885, Sep. 23, 2013 (548 pages).
HTC Corp., HTC America, Inc., and Google Inc.'s Rebuttal Claim Construction Brief for U.S. Pat. No. 6,035,189, U.S. Pat. No. 6,711,211, and U.S. Pat. No. 8,140,650 529 (Shamita D. Etienne-Cummings et al.) [including Exhibits 1-11, 16-19 and Certificate of Service], Investigation No. 337-TA-885, Sep. 23, 2013 (281 pages).
Proposed Terms for Claim Construction of U.S. Pat. No. 6,035,189, U.S. Pat. No. 6,373,345, U.S. Pat. No. 6,711,211, U.S. Pat. No. 7,187,945, U.S. Pat. No. 8,140,650, U.S. Pat. No. 8,363,824 and U.S. Pat. No. 7,366,5291 (Paul C. Goulet et al.) [including Certificate of Service], Investigation No. 337-TA-885, Sep. 23, 2013 (7 pages).
"A high-impedance ground plane applied to a cellphone handset geometry", Broas, R.F.J.,et al., IEEE, vol. 49, Issue 7, Jul. 2001, pp. 1262-1265.

* cited by examiner

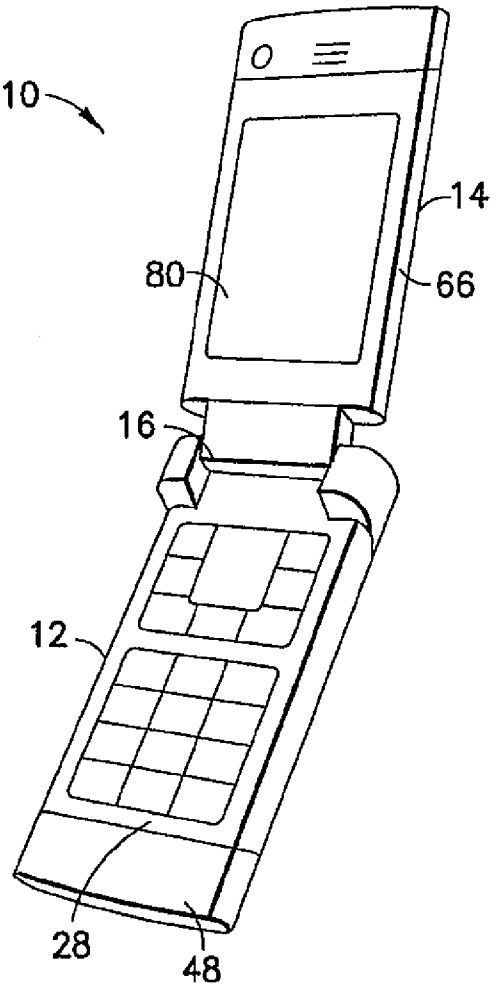

FIG.1

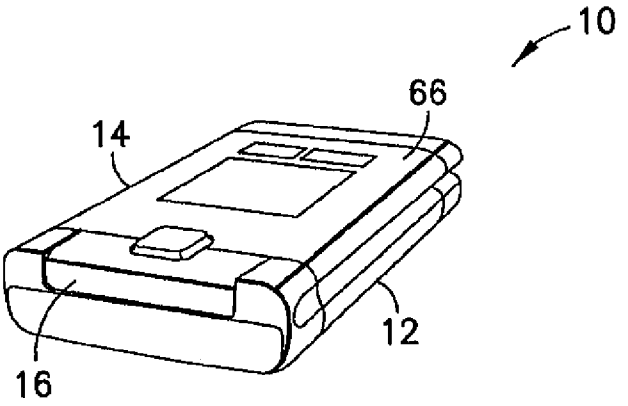

FIG.2

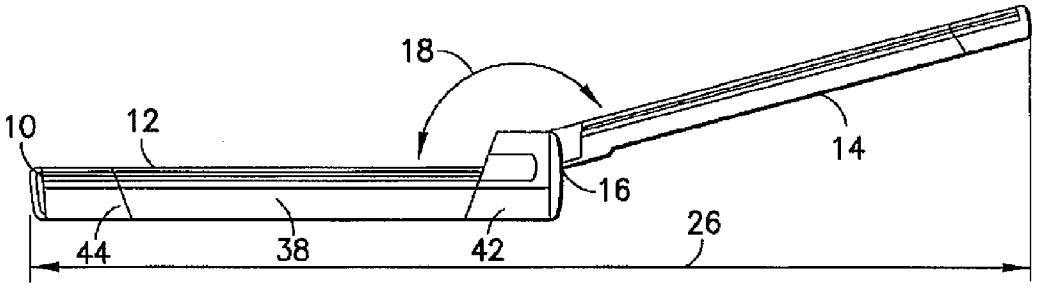

FIG.3

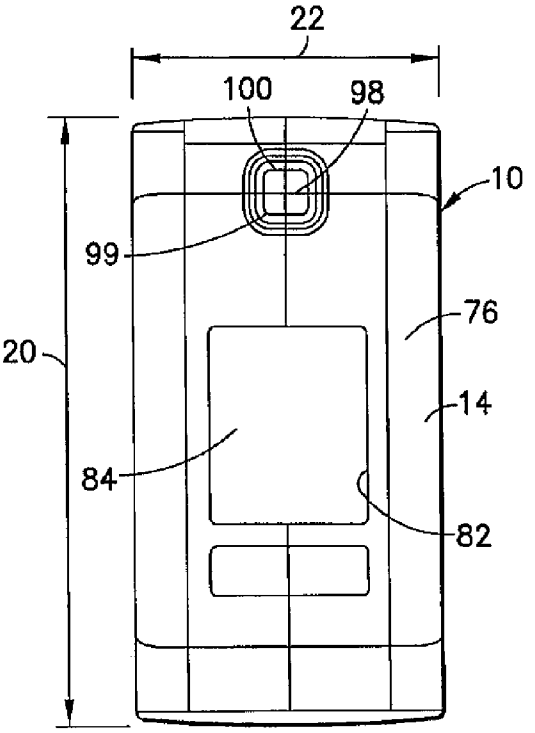

FIG.4

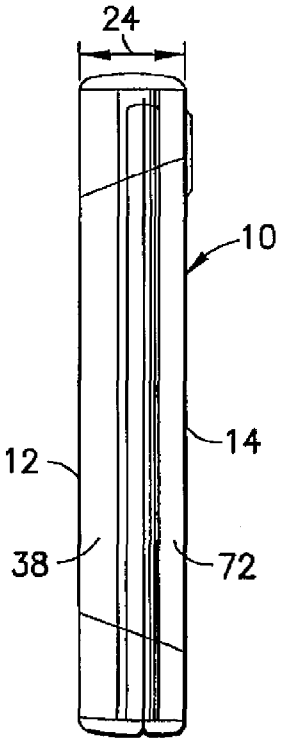

FIG.5

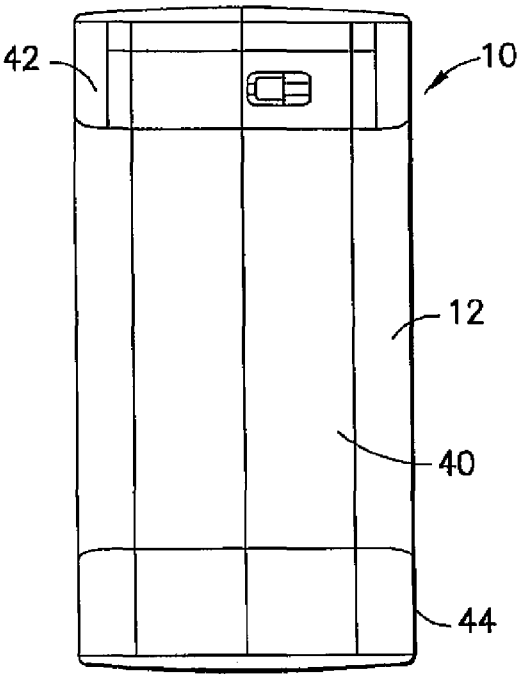

FIG.6

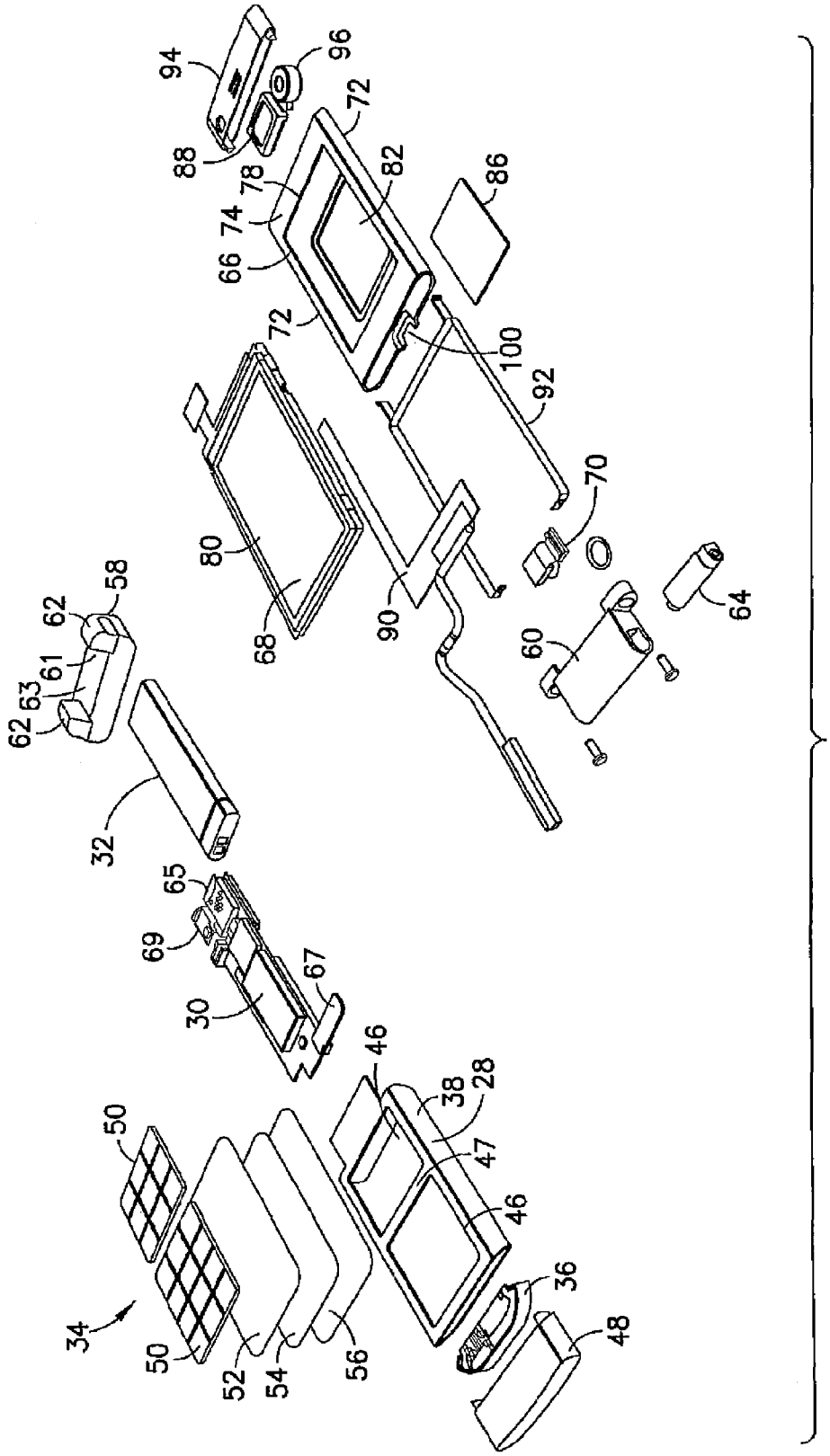
94
96
72
88
78
82
86
74
66
72
100
92
70
80
90
64
60
58
62
61
63
62
68
32
65
69
67
30
46
38
28
50
47
46
36
34
50
52
54
56
48

FIG. 7

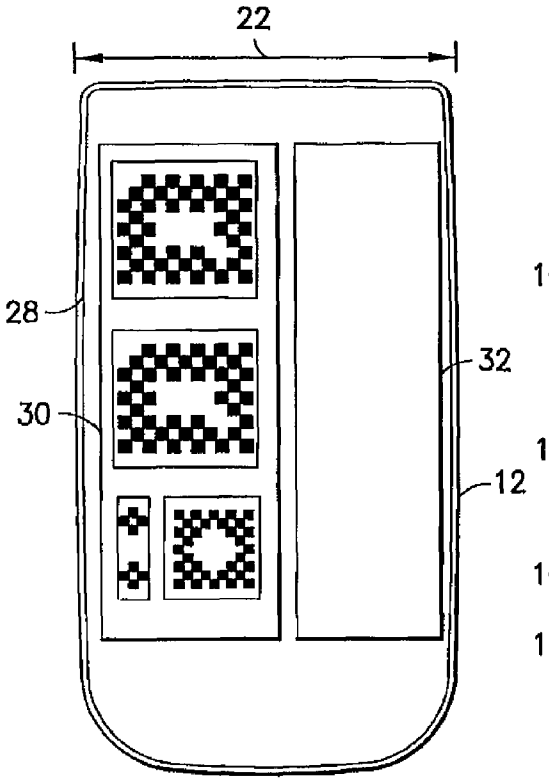

FIG.8

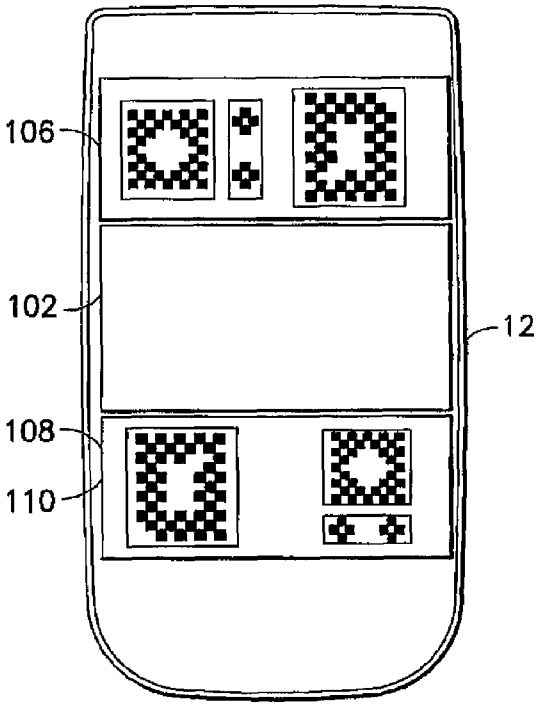

FIG.10

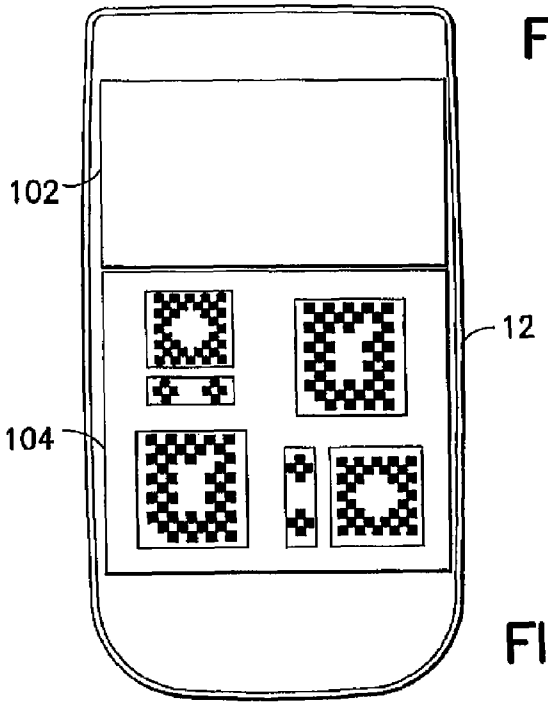

FIG.9

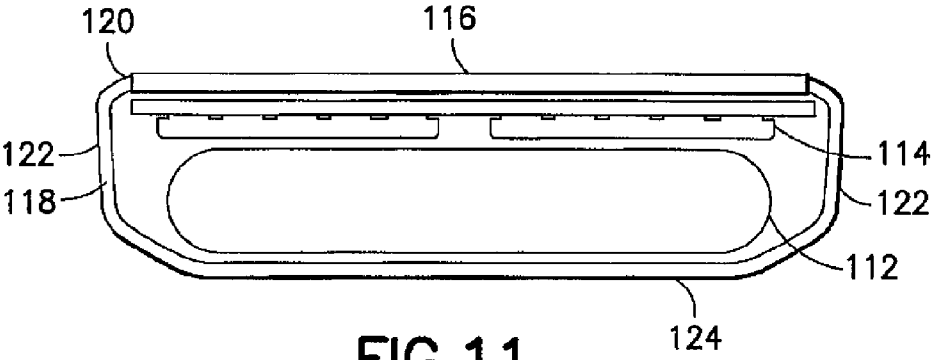

FIG.11

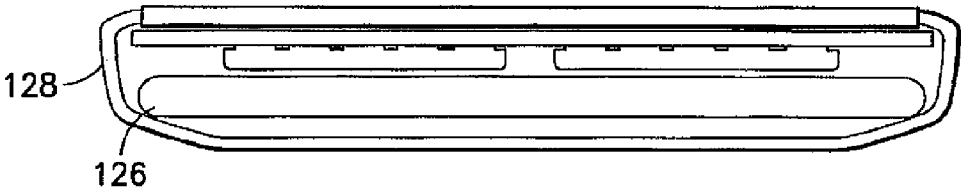

FIG.12

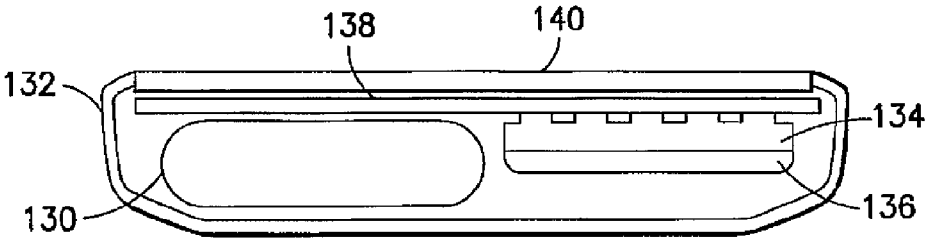

FIG.13

PORTABLE ELECTRONIC DEVICE

CROSS REFERENCE TO RELATED APPLICATION

This is a continuation patent application of U.S. patent application Ser. No. 14/067,249 filed Oct. 30, 2013, which is a continuation patent application of U.S. patent application Ser. No. 13/741,781 filed Jan. 15, 2013, which is a continuation patent application of U.S. patent application Ser. No. 12/860,234 filed Aug. 20, 2010, now U.S. Pat. No. 8,363,824, which is a continuation patent application of U.S. patent application Ser. No. 11/393,510 filed Mar. 29, 2006, now U.S. Pat. No. 7,787,618.

BACKGROUND OF THE INVENTION

1. Field of the Invention

The invention relates to a portable electronic device and, more particularly, to form factor configuration of a portable electronic device.

2. Brief Description of Prior Developments

Ultra thin telephone products have emerged in the market, pioneering a new approach in mechanical architecture for flip-phone designs (also known a clam-shell handset). Priority for these products is mechanical thinness, allowing the feature set and industrial design to be adjusted to suit this goal. New flip-phones include the Motorola RAZR, the Motorola V3, the Motorola V3x, the Samsung SCH-V740, the NEC L1. For example, the Motorola RAZR has a thickness of about 0.54 inch. Candy-bar shaped mobile phones can have smaller thicknesses, such as the Motorola SLIVR with a thickness of about 0.45 inch and the Motorola SCALPEL with a thickness of about 0.25 inch.

There is a desire for an architecture for an ultrathin fold product, such as a flip-phone style of mobile telephone, which can maintain aesthetic balance in proportions, and allow added thickness to avoid a "squeezed" appearance as seen with the RAZR™ mobile telephone.

SUMMARY OF THE INVENTION

In accordance with one aspect of the invention, a portable electronic apparatus is provided comprising a first section comprising electronics; a second section movably connected to the first section by a hinge section, wherein the second section comprises a display; and an access entry provided in the hinge section adapted to allow insertion of an electrical device through the hinge section and into electrical connection with an electrical connector inside the first section.

In accordance with another aspect of the invention, a portable electronic device is provided including a first section, a second section and a connecting section. The first section has a user input section and a first tubular housing member. The first tubular housing member forms a majority of opposite exterior lateral sides of the first section. The second section has a display and a second tubular housing member. The second tubular housing member forms a majority of opposite exterior lateral sides of the second section. The connecting section movably connects the second section with the first section. The first tubular housing member at least partially houses the user input section. The second tubular housing member at least partially houses the display.

In accordance with another aspect of the invention, a mobile telephone is provided comprising an engine section comprising a printed circuit board, a transceiver, a processor and a memory; a battery located adjacent the engine section; and a user input section comprising a keypad located directly above the engine section and the battery. The user input section is located directly opposite the battery without a portion of the engine section therebetween.

In accordance with another aspect of the invention, a portable electronic device is provided comprising a first section; a second section movably connected to the first section by a hinge; and a camera. The hinge comprises a first hinge member connected to the first section and a second hinge member connected to the second section. The camera is connected to the second section. The camera is housed at an exterior side of the portable electronic device by a junction of a portion of the second hinge member and a portion of an exterior housing of the second section.

BRIEF DESCRIPTION OF THE DRAWINGS

The foregoing aspects and other features of the invention are explained in the following description, taken in connection with the accompanying drawings, wherein:

FIG. **1** is a perspective view of a mobile telephone comprising features of the invention;

FIG. **2** is a perspective view of the telephone shown in FIG. **1** is a closed configuration;

FIG. **3** is a side view of the telephone shown in FIG. **1**;

FIG. **4** is a front view of the telephone shown in FIG. **2**;

FIG. **5** is a side view of the telephone shown in FIG. **2**;

FIG. **6** is a rear view of the telephone shown in FIG. **2**;

FIG. **7** is an exploded perspective view of the telephone shown in FIGS. **1-6**;

FIG. **8** is a schematic view showing the layout of the engine and the battery of the telephone shown in FIGS. **1-7**;

FIG. **9** is a schematic view similar to FIG. **8** showing an alternate embodiment of the layout of the engine and the battery;

FIG. **10** is a schematic view similar to FIG. **8** showing another alternate embodiment of the layout of the engine and the battery;

FIG. **11** is a schematic view showing an alternate embodiment of the layout of the engine and the battery;

FIG. **12** is a schematic view similar to FIG. **11** showing an alternate embodiment of the layout of the engine and the battery; and

FIG. **13** is a schematic view similar to FIG. **11** showing an alternate embodiment of the layout of the engine and the battery.

DETAILED DESCRIPTION OF THE PREFERRED EMBODIMENTS

Referring to FIG. **1**, there is shown a perspective view of a portable electronic device **10** incorporating features of the invention. Although the invention will be described with reference to the exemplary embodiments shown in the drawings, it should be understood that the invention can be embodied in many alternate forms of embodiments. In addition, any suitable size, shape or type of elements or materials could be used.

In the embodiment shown, the device **10** comprises a hand-held mobile telephone. However, in alternate embodiments, features of the invention could be used in other types of portable electronic devices, such as a PDA or a hand-held gaming device for example. The telephone **10** is a flip-phone type of telephone comprising a first section **12** connected to a second section **14** by a movably connecting section **16**. In this embodiment the connecting section **16** is a hinge.

However, in alternate embodiments, any suitable type of movable connecting section could be provided. FIG. **1** shows the telephone **10** in an open configuration. FIG. **2** shows the telephone **10** in a closed configuration.

Referring also to FIGS. **3-6**, in the closed configuration, the second section **14** lies directly opposite the first section **12**. The hinge **16** allows the second section **14** to pivot open to the open configuration at an angle **18** of about 165°. However, in alternate embodiments, the angle **18** could have any suitable angle. In the closed configuration, the telephone has a height **20** of about 88.7 mm, a width **22** of about 45 mm, and a thickness **24** of about 15 mm. In the open configuration, the telephone has a length **26** of about 166 mm. However, in alternate embodiments, any suitable dimensions could be provided. As seen with reference to FIG. **3**, the design shown has a substantially uniform thickness lower section **12** and a substantially uniform thickness upper section **14** along their entire lengths except for at the hinge **16**. As seen best in FIGS. **5** and **14**, when the two sections **12**, **14** are closed, the telephone **10** has a block shape with grooves along the joints at the lateral sides, but with the ends of the sections **12**, **14** being at the same bottom end of the closed shape.

Referring also to FIG. **7**, there is shown an exploded perspective view of the telephone **10** for details of how the small thickness **24** of about only 15 mm in a flip-phone design can be accomplished. The first section generally comprises a first housing member **28**, an engine **30**, a battery **32**, a user input section **34**, and an antenna module **36**. Additional components could be provided. The first housing member **28** generally comprises a one-piece tubular member. In a preferred embodiment, the tubular member is comprises of metal, such as aluminum for example. In one type of embodiment, the tubular metal member could be formed from an extruded member with holes punched into it after it is extruded. The first housing member **28** forms a majority of opposite exterior lateral sides **38** and a rear side **40** of the first section **12** (except at top and bottom ends **42**, **44** of the first section). The front side of the first housing member **28** has holes **46** therethrough for portions of the user input section **34** to be located in the holes. Because of the tubular shape of the first housing member **28**, the first housing member **28** has substantially open top and bottom apertures, which are slanted in the embodiment shown.

The antenna module **36** is located at the bottom aperture into the first housing member **28** and enclosed by the antenna cover **48**. The antenna cover **48**, such as made of plastic, is attached to the first housing member **28** at the bottom aperture to keep the antenna module **36** attached to the rest of the telephone. In one type of embodiment, the antenna module could be a STINGRAY antenna from Ray-Sat, Inc. However, any suitable antenna module could be provided.

The user input section generally comprises keymats **50**, an EL backlight foil **52**, a keymat dome sheet **54** and a keymat stiffener **56**. However, in alternate embodiments, any suitable user input section could be provided. The keymats **50** are located in the holes **46** of the first housing member **28**. The other components of the user input section are located inside the first housing member **28**. A cross bar portion **47** of the first housing member **28** is located between the two keymats **50**.

The engine **30** generally comprises a printed circuit board, a transceiver, a processor, and a memory, among other components. Referring also to FIG. **8**, the width of the engine **30** is only about less than half the width **22** of the telephone. The battery **32** is located adjacent the lateral side of the engine **30** and is also about less than half the width **22** of the telephone. Unlike conventional telephones which have the engine located above the battery, the configuration of the side-by-side engine/battery allows the battery and the engine to have a practical design thickness and still provide a reduced thickness **24** as compared to conventional flip-phones. The keypads are located above the engine section **30** and the battery **32**, wherein the user input section **34** is located directly opposite the battery **32** without a significant portion of the engine section **30** therebetween.

The connecting section **16** has a first hinge member **58** and a second hinge member **60**. The first hinge member **58** is connected to the top end of the first frame member **28** to substantially close the open top end of the first frame member **28**. The first hinge member **58** also comprises a door **61** for access to the battery **32** such that the battery can be removed, and a door **63** for access to the engine **30** for inserting and removing an electronic module **65**, such as a SIM card or flash memory or other memory card. The doors **61**, **63** are located below the shoulders **62** such that there is a path at the connecting section **16** past the second hinge member **60**. In an alternate embodiment, the connecting section **16** could have only one door; for the battery or for the electronic module or both. The door(s) is preferably connected to the rest of the first hinge member **58** by a living hinge. However, in alternate embodiments any suitable type of doorway system could be provided. In other alternate embodiments any suitable access entry could be provided. In a preferred embodiment the door(s) support the electronic device (such as the battery **32** and/or electronic module **65**). The engine **30** comprises electrical connectors **67** and **69** for the electronic devices **32** and **65** to connect to inside the first section **12**.

The first hinge member **58** has shoulders **62** with interior facing apertures to receive ends of the hinge module **64**. The hinge module **64** is mounted in the second hinge member **60**. The second hinge member **60** is sized and shaped to pivotably fit between the shoulders **62**. In an alternate embodiment any suitable type of hinge assembly could be provided, such as disclosed in U.S. Pat. No. 6,900,981, and U.S. patent application Ser. Nos. 10/610,978, 11/055,914, 11/077,674, and 11/253,017, for example, which are hereby incorporated by reference in their entireties. In an alternate embodiment, the electronic device insertion and removal feature through a movable, connection section of the invention could be used in other types of telephones having movable sections including, for example, a slide phone such as shown in U.S. Pat. No. Des. 427,171 which is hereby incorporated by reference in its entirety, or could be used in other apparatus, such as a gaming device or PDA having two movable sections connected by a hinge or connecting section.

The second section **14** generally comprises a second housing member **66**, a display module **68** and a camera **70**. The second housing member **66** preferably comprises a one-piece member having a general tubular shape. In a preferred embodiment, the tubular member is comprises of metal, such as aluminum for example. In one type of embodiment, the tubular metal member could be formed from an extruded member with holes punched into it after extrusion. The second housing member **66** forms portions of opposite exterior lateral sides **72**, a front side **74** and a rear side **76** of the second section **14**. The front side of the second housing member **66** has a hole **78**. A front portion **80** of the display module **68** can be located for viewing through the hole **78**. The rear side of the second housing member **66** has a hole **82** therethrough. A rear portion **84** (see FIG. **4**) of the display module **68** is located for viewing through the hole

82. Front portion **80** forms a main display, and rear portion **84** forms a sub-display. A window **86** can be glued onto the sub-display **84**. Because of the tubular shape of the second housing member **66**, the second housing member **66** has substantially open top and bottom apertures, which are slanted in the embodiment shown.

The display module **68**, camera **70** and a speaker or sound transducer **88** are coupled to the engine **30** by a flex cable assembly **90** which extends through the hinge **16**. A mounting bracket **92** is provided for mounting the display module **68** inside the second housing member **66** between the second hinge member **60** and a speaker cover **94** at opposite ends of the second housing member **66**. An optional second camera **96** could also be provided.

The camera **70** extends to the rear side **76** of the second section **14**. The camera **70** is housed at an exterior side of the portable electronic device by a junction **98** of a cutout portion **99** of the second hinge member **60** and a cutout portion **100** of the second tubular housing member **66**. The cutout portions **99**, **100** project slightly from the rear side of the telephone to form a protrusion **142** (see FIG. **14**). By providing a projecting portion of the housing for the camera, rather than making the housing flush with the camera, this allows the rest of the telephone to have the reduced thickness **24**, but still use a standard size camera.

Referring also to FIGS. **9-10**, alternate embodiments of configuration of the battery relative to the engine of FIG. **8** is shown. FIG. **10** shows an embodiment where the battery **102** and engine **104** are located in the first section **12** in a side-by-side configuration. This side-by-side configuration comprises the battery **102** being located at a top side of the engine **104** proximate the hinge end of the first section. FIG. **11** shows an embodiment where the battery **102** is located between two portions **106**, **108** of the engine **110**. Thus a split side-by-side configuration is provided. In both of these alternate embodiments the keypad is located above the engine section and the battery, wherein the user input section is located directly opposite the battery without a substantial portion of the engine section therebetween.

FIGS. **11-13** show other alternate embodiments of positioning the battery relative to the engine. In FIG. **11** the battery **112** is located below the engine **114**. The keypad **116** is located above the engine **114**. The components **112**, **114**, **116** are housed in a one-piece metal tubular housing member **118**. The keypad is located at a hole through the front side **120** of the housing member **118**. Otherwise, the housing member **118** forms enclosed lateral exterior sides **122** and rear side **124**.

FIG. **12** shows an embodiment similar to FIG. **11**. However, in this embodiment the battery **126** is thinner and wider than the battery **112**. The tubular housing member **128** is thinner and wider than the tubular housing member **118**. FIG. **13** shows another alternate embodiment. In this embodiment the battery **130** is about half the width of the tubular housing member **132**. The engine **134** comprises a portion **136** located at the lateral side of the battery **130** and another portion **138** located between the battery and the keypad **140**. The configurations shown in FIGS. **11-13** could be used in candy-bar style telephone handsets as well as flip-phone style handsets.

One of the features of the invention is the use of tubular members to form the major housing components of the first and second sections of the flip-phones. The tubular housing members provide an increased strength than conventional housing designs. This allows the reduction in side of the housing components versus conventional housing components and, thus, a reduction in the thickness **24** of the telephone. In addition, the side-by-side positioning of the battery/engine can further allow a reduction in thickness of the handset versus conventional stacked battery/engine handsets.

With the present invention a user exchangeable battery and/or cards (SIM, flash and other memory cards) can be inserted and removed through the hinge end in a portable terminal. The housing of a fold phone can be extruded in one material. Extruding a housing in one material and having a user exchangeable battery (and cards) through a hinge end can be provided. With the invention a battery can be located next to the PWB on a lateral side of the phone.

It should be understood that the foregoing description is only illustrative of the invention. Various alternatives and modifications can be devised by those skilled in the art without departing from the invention. Accordingly, the invention is intended to embrace all such alternatives, modifications and variances which fall within the scope of the appended claims.

What is claimed is:

1. A portable electronic device comprising:

a one piece housing forming enclosed exterior lateral sides and a rear side;

a cut out in the rear side of said housing;

a camera located in said housing and extending to said cut out at said rear side;

an engine section comprising a printed circuit board, a transceiver, a processor and a memory;

a user input section located above the engine section and a battery, wherein the user input section is located adjacent the battery and the engine section;

wherein the battery and engine section are housed in the housing and the user input is located in an opening between said exterior lateral sides of said one piece housing of the portable electronic device.

2. A portable electronic device according to claim **1** wherein said one piece housing has a front side extending from and between the lateral sides.

3. A portable electronic device according to claim **2** wherein the front side extends parallel to the lateral edges.

4. A portable electronic device according to claim **3** wherein the front side forms at least a side of the opening through which the input device is located.

5. A portable electronic device according to claim **1** wherein the user input and a front side of the housing lie in a side by side arrangement.

6. A portable electronic device according to claim **1** wherein the one piece housing and the user input form a continuous surface of the portable electronic device.

7. A portable electronic device according to claim **6** further comprising a bracket wherein the user input section and the one piece housing define an interior volume and the bracket is configured to support said user input section.

8. A portable electronic device to claim **1** wherein the battery is located adjacent the engine section in a side by side arrangement.

9. A portable electronic device according to claim **1** further comprising a cut out portion wherein the cut out portion projects from the rear side of the housing.

10. A portable electronic device according to claim **9** where the camera is partially located in the cut out portion.

11. A portable electronic device according to claim **1** further comprising a door configured to support an electronic module.

12. A portable electronic device according to claim **11** wherein the electronic module is configured to interface to the engine section.

13. A portable electronic device according to claim 1 further comprising a second camera located on a front side of the portable electronic device.

14. A portable electronic device according to claim 1 wherein the user input section is located directly adjacent the battery and the engine section.

15. A housing for a portable electronic device comprising:

a one piece housing forming enclosed exterior lateral sides and a rear side;

a cut out in the rear side of said housing, said cut out configured to receive at least part of a camera;

wherein the housing is configured to receive a battery and an engine section, wherein a user input is located in an opening between said exterior lateral sides of said one piece housing of the portable electronic device, wherein the battery and engine section are configured to be housed in the housing such that the user input section is located above the engine section and the battery, and wherein the user input section is located adjacent the battery and the engine section.

16. A housing for a portable electronic device according to claim 15 further comprising:

a front side extending between the lateral edges, said lateral sides and front side forming a aperture configured to receive the user input wherein the user input and the front side of the housing form a continuous front surface of the portable electronic device.

17. A housing according to claim 15 wherein the one piece housing has been extruded.

18. A housing according to claim 15 wherein the one piece housing comprises a metal.

19. A housing according to claim 15 wherein the housing has substantially at least one of an open top or bottom aperture.

20. A housing according to claim 19 wherein a antenna module is located at a aperture in the housing.

21. A housing according to claim 20 wherein the antenna module is enclosed by a antenna cover.

22. A mobile phone comprising:

a one piece housing of the mobile phone forming enclosed exterior lateral sides and a rear side of the mobile phone;

a cut out in the rear side of said housing;

a camera located in said housing and extending to said cut out at said rear side;

an engine section comprising a printed circuit board, a transceiver, a processor and a memory;

a user input section located above the engine section and a battery, wherein the user input section is located adjacent the battery and the engine section;

wherein the battery and engine section are housed in the housing and the user input is located in an opening between said exterior lateral sides of said one piece housing of the mobile phone.

23. A mobile phone according to claim 22 wherein said one piece housing has a front side extending from and between the lateral sides.

24. A mobile phone according to claim wherein the front side extends parallel to the lateral edges.

25. A mobile phone according to claim 24 wherein the front side forms at least a side of the opening through which the input device is located.

26. A mobile phone according to claim 22 wherein the user input and a front side of the housing lie in a side by side arrangement.

27. A mobile phone according to claim 22 wherein the one piece housing and the user input form a continuous surface of the mobile phone.

28. A mobile phone according to claim 27 further comprising a bracket wherein the user input section and the one piece housing define an interior volume and the bracket is configured to support said user input section.

29. A mobile phone according to claim 22 wherein the battery is located adjacent the engine section in a side by side arrangement.

30. A mobile phone according to claim 22 further comprising a cut out portion wherein the cut out portion projects from the rear side of the housing.

31. A mobile phone according to claim where the camera is partially located in the cut out portion.

32. A mobile phone according to claim 22 further comprising a second camera on a front side of the mobile phone.

33. A mobile phone according to claim further comprising a door configured to support an electronic module.

34. A mobile phone according to claim 33 wherein the electronic module is configured to interface to the engine section.

35. A mobile phone according to claim 22 wherein the user input section is located directly adjacent the battery and the engine section.

36. A mobile phone according to claim 22 wherein the transceiver is a mobile phone transceiver.

* * * * *