US 20120194997A1

(19) United States

(12) Patent Application Publication

MCCLURE et al.

(10) Pub. No.: US 2012/0194997 A1

(43) Pub. Date: Aug. 2, 2012

(54) COMPONENT ASSEMBLY

(75) Inventors: **Stephen Robert MCCLURE**, San Francisco, CA (US); **Sean S. Corbin**, San Jose, CA (US); **John P. Ternus**, Redwood City, CA (US); **Kevin Gibbs**, Menlo Park, CA (US); **Jeremy C. Franklin**, San Francisco, CA (US); **Elvis Mwenda Kibiti**, San Francisco, CA (US); **Jules B. Henry**, Palo Alto, CA (US); **Benjamin M. Rappoport**, San Francisco, CA (US); **Erik Andrew Uttermann**, Cupertino, CA (US); **Alex Chun Lap Yeung**, South San Francisco, CA (US); **John Raff**, Menlo Park, CA (US); **Carl Peterson**, Santa Clara, CA (US); **Brianna C. Wilson**, East Palo Alto, CA (US)

(73) Assignee: **APPLE INC.**, Cupertino, CA (US)

(21) Appl. No.: **13/018,153**

(22) Filed: **Jan. 31, 2011**

Publication Classification

(51) **Int. Cl.**
H05K 7/02 (2006.01)
H05K 13/04 (2006.01)

(52) **U.S. Cl.** **361/679.55**; 29/592.1

(57) **ABSTRACT**

A portable computing device is disclosed. The portable computing device can take many forms, such as a laptop computer, a tablet computer, and so on. The portable computing device can include at least a single piece housing with a cavity having a substantially flat bottom wall. A battery assembly and main logic board can be mounted directly to the substantially flat bottom wall with a plurality of additional components arranged around a peripheral edge of the battery assembly and main logic board.

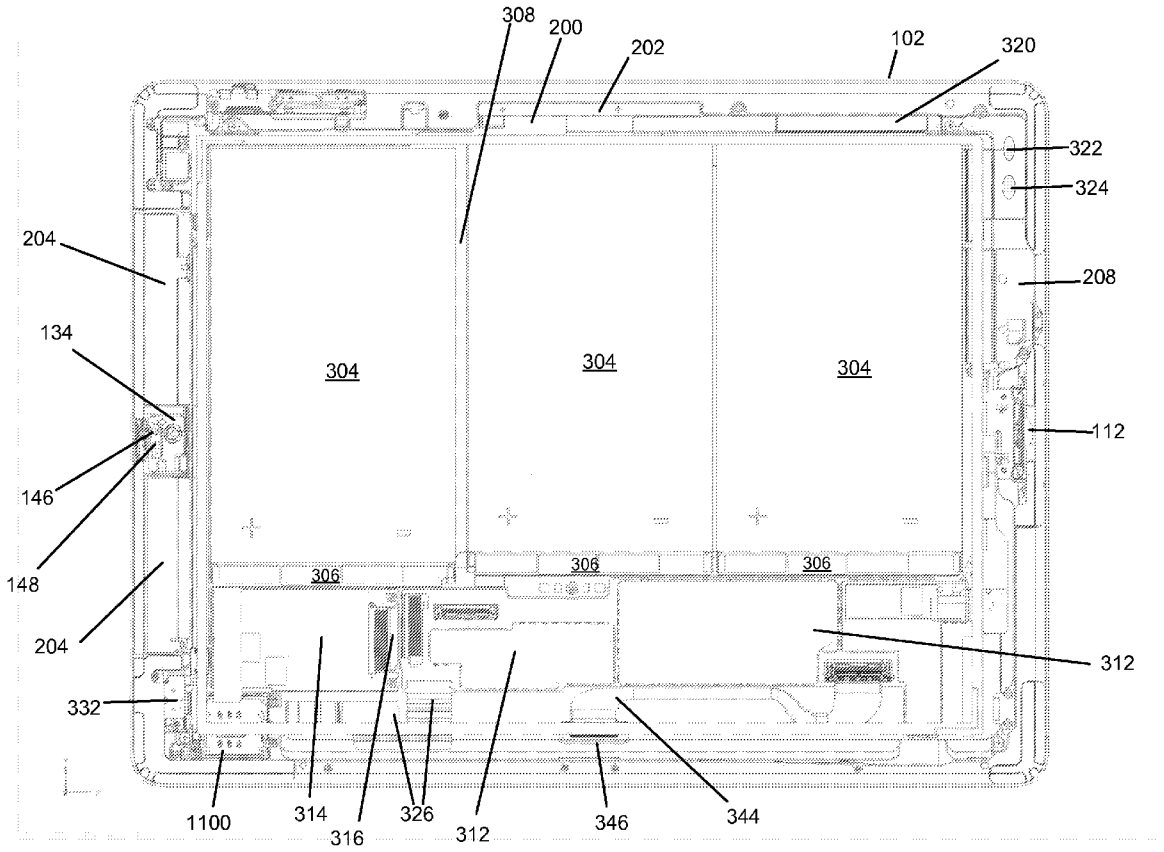

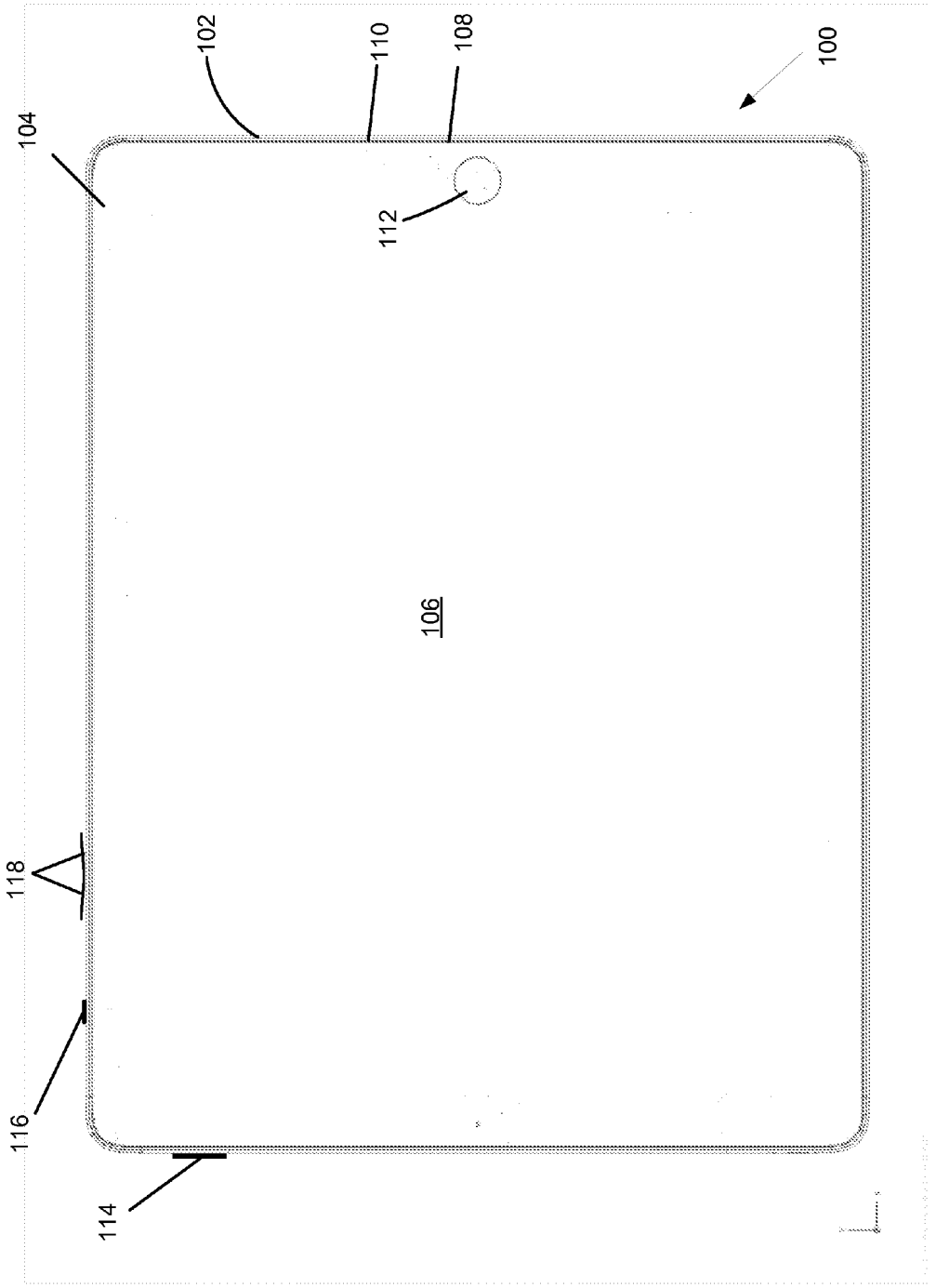

Fig. 1

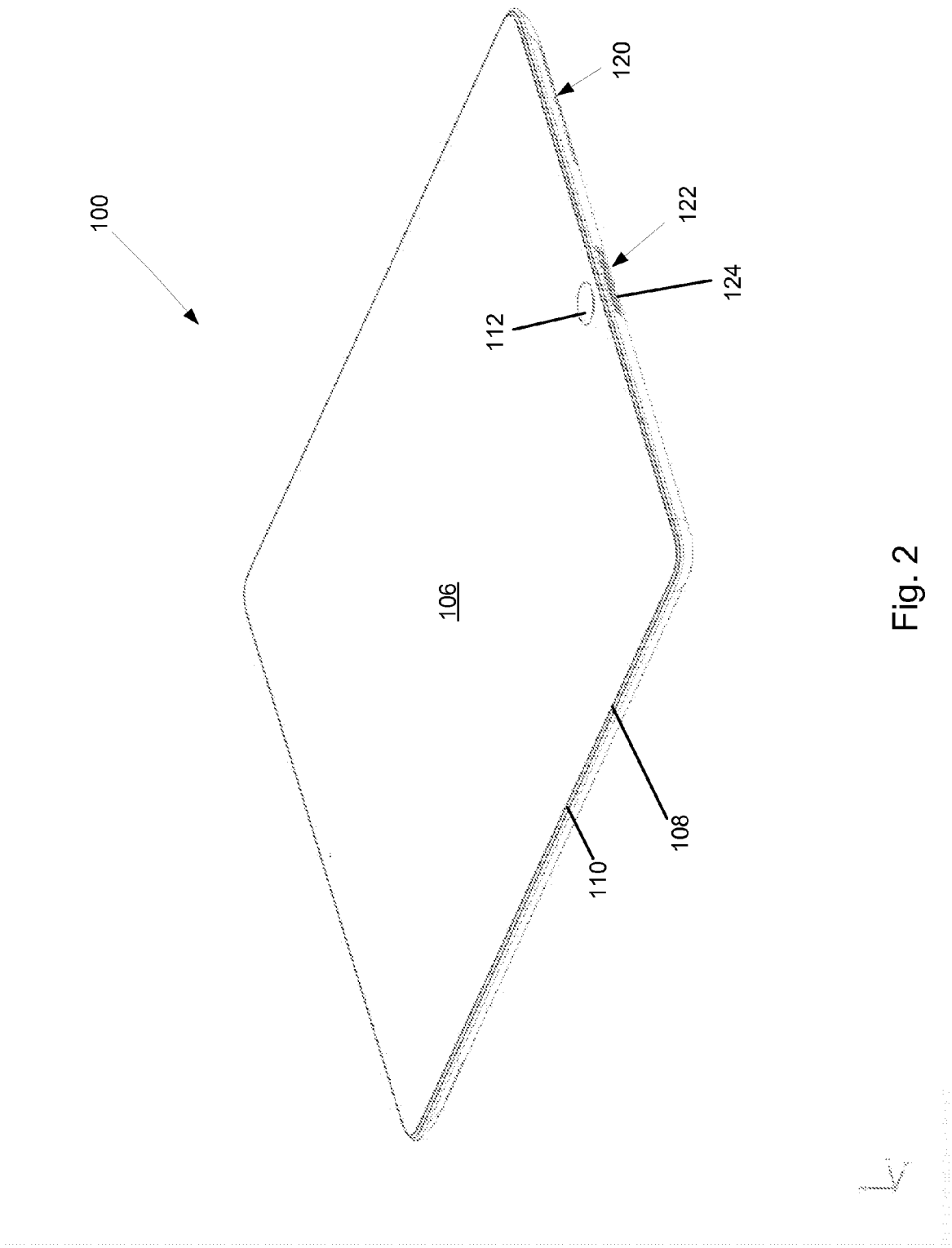

Fig. 2

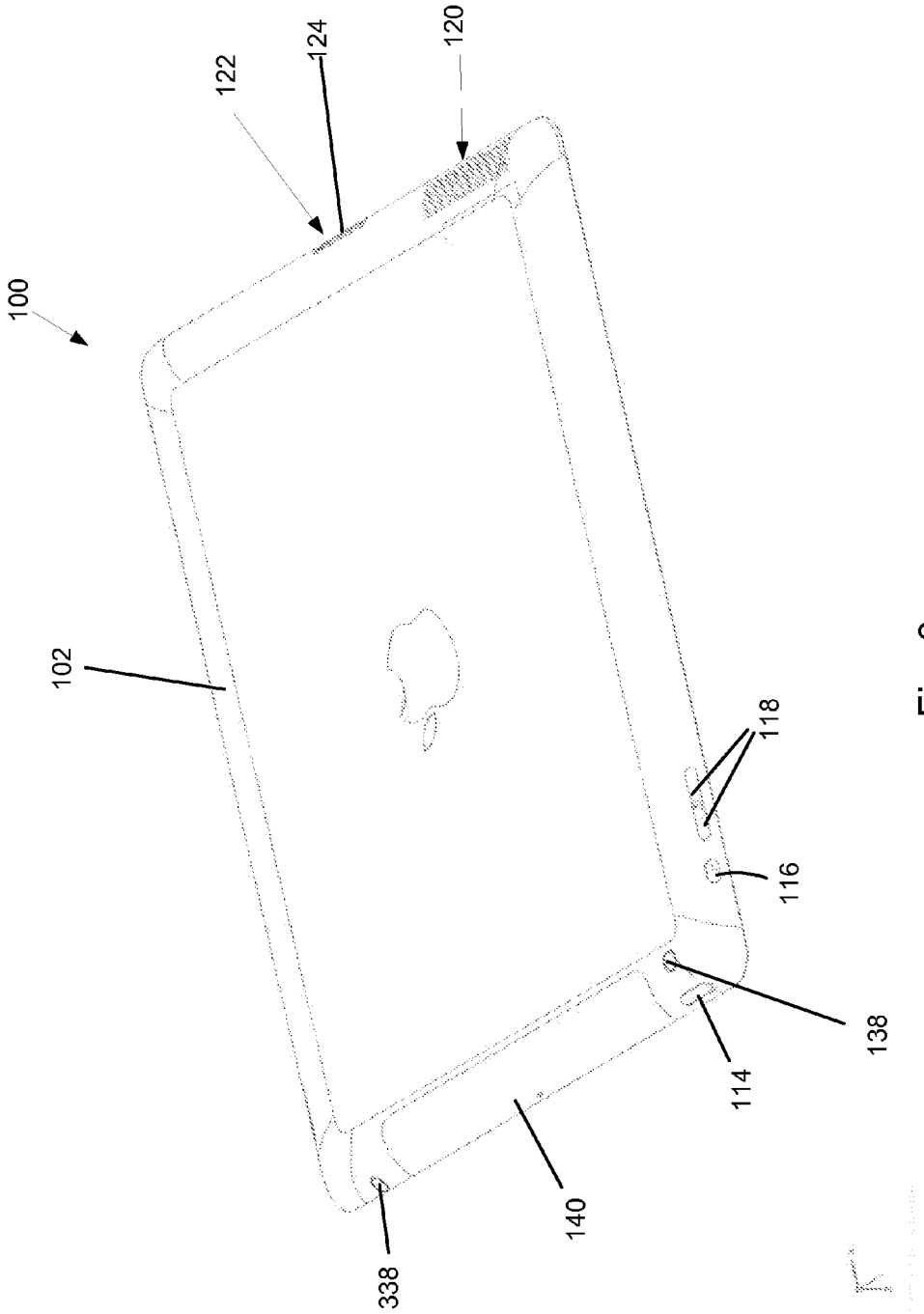

Fig. 3

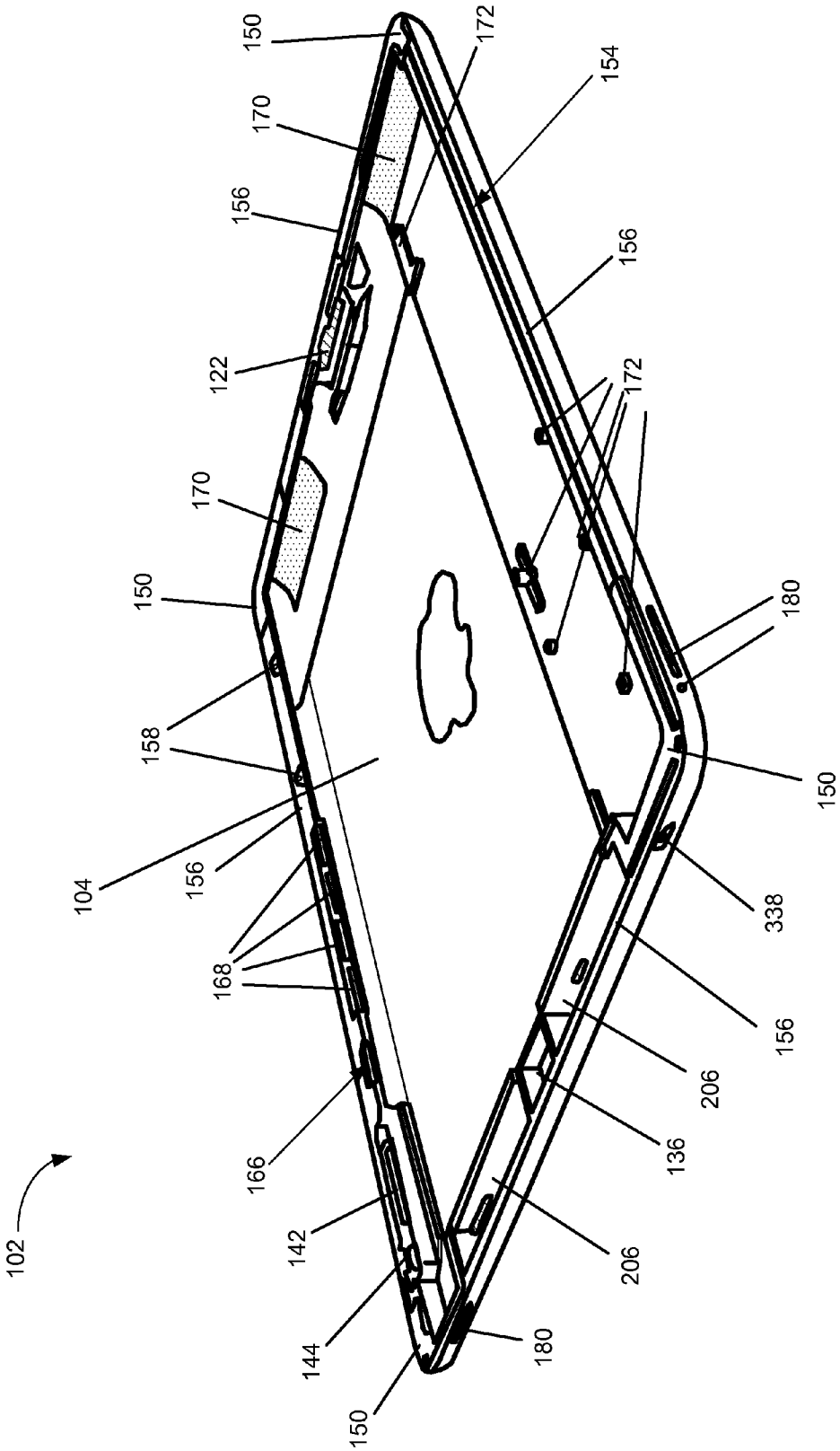
102
150
170
156
122
170
150
158
104
156
168
166
142
144
150
180
206
136
206
156
338
150
180
172
156
154
172

Fig. 4

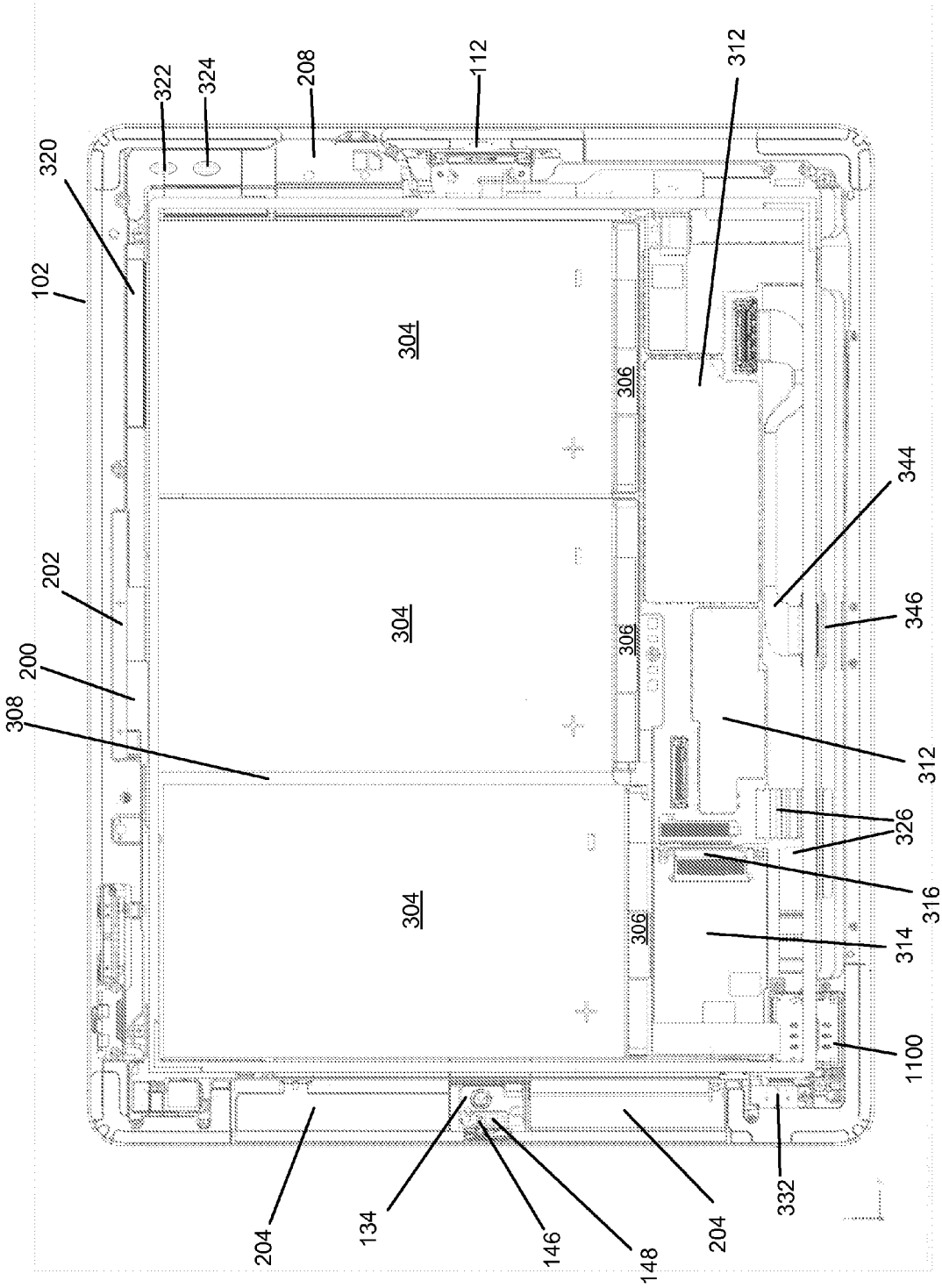
322
324
208
112
312
320
102
304
306
344
202
346
200
308
312
326
316
314
1100
332
204
134
146
148
204

Fig. 5

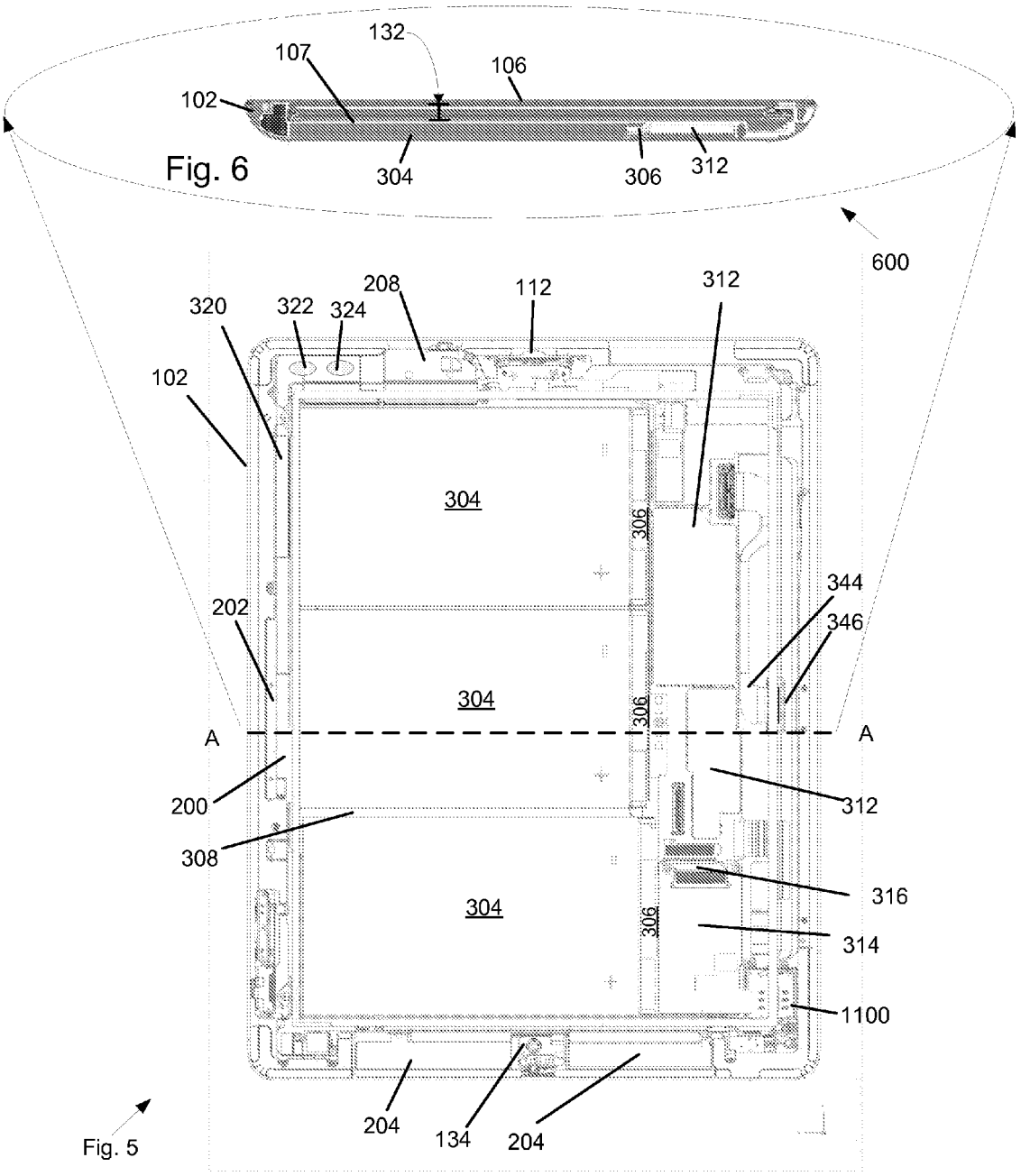
132
107
106
102
304
306
312
600
208
112
312
320
322
324
102
304
306
344
202
346
304
306
A
A
200
312
308
316
304
306
314
1100
204
134
204

Fig. 6

Fig. 5

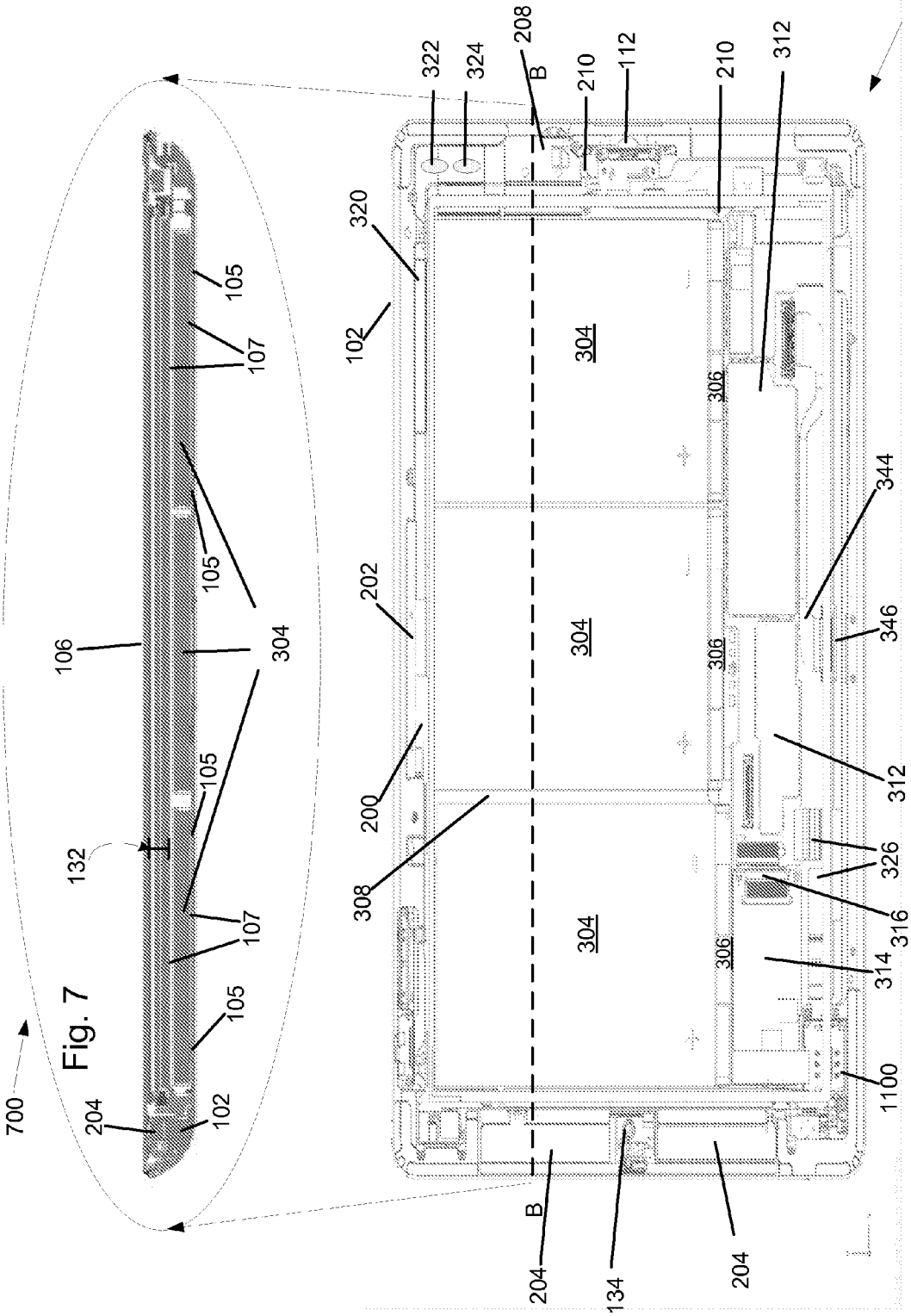
700
204
102
105
107
105
106
304
105
132
107
105
322
324
208
B
210
112
210
312
320
102
304
306
344
202
304
306
346
200
312
308
304
326
316
306
314
1100
B
204
134
204

Fig. 7

Fig. 5

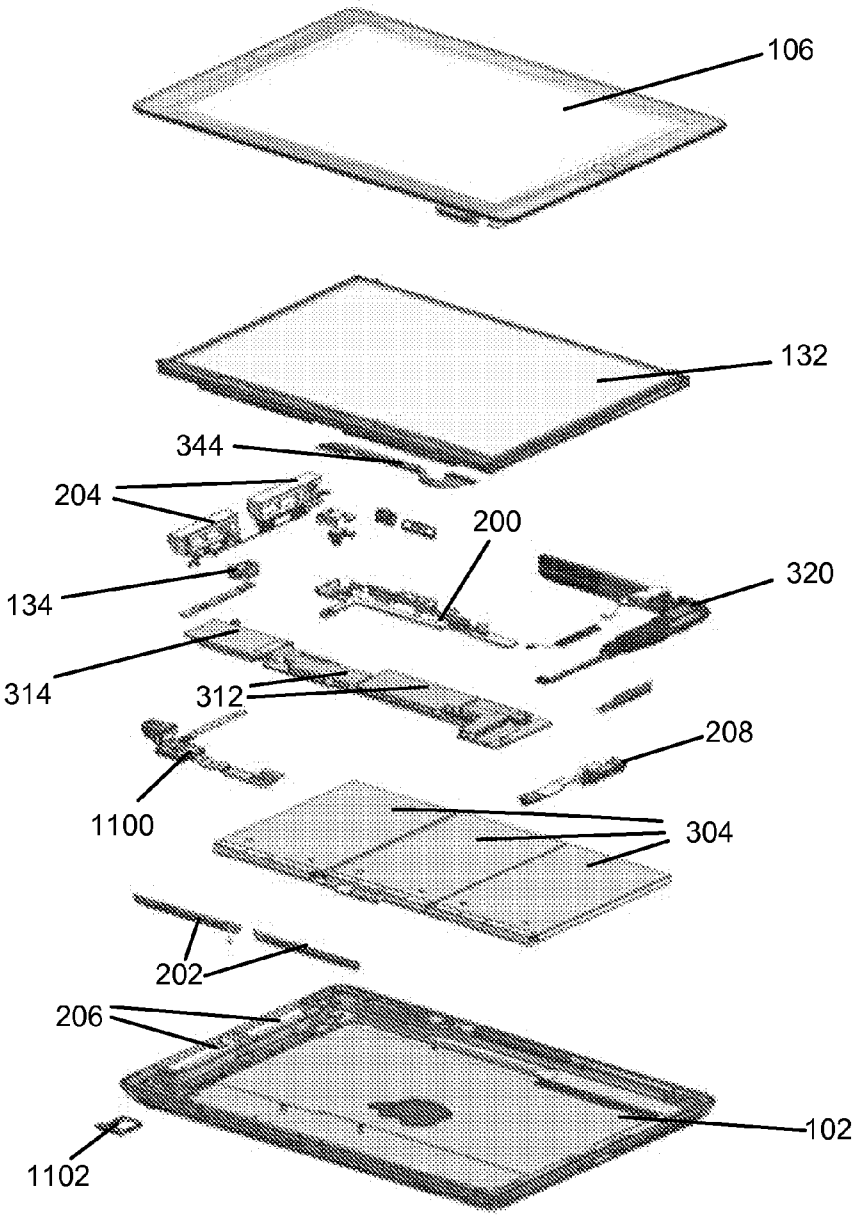
106
132
344
204
200
320
134
314
312
208
1100
304
202
206
102
1102

Fig. 8

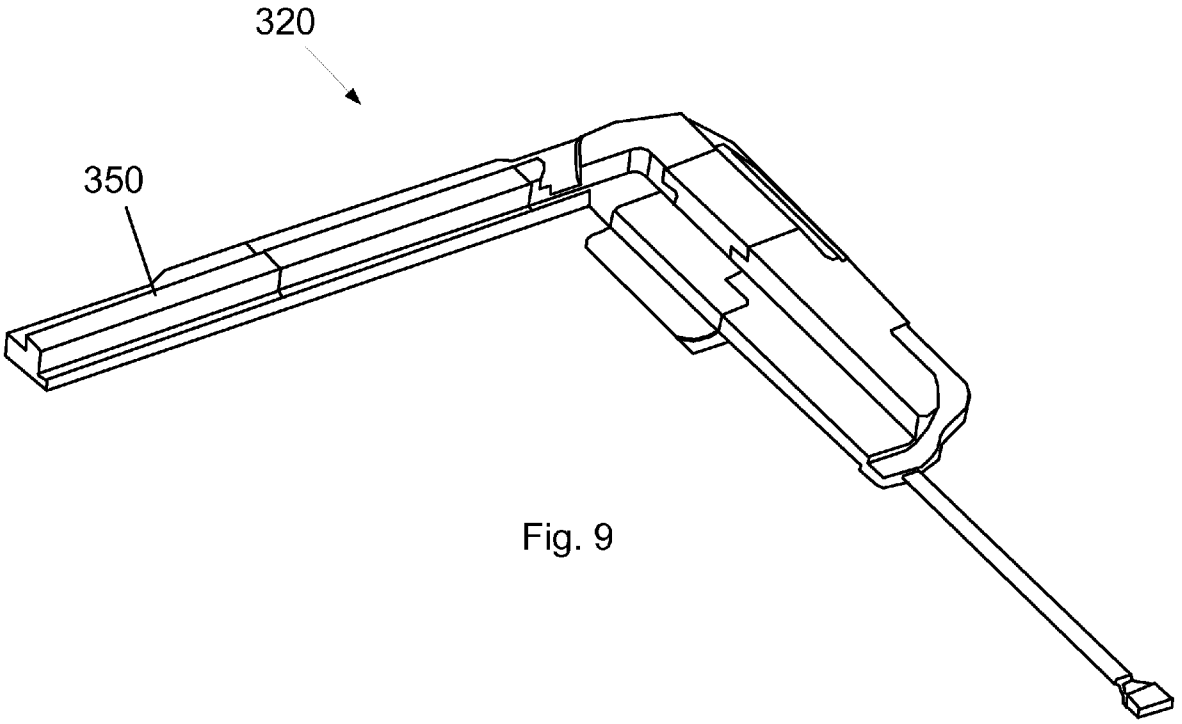

Fig. 9

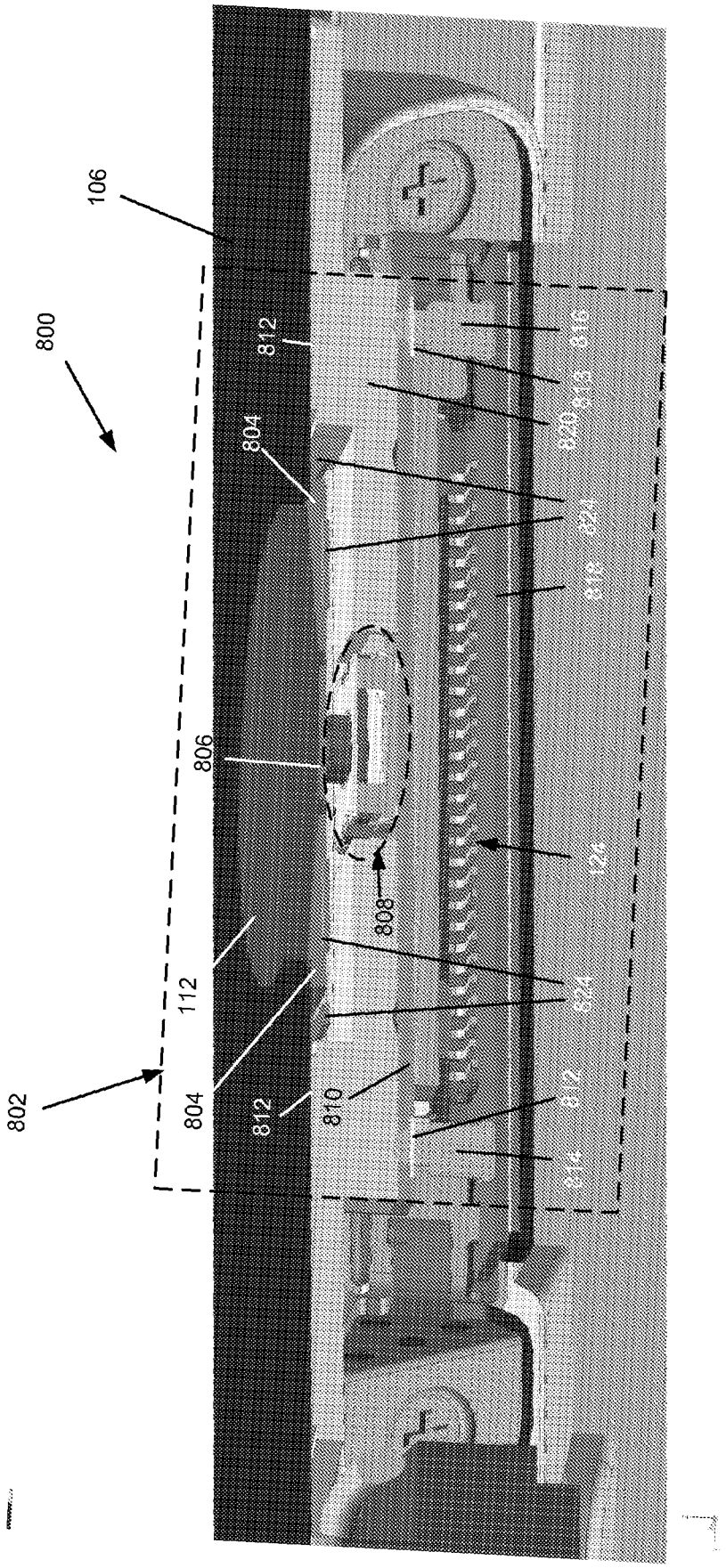
106
800
812
804
816
818
820
824
818
806
124
808
112
824
802
804
812
810
812
814

FIG 10

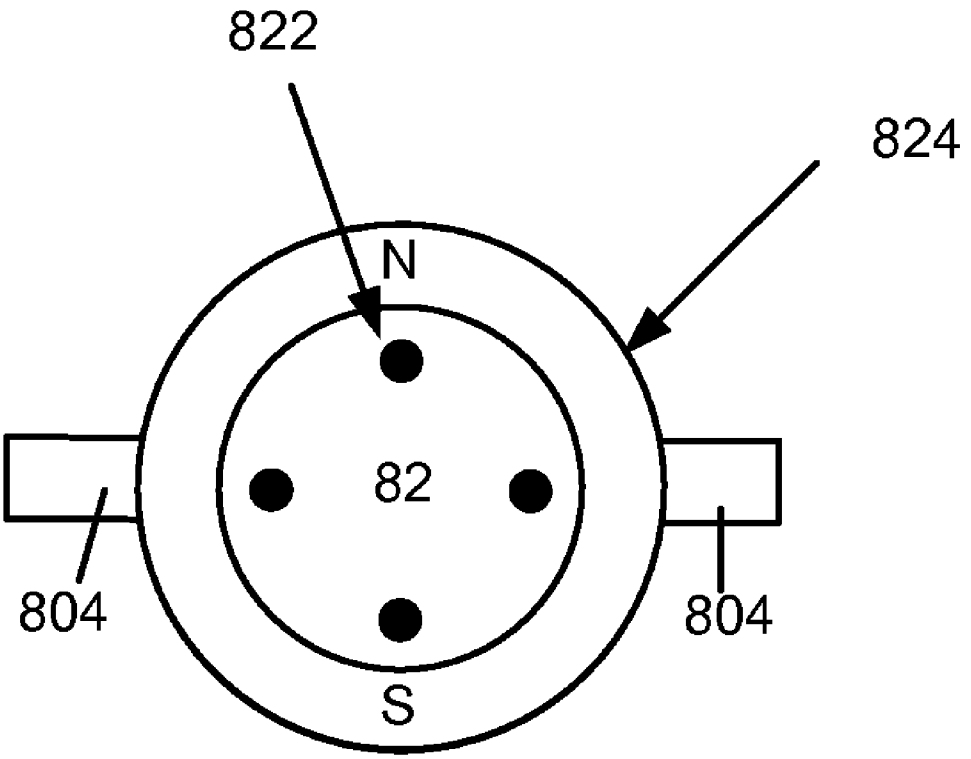

FIG 11

Fig. 12

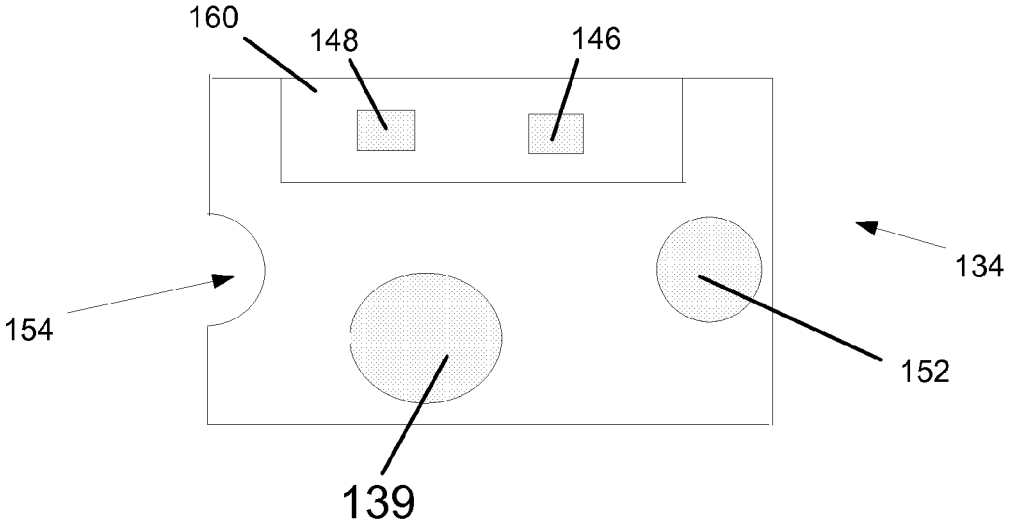

Fig. 13

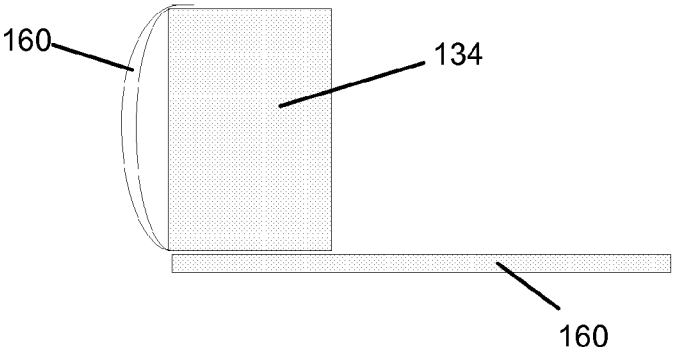

Fig. 14

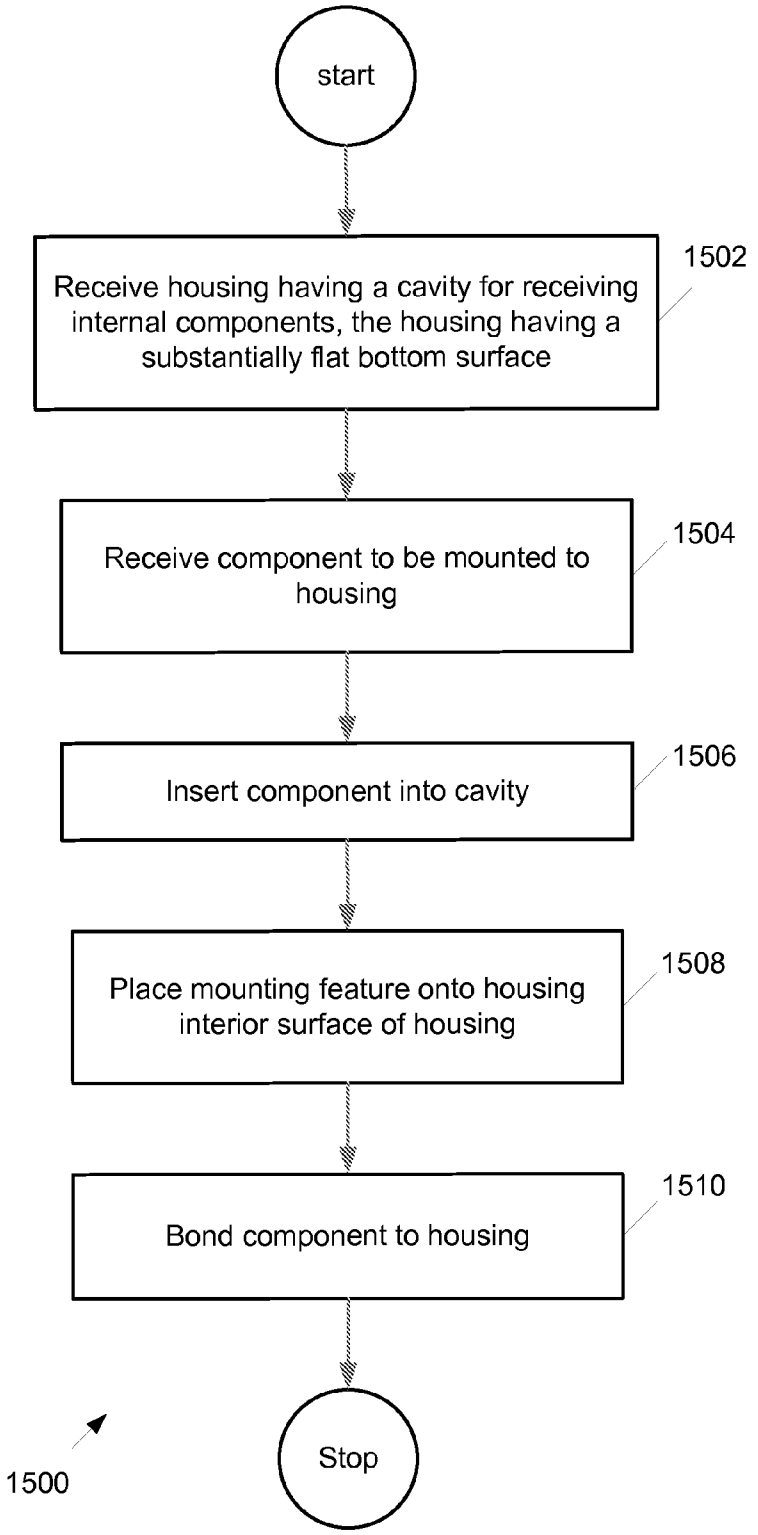
start
Receive housing having a cavity for receiving internal components, the housing having a substantially flat bottom surface
1502
Receive component to be mounted to housing
1504
Insert component into cavity
1506
Place mounting feature onto housing interior surface of housing
1508
Bond component to housing
1510
Stop
1500

Fig. 15

COMPONENT ASSEMBLY

CROSS REFERENCE TO RELATED APPLICATIONS

[0001] This patent application is related to and hereby incorporates by reference herein, in their entireties for all purposes, the following co-pending patent applications filed concurrently herewith:

[0002] (i) U.S. patent application Ser. No. _____ (APL1P799/P10574US1) entitled "FLAT OBJECT EJECTOR ASSEMBLY" by Jules Henry et al.;

[0003] (ii) U.S. patent application Ser. No. _____ (APL1P802/P10574US2) entitled "HANDHELD PORTABLE DEVICE" by Stephen R. McClure et al.;

[0004] (iii) U.S. patent application Ser. No. _____ (APL1P803/P10574US3) entitled "ANTENNA, SHIELDING AND GROUNDING" by Erik A. Uttermann et al.;

[0005] (iv) U.S. patent application Ser. No. _____ (APL1P805/P10574US5) entitled "MACHINING PROCESS AND TOOLS" by Jeremy C. Franklin et al.

BACKGROUND

[0006] 1. Field of the Described Embodiments

[0007] The described embodiments relate generally to portable computing devices such as laptop computers, tablet computers, and the like. More particularly, enclosures of portable computing devices and methods of assembling portable computing devices are described.

[0008] 2. Description of the Related Art

[0009] In recent years, portable computing devices such as laptops, PDAs, media players, cellular phones, etc., have become small, light and powerful. One factor contributing to this reduction in size can be attributed to the manufacturer's ability to fabricate various components of these devices in smaller and smaller sizes while in most cases increasing the power and operating speed of such components. The trend of smaller, lighter and more powerful presents a continuing design challenge in the design of some components of portable computing devices.

[0010] One design challenge associated with the portable computing device is the design of the enclosures used to house the various internal components. This design challenge generally arises from a number conflicting design goals that includes the desirability of making the enclosure lighter and thinner, the desirability of making the enclosure stronger and making the enclosure more aesthetically pleasing. The lighter enclosures, which typically use thinner plastic structures and fewer fasteners, tend to be more flexible and therefore they have a greater propensity to buckle and bow when used while the stronger and more rigid enclosures, which typically use thicker plastic structures and more fasteners, tend to be thicker and carry more weight. Unfortunately, however, the increased weight consistent with the more rugged enclosure can lead to user dissatisfaction whereas bowing of enclosures formed of lightweight material can result in damaging some of the internal components (such as printed circuit boards) of the portable device.

[0011] Furthermore, the enclosures are mechanical assemblies having multiple parts that are screwed, bolted, riveted, or otherwise fastened together at discrete points. These assembly techniques typically complicate the housing design and create aesthetic difficulties because of undesirable cracks, seams, gaps or breaks at the mating surfaces and fasteners located along the surfaces of the housing. For example, a mating line surrounding the entire enclosure is produced when using an upper and lower casing. Moreover, the various components and complicated processes used to manufacture the portable device can make assembly a time consuming and cumbersome process requiring, for example, a highly trained assembly operator working with special tools.

[0012] Another challenge is related to techniques for mounting structures within the portable computing devices. Conventionally, the structures have been laid over one of the casings (upper or lower) and attached to one of the casings with fasteners such as screws, bolts, rivets, etc. That is, the structures are positioned in a sandwich-like manner in layers over the casing and thereafter fastened to the casing. This methodology suffers from the same drawbacks as mentioned above, i.e., assembly is a time consuming and cumbersome process.

[0013] In view of the foregoing, there is a need for improved component density and simpler manufacturing techniques that reduce cost and improve outgoing quality. In addition, there is a need for improvements in the manner in which handheld devices are assembled, such as improvements that enable structures to be quickly and easily installed within the enclosure. It is also desirable to minimize the Z stack height of the assembled components in order to reduce the overall thickness of the portable computing device and thereby improve the overall aesthetic look and feel of the product.

SUMMARY OF THE DESCRIBED EMBODIMENTS

[0014] A portable computing device is disclosed. The portable computing device can take many forms such as a laptop computer, a tablet computer, and so on. In one embodiment, the portable computing device can include a single piece housing having a front opening. In the described embodiment, the single piece housing can, in turn, include an integral bottom and side walls that cooperate to form a cavity in cooperation with the front opening where an interior surface of the bottom wall is substantially flat and the side walls are curved. In addition to the single piece housing, the portable computing device can include components, including at least a battery cell and main logic board, that are mounted directly to a central portion of the bottom wall. Additional components, including sensors, antennae, buttons, switches, and a speaker module, can be arranged around a peripheral edge of the battery cell and main logic board. The portable computing device can also include a display assembly mounted to the housing and a transparent cover disposed within the front opening and attached to the housing. A bottom portion of the single piece housing and the mounted display assembly can form a protective enclosure for the battery cell.

[0015] In another embodiment, a portable computing device is disclosed. The portable computing device can include a single piece housing having a front opening. In the described embodiment, the single piece housing can include an integral bottom and side walls that cooperate to form a cavity in cooperation with the front opening, wherein the bottom wall has an interior surface that is substantially flat. Components, such as battery cells and a main logic board, can be mounted directly to the interior surface of the bottom wall of the housing. The battery cells and a main logic board can be

in substantially the same plane and the battery cells can expand into a space between battery cells during operation. A display assembly can be disposed within the front opening and mounted to the housing such that the housing and the display assembly together form a protective enclosure for the battery cell.

[0016] In another embodiment, a portable computing device is disclosed. The portable computing device can include a single piece housing having a front opening. The single piece housing can include an integral bottom and side walls that cooperate to form a cavity in cooperation with the front opening. The bottom wall of the housing can have an interior surface that is substantially flat surrounded by a plurality of recesses in a peripheral edge portion. A component can be mounted directly to the substantially flat interior surface of the bottom wall and at least another component can be mounted in a recess in the peripheral edge portion. A display system and transparent cover can be disposed within the front opening and attached to the housing.

[0017] In still another embodiment, a method is described. The method can be carried out by receiving a housing having a cavity for receiving internal components, the housing having a cavity with a substantially flat interior bottom surface. Components, including a battery cell and a main logic board, to be mounted to the substantially flat interior bottom surface of the housing is then received. The components are bonded directly to the interior bottom surface of the housing, such that the battery cell and the main logic board are in substantially a same plane.

BRIEF DESCRIPTION OF THE DRAWINGS

[0018] The embodiments will be readily understood by the following detailed description in conjunction with the accompanying drawings, wherein like reference numerals designate like structural elements, and in which:

[0019] FIG. **1** shows a top view of a portable computing device in accordance with the described embodiments.

[0020] FIG. **2** shows a perspective top view of a portable computing device in accordance with the described embodiments.

[0021] FIG. **3** shows a perspective bottom view of a portable computing device in accordance with the described embodiments.

[0022] FIG. **4** is a perspective view of view of the interior of the housing of a portable computing device in accordance with the described embodiments.

[0023] FIG. **5** presents a top level internal view of portable computing device showing a specific arrangement of various internal components in accordance with described embodiments

[0024] FIG. **6** shows a cross-section along line AA of FIG. **5**.

[0025] FIG. **7** shows a cross-section along line BB of FIG. **5**

[0026] FIG. **8** shows an exploded perspective view of major components of a portable computing device in accordance with described embodiments.

[0027] FIG. **9** shows a more detailed view of the speaker module in accordance with described embodiments.

[0028] FIG. **10** illustrates a cross-sectional perspective view of a button assembly mounted through a cover glass of a portable computing device in accordance with the described embodiments.

[0029] FIG. **11** illustrates a top view of a portion of the button assembly of FIG. **10**.

[0030] FIG. **12** is a side view of a portion of the display with alignment pins for the camera module.

[0031] FIG. **13** is a top plan view of the camera module.

[0032] FIG. **14** is a side view of the camera module and a portion of the flex connector coupled to it.

[0033] FIG. **15** shows a flowchart detailing a process in accordance with the described embodiments.

DESCRIBED EMBODIMENTS

[0034] In the following paper, numerous specific details are set forth to provide a thorough understanding of the concepts underlying the described embodiments. It will be apparent, however, to one skilled in the art that the described embodiments may be practiced without some or all of these specific details. In other instances, well known process steps have not been described in detail in order to avoid unnecessarily obscuring the underlying concepts.

[0035] This paper discusses an aesthetically pleasing portable computing device that is easy to carry with one hand and operate with the other. The portable computing device can be formed of a single piece housing and an aesthetically pleasing protective top layer that can be formed of any of a number of durable and strong yet transparent materials, such as highly polished glass or plastic. For the remainder of this discussion, however, the protective top layer can take the form of highly polished cover glass without any loss in generality. Furthermore, the uniformity of the appearance of the portable computing device can be enhanced since (unlike conventional portable computing devices) the cover glass can be mounted to the single piece housing without the use of a bezel. This simplicity of design can accrue many advantages to the portable computing device besides those related to aesthetic look and feel. For example, fewer components and less time and effort can be required for assembly of the portable computing device, and the absence of seams in the single piece housing can provide good protection against environmental contamination of internal components. Moreover, the ability of the portable computing device to successfully withstand applied loads (such as from day to day use) as well as those from less frequent but potentially more damaging events such as being dropped can be substantially improved over conventional portable computing devices.

[0036] In the described embodiments, the single piece housing can be formed from plastic or metal. In the case where the single piece housing is formed of metal, the metal can take the form of a single sheet or block (such as aluminum). The single sheet of metal can be machined or formed into a shape appropriate for housing various internal components as well as providing various openings into which buttons, switches, connectors, displays, and so on can be accommodated. The single piece housing can be machined, forged, molded, or otherwise processed into a desired shape.

[0037] These and other embodiments are discussed below with reference to FIGS. **1-18**. However, those skilled in the art will readily appreciate that the detailed description given herein with respect to these figures is for explanatory purposes only and should not be construed as limiting.

[0038] FIG. **1** illustrates a specific embodiment of portable computing device **100**. More specifically, FIG. **1** shows a full top view of fully assembled portable computing device **100**. Portable computing device **100** can process data and more particularly media data such as audio, video, images, etc. By

way of example, portable computing device **100** can generally correspond to a device that can perform as a music player, game player, video player, personal digital assistant (PDA), tablet computer, camera, and/or the like. With regard to being handheld, portable computing device **100** can be held in one hand by a user while being operated by the user's other hand (i.e., no reference surface such as a desktop is needed). For example, the user can hold portable computing device **100** in one hand and operate portable computing device **100** with the other hand by, for example, operating a volume switch, a hold switch, or by providing inputs to a touch sensitive surface, such as a display or pad.

[0039] Portable computing device **100** can include single piece housing **102** that can be formed of any number of materials, such as plastic or metal, which can be machined, forged, molded, or otherwise processed into a desired shape. In those cases where portable computing device **100** has a metal housing and incorporates RF based functionality, it may be advantageous to provide at least a portion of housing **102** in the form of radio (or RF) transparent materials, such as ceramic or plastic to permit transmission of RF signals therethrough. In any case, housing **102** can be configured to have a cavity for at least partially enclose any suitable number of internal components associated with the portable computing device **100**. For example, housing **102** can enclose and support internally various structural and electrical components (including integrated circuit chips and other circuitry) to provide computing operations for portable computing device **100**. The integrated circuits can take the form of chips, chip sets, or modules, any of which can be surface mounted to a printed circuit board (PCB) or other support structure. For example, a main logic board (MLB) can have integrated circuits mounted thereon that can include at least a microprocessor, semi-conductor (such as FLASH) memory, various support circuits and so on.

[0040] Housing **102** can include opening **104** for placing internal components therein and may be sized to accommodate a display assembly or system suitable for providing a user with at least visual content, such as, for example, via a display. In some embodiments, the display system can include touch sensitive capabilities providing the user with the ability to provide tactile inputs to portable computing device **100** using touch inputs.

[0041] The display system **132** can be formed of a number of layers. A separate transparent protective layer **106** formed of polycarbonate or other appropriate plastic or highly polished glass can be positioned over the display system **132**. Using highly polished glass, protective layer **106** can take the form of cover glass **106** substantially filling opening **104**. Trim bead **108** can be used to form a seal between cover glass **106** and housing **102**. Trim bead **108** can be formed of a rigid plastic material. In this way, trim bead **108** can provide protection to the edge of the cover glass **106**. The trim bead **108** can be injection molded plastic with a very thin cross-section so it can be very difficult to handle, control, and measure. The trim bead **108** can also be very difficult to mold consistently to the same size, as variations in temperature and humidity at the molding site can cause a big percentage increase or decrease in the size of the trim bead **108**. Thus, different bins of housings and trim beads can be sorted and then matched so that the correct housings and trim beads can be matched to minimize the gap between the housing **102** and trim bead **108** to be about **0.05** mm.

[0042] In this embodiment, racetrack **110** can be defined as the uppermost portion of the housing **102** that surrounds cover glass layer **106**. In order to maintain the desired aesthetic look and feel of portable computing device **100**, it is desirable that any offsets between the housing **102** and cover glass **106** be minimized by centering racetrack **110**. A display panel **132** (shown in FIGS. **6** and **7**) underlying cover glass **106** can be used to display images using any suitable display technology, such as LCD, LED, OLED, electronic or e-inks, and so on.

[0043] Portable computing device **100** can include a number of mechanical controls for controlling or otherwise modifying certain functions of portable computing device **100**. For example, power switch **114** can be used to manually power on or power off portable computing device **100**. Slide switch **116** can be used to mute any audio output provided by portable computing device **100** whereas volume switch **118** can be used to increase/decrease volume of the audio output by portable computing device **100**. In the described embodiment, the slide switch **116** can be a sliding switch and the volume switch **118** can be a rocker switch. In other embodiments, slide switch **116** can be provided for other functions. It should be noted that each of the above described input mechanisms are typically disposed through an opening in housing **102** such that they can couple to internal components.

[0044] Portable computing device **100** can include a mechanism for wireless communications, as either a transceiver type device or receiver only, such as a radio. Portable computing device **100** can include an antenna that can be disposed internal to a radio transparent portion of housing **102**. In some embodiments, an antenna can be incorporated into the trim bead **108** or cover glass **106**. In other embodiments, a portion of housing **102** can be replaced with radio transparent material in the form of an antenna window **140** described in more detail below. The radio transparent material can include, for example, plastic, ceramic, and so on. The wireless communications can be based on many different wireless protocols including for example 3G, 2G, Bluetooth, RF, 802.11, FM, AM, and so on. Any number of antennae may be used, which can use a single window or multiple windows depending on the needs of the system. In one embodiment, the system can include at least first and second antenna windows built into the housing.

[0045] FIG. **2** shows a perspective top view of portable computing device **100** in accordance with the described embodiments. As shown in FIG. **2**, portable computing device **100** can include one or more speakers **120** used to output audible sound. Portable computing device **100** can also include one or more connectors for transferring data and/or power to and from portable computing device **100**. For example, portable computing device **100** can include multiple data ports, one for each configuration of portrait mode and landscape mode. However, the currently described embodiment includes a data port **122** that can be formed of connector assembly **124** accommodated within an opening formed along a first side of housing **102**. In this way, portable computing device **100** can use data port **122** to communicate with external devices when portable computing device **100** is mounted in a docking station. It should be noted that in some cases, portable computing device **100** can include an orientation sensor or an accelerometer that can sense the orientation or movement of portable computing device **100**. The sensor can then provide an appropriate signal which will then cause portable computing device **100** to present visual con-

tent in an appropriate orientation. Such sensors can be coupled to a sensor board **200**, which will be described in more detail below.

[0046] Connector assembly **124** can be any size deemed appropriate such as, for example, a **30** pin connector. In some cases, the connector assembly **124** can serve as both a data and power port thus obviating the need for a separate power connector. Connector assembly **124** can be widely varied. In one embodiment, connector assembly **124** can take the form of a peripheral bus connector, such as a USB or FIREWIRE connector. These types of connectors include both power and data functionality, thereby allowing both power delivery and data communications to occur between the portable computing device **100** and the host device when the portable computing device **100** is connected to the host device. In some cases, the host device can provide power to the media portable computing device **100** that can be used to operate the portable computing device **100** and/or charge a battery included therein concurrently with the operating.

[0047] FIG. **3** shows a perspective bottom view of a portable computing device in accordance with the described embodiments. A perspective interior view of a housing **102** suitable for enclosing operational components of the portable computing device **100** can be seen in FIGS. **4** and **8**. As shown in FIG. **4**, the housing **102** is formed with an opening **104** into which the internal components are placed. A cavity in the center of the housing **102** provides space for battery cells **304** and the MLB **312**. Other components are arranged generally in the periphery around the battery cells **304** and the MLB **312**. Some of the components can be positioned in smaller recesses formed in the edge portion or ledge **156** of the housing **102**. For example, an RF antenna **204** is positioned in an RF antenna recess **206** and a camera **134** is positioned in a camera recess **136**. Magnets **202** that cooperate with a cover can be positioned in slots **168** along an edge of the housing **102**. FIG. **4** also shows openings **142**, **144** in the housing **102** to accommodate the slide switch **116** and volume switch **118**.

[0048] A corner bracket **150** can be added to the single piece housing **102** in each corner to strengthen and add stiffness to the housing **102** in those areas. The housing **102** can also be provided with openings or holes **180** for buttons and switches, including a slide switch **116** and volume switch **118**. Speaker holes or a speaker grill **170** can also be formed in the housing **102**. Speaker attachment features **158** can also be provided on the ledge **156** for attaching the speaker module **320**. In the described embodiment, speaker attachment features **158** are provided for attaching a substantially L-shaped speaker module **320**. The housing **102** can also be formed with additional features **172** for attaching or aligning components, such as the MLB **312**.

[0049] The shape of the housing can be asymmetric in that an upper portion of the housing can be formed to have a substantially different shape than that exhibited by a lower portion of the housing. For example, the upper portion of the housing can have surfaces that meet at distinct angles forming well defined boundary whereas the lower portion can be formed to have a substantially flat bottom surface. The transition zone between the upper portion having distinct edges and the lower, substantially flat portion can take the form of an edge having a rounded, spline shape providing both a natural change from the upper portion of the housing (i.e., the area of distinct edges) and the smoother, substantially flat surface presented by the lower portion of the housing. It should also be noted that in addition to providing a more aesthetically pleasing transition, the rounded, spline shape of the edge in the transition zone can provide a more comfortable feel when being held in a user's hand either during use or merely being carried about. One of the advantages to using metal for the housing is ability of metal to provide good electrical grounding for any internal components requiring a good ground plane. For example, performance of a built in RF antenna can be substantially improved when a good ground plane is provided. Moreover, a good ground plane can be used to help mitigate the deleterious effects caused by, for example, of electromagnetic interference (EMI) and/or electrostatic discharge (ESD).

[0050] Housing **102** can include a number of features used to facilitate the installation of internal components used in the assembly of portable computing device **100**, as shown in FIG. **4**. These features are integral with the single body construction of the housing **102**, and do not need to be individually mounted to the housing **102**. Assembly of the portable computing device **100** is therefore simplified. In the described embodiment, single piece housing **102** can be formed from a single sheet or block of metal (such as aluminum) and formed into an appropriate shape using, for example, core metal forming techniques well known to those skilled in the art.

[0051] For example, recess **206** can be formed in housing **102** suitably sized and located for an RF antenna. In the case where recess **206** is used for placing an RF antenna, recess **206** can support an RF antenna support assembly formed of at least some radio transparent material. For example, the RF antenna support assembly may be foam that is pre-loaded into the recess **206** before the RF antenna **204** is placed in the recess **206**. The foam RF support assembly can bias the RF antenna **204** against the display assembly **132** so that there is a consistent distance between the RF antenna **204** and the display **132** to improve performance of the RF antenna **204**. The RF antenna **204** can be adhered to the display assembly **132** using, for example, PSA. By providing an RF antenna support assembly and an RF antenna window **140** formed of at least some radio transparent material, the RF antenna support assembly and RF antenna window **140** can facilitate unimpeded transmission and reception of RF energy in support of any number of wireless protocols such as WiFi, Blue Tooth, and so on. It should be noted the ability to provide unfettered RF functionality is especially important when housing **102** is formed of radio opaque materials such as most metals.

[0052] The following discussion describes specific approaches to both minimizing the Z height of the assembled components and maximizing component density within housing **102**. In other words, the Z stack associated with installed internal components is such that the components can be easily accommodated by the cavity in the housing **102** without the need to resort to lengthy and time consuming assembly procedures. The reduced Z stack and improved component density can be accomplished in many ways, such as configuring the structure of an internal component to perform multiple functions.

[0053] For example, portable computing device **100** can include a battery assembly. The battery assembly can, in turn, include battery cells **304** that can be directly attached to the interior of the bottom wall of the housing **102**. In an embodiment, strips of pressure sensitive adhesive (PSA) **105**, as shown in FIG. **6**, can be used to adhere a battery cell **304** directly to the housing **102** without a conventional battery pack or frame. In the described embodiment, two strips of

PSA **105** are used to adhere each battery cell **304**. The direct attachment of each battery cell **304** to housing **102** obviates the need for a separate battery support/protection structure, such as a battery case that is typically used in a conventional battery pack. Such battery cases are typically plastic enclosures around the battery cells. The plastic enclosures are separate from the computer or device housing. In the described embodiment, a protective enclosure for the battery cells **304** can be provided by the housing **102** and the display **132** that is directly mounted to the housing **102**. By eliminating a separate battery case, the overall weight and z stack height of the power supply assembly can be reduced over that required for a conventional battery pack.

[0054] In the described embodiment, all of the battery cells **304** are directly soldered to the same battery management unit (BMU) **306**. In other embodiments, the individual battery cells **304** can be electrically connected to each other by way of a flexible connector, or flex. The flexible connector can, in turn, be soldered to the BMU **306**. The BMU **306** can be used for some or all of the battery cells in the device.

[0055] A gap (referred to as a swell gap) **107** can be provided to accommodate swelling anticipated to occur during normal operation of the battery cells **304**. A swell gap **107** can be provided between a bottom wall of housing **102** and a lower surface of the battery cell **304** in the space between the strips of PSA. A swell gap **107** can also be provided in the space above the battery cells **304** between the top surfaces of the battery cells **304** and the bottom surface of the display assembly **132**. By providing a swell gap **107** below the battery cells **304**, space between the battery cells **304** and the housing **102** that would otherwise be wasted can be used in a productive manner. According to an embodiment, all of the battery cells **304** can be soldered onto the same BMU **306**.

[0056] As shown in FIG. **5**, there are generally no structures between the battery cells **304**, which are held in their desired positions on the housing **102** by adhesive. To utilize the space between the battery cells **304**, a connector cable **308** may be positioned between two cells, as shown in FIG. **5**. In the illustrated embodiment, this particular connector cable **308** connects the MLB **312** and the sensor board **200**, which can be coupled to sensors. The sensors can be designed to sense things that lead to intelligent decisions by the portable computing device **100**. In essence, the sensors can provide information or cues that help predict the portable computing device's future use or user's needs so that the device **100** can be configured accordingly. In most cases, the sensors are configured to sense one or more environmental attributes surrounding the portable computing device **100**. Such environmental attributes may, for example, include temperature, ambient light, motion, vibration, pressure, touch, pressure, noise, orientation, time, force, and/or the like.

[0057] Thus, the sensors can include antenna proximity sensors, a compass, an accelerometer, a gyroscope, and a Hall Effect sensor mounted on the sensor board **200**. The sensor board **200** can extend from the area of the magnets **202** all the way along the peripheral edge of the battery cells **304** to the corner of the device **100** near one of the RF antennae **204**, as shown in FIG. **5**. It should be noted that the compass should be positioned on the sensor board **200** as far away from the magnets **202** as possible to prevent interference. The sensor board **200** can also be connected to the camera **134**, the ambient light sensor (ALS) **146** and the thermal sensor **148** as well as the slide switch **116** and volume switch **118**. The connector cable **308** provides a way to connect all of the components coupled with the sensor board **200** with the MLB **312**. By positioning the cable connector **308** in the space between two battery cells **304**, which would have been otherwise unused, minimizes the overall footprint of the components in the cavity and at the same time keeps the Z stack height minimized by using space in a more efficient manner. Furthermore, it is important for the accelerometer and gyroscope to be as far away from the MLB **312** and its power traces as possible to minimize cross talk, so the connector cable **308** positioned between battery cells **304** is an efficient and clean way to connect the accelerometer and gyroscope to the MLB **312** while keeping them as far away as possible. The sensor board **200** can be rigidly bonded to the housing **102** using PSA with a foam layer on its top surface to bias the sensor board **200** down to the housing **102**.

[0058] Component density can also be increased. For example, circuits that would otherwise be considered separate can be combined to share a single connector. For example, as discussed above, all of the components coupled to the sensor board **200** can be coupled to the MLB **312** by a single connect, which, in this case, is connector cable **312**. Furthermore, an audio module can include both a microphone and associated circuitry that can share a flex connector with an audio circuit used to produce audio output. In this way, both the number and overall footprint of the internal components can be substantially reduced without adversely affecting overall functionality. In this way, the overall component density can be enhanced while at the same time reducing the number of interconnects used.

[0059] FIGS. **5-24** illustrate the operational components of portable computing device **100**. The operational components are organized substantially in a single layer to minimize the Z stack height of the portable computing device **100**. Thus, most of the internal components of the portable computing device **100** are substantially in a single plane. As described in more detail below, most of the components can be mounted directly to the housing **102**. In this way, minimizing the Z stack height, portable computing device **100** can have a thin profile and be extremely compact, sturdy, aesthetically pleasing and ergonomic at relatively low cost.

[0060] FIG. **5** presents a top internal view of portable computing device **100** showing a specific arrangement of various internal components. In the illustrated embodiment, the internal components can include at least a battery assembly that can include three individual battery cells **304**. Individual battery cells **304** can be attached directly to the housing **102** using adhesive, such as PSA strips. Other types of adhesives or mounting methods may also be used to attach the battery cells **304** to the housing **102**.

[0061] The internal components can also include main logic board (MLB) **312** that can include a number of operational circuits, such as a processor, graphics circuits, (optional) RF circuitry, semiconductor memory, such as FLASH, and so on. MLB **312** can receive power from the battery cells **304** by way of electrical connectors. As shown in FIG. **4**, the battery cells **304** and the MLB **312** are positioned in the center of the cavity in the housing **102** with most of the other internal components positioned in substantially the same plane around the periphery of the cavity. As described in more detail below, space is conserved by using thin connectors, such as flex connectors, and by fitting connectors in spaces that would be otherwise unused. In this way, the overall footprint of the internal components as well as the Z stack height can be minimized. Arranging some components in the periphery

also serves to isolate certain components from others to improve performance of those components by preventing, for example, cross-talk.

[0062] The internal components can also include speaker module **320** that can include audio circuits arranged to provide an audio signal to audio drivers **322** and **324**, which can be positioned under the speaker grill **120**. Audio drivers **322** and **324**, in turn, can provide audible output to speaker **120**. FIG. **9** shows a more detailed view of the speaker module **320** of the illustrated embodiment. It will be understood that the audio drivers **322** and **324** are not visible in the view shown in FIG. **9**. Shock absorbing foam **350** can be placed on the top and bottom of the speaker module **320** on the end positioned closest to the sensors on the sensor board **200** to protect the sensors, especially the gyroscope, by dampening the vibrations from the speaker module **320**. The foam **350** on the bottom of the speaker module **320** can also be used to create the acoustic seal to the housing **102** so all the sound from the speaker module **320** is directed out of the portable computing device **100** and not into it.

[0063] Portable computing device **100** can also include a number of antennae used for both transmission and reception of RF energy. For example, at least one RF antenna **204** can be incorporated into recess **206** in the housing **102**. In the illustrated embodiment, there are two RF antennae **204**, one positioned in each recess **206**. A radio-transparent window **140** may be provided in the housing **102** in the area of the RF antennae **204** for better overall reception/transmission. Another antenna **208** for supporting the wireless WiFi protocol can be provided near the peripheral edge of the housing for better antenna performance. A connector cable **210** can couple the WiFi antenna **208** to the MLB **312**.

[0064] In some embodiments, portable computing device **100** can support a number of different wireless standards. For example, in those cases where portable computing device **100** supports a particular wireless standard (such as the **3**G standard), portable computing device **100** can include wireless circuitry appropriate for the particular wireless standard. For example, if portable computing device **100** is **3**G compliant, the MLB **312** can include **3**G wireless circuitry coupled to an appropriately placed and sized RF antenna **204**. Alternatively, in the illustrated embodiment, the RF antennae can be coupled to a radio board **314**. In the illustrated embodiment, the radio board **314** is coupled to the MLB **312** via a flex connector **316**, as shown in FIG. **5**. It should be noted, as discussed above, that a portion of housing **102** is typically replaced with a radio transparent window **140** in cooperation with the RF antenna **204**.

[0065] In the illustrated embodiment, display bus **344** can connect display driver circuitry to MLB **312** by way of display connector **346**, as shown in FIG. **5**. In the described embodiment, display bus **344** can take the form of a low voltage differential signaling (LVDS) bus. In the illustrated embodiment, display bus **344** can be figured to connect the display driver circuitry with the MLB **312** while maintaining a thin-profile because the display bus **344** is configured to be flat despite the number of wires required in such a LVDS bus. In an embodiment, the display bus **344** contains **30** wires that can be bundled in certain portions and then fanned out to a single layer or two layers in other portions.

[0066] FIG. **6** shows cross-section **600** along line AA of FIG. **5** bisecting battery cells **304** and MLB **312**. FIG. **7** shows cross-section **700** along line BB of FIG. **5** bisecting battery cells **304**. In particular, cross-sections **600** and **700** illustrate the compact nature and reduced z stack height of the assembled internal components. As shown in FIGS. **6** and **7**, the components, including the battery cells **304** and the MLB **312**, under the display **132** are substantially in the same plane. As illustrated, these components are mounted to the substantially flat bottom surface of the housing **102**. In order to avoid unnecessary interference with RF transmissions from the RF antenna **204**, the antenna window **140** can be formed of radio transparent material, such as plastic, glass, ceramic and so on. Display module circuit **506** can be connected to LVDS bus **344** by way of connector **346** and be used to drive display panel **132**. FIG. **8** shows an exploded perspective view of major internal components of portable computing device **100**. FIG. **8** also shows a perspective interior view of a housing **102** suitable for enclosing operational components of the portable computing device **100** described herein.

[0067] Display assembly **132** may be placed and secured within the cavity using a variety of mechanisms. In one embodiment, the display system **132** can have alignment holes that can be lined up with alignment holes on the housing **102** to accurately align the display **132**. A temporary fixture can used to align the alignment holes in the display **132** with the alignment holes in the ledge **156** of the housing **102** so that the display is well-centered. While the temporary fixture is in place, an operator is able to screw the display **132** to the housing **102**. The display may be placed flush with the adjacent portion of the housing **102**. In this way, the display can present visual content that can include video, still images, as well as icons such as graphical user interface (GUI) that can provide information the user (e.g., text, objects, graphics) as well as receive user provided inputs. In some cases, displayed icons can be moved by a user to a more convenient location on the display. For example, GUI can be moved by the user manually dragging GUI from one location to a more convenient location. The display can also provide a user with tactile feedback provided by a number of haptic actuators usually, but not always, arranged in an array of haptic actuators incorporated into the display. In this way, the haptic actuators can provide the user with tactile feedback.

[0068] In some embodiments, a display mask (not shown) can be applied to, or incorporated within or under cover glass **106**. The display mask can be used to accent an unmasked portion of the display used to present visual content. The display mask can be used to make less obvious home button **112** used to provide a specific input such as change display mode, for example to portable computing device **100**. The display mask can render home button **112** less obvious by, for example, being closer in tone or color to home button **112**. For example, if home button **112** is formed of a material that is somewhat darker (such as gray or black) than cover glass **106**, then using a similarly colored display mask can reduce the visual impact of home button **112** when compared with the unmasked portion of cover glass **106**. In this way, the visual impact of home button **112** can be reduced by being integrated into the overall look of the display mask. Furthermore, the display mask can provide a natural mechanism for directing the attention of a viewer to the unmasked area of the display used to present visual content. PSA can also be applied to the backside of cover glass **106** in the area of the display mask to provide support and also act as safety glass in the event the cover glass **106** is broken.

[0069] FIG. **5** also shows an embodiment of SIM card release mechanism **1100** in accordance with the described embodiments. SIM card release mechanism **1100** can include

tray **1102** (FIG. **8**) suitable for securing a SIM card when placed thereon. Embedded magnets **202** may also be provided in the housing **102** at magnet slots **168** at an edge of the housing **102**. The magnets **202** can be used in conjunction with a segmented cover assembly that can be used for what is referred to as a peek mode of operation of portable computing device **100**. When a segment of the cover assembly is lifted from glass cover **106**, sensors in portable computing device **100** can detect that the segment of the cover assembly and only that segment has been lifted from glass cover **106**. Once detected, portable computing device **100** can activate only the exposed portion of the display **132**. For example, portable computing device **100** can utilize a Hall Effect sensor to detect that the segment has been lifted from glass cover **106**. In the illustrated embodiment, the Hall Effect sensor can be mounted on the sensor board **200**. FIG. **4** shows an attachment point **166** for the Hall Effect sensor. Additional sensors, such as optical sensors, can then detect if only the segment has been lifted or if additional segments have been lifted. Such sensors are located near and coupled to the sensor board **200**, which is adjacent the magnets **202**.

[0070] The portable computing device **100** can include one or more button assemblies by which the user of the portable computing device **100** can activate various functions. Button assemblies can be mounted through the surface of the cover glass **106** in the portable computing device **100** or through a front, side or back portion of the single piece housing **102** of the portable computing device **100**. The button assemblies can be designed to provide a desired tactile feedback to the user when activating the button assembly's function. In addition, the button assemblies can be designed, in conjunction with designs of both outer surfaces of and inner connection points within the portable computing device **100**, to be positioned approximately flush with the outer surfaces in neutral, "non-depressed" state, even with internal circuit boards located at a distance from a top portion of the button assembly.

[0071] FIG. **10** illustrates a first cross-sectional perspective view **800** of a home button assembly **802** mounted through cover glass **106** of a portable computing device **100** in accordance with the described embodiments. The home button assembly **802** can include an external flat or curved button body **112** that rests approximately flush with an exterior surface of cover glass **106**. Flanges **804** can be mounted on the underside of (or integrally formed with) the external button **112** and extend beneath the underside of cover glass **106**. A central post **806** can be mounted to the underside of (or be integrally formed with) the external button body **112** positioned above a tactile switch unit **808**, which can be mounted to a bracket **820**. The bracket **820** can be formed of a metal, such as stainless steel, and can be adhered to the cover glass **106** using an adhesive **826**, such as, for example, PSA. In a neutral, "non-depressed" state, the central post **806** can be at a distance from the tactile switch unit **808**. Upon depressing the external button body **112**, the central post **806** can contact the tactile switch unit **808** in a manner that results in closing a contact circuit within the tactile switch unit **808**. The use of the tactile switch unit **808** can allow a user of the portable computing device **100** to experience a different "feel" when pressing at different locations on the surface of the external button body **112**, as the external button body **112** can pivot about the top of the tactile switch unit **808**.

[0072] The internal components of the portable computing device **100** can include a flexible circuit or flex **818** through which signals can be conducted as a result of depressing the external button **802**. The flex **818** can be located at a distance from contact points of the tactile switch unit **808**. The distance can be such that the tactile switch unit **808** cannot be mounted directly on the flex **818**, as the travel distance of the center post **806** of the external button body **112** can be too short to reach the tactile switch unit **808** when depressed to activate a function. The flex **818** can also include components in a region directly beneath the external button body **112** that preclude mounting the tactile switch unit **808** directly to the flex **818**. Instead, a connection can be made between the flex **818** and the tactile switch unit **808**.

[0073] As shown in FIG. **10**, the tactile switch unit **808** can be mounted to an intermediate printed circuit board **810**. In some implementations, the intermediate printed circuit board **810** can be connected to the flexible circuit or flex **818** through a flexible cable; however, such a connection can complicate the assembly process. In some embodiments, the flexible cable connection can preclude a simple machine automated assembly and require manual assembly by a technician. The representative embodiment shown in FIG. **10** avoids manual assembly by enabling a connection from the intermediate printed circuit board **810** to the flex **818** through a pair of conductive posts **814**/**816** and a pair of conductive pads **812**/**813**. A first conductive post **814**, for example, can be connected to a DC power level supplied through the flex **818**, while the second conductive post **816** can be connected to a GND level in the flex **818**. Conductive posts **814** and **816** can be connected to separate conductive pads **812** and **813** respectively mounted on the underside of the intermediate printed circuit board **810**. A stiffener can be positioned underneath the conductive posts **814** and **816** to improve rigidity.

[0074] Depressing the external button body **112** can close a circuit within the tactile switch unit **808** connecting the first conductive post **814** to the second conductive post **816** and thereby permitting current to flow, which can activate directly or indirectly a function of the portable computing device **100**. In addition to providing a conductive path, the conductive posts **814** and **816** can be sized and positioned between the intermediate printed circuit board **810** and the flex **818** to "tune" the tactile feel of the button assembly **802** for the user of the portable computing device **100**. For example, the conductive posts **814** and **816** can be positioned closer together or further apart, and the thickness of the intermediate printed circuit board **810** can be varied to increase or decrease flexing that can occur when depressing the external button **802** to contact the tactile switch unit **808**.

[0075] As shown in FIG. **10**, the intermediate circuit board **810** can be mounted to the tactile switch unit **808**. FIG. **11** illustrates a simplified top view of the home button assembly with the flanges **804** extending a bit from underneath the external button body **112**. The top of the external button body **112** can include directional markers **822** that can assist a user in locating the external button body **112** as well as guide the user into applying pressure at appropriate locations on the external button body. The directional markers **822** can take different forms including tactile raised dots and compass point (for example north (N) and south (S)) markers. During operation of the portable computing device **100**, the user can apply pressure off center on the surface of the home button body **112**. A flexure or anti-rotation ring **824** can be provided around the directional markers **822**.

[0076] Button assemblies can also be mounted through a portion of the single piece housing **102** that encloses the

portable computing device **100**. As the single piece housing **102** can be relatively thin to reduce weight of the portable computing device **100**, openings in the housing **102** can impact the structural integrity of portions of the housing **102** near the opening. For relatively large openings, a structural support section can be included inside the housing **102** to improve rigidity; however, a button assembly can still require access through the structural support section. It can be desirable to minimize the size of openings through the structural support section, thereby retaining a desired strength of structural support, when using a relatively larger exterior button that can use a relatively larger opening in the housing **102**.

[0077] In some embodiments, portable computing device **100** can include a camera module **134** configured to provide still and video images. The placement may be widely varied and may include one or more locations, including for example front and back of the device, i.e., one through the back housing, the other through the display window. As shown in FIG. **3**, there can be a rear camera window **138** through the housing **102**. A front camera window **139** (FIG. **13**) can also be provided for a front-facing camera through the display window. FIG. **5** shows a camera window through the display window in the front of the device **100** at the camera module **134**.

[0078] The camera module **134** can be aligned with the display **132** by using alignment pins **130** provided on the bottom surface of the display **132**, as shown in FIG. **12**. These alignment pins **130** line up with a hole **152** and a slot **154** in the top surface of the camera module **134** shown in FIG. **13**. The alignment pins **130** and corresponding hole **152** and slot **154** in the camera module help to align the camera **134** to the display **132** in the x and y directions. As shown in FIG. **14**, a flex connector **160**, which extends under the camera module **134** and wraps around the side to the top of the camera module **134**, can couple the camera module **134**, ALS **146**, and thermal sensor **148** all to the sensor board **200**, which in turn is connected to the MLB.

[0079] An ambient light sensor (ALS) **146** and a thermal sensor **148** can also be provided on the area of the camera module **134**. The ALS **146** can sense when the device **100** is in a dark environment or when the device **100** is in a light environment. Ambient light can include the light surrounding the portable computing device **100** that is produced by sunlight, incandescent light, fluorescent light and the like. If the portable computing device **100** is in a dark environment, the display **132** of the portable computing device **100** can be powered down to be dimmer and to save battery power. Conversely, if the portable computing device **100** is in a light environment, the display **132** can be powered up to be brighter. For example, the display **132** can be dimmed when the ALS **146** senses that the ambient light level decreases a certain amount or reaches a predetermined or specified darkness level, and the display **132** can be brightened when the ALS **146** senses that the ambient light level increases a certain amount or reaches a predetermined or specified lightness level.

[0080] In some cases, multiple ambient light sensors may be used. This may help produce a more accurate reading of ambient light as, for example, through averaging. This may also help in determining whether the portable computing device **100** is actually in a dark environment as opposed to when light is being blocked from getting to the ALS **146** (e.g., if one sensor is blocked, another sensor is still sensing the ambient environment).

[0081] The thermal sensor **148** can provide temperature data for the device **100** to prevent thermal runaway. The thermal sensor **148** can distinguish between external heat and internal heat. For example, the thermal sensor **148** can distinguish between solar heat received by the device **100** from the sun versus heat produced by the components internal to the device **100**.

[0082] The camera module **134**, with the ALS **146** and thermal sensor **148**, can be mounted to the housing by first pre-loading a foam support into the recess **136** before the camera module **134** is placed in the recess **136**. The foam support can bias the camera module **134** against the display assembly **132**, with the camera module **134** adhered to the display assembly using, for example, PSA. With the ALS **146** and thermal sensor **148** close to the cover glass **106**, there is no need for a light pipe or light guide. The sensors may be placed proximate the display **132** thereby utilizing the window and cover glass **106** that typically covers and protects the display **132**. In this way, the sensors are also hidden from view. A light diffuser can also be provided.

[0083] FIG. **15** illustrates a flow diagram describing process **1500** for assembling internal components for a portable computing device in accordance with the described embodiments. Process **1500** begins at **1502** by receiving housing suitable for enclosing and supporting internal components of the portable computing device. In the described embodiment, the housing can be formed to have a cavity that has a substantially flat bottom surface. The housing can also be formed to have smaller recesses along a peripheral edge portion for receiving components. The components can include, for example, a battery assembly, a main printed circuit board, a main logic board, buttons, speaker module, and so on. The housing can be formed using any well-known machining operation. Once the housing has been received at **1504**, the component can be inserted into the cavity at **1506** and placed in direct contact with the interior surface of the housing at **1508**. Once placed directly onto the substantially flat interior surface of the housing, the component can be attached to the housing at **1510** using any well known attaching process, such as adhering, bonding, epoxy, welding, and so on.

[0084] The various aspects, embodiments, implementations or features of the described embodiments can be used separately or in any combination. Various aspects of the described embodiments can be implemented by software, hardware or a combination of hardware and software. The described embodiments can also be embodied as computer readable code on a computer readable medium for controlling manufacturing operations or as computer readable code on a computer readable medium for controlling a manufacturing line. The computer readable medium is any data storage device that can store data which can thereafter be read by a computer system. Examples of the computer readable medium include read-only memory, random-access memory, CD-ROMs, DVDs, magnetic tape, optical data storage devices, and carrier waves. The computer readable medium can also be distributed over network-coupled computer systems so that the computer readable code is stored and executed in a distributed fashion.

[0085] The foregoing description, for purposes of explanation, used specific nomenclature to provide a thorough understanding of the invention. However, it will be apparent to one skilled in the art that the specific details are not required in order to practice the invention. Thus, the foregoing descriptions of specific embodiments of the present invention are

presented for purposes of illustration and description. They are not intended to be exhaustive or to limit the invention to the precise forms disclosed. It will be apparent to one of ordinary skill in the art that many modifications and variations are possible in view of the above teachings.

[0086] The embodiments were chosen and described in order to best explain the principles of the invention and its practical applications, to thereby enable others skilled in the art to best utilize the invention and various embodiments with various modifications as are suited to the particular use contemplated. It is intended that the scope of the invention be defined by the following claims and their equivalents.

[0087] While the embodiments have been described in terms of several particular embodiments, there are alterations, permutations, and equivalents, which fall within the scope of these general concepts. It should also be noted that there are many alternative ways of implementing the methods and apparatuses of the present embodiments. For example, although an extrusion process is preferred method of manufacturing the integral tube, it should be noted that this is not a limitation and that other manufacturing methods can be used (e.g., injection molding). It is therefore intended that the following appended claims be interpreted as including all such alterations, permutations, and equivalents as fall within the true spirit and scope of the described embodiments.

What is claimed is:

1. A portable computing device, comprising:

a single piece housing having a front opening, the single piece housing further comprising an integral bottom and side walls that cooperate to form a cavity in cooperation with the front opening, wherein the bottom wall has an interior surface that is substantially flat and the side walls are curved;

a plurality of components comprising:

at least a battery cell and a main logic board, wherein the battery cell and main logic board are mounted directly to a central portion of the interior surface of the bottom wall; and

additional components arranged around a peripheral edge of the battery cell and main logic board, the additional components comprising a plurality of sensors, antennae, buttons, switches, and a speaker module;

a display assembly mounted to the housing; and

a transparent cover disposed within the front opening and attached to the housing, wherein a bottom portion of the single piece housing and the mounted display assembly form a protective enclosure for the battery cell.

2. The portable computing device as recited in claim **1**, further comprising a SIM card release mechanism.

3. The portable computing device as recited in claim **1**, wherein the plurality of sensors is connected to a sensor board separated from the main logic board by the battery cell, wherein the sensor board is coupled to the main logic board by a connector.

4. The portable computing device as recited in claim **1**, wherein the housing is metal and the cover is glass.

5. The portable computing device as recited in claim **1**, wherein the housing includes an antenna window formed of radio transparent material, wherein the antenna window replaces a corresponding portion of the housing.

6. The portable computing device as recited in claim **1**, wherein the portable computing device is sized to be carried in one hand of a user and operated by the user's other hand.

7. A portable computing device, comprising:

a single piece housing having a front opening, the single piece housing further comprising an integral bottom and side walls that cooperate to form a cavity in cooperation with the front opening, wherein the bottom wall has an interior surface that is substantially flat;

a plurality of components mounted directly to the interior surface of the bottom wall, wherein the plurality of components comprises a plurality of battery cells and a main logic board in substantially a same plane, wherein the battery cells can expand into a space between battery cells during operation; and

a display assembly disposed within the front opening and mounted to the housing, wherein the housing and the display assembly together form a protective enclosure for the battery cell.

8. The portable computing device as recited in claim **7**, wherein the portable computing device is sized to be carried in one hand of a user and operated by the user's other hand.

9. The portable computing device as recited in claim **7**, wherein the housing is metal and the cover is glass.

10. The portable computing device as recited in claim **9**, further including an antenna window formed of radio transparent material, wherein the antenna window replaces a corresponding portion of the metal housing.

11. The portable computing device as recited in claim **7**, further comprising:

a transparent cover over the display assembly.

12. The portable computing device as recited in claim **7**, further comprising a sensor board coupled to a plurality of sensors, wherein the sensor board is separated from the main logic board by a battery cell.

13. A portable computing device, comprising:

a single piece housing having a front opening, the single piece housing further comprising an integral bottom and side walls that cooperate to form a cavity in cooperation with the front opening, wherein the bottom wall has an interior surface that is substantially flat surrounded by a plurality of recesses in a peripheral edge portion;

a plurality of components, wherein at least one of the components is mounted directly to the substantially flat interior surface of the bottom wall and at least one of the components is mounted in a recess in the peripheral edge portion; and

a display system and transparent cover disposed within the front opening and attached to the housing.

14. The portable computing device as recited in claim **13**, wherein the component mounted directly to the substantially flat interior surface of the bottom wall is a battery cell and the component mounted in the recess is an antenna.

15. The portable computing device as recited in claim **14**, further comprising foam between the antenna and the housing.

16. The portable computing device as recited in claim **15**, wherein the single piece housing further comprises a plurality of features for aligning a component on the substantially flat interior surface of the bottom wall.

17. The portable computing device as recited in claim **16**, wherein the plurality of features align a main logic board on the substantially flat interior surface of the bottom wall.

18. The portable computing device as recited in claim **13**, wherein a battery assembly and a main logic board are mounted directly to the substantially flat interior surface of

the bottom wall and a plurality of antennae and sensors are mounted around the peripheral edge portion of the housing.

19. The portable computing device as recited in claim **18**, wherein the plurality of sensors are connected to a sensor board that is separated from the main logic board by another component, wherein the sensor board is coupled to a the main logic board by a connector.

20. The portable computing device as recited in claim **19**, wherein the connector is positioned in a space between two battery cells.

21. A method, comprising:

receiving a housing having a cavity for receiving internal components, the housing having a cavity with a substantially flat interior bottom surface.

receiving a plurality of component to be mounted to the substantially flat interior bottom surface, wherein the plurality of components includes a battery cell and a main logic board; and

bonding the components directly to the interior bottom surface of the housing, wherein the battery cell and the main logic board are in substantially a same plane.

22. The method as recited in claim **21**, further comprising:

placing a cover within the front opening; and

attaching the cover to the housing without a bezel.

23. The method as recited in claim **21**, wherein the portable computing device is sized to be carried in one hand of a user and operated by the user's other hand.

24. The method as recited in claim **21** wherein the housing is metal and the cover is glass.

25. The method as recited in claim **22**, further comprising:

aligning a display assembly within the front opening using a temporary alignment fixture;

securing the display assembly to the housing;

and removing the temporary alignment fixture before placing the cover within the front opening.

26. The portable computing device as recited in claim **24** further comprising:

placing a display unit having a display screen within the front opening such that the display screen is visible through the glass cover.

* * * * *