US007787618B2

(12) **United States Patent**
Jorgensen

(10) **Patent No.: US 7,787,618 B2**
(45) **Date of Patent: Aug. 31, 2010**

(54) **PORTABLE ELECTRONIC DEVICE**

(75) Inventor: **Claus H. Jorgensen**, Frederiksberg (DK)

(73) Assignee: **Nokia Corporation**, Espoo (FI)

(*) Notice: Subject to any disclaimer, the term of this patent is extended or adjusted under 35 U.S.C. 154(b) by 861 days.

(21) Appl. No.: **11/393,510**

(22) Filed: **Mar. 29, 2006**

(65) **Prior Publication Data**

US 2007/0265028 A1 Nov. 15, 2007

(51) **Int. Cl.**
H04M 1/00 (2006.01)
H04M 9/00 (2006.01)

(52) **U.S. Cl.** **379/433.13**; 455/575.3

(58) **Field of Classification Search** 379/433.01, 379/433.08, 433.11, 433.13; 455/90.3, 575.1, 455/575.3

See application file for complete search history.

(56) **References Cited**

U.S. PATENT DOCUMENTS

D427,171	S	6/2000	Frye et al.	D14/138
6,219,257	B1	4/2001	Arnold	361/814
2001/0034242	A1 *	10/2001	Takagi	455/550
2003/0199290	A1	10/2003	Viertola	455/575.1
2004/0253508	A1	12/2004	Kohri et al.	429/100
2005/0282593	A1	12/2005	Spence et al.	455/575.3

FOREIGN PATENT DOCUMENTS

EP	1209880	A3	2/2003
EP	1533983	A1	5/2005
EP	1496672	A1	1/2006
GB	2391740	A	2/2004
JP	2005-318064	A	11/2005

* cited by examiner

Primary Examiner—Tuan D Nguyen
(74) *Attorney, Agent, or Firm*—Harrington & Smith

(57) **ABSTRACT**

A portable electronic device including a first section, a second section and a connecting section. The first section has a user input section and a first tubular housing member. The first tubular housing member forms a majority of opposite exterior lateral sides of the first section. The second section has a display and a second tubular housing member. The second tubular housing member forms a majority of opposite exterior lateral sides of the second section. The connecting section movably connects the second section with the first section. The first tubular housing member at least partially houses the user input section. The second tubular housing member at least partially houses the display.

20 Claims, 6 Drawing Sheets

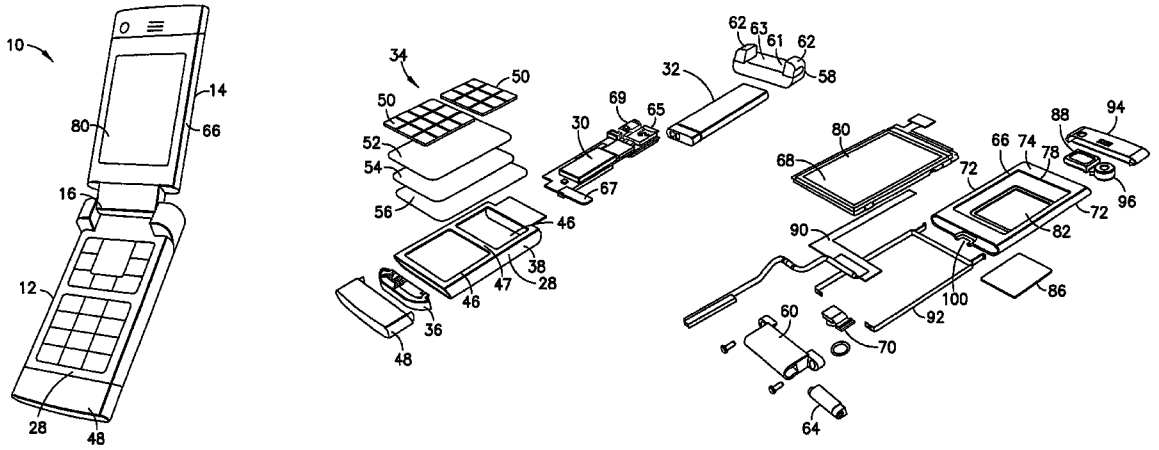

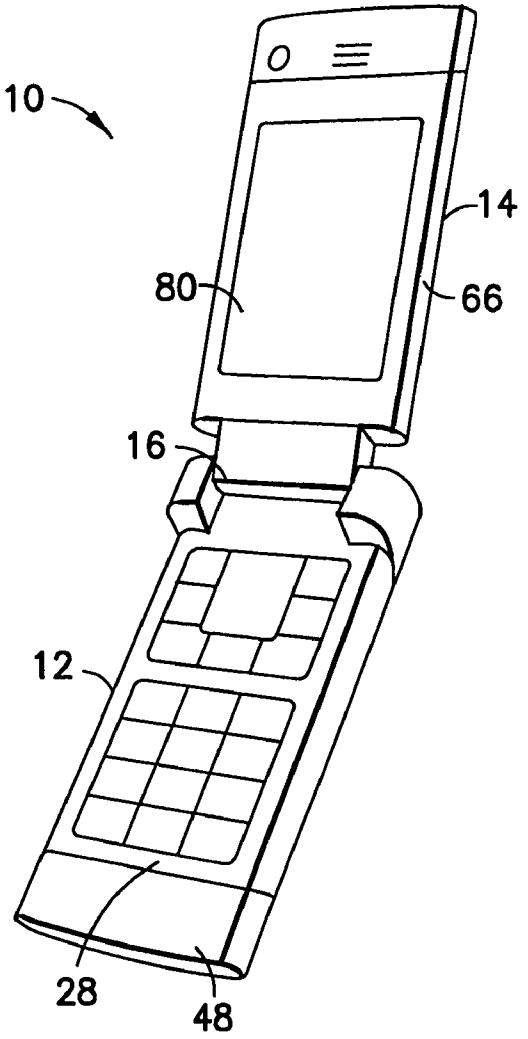

FIG. 1

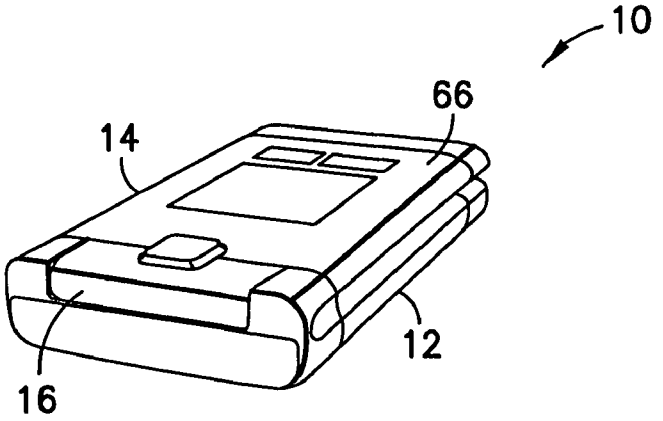

FIG. 2

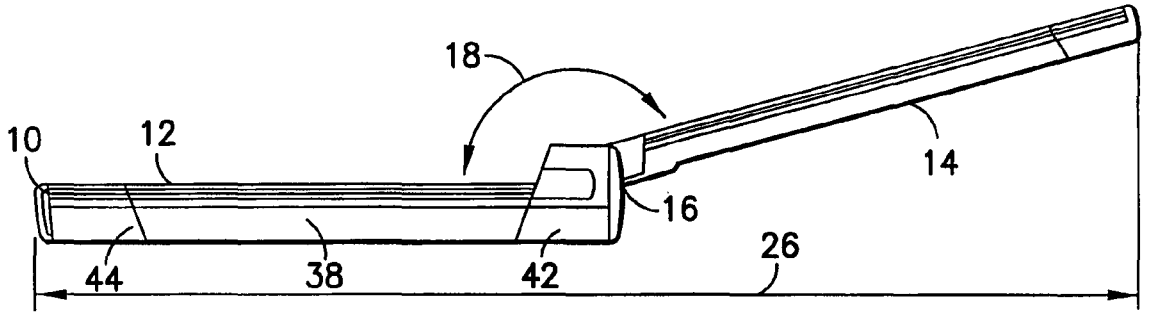

FIG.3

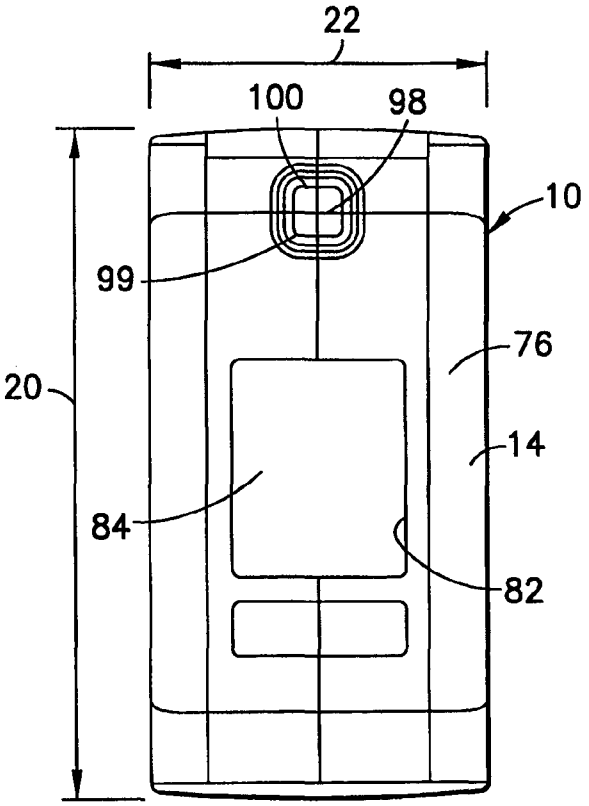

FIG.4

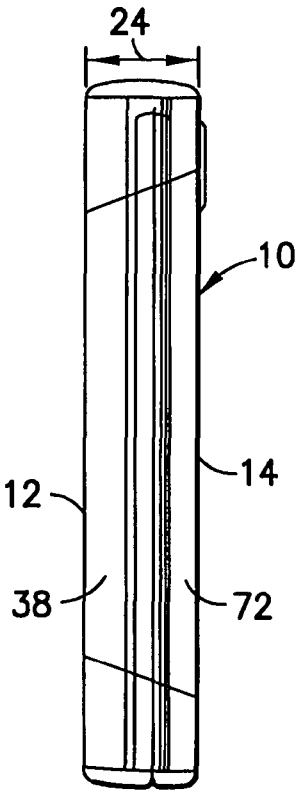

FIG.5

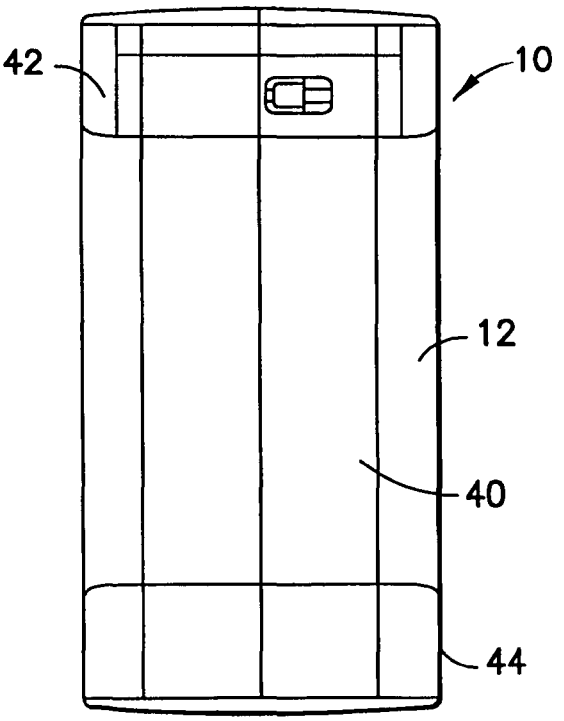

FIG.6

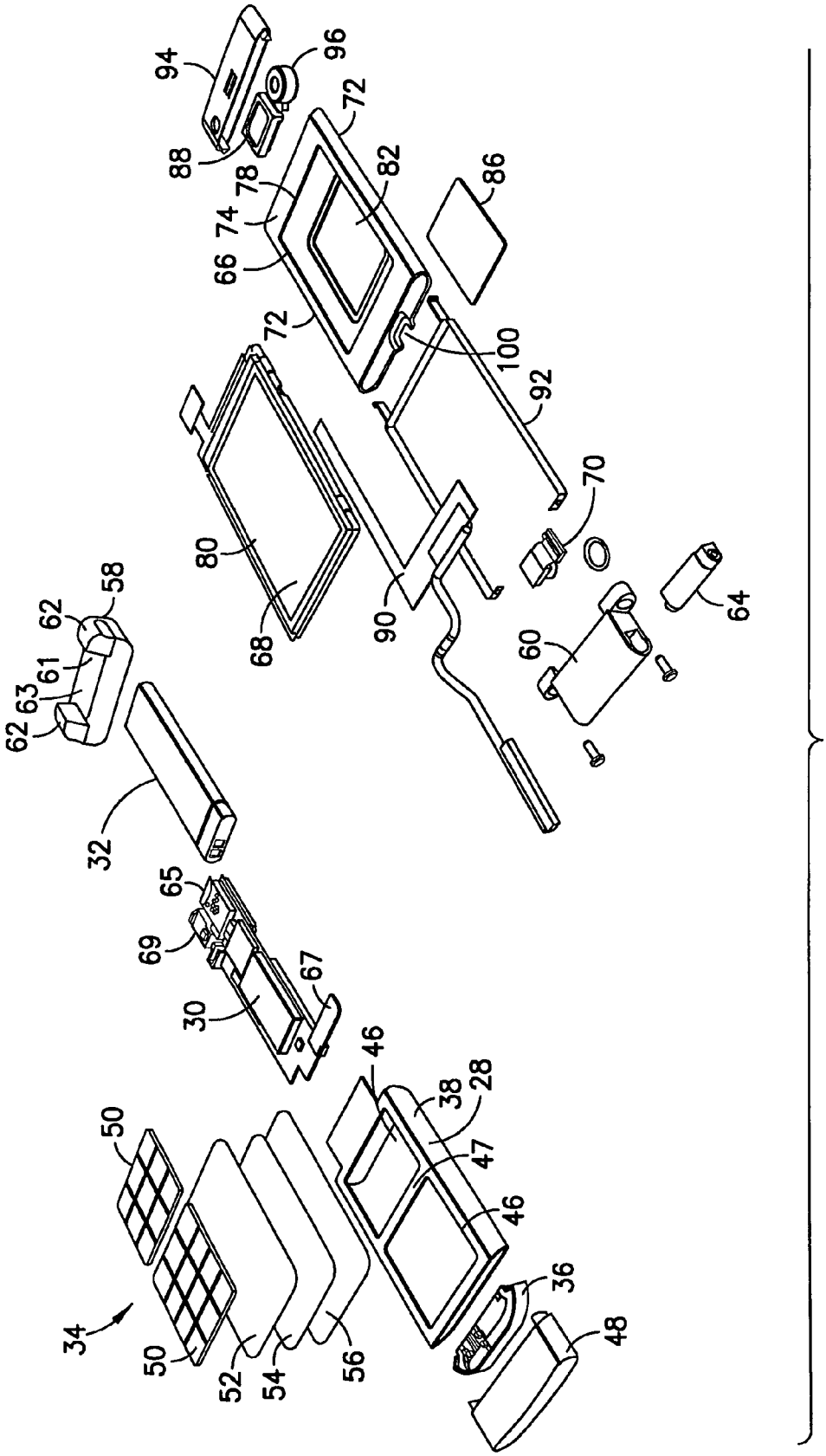
94
96
88
72
78
82
86
74
66
72
100
92
70
80
68
90
60
64
58
62
61
63
62
32
65
69
67
30
46
38
28
50
47
46
36
34
50
52
54
56
48

FIG. 7

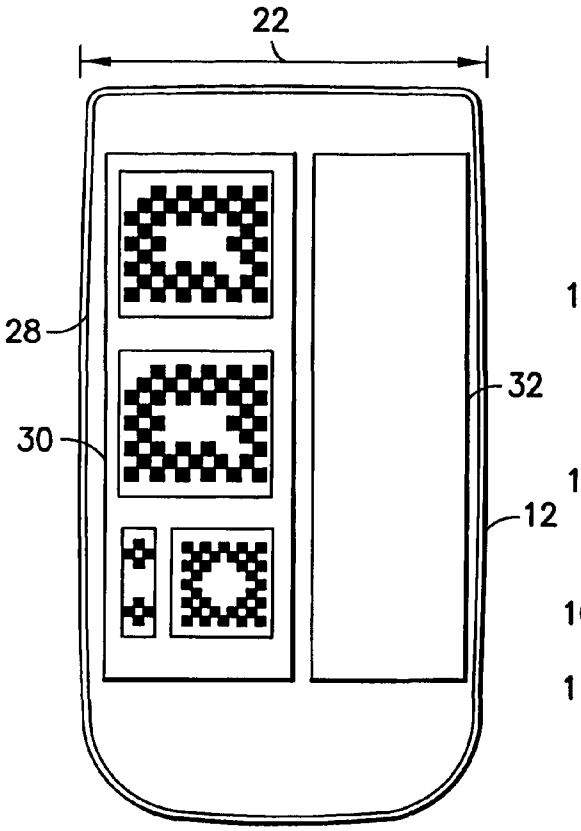

FIG.8

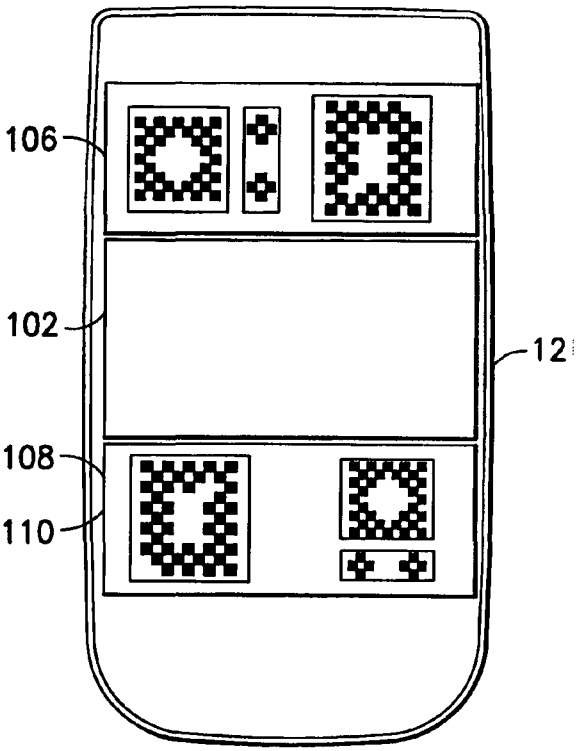

FIG.10

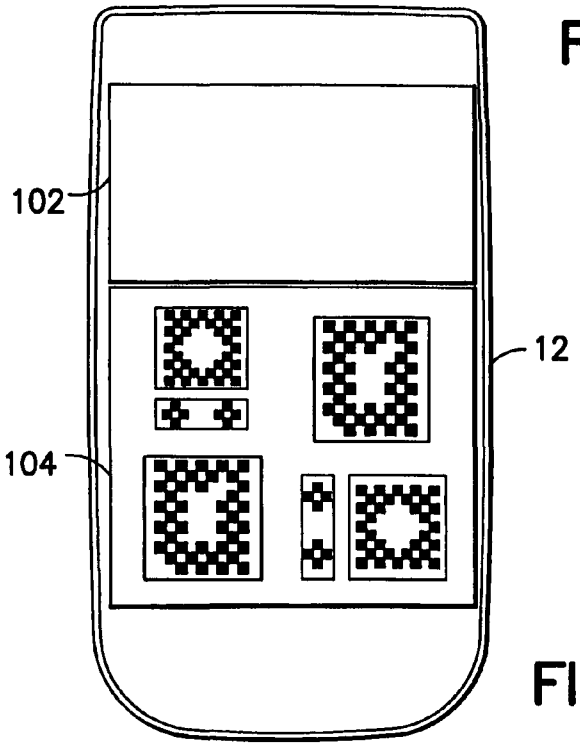

FIG.9

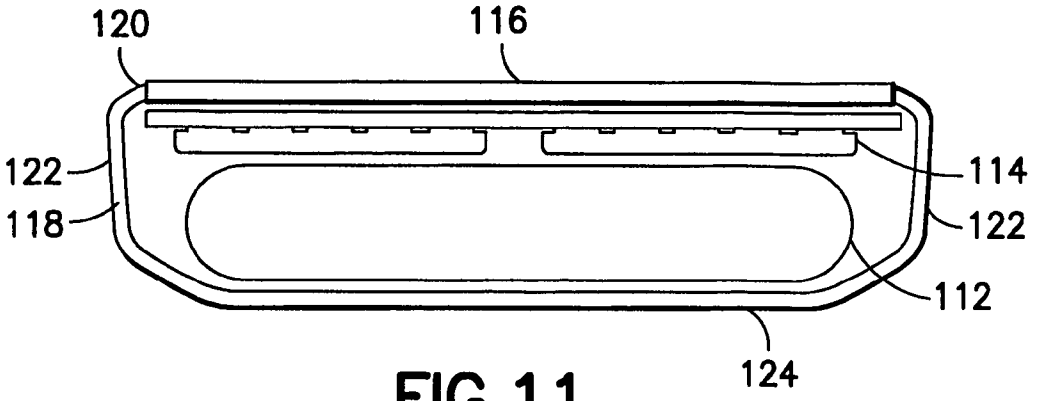

FIG. 11

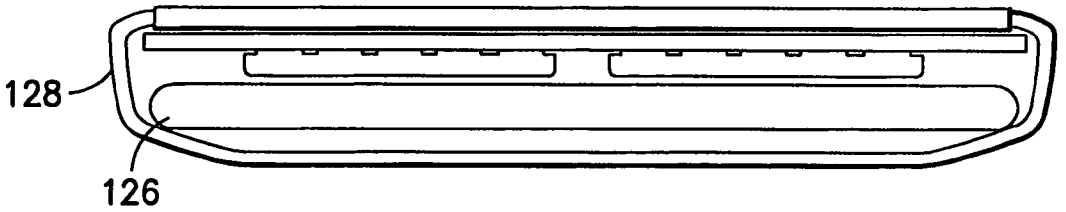

FIG. 12

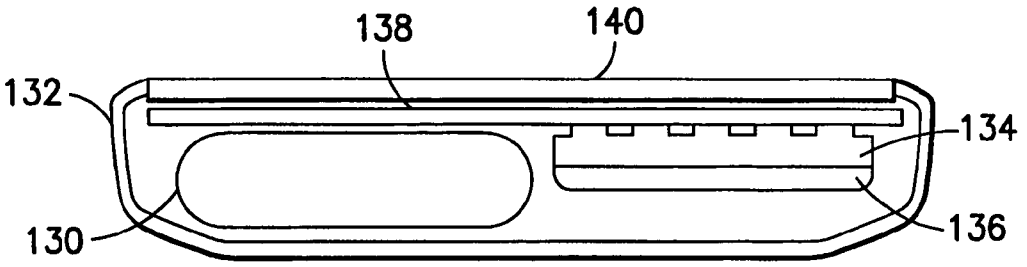

FIG. 13

PORTABLE ELECTRONIC DEVICE

BACKGROUND OF THE INVENTION

1. Field of the Invention

The invention relates to a portable electronic device and, more particularly, to form factor configuration of a portable electronic device.

2. Brief Description of Prior Developments

Ultra thin telephone products have emerged in the market, pioneering a new approach in mechanical architecture for flip-phone designs (also known a clam-shell handset). Priority for these products is mechanical thinness, allowing the feature set and industrial design to be adjusted to suit this goal. New flip-phones include the Motorola RAZR, the Motorola V3, the Motorola V3x, the Samsung SCH-V740, the NEC L1. For example, the Motorola RAZR has a thickness of about 0.54 inch. Candy-bar shaped mobile phones can have smaller thicknesses, such as the Motorola SLIVR with a thickness of about 0.45 inch and the Motorola SCALPEL with a thickness of about 0.25 inch.

There is a desire for an architecture for an ultrathin fold product, such as a flip-phone style of mobile telephone, which can maintain aesthetic balance in proportions, and allow added thickness to avoid a "squeezed" appearance as seen with the RAZR™ mobile telephone.

SUMMARY OF THE INVENTION

In accordance with one aspect of the invention, a portable electronic apparatus is provided comprising a first section comprising electronics; a second section movably connected to the first section by a hinge section, wherein the second section comprises a display; and an access entry provided in the hinge section adapted to allow insertion of an electrical device through the hinge section and into electrical connection with an electrical connector inside the first section.

In accordance with another aspect of the invention, a portable electronic device is provided including a first section, a second section and a connecting section. The first section has a user input section and a first tubular housing member. The first tubular housing member forms a majority of opposite exterior lateral sides of the first section. The second section has a display and a second tubular housing member. The second tubular housing member forms a majority of opposite exterior lateral sides of the second section. The connecting section movably connects the second section with the first section. The first tubular housing member at least partially houses the user input section. The second tubular housing member at least partially houses the display.

In accordance with another aspect of the invention, a mobile telephone is provided comprising an engine section comprising a printed circuit board, a transceiver, a processor and a memory; a battery located adjacent the engine section; and a user input section comprising a keypad located directly above the engine section and the battery. The user input section is located directly opposite the battery without a portion of the engine section therebetween.

In accordance with another aspect of the invention, a portable electronic device is provided comprising a first section; a second section movably connected to the first section by a hinge; and a camera. The hinge comprises a first hinge member connected to the first section and a second hinge member connected to the second section. The camera is connected to the second section. The camera is housed at an exterior side of the portable electronic device by a junction of a portion of the second hinge member and a portion of an exterior housing of the second section.

BRIEF DESCRIPTION OF THE DRAWINGS

The foregoing aspects and other features of the invention are explained in the following description, taken in connection with the accompanying drawings, wherein:

FIG. **1** is a perspective view of a mobile telephone comprising features of the invention;

FIG. **2** is a perspective view of the telephone shown in FIG. **1** is a closed configuration;

FIG. **3** is a side view of the telephone shown in FIG. **1**;

FIG. **4** is a front view of the telephone shown in FIG. **2**;

FIG. **5** is a side view of the telephone shown in FIG. **2**;

FIG. **6** is a rear view of the telephone shown in FIG. **2**;

FIG. **7** is an exploded perspective view of the telephone shown in FIGS. **1-6**;

FIG. **8** is a schematic view showing the layout of the engine and the battery of the telephone shown in FIGS. **1-7**;

FIG. **9** is a schematic view similar to FIG. **8** showing an alternate embodiment of the layout of the engine and the battery;

FIG. **10** is a schematic view similar to FIG. **8** showing another alternate embodiment of the layout of the engine and the battery;

FIG. **11** is a schematic view showing an alternate embodiment of the layout of the engine and the battery;

FIG. **12** is a schematic view similar to FIG. **11** showing an alternate embodiment of the layout of the engine and the battery; and

FIG. **13** is a schematic view similar to FIG. **11** showing an alternate embodiment of the layout of the engine and the battery.

DETAILED DESCRIPTION OF THE PREFERRED EMBODIMENTS

Referring to FIG. **1**, there is shown a perspective view of a portable electronic device **10** incorporating features of the invention. Although the invention will be described with reference to the exemplary embodiments shown in the drawings, it should be understood that the invention can be embodied in many alternate forms of embodiments. In addition, any suitable size, shape or type of elements or materials could be used.

In the embodiment shown, the device **10** comprises a hand-held mobile telephone. However, in alternate embodiments, features of the invention could be used in other types of portable electronic devices, such as a PDA or a hand-held gaming device for example. The telephone **10** is a flip-phone type of telephone comprising a first section **12** connected to a second section **14** by a movably connecting section **16**. In this embodiment the connecting section **16** is a hinge. However, in alternate embodiments, any suitable type of movable connecting section could be provided. FIG. **1** shows the telephone **10** in an open configuration. FIG. **2** shows the telephone **10** in a closed configuration.

Referring also to FIGS. **3-6**, in the closed configuration, the second section **14** lies directly opposite the first section **12**. The hinge **16** allows the second section **14** to pivot open to the open configuration at an angle **18** of about 165°. However, in alternate embodiments, the angle **18** could have any suitable angle. In the closed configuration, the telephone has a height **20** of about 88.7 mm, a width **22** of about 45 mm, and a thickness **24** of about 15 mm. In the open configuration, the

telephone has a length **26** of about 166 mm. However, in alternate embodiments, any suitable dimensions could be provided. As seen with reference to FIG. **3**, the design shown has a substantially uniform thickness lower section **12** and a substantially uniform thickness upper section **14** along their entire lengths except for at the hinge **16**. As seen best in FIGS. **5** and **14**, when the two sections **12**, **14** are closed, the telephone **10** has a block shape with grooves along the joints at the lateral sides, but with the ends of the sections **12**, **14** being at the same bottom end of the closed shape.

Referring also to FIG. **7**, there is shown an exploded perspective view of the telephone **10** for details of how the small thickness **24** of about only 15 mm in a flip-phone design can be accomplished. The first section **12** generally comprises a first housing member **28**, an engine **30**, a battery **32**, a user input section **34**, and an antenna module **36**. Additional components could be provided. The first housing member **28** generally comprises a one-piece tubular member. In a preferred embodiment, the tubular member is comprises of metal, such as aluminum for example. In one type of embodiment, the tubular metal member could be formed from an extruded member with holes punched into it after it is extruded. The first housing member **28** forms a majority of opposite exterior lateral sides **38** and a rear side **40** of the first section **12** (except at top and bottom ends **42**, **44** of the first section). The front side of the first housing member **28** has holes **46** therethrough for portions of the user input section **34** to be located in the holes. Because of the tubular shape of the first housing member **28**, the first housing member **28** has substantially open top and bottom apertures, which are slanted in the embodiment shown.

The antenna module **36** is located at the bottom aperture into the first housing member **28** and enclosed by the antenna cover **48**. The antenna cover **48**, such as made of plastic, is attached to the first housing member **28** at the bottom aperture to keep the antenna module **36** attached to the rest of the telephone. In one type of embodiment, the antenna module could be a STINGRAY antenna from RaySat, Inc. However, any suitable antenna module could be provided.

The user input section generally comprises keymats **50**, an EL backlight foil **52**, a keymat dome sheet **54** and a keymat stiffener **56**. However, in alternate embodiments, any suitable user input section could be provided. The keymats **50** are located in the holes **46** of the first housing member **28**. The other components of the user input section are located inside the first housing member **28**. A cross bar portion **47** of the first housing member **28** is located between the two keymats **50**.

The engine **30** generally comprises a printed circuit board, a transceiver, a processor, and a memory, among other components. Referring also to FIG. **8**, the width of the engine **30** is only about less than half the width **22** of the telephone. The battery **32** is located adjacent the lateral side of the engine **30** and is also about less than half the width **22** of the telephone. Unlike conventional telephones which have the engine located above the battery, the configuration of the side-by-side engine/battery allows the battery and the engine to have a practical design thickness and still provide a reduced thickness **24** as compared to conventional flip-phones. The keypads are located above the engine section **30** and the battery **32**, wherein the user input section **34** is located directly opposite the battery **32** without a significant portion of the engine section **30** therebetween.

The connecting section **16** has a first hinge member **58** and a second hinge member **60**. The first hinge member **58** is connected to the top end of the first frame member **28** to substantially close the open top end of the first frame member **28**. The first hinge member **58** also comprises a door **61** for access to the battery **32** such that the battery can be removed, and a door **63** for access to the engine **30** for inserting and removing an electronic module **65**, such as a SIM card or flash memory or other memory card. The doors **61**, **63** are located below the shoulders **62** such that there is a path at the connecting section **16** past the second hinge member **60**. In an alternate embodiment, the connecting section **16** could have only one door; for the battery or for the electronic module or both. The door(s) is preferably connected to the rest of the first hinge member **58** by a living hinge. However, in alternate embodiments any suitable type of doorway system could be provided. In other alternate embodiments any suitable access entry could be provided. In a preferred embodiment the door (s) support the electronic device (such as the battery **32** and/or electronic module **65**). The engine **30** comprises electrical connectors **67** and **69** for the electronic devices **32** and **65** to connect to inside the first section **12**.

The first hinge member **58** has shoulders **62** with interior facing apertures to receive ends of the hinge module **64**. The hinge module **64** is mounted in the second hinge member **60**. The second hinge member **60** is sized and shaped to pivotably fit between the shoulders **62**. In an alternate embodiment any suitable type of hinge assembly could be provided, such as disclosed in U.S. Pat. No. 6,900,981, and U.S. patent application Ser. Nos. 10/610,978, 11/055,914, 11/077,674, and 11/253,017, for example, which are hereby incorporated by reference in their entireties. In an alternate embodiment, the electronic device insertion and removal feature through a movable connection section of the invention could be used in other types of telephones having movable sections including, for example, a slide phone such as shown in U.S. Pat. No. Des. 427,171 which is hereby incorporated by reference in its entirety, or could be used in other apparatus, such as a gaming device or PDA having two movable sections connected by a hinge or connecting section.

The second section **14** generally comprises a second housing member **66**, a display module **68** and a camera **70**. The second housing member **66** preferably comprises a one-piece member having a general tubular shape. In a preferred embodiment, the tubular member is comprises of metal, such as aluminum for example. In one type of embodiment, the tubular metal member could be formed from an extruded member with holes punched into it after extrusion. The second housing member **66** forms portions of opposite exterior lateral sides **72**, a front side **74** and a rear side **76** of the second section **14**. The front side of the second housing member **66** has a hole **78**. A front portion **80** of the display module **68** can be located for viewing through the hole **78**. The rear side of the second housing member **66** has a hole **82** therethrough. A rear portion **84** (see FIG. **4**) of the display module **68** is located for viewing through the hole **82**. Front portion **80** forms a main display, and rear portion **84** forms a sub-display. A window **86** can be glued onto the sub-display **84**. Because of the tubular shape of the second housing member **66**, the second housing member **66** has substantially open top and bottom apertures, which are slanted in the embodiment shown.

The display module **68**, camera **70** and a speaker or sound transducer **88** are coupled to the engine **30** by a flex cable assembly **90** which extends through the hinge **16**. A mounting bracket **92** is provided for mounting the display module **68** inside the second housing member **66** between the second hinge member **60** and a speaker cover **94** at opposite ends of the second housing member **66**. An optional second camera **96** could also be provided.

The camera **70** extends to the rear side **76** of the second section **14**. The camera **70** is housed at an exterior side of the

portable electronic device by a junction **98** of a cutout portion **99** of the second hinge member **60** and a cutout portion **100** of the second tubular housing member **66**. The cutout portions **99**, **100** project slightly from the rear side of the telephone to form a protrusion **142** (see FIG. **14**). By providing a projecting portion of the housing for the camera, rather than making the housing flush with the camera, this allows the rest of the telephone to have the reduced thickness **24**, but still use a standard size camera.

Referring also to FIGS. **9-10**, alternate embodiments of configuration of the battery relative to the engine of FIG. **8** is shown. FIG. **10** shows an embodiment where the battery **102** and engine **104** are located in the first section **12** in a side-by-side configuration. This side-by-side configuration comprises the battery **102** being located at a top side of the engine **104** proximate the hinge end of the first section. FIG. **11** shows an embodiment where the battery **102** is located between two portions **106**, **108** of the engine **110**. Thus a split side-by-side configuration is provided. In both of these alternate embodiments the keypad is located above the engine section and the battery, wherein the user input section is located directly opposite the battery without a substantial portion of the engine section therebetween.

FIGS. **11-13** show other alternate embodiments of positioning the battery relative to the engine. In FIG. **11** the battery **112** is located below the engine **114**. The keypad **116** is located above the engine **114**. The components **112**, **114**, **116** are housed in a one-piece metal tubular housing member **118**. The keypad is located at a hole through the front side **120** of the housing member **118**. Otherwise, the housing member **118** forms enclosed lateral exterior sides **122** and rear side **124**.

FIG. **12** shows an embodiment similar to FIG. **11**. However, in this embodiment the battery **126** is thinner and wider than the battery **112**. The tubular housing member **128** is thinner and wider than the tubular housing member **118**. FIG. **13** shows another alternate embodiment. In this embodiment the battery **130** is about half the width of the tubular housing member **132**. The engine **134** comprises a portion **136** located at the lateral side of the battery **130** and another portion **138** located between the battery and the keypad **140**. The configurations shown in FIGS. **11-13** could be used in candy-bar style telephone handsets as well as flip-phone style handsets.

One of the features of the invention is the use of tubular members to form the major housing components of the first and second sections of the flip-phones. The tubular housing members provide an increased strength than conventional housing designs. This allows the reduction in side of the housing components versus conventional housing components and, thus, a reduction in the thickness **24** of the telephone. In addition, the side-by-side positioning of the battery/engine can further allow a reduction in thickness of the handset versus conventional stacked battery/engine handsets.

With the present invention a user exchangeable battery and/or cards (SIM, flash and other memory cards) can be inserted and removed through the hinge end in a portable terminal. The housing of a fold phone can be extruded in one material. Extruding a housing in one material and having a user exchangeable battery (and cards) through a hinge end can be provided. With the invention a battery can be located next to the PWB on a lateral side of the phone.

It should be understood that the foregoing description is only illustrative of the invention. Various alternatives and modifications can be devised by those skilled in the art without departing from the invention. Accordingly, the invention is intended to embrace all such alternatives, modifications and variances which fall within the scope of the appended claims.

What is claimed is:

1. An apparatus comprising:

a first section comprising electronics;

a second section movably connected to the first section by a hinge section, wherein the second section comprises a display, wherein the hinge section comprises a first hinge member pivotably connected to a second hinge member; and

wherein the first hinge member comprises an access entry adapted to allow insertion of an electrical device through the access entry and into electrical connection with an electrical connector inside the first section.

2. An apparatus as in claim **1** wherein the access entry comprises a movable door on the hinge section.

3. An apparatus as in claim **2** wherein the access entry comprises a living hinge connecting the door to the rest of the hinge section.

4. An apparatus as in claim **1** wherein the access entry is sized and shaped to allow insertion of an electronic memory module through the access entry, and the electrical connector is adapted to electrically connect to the electronic module.

5. An apparatus as in claim **1** wherein the access entry is sized and shaped to at least partially directly physically support the electrical device when the electrical device is fully inserted into the apparatus.

6. An apparatus as in claim **1** wherein the access entry comprises a pivotable door on the hinge section.

7. An apparatus as in claim **1** wherein the access entry is adapted to allow modular insertion and removal of the electrical device through the access entry.

8. An apparatus comprising:

a first section comprising electronics;

a second section movably connected to the first section by a hinge section, wherein the second section comprises a display, wherein the hinge section comprises a first hinge member pivotably connected to a second hinge member; and

wherein the first hinge member comprises an access entry adapted to allow insertion of an electrical device through the hinge section and into electrical connection with an electrical connector inside the first section,

wherein the access entry is sized and shaped to allow insertion of a battery through the access entry, and the electrical connector is adapted to electrically connect to the battery.

9. A portable electronic device comprising:

a first section having a user input section and a first one-piece tubular housing member, wherein the first tubular housing member forms a majority of opposite exterior lateral sides of the first section;

a second section having a display and a second tubular housing member, wherein the second tubular housing member forms a majority of opposite exterior lateral sides of the second section; and

a connecting section movably connecting the second section with the first section,

wherein the first tubular housing member at least partially houses the user input section, and wherein the second tubular housing member at least partially houses the display, and wherein the first and second sections are movably connected to each other between an open configuration and a closed configuration.

10. A portable electronic device as in claim **9** wherein at least one of the first and second tubular housing members comprises a metal member.

11. A portable electronic device as in claim **10** wherein the first tubular housing members comprises an extruded member.

12. A portable electronic device as in claim **9** wherein the connecting section comprises a hinge with a first hinge member forming a cap to an open end of the first tubular housing member and a second hinge member forming a cap to an open end of the second tubular housing member.

13. A portable electronic device as in claim **9** wherein the first section comprises:

an engine section comprising a printed circuit board, a transceiver, a processor and a memory;

a battery located adjacent the engine section; and

the user input section comprises a keypad located above the engine section and the battery, wherein the user input section is located directly opposite the battery without a portion of the engine section therebetween.

14. A portable electronic device as in claim **9** wherein the connecting section comprises a hinge, wherein the hinge comprises a first hinge member connected to the first section and a second hinge member connected to the second section; and the portable electronic device further comprises a camera connected to the second section, wherein the camera is housed at an exterior side of the portable electronic device by a junction of a portion of the second hinge member and a portion of the second tubular housing member.

15. A portable electronic device as in claim **9** wherein the portable electronic device comprises a mobile telephone having a transceiver.

16. A portable electronic device as in claim **9** wherein the connecting section comprises an access entry provided in the connecting section adapted to allow insertion of an electrical device through the connecting section and into electrical connection with an electrical connector inside the first section.

17. A portable electronic device comprising:

a first section;

a second section movably connected to the first section by a hinge, wherein the hinge comprises a first hinge member connected to the first section and a second hinge member connected to the second section; and

a camera connected to the second section, wherein the camera is housed at a first exterior side of the portable electronic device by a junction of a portion of the second hinge member located at the first exterior side and a portion of an exterior housing of the second section located at the first exterior side.

18. A portable electronic device as in claim **17** wherein the first section comprises:

a first tubular housing member, wherein the first tubular housing member forms a majority of opposite exterior lateral sides of the first section, and located at the first tubular section:

an engine section comprising a printed circuit board, a transceiver, a processor and a memory;

a battery located adjacent the engine section; and

a user input section comprising a keypad located directly above the engine section and the battery, wherein the user input section is located directly opposite the battery without a portion of the engine section therebetween.

19. A portable electronic device as in claim **17** wherein the first section comprises a tubular metal housing member forming a majority of opposite exterior lateral sides of the first section, and wherein the second section comprises a tubular metal housing member forming a majority of opposite exterior lateral sides of the second section.

20. A portable electronic device as in claim **17** wherein the first and second sections each comprises tubular metal exterior housing members comprising extruded metal members.

* * * * *