UNITED STATES INTERNATIONAL TRADE COMMISSION
WASHINGTON, DC

The Honorable Charles E. Bullock
Chief Administrative Law Judge

In the Matter of **Certain Electronic Devices, Including Mobile Phones, Tablet Computers and Components Thereof**	**Inv. No. 337-TA-1038**

COMPLAINANT NOKIA TECHNOLOGIES OY'S REBUTTAL CLAIM CONSTRUCTION BRIEF

TABLE OF CONTENTS

TABLE OF EXHIBITS vi

INTRODUCTION 1

ARGUMENT 2

I. U.S. PATENT NO. 8,036,619 2

A. "multi-mode communication device" / "multi-mode device" / "multi-mode radio frequency device" (claims 18, 21, 60) 2

B. "one of a plurality of modes" / "operational mode of [a/the] radio frequency communications device" / "mode of operation" (claims 1, 7, 18, 46, 60, 79) 8

C. "a value of Vcc is set so as to minimize power consumption as a function of an amount of allowable local oscillator phase noise" (claim 1) 13

D. "the values of Vcc and Vbias are set so as to minimize power consumption as a function of an amount of allowable local oscillator phase noise" (claim 7) 17

E. "said variable supply voltage having a magnitude that is controlled to operate said voltage controlled oscillator with a current consumption that is established as a function of a voltage controlled oscillator output signal quality needed for operation in one of a plurality of modes by adjusting the phase noise of the voltage controlled oscillator" (claim 46) 18

II. U.S. PATENT NO. 6,480,700 20

A. "said second amplifier become self-biased" / "the second amplifier becomes self-biased" (claims 1, 16) 20

1. Apple's construction is not supported by the specification. 22

2. Apple's misleading statements about the specification show how far it must go to support its theories. 24

3. Apple's remaining arguments are without merit. 25

B. "large signal mode" (claims 1, 16) 26

C. "small signal mode" / "small-signal mode" (claims 1, 2-4, 16) 28

Amazon.com, Inc., Amazon.com Services LLC - Ex. 1016, Page 000002

D. "indications of the first amplified radio frequency signal" (claims 1, 2, 16) 30

III. U.S. PATENT NO. 7,653,366 32

A. Apple Mischaracterizes the File History....32

1. The file history makes clear that the applicant did not limit claim 1 to only the "embodiments" of Figures 27B and 30B. 33

2. Apple's alleged disavowal theory cannot be reconciled with the dependent claims....37

(i) Apple's alleged disavowal theory is in direct conflict with dependent Claims 15 and 16. 38

(ii) Apple's alleged disavowal theory is in direct conflict with dependent Claim 17. 39

(iii) Apple's alleged disavowal theory would render dependent Claims 11, 13, and 20 meaningless....40

B. "the ratio of x to y is optimized for particular application constraints" (claim 1) 42

1. Apple's cited cases are inapposite and easily distinguishable. 43

C. "slave mode controlled by the linear mode part" (claims 1, 13) 46

1. Nokia's construction should be adopted over the Staff's construction...46

2. Apple's proposed construction is incorrect....49

D. "master mode" (claims 1, 4) 50

E. "effectively slaved to operation of the switch mode part" (claim 17) 51

IV. U.S. PATENT NO. 9,473,602 52

A. Apple mischaracterizes the 602 Patent technology background....52

B. "housing forming enclosed exterior lateral sides and a rear side" / "housing…forming enclosed exterior lateral sides and a rear side" (claims 1, 15, 22) 57

CONCLUSION 63

Amazon.com, Inc., Amazon.com Services LLC - Ex. 1016, Page 000003

TABLE OF AUTHORITIES

Page(s)

CASES

3form, Inc. v. Lumicor, Inc.,
2017 WL 443652 (Fed. Cir. 2017).....16

Aristocrat Techs. Australia Pty Ltd. v. Int'l Game Tech.,
709 F.3d 1348 (Fed. Cir. 2013).....26

CAE Screenplates, Inc. v. Heinrich Fiedler GmbH & Co. KG,
224 F.3d 1308 (Fed. Cir. 2000).....26

Carl Zeiss Vision Int'l GMBH v. Signet,
2008 Markman 4951984 (S.D. Cal. June 2, 2008).....46

Cascades Computer Innovation LLC v. Dell Inc.,
2014 WL 26288 (N.D. Ill. Jan. 2, 2014).....45

Certain Baseband Processor Chips & Chipsets,
Inv. No. 337-TA-543, USITC Pub. No. 4258, 2011 WL 6175074 (Oct. 10, 2006).....6

Comcast IP Holdings I LLC v. Spring Commc'ns Co., L.P.,
850 F.3d 1302 (Fed. Cir. 2017).....36

CytoLogix Corp. v. Ventana Med. Sys., Inc.,
424 F.3d 1168 (Fed. Cir. 2005).....28

Dane Techs., Inc. v. Gatekeeper Sys., Inc.,
2014 WL 3420788 (D. Minn. July 14, 2014).....45

Datamize, LLC v. Plumtree Software, Inc.,
417 F.3d 1342, 1349 (Fed. Cir. 2005).....44

DDR Holdings LLC v. Hotels.com, L.P.,
773 F.3d 1245 (Fed. Cir. 2014).....16, 43

Digital-Vending Servs. Int'l, LLC v. Univ. of Phoenix, Inc.,
672 F.3d 1270 (Fed. Cir. 2012).....26

Enzo Biochem, Inc. v. Applera Corp.,
599 F.3d 1325 (Fed. Cir. 2010).....43

Hill-Rom Services, Inc. v. Stryker Corp.,
755 F.3d 1367 (Fed. Cir. 2014).....48

In re Gardner,
427 F.2d 786 (C.C.P.A. 1970) 43

In re TR Labs Patent Litig.,
2014 WL 3500596 (D.N.J. July 14, 2014).....44

Inline Plastics Corp. v. EasyPak, LLC,
799 F.3d 1364 (Fed. Cir. 2015).....36

Innova/ Pure Water, Inc. v. Safari Water Filtration Sys., Inc.,
381 F.3d 1111 (Fed. Cir. 2004).....26

Interval Licensing LLC v. AOL, Inc.,
766 F.3d 1364 (Fed. Cir. 2014).....43

Liebel-Flarsheim Co. v. Medrad, Inc.,
358 F.3d 898 (Fed. Cir. 2004).....60

Marine Polymer Techs., Inc. v. HemCon, Inc.,
672 F.3d 1350 (Fed. Cir. 2012).....41

Mass. Institute of Tech. v. Shire Pharm., Inc.,
839 F.3d 1111 (Fed. Cir. 2016).....36

Medrad, Inc. v. MRI Devices Corp.,
401 F.3d 1313 (Fed. Cir. 2005).....38

Nautilus, Inc. v. Biosig Instruments, Inc.,
134 S. Ct. 2120 (2014).....42

O.I. Corp. v. Tekmar Co., Inc.,
115 F.3d 1576 (Fed. Cir. 1997).....27

Optimum Processing Solutions, LLC v. AMD,
No. 09-cv-1098 (N.D. Ga. July 10, 2012) 45

Ortho-McNeil Pharm. v. Mylan Labs.,
520 F.3d 1358 (Fed. Cir. 2008).....39

Phil-Insul Corp., DBA Integraspec v. Airlite Plastics Co., Formtech LLC,
2017 WL 1374696 (Fed. Cir. 2017).....9

Phillips v. AWH Corp.,
415 F.3d 1303 (Fed. Cir. 2005).....4, 21, 41, 61

ScriptPro LLC v. Innovation Associates, Inc.,
833 F.3d 1336 (Fed. Cir. 2016).....28

Amazon.com, Inc., Amazon.com Services LLC - Ex. 1016, Page 000005

Sigma-Aldrich, Inc. v. Open Biosystems, Inc.,
521 F.Supp.2d 975 (E.D. Mo. Oct. 24, 2007).....27

Smart Sys. Innovation, LLC v. Chicago Transit Authority,
2016 WL 109985 (N.D. Ill. Jan. 8, 2016).....6, 26

Sonix Tech. Co., Ltd. v. Publications Int'l, Ltd.,
844 F.3d 1370 (Fed. Cir. 2017).....16, 43

TecSec, Inc. v. Adobe Sys. Inc.,
658 Fed. App'x. 570 (Fed. Cir. 2016).....38

U.S. Surgical Corp. v. Ethicon, Inc.,
103 F.3d 1554 (Fed. Cir. 1997).....6

Ultimax Cement Mfg. Corp. v. CTS Mfg. Corp.,
587 F.3d 1339 (Fed. Cir. 2009).....43

Warner Mfg. Co. v. Armstrong,
504 F. Supp. 2d 589 (D. Minn. Mar. 30, 2007).....61

Wright Med. Tech., Inc. v. Osteonics Corp.,
122 F.3d 1440 (Fed. Cir. 1997).....28

Xerox Corp. v. 3Com Corp.,
61 Fed. App'x 680 (Fed. Cir. 2003).....61

Young v. Lumenis, Inc.,
492 F.3d 1336 (Fed. Cir. 2007).....43

Amazon.com, Inc., Amazon.com Services LLC - Ex. 1016, Page 000006

TABLE OF EXHIBITS

Exhibit No.	Description
Ex. 23	Response to Office Action, dated Aug. 7, 2009, for U.S. Patent No. 7,653,366
Ex. 24	Notice of Allowance, dated Oct. 22, 2009, for U.S. Patent No. 7,653,366
Ex. 25	Black's Law Dictionary, Eighth Edition, Definition for "viz" and "videlicet"
Ex. 26	Oxford Pocket Dictionary and Thesaurus, Definition for "viz"
Ex. 27	Merriam-Webster's Collegiate Dictionary, Eleventh Edition, Definition for "videlicet"
Ex. 28	Rebuttal Expert Report of Dr. J. Stevenson Kenney
Ex. 29	Rebuttal Expert Report of Dr. Franco Lodato
Ex. 30	Expert Rebuttal Report of Dr. Joseph McAlexander
Ex. 31	Boric-Lubecke, et al., RFIC's Challenges for Third Generation Wireless Systems

Amazon.com, Inc., Amazon.com Services LLC - Ex. 1016, Page 000007

INTRODUCTION

The opening round of briefing could not present a more stark contrast in the private parties' approach to claim construction. Nokia's arguments, in addition to being grounded in the applicable law, claim language, and the specifications, confront squarely and directly the questions presented to the Chief Administrative Law Judge. Apple's arguments do not. In some instances, Apple simply ignores facts that are inconsistent with its position, such as the embodiments that contradict its "tubular" theory in the 602 Patent. More significantly, Apple is forced to descend to misstatement and mischaracterization in pursuit of meritless positions. For example, as shown below regarding the 700 Patent, Apple claims that the specification describes features as "the present invention," hoping to import those features by implication, when in fact the text identifies them as "an embodiment of the present invention." Strong, reasonable, and persuasive arguments do not need to rely on guile or pretense.

It also bears note that there are literally dozens of pages of argument on the novelty of the claims, thinly disguised as "background." Apple, presumably aware that claim construction is not likely to provide it much of a refuge from the coming proof of infringement, clearly hopes to "prepare the ground" for obviousness arguments. Because this is not the time or place to debate the novelty of these patents, Nokia has for the most part not addressed many of the false and misleading statements contained in the "technology background" sections of Apple's brief. Nokia will address them should they resurface later in this Investigation.

Amazon.com, Inc., Amazon.com Services LLC - Ex. 1016, Page 000008

ARGUMENT

I. U.S. PATENT NO. 8,036,619

A. "multi-mode communication device" / "multi-mode device" / "multi-mode radio frequency device" (claims 18, 21, 60)

Nokia's Proposed Construction	Apple's Proposed Construction	Staff's Proposed Construction
communication device capable of operating according to multiple air interfaces (e.g., GSM, CDMA, WCDMA)	Plain meaning; no construction required Alternatively: "a [radio frequency] device that operates with multiple cellular systems"	"[communication device/device/radio frequency device] that operates with multiple cellular systems" Examples of such cellular systems include GSM, CDMA, WCDMA, TDMA, etc.

The parties appear to agree that "multi-mode" is a term of art that has a well understood meaning, but the parties disagree regarding how a person of ordinary skill in the art would interpret the term "mode" in "multi-mode." Nokia proposes that the term "mode" means "air interface," while Apple and the Staff propose that the term means "cellular system." As described in Nokia's Opening Brief, Nokia's proposal should be adopted because it is supported by the intrinsic and extrinsic record and will avoid unnecessary ambiguity during the later phases of this Investigation (Nokia Br. at 11-16).

"Multi-mode" must be construed in light of the invention of the 619 Patent, which is directed to a novel oscillator that allows adjustments to phase noise depending on the air interface being used (Ex. 6 [McAlexander Rep.] at ¶ 43). Apple agrees that "certain types of components are needed for the radio portion of the cellular phone to operate, including an oscillator circuit such as a VCO . . ." (Respondent Apple Inc.'s Opening Claim Construction Brief at 81 ("Apple Br.")). Because "radio portion of the cellular

Amazon.com, Inc., Amazon.com Services LLC - Ex. 1016, Page 000009

phone" refers to RF circuitry, Apple's statement is consistent with the 619 Patent, which states that the claimed oscillator is "for use in a local oscillator of an RF communications device that communicates over an RF channel" (619 Patent at 2:21-23).

Air interface is a term of art that is used to describe the RF portion of the system that is used to transport transmitted signals between a base station and the end-user equipment (Ex. 6 [McAlexander Rep.] at ¶ 22; Ex. 20 [Martha E. Steenstrup, *Routing in Communication Networks*] at 321; Ex. 19 [Tero Ojanpera & Ramjee Prasad, *An Overview of Air Interface Multiple Access for IMT-2000/UMTS*, IEEE Communications Magazine (Sept. 1998)]). Accordingly, a person of ordinary skill in the art would understand that multiple modes of the RF communication device would refer to multiple air interfaces (*see, e.g.*, 619 Patent at 1:13-17; Ex. 6 [McAlexander Rep.] at ¶¶ 42-43).

Apple argues that the intrinsic record does not support this construction as the term "air interface" is not used in the patent (Apple Br. at 100). Apple's argument ignores a clear connection between the terms "mode" and "air interface" in the intrinsic record. For example, statements by the examiner equate the term "mode" and "air interface" (Ex. 17 [Excerpt from Prosecution History of the 619 Patent] at NK1AP04628 (arguing that Leizerovich taught a power amplifier that is "part of a multi-mode communication device as this arrangement would facilitate communications involving more than one air interface as taught by Leizerovich . . .")). The prior art disclosed and discussed by the examiner also expressly defines a multimode mobile communication device as one that can communicate via multiple air interfaces (Ex. 16, U.S. Patent No. 6,374,092 at 1:37-50 ("Leizerovich") ("[a] *multimode* mobile communication device is one that is capable of supporting more than one type of communication service, *meaning it can establish*

Amazon.com, Inc., Amazon.com Services LLC - Ex. 1016, Page 000010

*communication over more than one type of air interfac*e"); 1:53-57 ("*By multimode* it is meant that the communication device is capable of engaging in communications *using more than one air interface scheme* . . ."); 2:56-61 ("Each different *mode* of communication *uses a different air interface*, including different modulation schemes")). Leizerovich is part of the intrinsic evidence and is highly instructive regarding the appropriate construction of "multi-mode." *Phillips v. AWH Corp.*, 415 F.3d 1303, 1317 (Fed. Cir. 2005) ("The prosecution history, which we have designated as part of the 'intrinsic evidence,' consists of the complete record of the proceedings before the PTO and *includes the prior art cited during the examination of the patent*.") (emphasis added).

In Nokia's Opening Brief, Nokia explained that Apple and the Staff's proposal that "multi-mode" means "multiple cellular systems" could lead to later disputes regarding what constitutes a "cellular system" (Nokia Br. at 15-16). That concern was legitimized in Apple's Brief, which attempts to justify its construction of "multi-mode" as a "cellular system" by providing a much more narrow definition of "multi-mode" that does not even include the phrase "cellular system." Specifically, Apple and its expert now state that "term 'multi-mode device' has a well-understood meaning in the field of RF communication devices: it refers to devices capable of operating with multiple channel access methods, such as TDMA GSM, CDMA, and WCDMA" (Apple Br. at 101; *see also id*. at 80 (arguing that "[t]he word 'mode' (as used in the terms 'single mode' and 'dual mode') refers to an 'access mode' (also known as 'channel access method'), which is the process that a cellular system requires devices to use to 'access' a

Amazon.com, Inc., Amazon.com Services LLC - Ex. 1016, Page 000011

channel on the system.”)).[1] Apple and its expert thus tie the term “mode” to a multiple channel access method and appear to define a “cellular system” by its channel access method.

Apple’s attempt to narrow the term “multi-mode” to focus on multiple channel access methods should be rejected. A person of ordinary skill would understand that a mode is not defined solely by its channel access method. For example, GSM and IS-54 both use the Time Division Multiple Access Method, but a person of ordinary skill in the art would not consider GSM and IS-54 to be the same, as their air interfaces are different (Ex. 30 [Rebuttal Expert Report of Dr. Joseph McAlexander Regarding Claim Construction] at ¶ 21 (“McAlexander Reb. Rep.”); Ex. 18 [Jerry D. Gibson. *The Mobile Communications Handbook, Second Edition* at 26-3 (CRC Press LLC 1999)] (showing the air interface characteristics of IS-54 and GSM)). For example, GSM and IS-54 have, among other things, different transmit and receive frequency bands, carrier spacing, number of radio channels, modulation schemes, and carrier bit rate (*id*.).

Apple’s attempt to define a cellular system by a single characteristic thus highlights the need for clarity in the construction of the term “multi-mode” and the danger of using the term “cellular system.” In contrast, Nokia’s construction is consistent with the intrinsic record and provides precise guidance to the parties as to how to distinguish between two modes.

---

[1] Apple’s Brief incorrectly states that “[a]ll parties appear to agree that the three disputed ‘multi-mode’ terms refer to RF communication devices that use multiple channel access methods” (Apple Br. at 101). Nokia has never agreed to such a characterization. Nokia has consistently stated that a mode is an air interface. A channel access method is only one of many characteristics of an air interface.

Amazon.com, Inc., Amazon.com Services LLC - Ex. 1016, Page 000012

Apple argues that a "proper" construction should "rest on the words that the named inventors chose to use when writing their patent." The fact that Apple has attempted to construe its own construction (i.e., construing multiple cellular systems as systems that use different channel access methods) illustrates the need to provide further clarity at this stage of the Investigation instead of having to revisit the issue during the Hearing. *Smart Sys. Innovation, LLC v. Chicago Transit Authority*, 2016 WL 109985, at *5 (N.D. Ill. Jan. 8, 2016) ("The purpose of construing claims is to help clarify the scope of the claims, not to add further confusion.") (citing *U.S. Surgical Corp. v. Ethicon, Inc.*, 103 F.3d 1554, 1568 (Fed. Cir. 1997) (explaining that the purpose of claim construction is "to clarify and when necessary to explain what the patentee covered by the claims").

Apple criticizes Nokia's use of the term "air interface" based on a prior Commission decision that did not construe "wireless communication" using "air interface protocol" (Apple Br. at 102 (citing *Certain Baseband Processor Chips & Chipsets*, Inv. No. 337-TA-543, USITC Pub. No. 4258, 2011 WL 6175074, at *69-*70 (Oct. 10, 2006)). The Commission's prior decision is not instructive as it was not construing the term "mode" or "multi-mode," and the decision rested on the finding that "neither the patent or the prosecution history uses the term 'air interface'" (*id.*). In contrast here, the prosecution history of the 619 Patent shows a direct link between the word "mode" and "air interface," and the intrinsic record provides an explicit definition of the term at issue (*see, e.g.,* Ex. 16, Leizerovich at 1:37-50 ("[a] multimode mobile communication device is one that is capable of supporting more than one type of communication service, meaning it can establish communication over more than one type of air interface"); 1:53-

Amazon.com, Inc., Amazon.com Services LLC - Ex. 1016, Page 000013

57 ("By multimode it is meant that the communication device is capable of engaging in communications using more than one air interface scheme . . .")).

In contrast to the Commission decision which does not construe the term "mode" or "mode of operation," ALJ Pender's findings in the 847 Investigation are consistent with Nokia's approach here. In that case, ALJ Pender construed the term "operation mode" in U.S. Patent No. 5,884,190 to mean "the air interface technology (e.g., GSM, LTE, CDMA, TDMA, FDMA)" (Ex. 7 [*In the Matter of Certain Electronic Devices Including Mobile Phones and Tablet computers, and Components Thereof*, ITC Investigation No. 337-TA-847, Initial Determination (Public Version)] at 66).[2] ALJ Pender also specifically rejected HTC's attempt to define an "operation mode" based on a single characteristic of the air interface, as he stated that "operation mode" is "not a specific operational frequency band within the air-interface technology" (*id*.; *see also id*. ("Thus for example, in accordance with my construction, GSM 850, GSM 900, GSM 1800, and GSM 1900 would be considered to utilize the same operation mode, GSM")).

Nokia's construction thus should be adopted because it (i) is consistent with the intrinsic record, (ii) avoids ambiguity, and (iii) is consistent with a prior ID's interpretation of similar terms.

With regard to the Staff's proposed construction, the Staff admits that "[t]he Staff does not necessarily dispute that 'air interface' may be commonly understood term to a person of ordinary skill in the art to describe GSM, CDMA, WCDMA, or TDMA systems," but the Staff indicates that Nokia must rely on extrinsic evidence. As discussed

---

[2] In the 847 Investigation, Nokia actually advocated a narrower construction that defined mode by a frequency band, but Nokia accepts ALJ Pender's well-reasoned decision construing that Patent.

Amazon.com, Inc., Amazon.com Services LLC - Ex. 1016, Page 000014

above, Nokia's construction is supported by the intrinsic record, including Leizerovich, and the extrinsic record. Further, Apple's attempts to define a cellular system by one attribute of that system confirms that using "cellular system" as part of the construction will necessary lead to disputes later in the Investigation.

B. "one of a plurality of modes" / "operational mode of [a/the] radio frequency communications device" / "mode of operation" (claims 1, 7, 18, 46, 60, 79)

Term	Nokia's Proposed Construction	Apple's Proposed Construction	Staff's Proposed Construction
one of a plurality of modes	one of at least two air interfaces (e.g., GSM, CDMA, WCDMA)	Plain meaning; no construction required Alternatively: "one of a plurality of ways of operating"	"one of at least two cellular systems" Examples of such cellular systems include GSM, CDMA, WCDMA, TDMA, etc.
operational mode of [a/the] radio frequency communications device	air interface of [a/the] radio frequency communications device (e.g., GSM, CDMA, WCDMA)	Plain meaning; no construction required Alternatively: "a way in which the radio frequency communications device operates"	"cellular system of [a/the] radio frequency communications device" Examples of such cellular systems include GSM, CDMA, WCDMA, TDMA, etc.
mode of operation	air interface (e.g., GSM, CDMA, WCDMA)	Plain meaning; no construction required Alternatively: "a way of operating"	"cellular system" Examples of such cellular systems include GSM, CDMA, WCDMA, TDMA, etc.

The Staff and Nokia agree that the term "mode" in the phrases above ("mode of operation," "operational mode of [a/the] radio frequency communications device," and

Amazon.com, Inc., Amazon.com Services LLC - Ex. 1016, Page 000015

"one of a plurality of modes") should have the same meaning as it does in the phrase "multi-mode" because each of the "mode[s] of operation" are one of the multi-modes. Accordingly, the Chief ALJ's decision regarding the appropriate construction of "multi-mode" should also apply here and should be in favor of Nokia's proposed construction.

Apple, however, argues that the terms "mode of operation," "operational mode of [a/the] radio frequency communications device," and "one of a plurality of modes" should be construed much more broadly and encompass any way of operating. Apple therefore offers inconsistent constructions for the same term in the same claims and same patent. The Federal Circuit cautioned against such an approach. *Phil-Insul Corp., DBA Integraspec v. Airlite Plastics Co., Formtech LLC*, 2017 WL 1374696, at *12 (Fed. Cir. 2017) ("It is well-established, however, that claim terms are to be construed consistently throughout a patent").

Moreover, Apple's attempt to separate the operational mode from "multi-mode" is contrary to the intrinsic record. For example, claims 18 and 60 specifically link the "mode of operation" to the "multi-mode communication device" (Ex. 6 [McAlexander Rep. at ¶¶ 58-61]; 619 Patent at Cls. 18, 60; *see also* 619 Patent at 1:13-18 ("These teachings relate generally to frequency sources and oscillators, and more specifically relate to voltage controlled oscillators used in mobile communication devices, *in particular multi-mode mobile communication devices such as dual mode cellular telephones* . . .") (emphasis added)). Accordingly, the "operational mode" or "one of a plurality of modes" terms should be construed to be one mode of the multi-mode device as provided by Nokia's proposed construction. Because "multi-mode" refers to multiple air interfaces, a single mode of operation is an air interface.

Amazon.com, Inc., Amazon.com Services LLC - Ex. 1016, Page 000016

Apple critiques Nokia's construction by pointing to references in the specification of a "conversation mode or state," "receive/idle mode," and "sleep stage or mode," and "lower power consumption mode" (Apple Br. at 98-99). Apple's citations are misplaced, however, as these modes or states are usage conditions that are expressly distinguished in the 619 Patent from a mode of operation (619 Patent at 1:34-40 ("In different cellular systems *different operational requirements* are present, and the opportunities to reduce the power consumption thus differ as well. Also, *different usage conditions* and wireless network environments place different demands on the required quality of the VCO signal"); Ex. 30 [McAlexander Reb. Rep.] at ¶ 27). For example, the 619 Patent states that "in the WCDMA *mode of operation* the continuous current consumption of the receiver is important because, for example in the *talk mode or conversation state*, the receiver is on almost continuously" (619 Patent at 7:10-13; Ex. 30 [McAlexander Reb. Rep.] at ¶ 28). Thus, contrary to Apple's assertions, the WCDMA mode of operation includes a talk and conversation states or usage conditions, and the talk and conversation states are not modes of operation (Ex. 30 [McAlexander Reb. Rep.] at ¶¶ 28-29).[3] Thus, "conversation mode or state," "receive/idle mode," and "sleep stage or mode," and "lower power consumption mode" refer to usage conditions of a device and not a mode of operation (*id.*).

Apple's remaining citations are misleading as the citations relate to the embodiment for adjusting voltages based on RF channel conditions, *not the operational*

---

[3] The patent also describes that the conversation mode or state and the idle mode were factors in the prior art determination of when the VCO is powered on or powered off (619 Patent at 2:6-12). This section again just describes the usage condition of the phone, and it does not relate to the operational mode that is used to adjust the variable supply and bias voltages.

Amazon.com, Inc., Amazon.com Services LLC - Ex. 1016, Page 000017

mode. The 619 Patent describes two embodiments for varying a supply or bias voltage: (i) one is based on an operational mode and (ii) the other is based on RF channel conditions (*see, e.g.*, 619 Patent at 2:20-34; Ex. 30 [McAlexander Reb. Rep.] at ¶ 31). The claims specifically distinguish these two embodiments (*see, e.g.*, Cl. 1 ("as a function of at least one of radio frequency channel conditions *or* an operational mode of the radio frequency communications device") (emphasis added); Cl. 7 ("as a function of at least one of radio frequency channel conditions *or* an operational mode of the radio frequency communications device") (emphasis added)). The citations of the "receive/idle mode," and "sleep stage or mode," and "lower power consumption mode" cited by Apple do not relate to the operational mode embodiment. Instead, the citations relate solely to the embodiment for varying voltages based on RF channel conditions (*see* 619 Patent at 6:51-54 ("It has been known to calculate the SNR using DSP 116A software for enabling the sleep stage or mode of the MS receiver. However, the SNR information is available as well in the idle mode and in the conversation mode."); *see also id*. at 6:27-31; Ex. 30 [McAlexander Reb. Rep.] at ¶ 32). Thus, the 619 Patent does not describe varying the supply or bias voltage in response to any of these modes or states.

In contrast to the usage conditions, when the 619 Patent refers to the operational mode or mode of operation, it says so explicitly (Ex. 30 [McAlexander Reb. Rep.] ¶ 33; *see, e.g.*, 619 Patent at 7:1-3 ("The employed metrics may also change as the *operational mode* is changed (e.g., from a TDMA mode to a CDMA mode and vice versa)."), 7:21-24 ("However, the WCDMA may be only one mode out of two or more in the MS 100, so that the problems introduced by its operation may disappear when *operating in another mode*, such as the TDMA GSM mode, or in a multi-media mode. The teachings of this

Amazon.com, Inc., Amazon.com Services LLC - Ex. 1016, Page 000018

invention enable one to better optimize the performance of MS 100 for different modes and conditions, and to optimize the power consumption to the *current mode of operation*"), 7:10-13 ("As was mentioned, in the WCDMA *mode of operation* the continuous current consumption of the receiver is important because, for example in the talk mode or conversation state, the receiver is on almost continuously.")).

One of the operational modes explicitly called out by the 619 Patent is the "multi-media mode" (619 Patent at 7:21-24). Apple argues that "[a] person of ordinary skill in the art would understand the operational mode required by these claims is a mode involving more than one type of media (e.g., text, audio, graphics, animation, and full-motion video)—which has nothing to do with the specific cellular standard or air interface used" (Apple Br. at 97). Although Nokia agrees that the multi-media mode is a mode that involves different types of data or media, Nokia disagrees with Apple's statement that this has nothing to do with the specific cellular standard air interface used. To the contrary, a multimedia mode is one in which the air interface supports the transmission of multimedia content (Ex. 30 [McAlexander Reb. Rep.] at ¶¶ 34-35).

Apple conveniently disregards that the multi-media mode relates to transmission and reception of different types of data or media because it is precisely the air interface that enables this multimedia communication (*id.*). For example, Advanced Mobile Phone System (AMPS) was one of the first wireless standards, and its air interface only allowed voice transmissions (*id.* at ¶ 36). Accordingly, AMPS could not be used for multi-media communications and was not a multi-media mode (*id.*).

Similarly, the TDMA GSM mode described in the 619 Patent was not capable of multimedia transmissions. The ability to handle multimedia transmissions was only

Amazon.com, Inc., Amazon.com Services LLC - Ex. 1016, Page 000019

added to TDMA GSM when it was enhanced to include the General Packet Radio Service (GPRS) functionality, which was capable of packet-switched data transmissions (*id.* at ¶ 37). These packet-switched data transmissions were necessary for multimedia communications (*id.* (describing that, for example, Multimedia Messaging Service (MMS) was not available prior to GPRS)). Thus, multi-media mode refers to an air interface that allows multimedia communications (*id.* at ¶ 38).

The Staff appears to agree with Nokia that Apple's proposal for these terms is too broad as the Staff explains that, "throughout the specification, the drafters repeatedly and consistently associated 'operational mode' and 'mode of operation' with cellular systems . . ." (Commission Investigative Staff's Initial *Markman* Brief at 42 ("Staff Br.")). Although the Staff proposes to use the term "cellular system" instead of "air interface," Nokia and the Staff agree that Apple's proposal is contrary to the intrinsic record.

In sum, Apple's attempts to broaden the scope of the claims is inconsistent with the intrinsic record, and thus Nokia's proposed construction should be adopted to clarify the meaning of "modes."

C. "a value of Vcc is set so as to minimize power consumption as a function of an amount of allowable local oscillator phase noise" (claim 1)

Nokia and the Staff's Proposed Construction	Apple's Proposed Construction
"a value of Vcc is set at or near the minimum required level according to an amount of allowable local oscillator phase noise"	Indefinite

Apple argues that the phrase "allowable local oscillator phase noise" is indefinite as the term "allowable" is inherently subjective (Apple Br. at 103). Apple's argument is

Amazon.com, Inc., Amazon.com Services LLC - Ex. 1016, Page 000020

without merit because one of ordinary skill would understand that allowable phase noise refers to the maximum phase noise that the air interface can tolerate (Ex. 30 [McAlexander Reb. Rep.] at ¶ 41). A person of ordinary skill in the art thus would understand that the amount of "allowable" phase noise is a particular value based on the constraints or characteristics of the air interface (*id.*).

To understand allowable phase noise, the relationship between the value of Vcc and phase noise is critical. Apple does not dispute that there is a functional relationship between power consumption and the value of Vcc. The parties agree that power consumption is reduced when the value of a supply voltage such as Vcc is reduced (Nokia Br. at 18; Staff Br. at 36; Apple Br. at 88-90). In addition, Apple does not dispute that there is an inverse relationship between power consumption and phase noise (Apple Br. at 88-90; Ex. 30 [McAlexander Reb. Rep.] at ¶ 42). Accordingly, Apple also agrees that increasing the power consumption by increasing the value of Vcc reduces phase noise in the oscillator signal (Apple Br. at 87).

With this background, a person of ordinary skill in the art would understand that "a value of Vcc is set so as to minimize power consumption as a function of an amount of allowable local oscillator phase noise" refers to setting the value of Vcc at or near the minimum level based on the allowable phase noise, i.e. the maximum amount of phase noise that the air interface can tolerate (Ex. 30 [McAlexander Reb. Rep.] at ¶ 43).

Apple attempts to justify its indefiniteness argument by contending that what constitutes an amount of "allowable" phase noise can vary, for example, among three hypothetical engineers designing a cellular device (Apple Br. at 103). Apple conflates the term "allowable" with what is "desired" by each engineer. Indeed, before assessing what

Amazon.com, Inc., Amazon.com Services LLC - Ex. 1016, Page 000021

the desired phase noise would be, each of Apple's three hypothetical engineers would understand the maximum amount of phase noise that the oscillator can exhibit while still functioning properly and avoiding the pitfalls of reciprocal mixing (Ex. 30 [McAlexander Reb. Rep.] at ¶ 45). At the time of the 619 Patent, specific phase noise requirements for different air interfaces were known by those of skill in the art, and, for example, the phase noise requirements for GSM and WCDMA are different (619 Patent at 5:59-64; Ex. 30 [McAlexander Reb. Rep.] at ¶¶ 47-49). For example, below is a table of phase noise requirements for GSM:

Figure 1 – GSM Phase Noise Requirements

Table IV. VCO phase noise requirement [dBc/Hz]

Offset [kHz]	GSM900 Small MS	DCS1800 MS	GSM900 Micro BTS	DCS1800 Micro BTS	GSM900 Normal BTS	DCS1800 Normal BTS
600	-118	-116	-130	-121	-137	-128
800	-118	-116	-140	-131	-147	-138
1600	-128	-126	-140	-131	-147	-138
3000	-133	-133	-140	-131	-150	-138

(Ex. 31 [RFIC's Challenges for Third Generation Wireless Systems] at 5.)

The phase noise requirements for WCDMA were also known (*see id*. at 6; Ex. 30 [McAlexander Reb. Rep.] at ¶50).

A person of ordinary skill in the art would thus understand how to calculate the maximum amount of phase noise based on the known set of constraints for an air interface or mode of operation. The maximum amount of phase noise that the oscillator can exhibit is the "allowable" phase noise. This is consistent with the disclosure in the 619 Patent that a person of ordinary skill in the art could optimize prior art VCOs for one mode (619 Patent at 1:41-44).

Although Apple attempts to cast doubt on the validity of the patent using a hypothetical engineer, each engineer would understand what the allowable phase noise is

and would understand that the oscillator could then be further tailored in their specific device to produce less phase noise than the amount that is "allowable." Simply because an engineer can achieve different amounts of phase noise (i.e., what the engineer desires) does not change what is meant by an "allowable" amount of phase noise (Ex. 30 [McAlexander Reb. Rep.] at ¶ 52).

Thus, Apple's argument that an "allowable" amount of phase noise is subjective holds no weight, especially given that phase noise requirements were understood by a person of ordinary skill in the art and published around the time of the 619 Patent. *See 3form, Inc. v. Lumicor, Inc.*, 2017 WL 443652 at *4 (Fed. Cir. 2017) (stating that "a patentee need not define his invention with mathematical precision in order to comply with the definiteness requirement" and finding that "substantially natural appearing conformation" was not indefinite); *DDR Holdings LLC v. Hotels.com, L.P.*, 773 F.3d 1245, 1260 (Fed. Cir. 2014) (holding that a term is not indefinite if it has "an established, sufficiently objective meaning in the art."). Accordingly, one of ordinary skill in the art would be able to identify an amount of "allowable" phase noise commensurate with the current operating mode.

Separate from the issue of indefiniteness, Apple takes issue with Nokia and the Staff's construction requiring that Vcc be set "at or near the minimum required level" (Apple Br. at 106-107). Apple attempts to restrict the value of Vcc to the "smallest possible amount" (Apple Br. at 106). Courts, however, have routinely held that absolute or mathematical precision is not required by claim limitations, and here the intrinsic evidence supports that the claim limitation is not so restrictive. *See Sonix Tech. Co., Ltd. v. Publications Int'l, Ltd.*, 844 F.3d 1370, 1377 (Fed. Cir. 2017). As Nokia and the Staff

Amazon.com, Inc., Amazon.com Services LLC - Ex. 1016, Page 000023

point out, the 619 Patent specification explains that "[i]t is desired to operate so that the VCO level is at or near the minimum required level so that the power consumption can be minimized" (Nokia Br. at 19; Staff Br. at 36; 619 Patent at 5:67-6:3). Since the "allowable" level of phase noise is a known value in a certain operational mode, one of ordinary skill would set Vcc to a value that would minimize power consumption at or near the minimum required level required to satisfy the phase noise requirements of a particular mode.

D. "the values of Vcc and Vbias are set so as to minimize power consumption as a function of an amount of allowable local oscillator phase noise" (claim 7)

Nokia and the Staff's Proposed Construction	Apple's Proposed Construction
"the values of Vcc and Vbias are set at or near the minimum required level according to an amount of allowable local oscillator phase noise"	Indefinite

The only difference between this term and the one above is the requirement that the values of both Vcc and Vbias are set, and Apple's arguments focus on other parts of the phrase. Thus, for the same reasons discussed above, a person of ordinary skill would understand that an amount of "allowable" phase noise is known for a specific cellular system, and thus the claim term is not indefinite.

Amazon.com, Inc., Amazon.com Services LLC - Ex. 1016, Page 000024

E. "said variable supply voltage having a magnitude that is controlled to operate said voltage controlled oscillator with a current consumption that is established as a function of a voltage controlled oscillator output signal quality needed for operation in one of a plurality of modes by adjusting the phase noise of the voltage controlled oscillator" (claim 46)

Nokia and the Staff's Proposed Construction	Apple's Proposed Construction
Construction of this term is unnecessary. If construction is required, however, this term should be construed consistent with its plain and ordinary meaning, which is the claim language itself. Alternatively: "said variable supply voltage having a value that is controlled to operate said voltage controlled oscillator with a current consumption that is established according to a voltage controlled oscillator output signal quality needed for operation in one of a plurality of modes (as that term is construed above) by adjusting the phase noise of the voltage controlled oscillator"	Indefinite

Apple argues that the proposed phrase is indefinite because it is unclear (1) what is accomplished "by adjusting the phase noise," and (2) what is required for the "output signal quality needed for operation" (Apple Br. at 108). Apple's arguments are misplaced, as its own description of the background technology reveals that a person of ordinary skill in the art would understand the portion of claim 46 identified by Apple.

First, the claim requires "said variable supply voltage having a magnitude that is controlled . . . by adjusting the phase noise of the voltage controlled oscillator." Apple readily admits that a person of ordinary skill in the art would understand that phase noise is reduced by increasing the power supplied to the voltage controlled oscillator (Apple Br. at 87, 89 ("It was also well known before the '619 patent that increasing the power consumption of the VCO reduced the phase noise present in the oscillator signal")).

Amazon.com, Inc., Amazon.com Services LLC - Ex. 1016, Page 000025

Further, the specification of the 619 Patent teaches that "the MS 100 is enabled to adjust or tune the phase noise of the VCO according to the mode of operation of the transceiver, and to thus control the amount of current consumption as a function of the required VCO signal quality" (Staff Br. at 40; 619 Patent at 6:35-39). When the amount of phase noise is adjusted, the magnitude of the variable supply voltage increases and decreases accordingly (Apple Br. at 90; 619 Patent at 6:27-31). Thus, there is a relationship between the supply voltage and the amount of phase noise in the oscillator signal (Ex. 30 [McAlexander Reb. Rep.] at ¶¶ 60-61). Thus, adjusting the phase noise means that the supply voltage is also adjusted (*id.*). Accordingly, contrary to Apple's arguments, a person of ordinary skill in the art would understand from a plain reading of the limitation that "by adjusting the phase noise of the voltage controlled oscillator," the magnitude of the "variable supply voltage" increases or decreases (*id.*).

Second with regard to the limitation "output signal quality needed for operation in one of the plurality of modes," Apple argues that this limitation is indefinite because there is no objective standard in assessing the level of output signal quality that is "needed." However, the specification explains that "[t]he quality of the VCO, for example the phase noise, signal to noise floor, output power and environmental stability that is required by the RF system strongly influences the current consumption" (Nokia Br. at 24; Apple Br. at 110; 619 Patent at 1:26-29). One of ordinary skill in the art would understand that each RF system requires a certain output signal quality (Ex. 30 [McAlexander Reb. Rep.] at ¶ 64). The 619 Patent discloses that signal quality includes phase noise, signal to noise floor, output power, and environmental stability (619 Patent at 1:26-30). A person of ordinary skill in the art would understand the requirements of

Amazon.com, Inc., Amazon.com Services LLC - Ex. 1016, Page 000026

these metrics for specific operational modes because an oscillator and RF circuitry could not perform its intended function (i.e., it would not work) if the engineer did not know and adhere to these requirements (Ex. 6 [McAlexander Rep.] at ¶¶ 80-81; Ex. 30 [McAlexander Reb. Rep.] at ¶ 64). Thus, the output signal quality needed is objectively known and can be discerned by one of ordinary skill in the art.

As an example, the 619 Patent explicitly discloses the typical magnitude of a supply voltage that will result in an output signal quality sufficient for the GSM and WCDMA embodiments:

> Typical Vcc voltages that may be employed are in the range of about 2.7 to 1.8 volts, and the value of Vbias depends on the value of Vcc. For the case where narrowband and wideband modes are used examples include, but are not limited to, a GSM/WCDMA embodiment wherein the GSM channel spacing is 200kHz and the WCDMA channel spacing is 5 Mhz.

(619 Patent at 7:35-41.) This teaching is more than sufficient for a person of ordinary skill in the art to understand the meaning of the claim.

II. U.S. PATENT NO. 6,480,700

A. "said second amplifier become self-biased" / "the second amplifier becomes self-biased" (claims 1, 16)

Nokia and the Staff's Proposed Construction	Apple's Proposed Construction
"[said/the] second amplifier element generates essentially the same output power levels independent of the value of an applied bias current signal"	"the input power of the transmit signal applied to the second amplifier and the construction of the second amplifier sets the quiescent operating point of the second amplifier"

Nokia and the Staff agree that the construction that most naturally aligns with the patent's description of the invention is the express definition that is provided in column 8, lines 15-17, of the patent (Staff Br. at 9-12). Apple instead chooses to rely on language elsewhere in the specification, which does not appropriately describe the claim terms at

Amazon.com, Inc., Amazon.com Services LLC - Ex. 1016, Page 000027

issue. Nokia and the Staff Agree that Apple's construction only invites the need for further construction of its construction and additional disputes (*id*.).

In an attempt to prop up its construction, Apple puts great emphasis on the fact that the passages it relies on from the specification use the phrase "*that is to say*." In fact, when contrasting Nokia's and the Staff's construction with its own, Apple contends that its construction is necessarily the correct one because: "Through their use of the phrase '[T]he power amplifier 58 *becomes self-biased. That is to say*…,' the inventors indicated their intent to define the term 'self-biased' with the language that follows" (Apple Br. at 47 (emphasis in original)).

The expression "that is to say," however, cannot help Apple here. This is because the passage on which Nokia and the Staff rely (700 Patent at 8:15-17) begins with the expression "viz.," which also means "*that is to say*."[4] Thus, if we accept Apple's logic that the expression "that is to say" is definitional, then the language that follows below, which forms the basis for Nokia's and the Staff's construction, is likewise definitional:

> The resultant plot 126 indicates that the amplifier *becomes self-biased, [that is to say]*, *generates essentially the same output power levels independent of the value of the biasing current*.

(*Id*. at 8:15-17.) Nokia and the Staff agree that this passage expressly defines self-biased in a way that most naturally aligns with the patent's description of the invention, as noted above. *See Phillips*, 415 F.3d at 1316.

By contrast, Apple's construction only invites the need for further construction of its construction and additional disputes. Specifically, Apple's proposed construction

---

[4] The term "viz." is short for the Latin term "videlicet" which literally means "that is to say" (Ex. 26 [Oxford Dictionary] at 902 ("viz.…that is to say"); Ex. 27 [Merriam-Webster's Collegiate Dictionary] at 1394 ("videlicet …that is to say"); Ex. 25 [Black's Law Dictionary] at 1604 ("viz.…that is to say")).

would require the ALJ to resolve the meaning of "sets the quiescent operating point." Apple was specifically asked to state what it intends this term to mean during the parties' April 10, 2017 meet and confer process but expressly declined to do so. Apple now seeks to rely on extrinsic evidence from its expert, Dr. Choi, to advance a theory of what "quiescent operating point" means. Nokia's expert, Dr. Kenney, does not agree that these characterizations are consistent with the way in which this term is used in the 700 Patent (Ex. 28 [Expert Rebuttal Report of Dr. J. Stevenson Kenney Regarding Claim Construction] at ¶¶ 17-19 ("Kenney Reb. Rep.")). Putting aside for the moment who is correct here, this debate only illustrates why Nokia's and the Staff's construction should be adopted.

Apple also appears to be attempting to add even more limitations to its construction through its expert's explanation of the phrase "the construction of the second amplifier" (*id*. at 43 n.8 ("[t]he phrase "the construction of the power amplifier" in this statement refers to, at least, the matching networks, the transistor(s) within the amplifier, the biasing circuits, and potentially other components" (citing Choi Rep. at ¶ 81 n.4.)). This claim by Apple's expert is also incorrect (Ex. 28 [Kenney Reb. Rep.] at ¶ 20), but what is clear is that Apple's proposed construction is purposely obtuse to allow Apple to inject limitation after limitation by further construing its own construction. Such gymnastics are neither appropriate nor necessary in this instance because the specification provides a clear definition that requires no further construction.

1. Apple's construction is not supported by the specification.

Apple suggests that its proposed "quiescent operating point" construction comports with the 700 Patent because it somehow *requires* that the bias current applied to

Amazon.com, Inc., Amazon.com Services LLC - Ex. 1016, Page 000029

the power amplifier be turned off, or not used in any way, when the power amplifier is self-biased in a large signal mode (*see, e.g.*, Apple Br. at 43 ("According to the '700 patent, this approach can reduce power consumption and extend battery life—by allowing power amplifier 58, when self-biased in large signal mode, *to avoid having to use bias supplied by bias current source* 64"); *id*. at 48 ("Having the second power amplifier set its quiescent operating point by using the input power signal (and the amplifier's own circuitry)—*rather than by using bias supplied from an external bias source*—is the precise way in which the patent claims to reduce the overall amount of power consumed by that amplifier") (emphasis added)). But that is simply false.

The 700 Patent teaches that, in certain exemplary embodiments, reduction of the bias current in large-signal mode is *permissible*, but not *required*. The patent explains that this reduction of the bias current may be possible in certain situations because when self-biased, the power amplifier "generates essentially the same output power levels independent of the value of the biasing current" (700 Patent at 8:15-17). Nothing in the patent, however, precludes a bias current from being applied to the power amplifier when it is self-biased in a large signal mode, as Apple suggests. In fact, the 700 Patent makes clear that a bias current can and often will be applied to the power amplifier at all power levels, including when the power amplifier is self-biased in a large-signal mode. For example, the patent expressly states:

> As a result, the current consumed to operate the power amplifier is dependent upon the power level of the input signal applied to the power amplifier *as well as by the level of the biasing current applied to the amplifier*. The biasing current thereby forms a control current, which can be reduce [sic] through the entire power control range, *or, alternately, set to a selected level*.

Amazon.com, Inc., Amazon.com Services LLC - Ex. 1016, Page 000030

(*Id*. at 7:8-14 (emphasis added.)) The patent therefore makes clear that the bias current applied to the power amplifier can be reduced *or set to a selected level* through the entire power control range. The 700 Patent also expressly states:

> At a high power level, the amplifier 42, the RF mixer 44, the power amplifier driver 48, *and the power amplifier 58 are all biased to achieve maximum linearity*. As the output power level is reduced, the gain of the amplifier 42 and RF mixer 44 are also reduced. *At the same time, the bias current applied to the power amplifier 58 by way of the line 66 is also reduced, as the output power level is falling*, while the gain of the amplifier 58 remains fixed. Eventually, the power amplifier 58 falls out of the large-signal, self-biased mode, and the gain of the amplifier 58 becomes dependent upon the level of the biasing current applied thereto.

(*Id*. at 7:45-56 (emphasis added.)) Thus, nothing in the patent precludes a bias current from being applied to the power amplifier when it is self-biased in a large signal mode. As the passages above demonstrate, the patent expressly contemplates that a bias current can and often will be applied to the power amplifier at all power levels, including higher power levels when the power amplifier is in a large-signal mode (Ex. 28 [Kenney Reb. Rep.] at ¶ 21).

2. Apple's misleading statements about the specification show how far it must go to support its theories.

Apple attempts to support its "no bias" theory by pointing to examples in the specification that Apple characterizes as describing "the present invention" (Apple Br. at 48). Apple's arguments are misleading for at least two reasons: (1) each of the passages Apple relies on expressly notes that it is describing *an embodiment* of the invention, and not characterizing the "present invention" as a whole; and (2) each of the passages Apple relies on relates to an aspect of the patent (e.g., amplifier 82 in Fig. 1) that is not at issue in *any* of the asserted claims because it is on the *receive* side of the device, and not the *transmit* side where the claimed power amplifier arrangement is found.

Amazon.com, Inc., Amazon.com Services LLC - Ex. 1016, Page 000031

That the statements on which Apple relies are not describing "the present invention" as a whole, nor the claimed transmit amplifier, is apparent from the passages themselves:

> Operation of *an embodiment* of the present invention determines characteristics of the *receive* signal received at the mobile station. Determine characteristics of the receive signal are utilized to select whether to bias the *amplifier* 82 with a biasing current…

(700 Patent at 8:26-35 (emphasis added.))

> FIG. 5 illustrates a method flow diagram, shown generally at 142, illustrating operation of such *an embodiment* of the present invention.… A determination is made, as indicated by the decision block 154, as whether or not to bias the *amplifier* 82.

(*Id*. at 8:36-50 (emphasis added.))

> In *one implementation*, the *receive portion* of the communication device includes a Low Noise Amplifier (LNA)… And, the biasing current is not applied to the low noise amplifier.

(*Id*. at 3:52-60 (emphasis added.))

As the passages above make clear, each of them is talking about *an embodiment* of the invention, and each of them is referring to an amplifier (e.g., amplifier 82 in Fig. 1) that is on the *receive* side and that is not at issue in *any* of the asserted claims. Apple's reliance on these passages is thus wholly misplaced.

3. Apple's remaining arguments are without merit.

As discussed above, Nokia and the Staff rely on the express definition of "self-biased" that is provided in column 8 of the patent for their agreed upon construction. Apple contends that this express definition cannot be the correct construction because, according to Apple, "it describes the result of self-biasing, and not how the amplifier 'becomes self-biased'" (Apple Br. at 49). This argument is without merit. As the Staff explains in its opening brief, the term "becomes self-biased" is referring to an operating

Amazon.com, Inc., Amazon.com Services LLC - Ex. 1016, Page 000032

condition of the amplifier, and not a way (or how) to possibly achieve the self-biased condition, as Apple suggests. As aptly stated by the Staff, "Apple's construction describes the means to achieve the result, rather than more appropriately describing the resulting condition itself as [Nokia's and] Staff's construction does" (Staff Br. at 13; *see also* Ex. 28 [Kenney Reb. Rep.] at ¶ 21).

In evident recognition of the lack of merit of its position, Apple proposes in a footnote to combine the two constructions (Apple Br. at 49 n.11). Of course, combining the constructions does not solve the problems with Apple's construction, but simply adds yet another set of requirements for the claim, unwarranted by the claims or the specification. *Smart Sys. Innovation*, 2016 WL 109985, at *5 ("The purpose of construing claims is to help clarify the scope of the claims, not to add further confusion.").

B. "large signal mode" (claims 1, 16)

Nokia and the Staff's Proposed Construction	Apple's Proposed Construction
Construction of this term is unnecessary. If construction is required, however, this term should be construed consistent with the definition provided in the claim language itself. Alternatively: "mode in which the amplifier element is self-biased at a fixed gain level."	"mode in which the bias current does not control the gain of the second amplifier element"

Apple's construction ignores the express relationship stated in the claims between "large signal mode" and "self-biased." "Large signal mode" is defined in the claims as self-biased at a fixed gain level. Apple contends that Nokia's and the Staff's construction cannot be correct because it would render the last element of claim 1 superfluous. But

Amazon.com, Inc., Amazon.com Services LLC - Ex. 1016, Page 000033

Apple's argument only underscores Nokia's and the Staff's point that construction is unnecessary because this term is already expressly defined by the claim itself.

Apple's misplaced reliance on *Aristocrat Techs. Australia Pty Ltd. v. Int'l Game Tech.*, 709 F.3d 1348 (Fed. Cir. 2013) and *Digital-Vending Servs. Int'l, LLC v. Univ. of Phoenix, Inc.*, 672 F.3d 1270 (Fed. Cir. 2012) is unavailing because, unlike here, neither of these cases dealt with a term that was defined by the claim. Apple's contention that *CAE Screenplates, Inc. v. Heinrich Fiedler GmbH & Co. KG*, 224 F.3d 1308 (Fed. Cir. 2000) and *Innova/ Pure Water, Inc. v. Safari Water Filtration Sys., Inc.*, 381 F.3d 1111 (Fed. Cir. 2004) stand for the proposition that large-signal mode must be construed "separately" from its express definition in the claim is similarly misplaced, as once again, neither of these cases dealt with a term that was expressly defined by the claim. When the construction of a claim is clear, as it is here, courts have routinely held that the presumption of separate treatment is overcome. *See, e.g., O.I. Corp. v. Tekmar Co., Inc.*, 115 F.3d 1576 (Fed. Cir. 1997) ("Although the doctrine of claim differentiation may at times be controlling…*the doctrine cannot alter a definition that is otherwise clear from the claim language*, description, and prosecution history.") (emphasis added); *Sigma-Aldrich, Inc. v. Open Biosystems, Inc.*, 521 F.Supp.2d 975, 994 (E.D. Mo. Oct. 24, 2007) (noting it would be "improper" to adopt a construction inconsistent with the intrinsic record "merely to avoid some overlap with the claim language").

Apple's final argument, to the extent it can be understood, appears to be based on its debunked "no bias" theory that was discussed above (*supra* Part A.2l; *see also* Ex. 28 [Kenney Reb. Rep.] at ¶ 22). Apple's construction should therefore be rejected in favor of Nokia and the Staff's, which relies on the express language of the claims themselves.

Amazon.com, Inc., Amazon.com Services LLC - Ex. 1016, Page 000034

C. "small signal mode" / "small-signal mode" (claims 1, 2-4, 16)

Nokia's Proposed Construction	Apple's Proposed Construction	Staff's Proposed Construction
"mode in which the gain of the second amplifier element is responsive to an applied bias current signal"	"mode in which the bias current controls the gain of the second amplifier element"	"mode in which the bias current controls the gain of the second amplifier element"

Apple claims in its opening brief that Nokia's proposed construction is incorrect because "the patent never states that the gain is merely 'responsive' to an applied bias current when in small signal mode" (Apple Br. at 51). That is simply false. As Nokia explained in its opening brief, dependent claim 3, which was an originally filed claim, expressly states that when the "second amplifier element is…operated in the *small-signal mode*, said second amplifier element amplifies the first amplified radio frequency signal *at a gain level responsive to levels of the second-bias current signal*" (700 Patent at Cl. 3 (emphasis added)). *ScriptPro LLC v. Innovation Associates, Inc.*, 833 F.3d 1336, 1341 (Fed. Cir. 2016) (noting that "[o]riginal claims are part of the specification") (internal citation omitted); *CytoLogix Corp. v. Ventana Med. Sys., Inc.*, 424 F.3d 1168, 1173 (Fed. Cir. 2005) (rejecting a proposed construction that would render dependent claim meaningless); *Wright Med. Tech., Inc. v. Osteonics Corp.*, 122 F.3d 1440, 1445 (Fed. Cir. 1997) ("We must not interpret an independent claim in a way that is inconsistent with a claim which depends from it.").

While it may seem from the above chart that it is Nokia's proposed construction that is different from what Apple and the Staff have proposed, it is actually *Apple* that is approaching this claim term in a very different manner, all under the guise of allegedly "agreeing" with the Staff. For example, in its opening brief, the Staff notes: "The specification repeatedly discloses that the distinguishing characteristic between these two

Amazon.com, Inc., Amazon.com Services LLC - Ex. 1016, Page 000035

modes is whether *the gain of the amplifier is dependent upon or tied to the level of the biasing current applied thereto, i.e., whether the biasing current applied to the power amplifier controls the gain of the power amplifier*" (Staff Br. at 10) (emphasis added)). The Staff thus recognizes that, in the context of the 700 Patent, the term "*controls*" (or controlled) is used broadly to mean "responsive to" or "dependent upon" or "tied to," as Nokia explained in its opening brief (Nokia Br. at 36).

Apple, on the other hand, does not explain what it means by "controls" and, if anything, appears to be trying to import into the claims an overly restrictive meaning of this term, which is not consistent with its use in the specification of the 700 Patent. As explained in Nokia's opening brief, during the parties' April 10, 2017 meet and confer, Apple represented that it intended to interpret the word "control" consistent with the way it is used in the specification. It is clear that Apple is not holding true to that promise. This is exactly why Apple's construction cannot be adopted without making clear that, in the context of the 700 Patent, the term "controls" means "responsive to" or "dependent upon" or "tied to," as explained by Nokia and the Staff (*see also* Ex. 28 [Kenney Reb. Rep.] at ¶¶ 23-24).

Amazon.com, Inc., Amazon.com Services LLC - Ex. 1016, Page 000036

D. "indications of the first amplified radio frequency signal" (claims 1, 2, 16)

Nokia's Proposed Construction	Apple's Proposed Construction	Staff's Proposed Construction
Plain and ordinary meaning Alternatively: "the first amplified radio frequency signal as subjected to further signal processing"	Indefinite	"the first amplified radio frequency signal as subjected to further signal processing" For example, such further signal processing may include filtering, as disclosed in the specification.

Apple contends that there is nothing in the 700 Patent that would allow an ordinary skilled artisan to understand the meaning of the term "indications of the first amplified radio frequency signal." Apple is wrong. First, the claims make clear that the term "*indications of the first amplified radio frequency signal*" refers to what is *received* at, and *applied* to, "the second amplifier element," as expressly stated in Claim 1, the relevant portion of which is reproduced below:

> *a second amplifier element coupled to receive indications of the first amplified radio frequency signal generated by said first amplifier element*, said second amplifier element selectably operable in a large-signal mode and in a small signal mode, said second amplifier operated in the large-signal mode when *the indications of the first amplified radio frequency signal applied thereto* is at least as great as a threshold value such that, when operated in the large-signal mode, said second amplifier become self-biased at a fixed gain level.

(700 Patent at Cl. 1 (emphasis added.)) The claims themselves therefore make clear that the "*indications of the first amplified radio frequency signal*" is the radio frequency signal that is *received* at and *applied* to *the second amplified element*.

This point becomes even clearer when the claims are read in light of the specification, including the exemplary embodiment of Fig. 1, which is reproduced below.

Amazon.com, Inc., Amazon.com Services LLC - Ex. 1016, Page 000037

Consistent with Claim 1, for example, Fig. 1 shows a power amplifier arrangement that includes a "first amplifier element" (noted below in red) that generates a "first amplified radio frequency signal" (noted in blue), which is provided to an exemplary bandpass filter (54) for further processing. As Nokia explained in its opening brief, the output of the bandpass filter (54) (noted in yellow) that is received at and applied to the "second amplifier element" (shown in green) corresponds to the "*indications of the first amplified radio frequency signal*" that is described in the claims:

Figure 2 – 700 Patent, Fig. 1 (annotated)

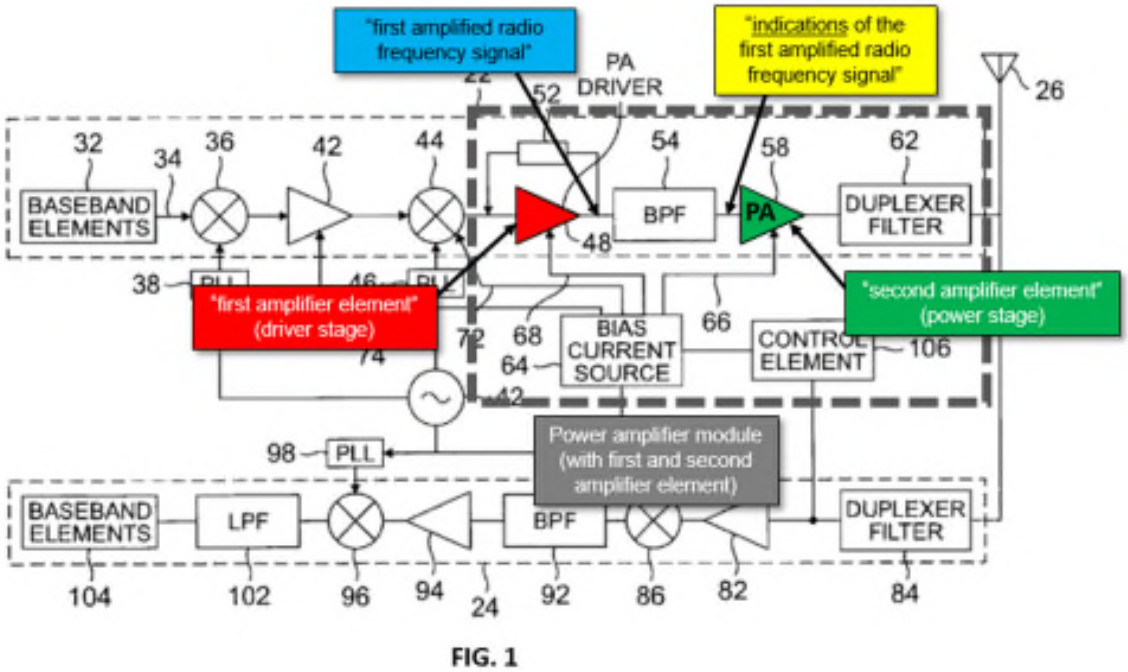

Thus, there is nothing unclear about what this claim term means in the context of the 700 Patent, and Apple's feigned assertion to the contrary is simply not credible. Nokia submits that, when read in light of the plain language of the claims and the supporting disclosure provided in the specification, one of ordinary skill in the art would readily

understand the meaning of this term with reasonable certainty (Ex. 5 [Kenney Rep] at ¶¶ 31-37).

Apple accuses Nokia and the Staff of trying to "re-write" the claims to require a comparison between *the signal itself* (that is received at the second amplifier element) and a threshold value (Apple Br. at 58). But contrary to Apple's assertion, there is nothing in the patent that requires or even suggests that the "indications of the first amplified radio frequency signal" needs to be "*something other than the signal itself*," as Apple contends (Ex. 28 [Kenney Reb. Rep.] at ¶ 25). Apple appears to be trying to ascribe some special and mysterious meaning to the word "indications" so that it can then turn around and say this term is not supported by the specification. But as Nokia has explained, the term "indications" merely makes clear that the radio frequency signal that is received at the second amplifier element does not have to be the *exact* radio frequency signal that is generated by the first amplifier element, but can be one that has been further processed in some manner (for example, by the bandpass filter 54 that is shown in Fig. 1) (*see also* Ex. 28 [Kenney Reb. Rep.] at ¶ 26).

III. U.S. PATENT NO. 7,653,366

A. Apple Mischaracterizes the File History.

Apple begins its substantive discussion of the 366 Patent by claiming, wrongly, that the applicant limited the scope of the asserted claims during prosecution to only two exemplary embodiments, which are shown in Figs. 27B and 30B (Apple Br. at 10-16). But Apple's assertion cannot be reconciled with what actually happened in the prosecution of the patents or with the claims that ultimately issued.

Amazon.com, Inc., Amazon.com Services LLC - Ex. 1016, Page 000039

1. The file history makes clear that the applicant did not limit claim 1 to only the "embodiments" of Figures 27B and 30B.

During prosecution of the 366 Patent, the applicant amended Claim 1 to include the limitation "wherein the switch mode part is configured to be switchable between a slave mode controlled by the linear mode part and a master mode," as shown below:

Figure 3 – Excerpt of Applicant Response to Office Action (366 Patent)[5]

1. (Currently Amended) A DC-DC converter, comprising:

a switch mode part between a DC source and a load, the switch mode part is configured to provide ~~providing~~ x amount of output power; and

a linear mode part in parallel with the switch mode part between the same or a different DC source and the load, the linear mode part configured to provide ~~providing~~ y amount of output power, where x is greater than y, and the ratio of x to y is optimized for particular application constraints,

where the linear mode part exhibits a faster response time to a required change in output voltage than the switch mode part, where the linear mode part compensates at least in part for load variations, wherein the switch mode part is configured to be switchable between a slave mode controlled by the linear mode part and a master mode.

This amendment was made to add a requirement that the switch mode part be switchable between two different modes—a slave mode controlled by the linear mode part and a master mode. To provide context for this amendment, the applicant explained that:

> Claim 1 has been amended to incorporate *the subject matter* from Figures 27(B) (*part SW1*[6]), page 26, lines 23-27, and 30B (*part S1*), page 27, lines 19-25.

---

[5] Ex. 23 [Response to Office Action, dated Aug. 7, 2009, for U.S. Patent No. 7,653,366] at 2 ("366 Patent File History Excerpt").

[6] The parties agree that the reference to switch "SW1" in this passage is an error, and that it is actually "SW2" that allows the switching regulator to be "switchable

(Ex. 23 [366 Patent File History Excerpt] at 7 (emphasis added.)) The switches in Fig. 27B (referred to as "part SW1") and Fig. 30B (referred to as "part S1") provide examples of switches that could be used to make the switch mode part switchable between two different modes as required by the amendment. Notably, the applicant referenced *only the switches*, not the entirety of the figures, and did not exclude any embodiments that included a switch mode part that was switchably operable in both a slave mode and a master mode.

Apple contends that this amendment, combined with the explanatory remarks, somehow requires that claim 1 be construed to cover *only the exact embodiments* shown in Figs. 27B and 30B in their entirety (Apple Br. at 11). Using this logic, Apple seeks to limit claim 1 to the exact embodiments shown in depicted examples, and to read in limitations that have nothing to do with the only part of these figures that was referenced in the remarks—the switches (*see, e.g.*, *id*. ("The '366 specification explains that the *incorporated embodiment of Figure 27B* is operable in two modes…"); *id*. at 14 ("The same holds true for *Figure 30B, the other embodiment* that the '366 applicants *incorporated* into the asserted claims via amendment during prosecution…") (emphasis added)). Apple's attempt to convert the explanatory remarks relating to exemplary switches into a complete disavowal of all other embodiments that are not identical to the entirety of the embodiments of Figs. 27B and 30B is wrong for several reasons.

First, the scope of the limitation that the applicant sought to add to claim 1 is clear on the face of the amendment. Claim 1 before the amendment did not require that the switch mode part be switchable between two different modes. The amendment added

---

between a slave mode controlled by the linear mode part and a master mode" (Apple Br.

Amazon.com, Inc., Amazon.com Services LLC - Ex. 1016, Page 000041

this limitation and the language of the claim does not restrict the implementation of the switchable switch mode part aside from requiring that it be switchable between a slave mode and a master mode. Nothing in the remarks on which Apple relies requires any further limitation on the claimed language. Rather, the applicant explained that the *subject matter* of the switches present in two embodiment was *incorporated* into the claim, and it is. The subject matter—i.e., a switchable switch mode part—is included in claim 1 as the language of the amendment makes clear. But that does not mean that no other embodiments of switchable switch mode parts are included within the scope of the claims.

Second, it is clear on the face of applicant's statement that the applicant was not trying to incorporate Figs. 27B and 30B in their *entirety*, as Apple contends, but instead was referring to certain *switching* portions of Figs. 27B ("part SW2") and 30B ("part S1") to show that the specification included express support for the amendment that was being made to Claim 1, i.e., "*wherein the switch mode part is configured to be switchable between a slave mode controlled by the linear mode part and a master mode*." Thus, contrary to Apple's assertion, "the subject matter" that was being "incorporated" into Claim 1 was not the *embodiments* of Figs. 27B and 30B in their entirety, but rather it was "switchable" switch mode part. If the claims were that narrowly tailored, as Apple suggests, the amended claim language would have reflected that fact.

This point is further evidenced by the numerous statements that the applicant made in the course of distinguishing the prior art references that were at issue, where the applicant repeatedly made clear that the added limitation required only that the switch

---

at 11 n.4).

Amazon.com, Inc., Amazon.com Services LLC - Ex. 1016, Page 000042

mode part be switchable between a slave mode and a master mode, not that this feature be implemented using a specific embodiment. For example, in distinguishing two of the prior art references that were at issue (known as "Amin" and "Fujii") the applicant stated:

> As such, Amin fails to disclose or suggest "*the switch mode part is configured to be switchable between a slave mode controlled by the linear mode part and a master mode*."
>
> Because neither Fuji nor Amin teach or disclose *this claimed subject matter*, any purported combination of these two references would fail to teach or suggest *this claimed subject matter*.
>
> Thus, claims 1, 4-6, 11-13, 18-22, and 25 are not made obvious by Fujii and Amin.

(Ex. 23 [366 File History Excerpt] at 9 (emphasis added.)) Similarly, in distinguishing another prior art reference that was at issue (known as "Liu") the applicant again stated:

> Liu fails to disclose or suggest "*the switch mode part is configured to be switchable between a slave mode controlled by the linear mode part and a master mode*."
>
> Because none of Fujii, Amin, and Liu teaches or discloses *this claimed subject matter*, any purported combination of these references would fail to teach or suggest *this claimed subject matter*.
>
> Thus, claims 2, 3, 7-10, and 14-16 are not made obvious by Fujii in view of Amin and further in view of Liu.

(*Id.*) The applicant repeatedly made clear that "the subject matter" that was being "incorporated" into Claim 1 was *the* newly recited limitation "*wherein the switch mode part is configured to be switchable between a slave mode controlled by the linear mode part and a master mode,*" and not the entirety of the "embodiments" of Figs. 27B and 30B, as Apple contends. When read in light of the Applicant's entire response, the statement Apple relies on does not even come close to meeting the high standard that the Federal Circuit requires for proving a disavowal, especially one as sweeping as Apple alleges here. *See, e.g., Comcast IP Holdings I LLC v. Spring Commc'ns Co., L.P.*, 850

F.3d 1302, 1313 (Fed. Cir. 2017) (stating that "precedent requires" that disavowal be both "clear and unmistakable"); *Mass. Institute of Tech. v. Shire Pharm., Inc.*, 839 F.3d 1111, 1119–20 (Fed. Cir. 2016) (noting the "high standard for prosecution disclaimer to attach"); *Inline Plastics Corp. v. EasyPak, LLC*, 799 F.3d 1364, 1369 (Fed. Cir. 2015) (refusing to find prosecution disclaimer in the absence of "clear and deliberate" disavowal).

2. Apple's alleged disavowal theory cannot be reconciled with the dependent claims.

Even more striking is the fact that Apple's purported disavowal theory cannot be reconciled with the claims themselves, and Apple makes no attempt to address this issue in its brief. As noted above, in distinguishing the prior art references that were at issue in the final Office Action, the applicant not only explained why Claim 1 was patentable but also expressly argued that all *dependent* claims that existed at the time were valid and patentable (*see, e.g.*, Ex. 23 [366 Patent File History Excerpt] at 9 (asserting that "claims 1, 4-6, 11-13, 18-22, and 25 are not made obvious by Fujii and Amin…[and that] claims 2, 3, 7-10, and 14-16 are not made obvious by Fujii in view of Amin and further in view of Liu")). The applicant therefore made clear that he was not abandoning the scope of any of these dependent claims (all of which now appear in the 366 Patent), and the Examiner agreed (Ex. 24 [Notice of Allowance, dated Oct. 22, 2009, for U.S. Patent No. 7,653,366] ("366 Patent Notice of Allowance")). This shows that neither the applicant nor the examiner viewed the statement relied upon by Apple as a disclaimer of the features that are claimed by each of these dependent claims. Yet, if Apple's alleged disavowal theory were correct, which it is not, a number of these existing dependent claims would either be in direct conflict with Claim 1, or at best, be rendered meaningless.

Amazon.com, Inc., Amazon.com Services LLC - Ex. 1016, Page 000044

(i) Apple's alleged disavowal theory is in direct conflict with dependent Claims 15 and 16.

As discussed above, Apple's disavowal theory rests on its contention that the "embodiments" of Figs. 27B and 30B were "incorporated into the asserted claims via amendment during prosecution," and as a result, each of the asserted claims including Claim 1 is necessarily limited to the particular configurations and features that are shown in these two embodiments (Apple Br. at 14). But a careful review of the existing dependent claims of the 366 Patent further unmasks the fallacy of Apple's theory. For example, dependent Claim 15 recites:

> 15. A DC-DC converter as in claim 1, where the switch mode part is operated *open-loop*, and where the linear mode part is controlled by a control signal in a closed-loop manner.

It is beyond a point of dispute that the embodiments of Figs. 27B and 30B both show the "switch mode part" (i.e., switching regulator 100) being operated in a "*closed-loop*" manner, as evidenced by the presence of the feedback signal $V_{feedback_sw}$ shown in both figures (Ex. 28 [Kenney Reb. Rep.] at ¶ 29). According to Apple's logic, this means that Claim 1 of the 366 Patent would be necessarily limited to embodiments in which the switch mode part is operated in a "*closed-loop*" manner, meaning that some type of feedback signal would be used by the switch mode part in every embodiment (as shown in Figs. 27B and 30B). But if that were true, which it is not, Claim 1 would be in direct conflict with dependent Claim 15, which expressly requires that the switch mode part be operated in an "*open-loop*" manner, meaning that a feedback signal could *not* be used by the switch mode part (Ex. 28 [Kenney Reb. Rep.] at ¶ 29).

Amazon.com, Inc., Amazon.com Services LLC - Ex. 1016, Page 000045

This irreconcilable conflict between Apple's theory of Claim 1 and the express requirements of dependent Claim 15[7] is but one example of why Apple's alleged disavowal theory *cannot* be correct, never mind rise to the level of a "clear and unmistakable" disavowal, as Apple contends. *See, e.g.*, *TecSec, Inc. v. Adobe Sys. Inc.*, 658 Fed. App'x. 570, 577 (Fed. Cir. 2016) (noting that "the limitation in the parent [claim should] be at least broad enough to encompass the limitation in the dependent claim"); *Medrad, Inc. v. MRI Devices Corp.*, 401 F.3d 1313, 1317 (Fed. Cir. 2005) (rejecting construction that made it "impossible to read both claim 1 and dependent claim 2 together").

(ii) Apple's alleged disavowal theory is in direct conflict with dependent Claim 17.

Apple's disavowal theory is also in direct conflict with the express requirements of dependent Claim 17. Apple admits that, in the *embodiments* of Figs. 27B and 30B, the linear mode part is configured to operate *only* in a "*master mode*" and thus is never "slaved" to the switch mode part (Apple Br. at 12-15). Yet, in direct contrast to this, dependent Claim 17 requires that the linear mode part be "*effectively slaved*" to the operation of the switch mode part:

> 17. A DC-DC converter as in claim 1, where the *linear mode part* is *effectively slaved* to operation of the *switch mode part* to source or sink current.

Although Apple purports to not understand what the term "*effectively slaved*" means, and thus contends it is indefinite, it is clear on the face of the claim language above that dependent Claim 17 contemplates the linear mode part being "*slaved*" to the

---

[7] Claim 16, which depends from claim 15, would similarly be rendered meaningless.

Amazon.com, Inc., Amazon.com Services LLC - Ex. 1016, Page 000046

switch mode part in at least some capacity (*see also* Ex. 28 [Kenney Reb. Rep.] at ¶ 30). Conceding at least this common sense interpretation of Claim 17, it is apparent that Apple's overly restrictive interpretation of Claim 1 would once again be at odds with the express requirements of an existing dependent claim—showing once again that Apple's alleged disavowal theory cannot be correct. *See, e.g.*, *Ortho-McNeil Pharm. v. Mylan Labs.*, 520 F.3d 1358, 1362 (Fed. Cir. 2008) (noting a construction should not "render claim language in dependent claims meaningless").

(iii) Apple's alleged disavowal theory would render dependent Claims 11, 13, and 20 meaningless.

Dependent Claims 11, 13, and 20 provide further examples of why Apple's alleged disavowal theory is untenable. Dependent Claims 11, 13, and 20 are all directed to features that are explicitly shown in the embodiments of Figs. 27B and 30B. According to Apple's theory, this means that these claimed features would have already been "incorporated" into Claim 1, rendering them meaningless as separate dependent claims. For example, dependent Claim 11 recites "*A DC-DC converter as in claim 1, where, when the switch mode part is in the master mode, the switch mode part and the linear mode part are controlled in common by a control signal in a closed-loop manner*." Apple's own annotated version of Fig. 27B, reproduced below, shows that when the switch mode part (noted in yellow) is in the master mode, the switch mode part and the linear mode part (noted in blue) are "controlled in common by a control signal" (V_m) "in a closed-loop manner," with the "closed-loop manner" requirement being satisfied by the feedback signals $V_{feedback_sw}$ and $V_{feedback_lin}$ that are shown going into the switch mode part (noted in yellow) and the linear mode part (noted in blue), respectively:[8]

[8] *See also* Ex. 28 [Kenney Reb. Rep.] at ¶ 31.

Amazon.com, Inc., Amazon.com Services LLC - Ex. 1016, Page 000047

Figure 4 – 270 Patent (annotated, as shown in Apple's Opening Brief)

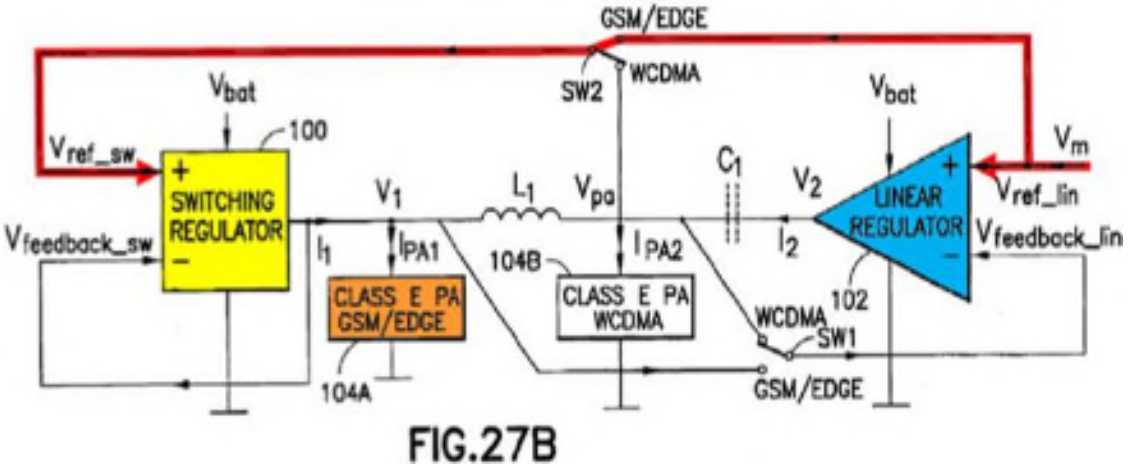

Dependent Claims 13 and 20 are likewise directed to features that are explicitly shown in the embodiments of Figs. 27B and 30B (Ex. 28 [Kenney Reb. Rep.] at ¶ 31). Thus, according to Apple's theory of the prosecution history, these claimed features would have all already been incorporated into Claim 1, rendering them meaningless. "Where a particular construction of an independent claim would nullify claims that depend from it, the doctrine of claim differentiation creates a presumption that such a construction is improper." *Marine Polymer Techs., Inc. v. HemCon, Inc.*, 672 F.3d 1350, 1368 (Fed. Cir. 2012); *see also Phillips*, 415 F.3d at 1315 (the "presence of a dependent claim that adds a particular limitation gives rise to a presumption that the limitation in question is not in the independent claim."). Apple's disavowal theory would render at least six dependent claims meaningless, showing that it is not grounded in fact or common sense. Because nearly all of Apple's proposed constructions rely exclusively on Apple's non-existent disavowal theory, those constructions must be rejected as discussed further below.

B. "the ratio of x to y is optimized for particular application constraints" (claim 1)

Nokia's Proposed Construction	Apple's Proposed Construction	Staff's Proposed Construction
"the ratio of x to y is adjusted to different levels to satisfy the constraints of a given application"	Indefinite	"the ratio of x to y is adjusted to obtain acceptable performance for an intended application's RF system specifics" For example, such RF system specifics include the spectrum of RF envelope, amplitude of high frequency AC components, etc.

Apple contends this term is indefinite. But Apple's assertion is belied by its unwillingness to address any of the numerous examples provided in the patent. As explained in Nokia's and the Staff's opening briefs (Nokia Br. at 47-52; Staff Br. at 21-24), the specification of the 366 Patent includes numerous, detailed examples that provide clear support for this claim term and what it would mean to one of ordinary skill in the art. Tellingly, Apple never addresses any of these examples in its opening brief. Instead, Apple spends most of its time setting up a strawman argument in which it talks about what a collection of hypothetical "engineers" might think, without ever actually mentioning the many detailed teachings of the 366 Patent itself. This approach is in direct contravention of *Nautilus*, which requires that an indefiniteness analysis be conducted "in light of the patent's specification and prosecution history." *Nautilus, Inc. v. Biosig Instruments, Inc.*, 134 S. Ct. 2120, 2129 (2014).

By not addressing these numerous examples in the patent, Apple conveniently ignores that the term "optimize" is used broadly to refer to adjustments between "x" and "y" to address different design goals, such as when a multi-mode mobile device is

Amazon.com, Inc., Amazon.com Services LLC - Ex. 1016, Page 000049

operating in relation to different wireless applications (e.g., GSM, EDGE, WCDMA). These various examples in the patent do not require specific ratios of x to y and clearly contemplate a broad definition. *See Enzo Biochem, Inc. v. Applera Corp.*, 599 F.3d 1325, 1335 (Fed. Cir. 2010) (rejecting an indefiniteness challenge to the term "not interfering substantially" even though the patent defined the term without any reference to a precise numerical measurement); *see also Young v. Lumenis, Inc.*, 492 F.3d 1336, 1346 (Fed. Cir. 2007) (finding that a term of degree was definite even without any numerical construction). Apple appears to confuse this breadth with indefiniteness, but courts have long recognized that such "[b]readth is not indefiniteness." *Ultimax Cement Mfg. Corp. v. CTS Mfg. Corp.*, 587 F.3d 1339, 1352 (Fed. Cir. 2009) (citing *In re Gardner*, 427 F.2d 786, 788 (C.C.P.A. 1970); *see also* Ex. 28 [Kenney Reb. Rep.] at ¶ 32.

1. Apple's cited cases are inapposite and easily distinguishable.

Apple's reliance on *Interval Licensing LLC v. AOL, Inc.* to support its assertion that the 366 Patent allegedly provides no "objective boundaries" is misplaced. In *Interval Licensing*, the court described the term "unobtrusive manner" as "purely subjective" and found it indefinite based on the lack of "sufficient guidance" in the specification. 766 F.3d 1364, 1371 (Fed. Cir. 2014). But, as explained later by the Federal Circuit in *Sonix*, the written description in *Interval Licensing* contained only a single example, which itself lacked sufficient detail. *Sonix*, 844 F.3d at 1378; *see also DDR Holdings*, 773 F.3d at 1260–61 (contrasting the examples provided in the specification with the lack of guidance in *Interval*). Here, similar to *Sonix* and *DDR Holdings,* the 366 Patent contains numerous, detailed examples that provide more than "sufficient guidance" to one of ordinary skill in the art (Nokia Br. at 47-52; Kenney Rep. at ¶¶ 45-51).

Amazon.com, Inc., Amazon.com Services LLC - Ex. 1016, Page 000050

Apple also cites to *Datamize, LLC v. Plumtree Software, Inc.* as allegedly supporting its position. But Apple's reliance is again misplaced. In *Datamize*, the patentee itself argued that the term at issue ("aesthetically pleasing") should be construed as depending on the "subjective opinion" of a user. 417 F.3d 1342, 1349 (Fed. Cir. 2005). Moreover, the court noted that because the written description stated there were "good standards of aesthetics," the existence of "not good" standards was also implied, but there was no attempt to explain the distinction. *Id*. at 1352. The prosecution history of a continuation patent further enforced the notion that the term had no objective meaning concerning the scope of the claim. In particular, after receiving an indefiniteness rejection on the *same term*, the applicant dropped it from the claim, arguing it was "superfluous and unnecessary." *Id*. at 1353. None of these deficiencies apply here. Instead, the 366 Patent includes numerous examples of different applications in which the claimed hybrid power supply can operate (e.g., GSM, EDGE, WCDMA) and how the ratio of x to y would be adjusted to satisfy the constraints associated with each of those different exemplary applications.

Apple also relies on two district court decisions that are inapposite. First, in *In re TR Labs Patent Litig.*, the court found that the term "increases and optimizes demand served" was indefinite because the specification identified a host of possible constraints and failed to explain how those constraints were related to the claimed subject matter. 2014 WL 3500596, at *4 (D.N.J. July 14, 2014) (denoted "Not for Publication"). In contrast, the 366 Patent explains in great detail how the application constraints described relate to the optimization of the x to y ratio (*see, e.g.*, 366 Patent at 6:13-64, 15:16-16:7). In particular, the specification of the 366 Patent gives specific guidance in the form of

Amazon.com, Inc., Amazon.com Services LLC - Ex. 1016, Page 000051

numerous, detailed examples for how the ratio may be adjusted for specific applications, such as GSM, EDGE, and WCDMA (*id*. at 15:16-16:7).

Apple's reliance on *Optimum Processing Solutions, LLC v. AMD* is equally misplaced. In *Optimum*, the Special Master found that the terms "optimized" and "optimum manner" were indefinite because the specification provided no description regarding how, in what respect, or relative to what metric the optimization occurs. No. 09-cv-1098, at *12 (N.D. Ga. July 10, 2012). As Apple admits, in *Optimum* the Special Master noted that the patent did not "*give examples of or otherwise indicate*" any objective criteria for the term at issue, *id.* at *12 (emphasis added), and generally failed to discuss or explain the claimed functionality. *Id*. at *15. This is directly contrary to the situation here, where the 366 Patent includes numerous detailed examples that provide ample support for allowing a skilled artisan to understand the scope of this tem with reasonable certainty (Nokia Br. at 48-52; Ex. 5 [Kenney Rep.] at ¶¶ 45-51; Ex. 28 [Kenney Reb. Rep.] at ¶ 32).

At its core, Apple's argument rests on the proposition that the term "optimum" is purportedly subject to the "varying subjective beliefs of different individuals" and thus is necessarily indefinite (*see* Apple Br. at 19). This argument ignores, of course, the clear teaching in the specification about how different applications can call for specific, defined trade-offs between the use of the linear mode part and the switch mode part. And it is for this reason—that the specification provides sufficient teaching to one of ordinary skill—that courts have repeatedly found the term "optimize" amenable to construction. *E.g.*, *Dane Techs., Inc. v. Gatekeeper Sys., Inc.*, 2014 WL 3420788, at *8 (D. Minn. July 14, 2014) (construing "optimize"); *Cascades Computer Innovation LLC v. Dell Inc.*,

Amazon.com, Inc., Amazon.com Services LLC - Ex. 1016, Page 000052

2014 WL 26288, at *4–*5 (N.D. Ill. Jan. 2, 2014) (construing "optimized" / "optimizing"); *Carl Zeiss Vision Int'l GMBH v. Signet*, 2008 Markman 4951984, at *3 (S.D. Cal. June 2, 2008) (construing "individually optimized").

Finally, Apple complains that the specification does not define "application constraints" (*see* Apple Br. at 25). Here, Apple is again wrong. The patent is very specific about the differing applications in the specification: GSM, EDGE, and WCDMA, and the constraints imposed by each of them. In GSM, for example, the patent teaches, "the RF envelope is constant," requiring little need of the inefficient linear mode part (366 Patent at 15:16-37). In EDGE, "or, in general, any system having a variable RF envelope with moderately high dynamics (e.g., required BW >1MHz)," use of the slower switch mode part alone is not "robust" (*id*. at 15:38-63). Finally, "[i]n the WCDMA system, or in general, any system that exhibits a variable RF envelope with high dynamics (e.g., a required BW>15MHz)," the linear regulator is required to meet the bandwidth constraints of that application (*id*. at 15:64-16:7).

C. "slave mode controlled by the linear mode part" (claims 1, 13)

Nokia's Proposed Construction	Apple's Proposed Construction	Staff's Proposed Construction
"mode in which an output from the linear mode part is used as a reference signal for the switch mode part"	"mode in which the reference signal of the switch mode part is the output of the linear mode part"	"mode in which the output from the linear mode part is a reference signal for the switch mode part"

1. Nokia's construction should be adopted over the Staff's construction.

Nokia agrees with the Staff that the output of the linear mode part that is used to "slave" the switch mode part cannot be just *any* output, but has to be an output that is

Amazon.com, Inc., Amazon.com Services LLC - Ex. 1016, Page 000053

applied to the load, as shown in each of the exemplary embodiments of the patent. Nokia does not believe, however, that the patent expressly precludes the linear mode part from providing two separate outputs to the load, in which case, either of those outputs could be used as a reference signal to slave the switch mode part. Only Nokia's construction accounts for this possibility.

As the Staff points out (Staff Br. at 25) when discussing the exemplary embodiment disclosed in Figure 25B, the 366 Patent states: "The switching regulator 100 is a 'slave', meaning that it has as a reference signal *the voltage applied to the SMPA 104 by the linear regulator 102*, and attempts to follow it as accurately as possible" (366 Patent at 15:9-12 (emphasis added)). This exemplary control configuration is illustrated by the green line in the annotated version of Fig. 25B that is shown below:

Figure 5 – 366 Patent, Fig. 25B (annotated)

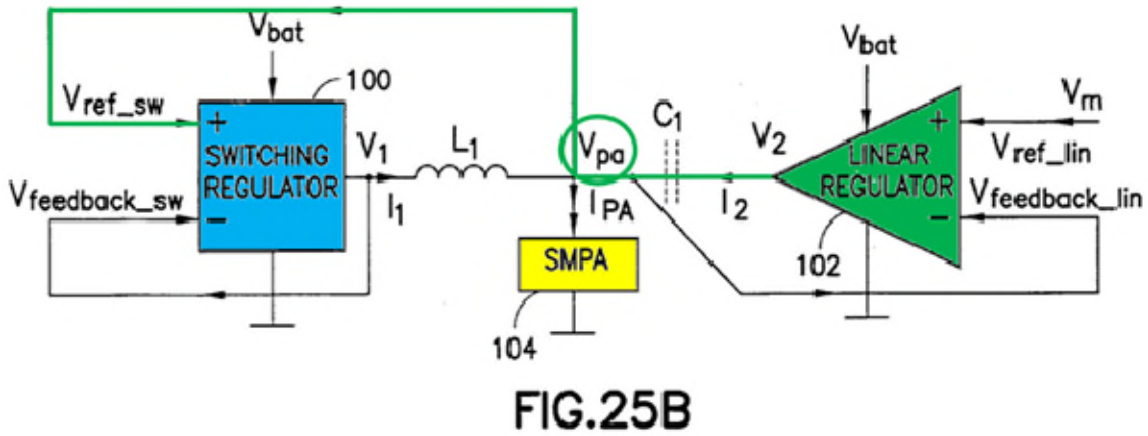

FIG.25B

Similarly, when discussing another exemplary embodiment, which is disclosed in Fig. 26B, the 366 Patent states: "In FIG. 26B the linear regulator 102 is the `master` and the switching regulator 100 is the `slave`, meaning that its reference signal is the output of the linear regulator, Vpa," that is applied to the load (e.g., PA modules 104A, 104B).

As with Fig. 25B above, this exemplary control configuration is illustrated by the green line in the annotated version of Fig. 26B that is shown below:

Figure 6 – 366 Patent, Fig. 26B (annotated)

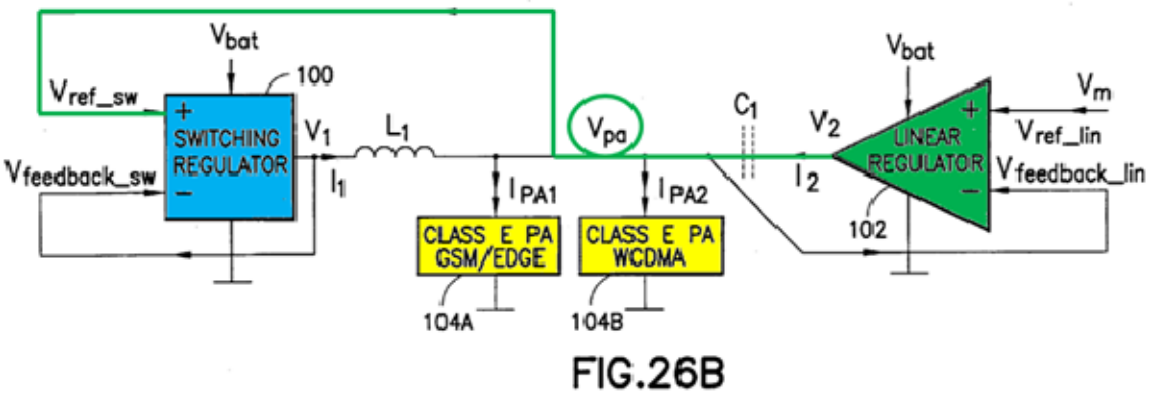

The important feature of both of the embodiments included above is that the output of the linear mode part that is used to "slave" the switch mode part must be an output provided to the load because that is what allows the switch mode part to follow, or track, the linear mode part in a "slave mode." But nothing in these embodiments, or elsewhere in the claims or specification, precludes the possibility that the linear mode part could have multiple outputs that are not used for the slave mode (*see, e.g., id.*, at Cl. 13 (reciting: "A DC-DC converter as in claim 1, where, when the switch mode part is in the *slave mode*, the switch mode part is controlled by *an* output from the linear mode part…") (emphasis added)). Although the linear mode part has only a single output in the illustrated embodiments, there is nothing in the 366 Patent that precludes the linear mode part from having additional outputs and therefore there is no reason to import such a limitation into the claims. *See, e.g., Hill-Rom Services, Inc. v. Stryker Corp.*, 755 F.3d 1367, 1371–72 (Fed. Cir. 2014) ("This court has expressly rejected the contention that if a patent describes only a single embodiment, the claims of the patent must be construed

as limited to that embodiment. [E]ven where the specification describes only a single embodiment, the claims will not be read restrictively unless the patentee has demonstrated a *clear intention* to limit the claim scope using words or expressions of *manifest exclusion or restriction*.") (internal quotations omitted) (emphasis added).

The purpose of the "slave" mode is to make sure that the switch mode part follows the linear mode using an output applied to the load (Ex. 28 [Kenney Reb. Rep.] at ¶ 34). That purpose is achieved regardless of whether or not the linear mode part has a single output, or multiple outputs, so long as an output of the linear mode part as applied to the load is used as a reference signal for the switch mode part. Nokia therefore submits that its construction should be adopted over the construction offered by the Staff.

2. Apple's proposed construction is incorrect.

Apple's whole argument for this term, and the next, is premised on its flawed theory of the prosecution history. As discussed above, Part III.A, when read in light of what really happened during prosecution and the claims that existed at that time, there is no reason to limit the claims to the embodiments shown in Figs. 27B and 30B, as Apple suggests. If the claims were that narrowly tailored, the amended claim language would have reflected that fact. But it is clear that the claims as amended were not intended to be limited to only the exact embodiments of Figs. 27B and 30B, and as discussed above, even those embodiments do not preclude the use of additional reference signals by the switch mode part or the existence of additional output signals from the linear mode part.

Absent this alleged disclaimer, Apple effectively concedes that its constructions for this term, and the next, are too narrow. Apple does not even try to address the instances where broader language is used in the specification or the lack of limiting

Amazon.com, Inc., Amazon.com Services LLC - Ex. 1016, Page 000056

language, beyond its alleged prosecution disclaimer theory. Thus, when that theory is properly rejected, Apple's proposed construction must be similarly rejected.

D. "master mode" (claims 1, 4)

Nokia's Proposed Construction	Apple's Proposed Construction	Staff's Proposed Construction
"mode in which a modulating signal is used as a reference signal for the switch mode part"	"mode in which the linear mode part and the switch mode part use the same reference signal"	"mode in which the switch mode part has as a reference signal a modulating signal"

As discussed in Nokia's opening brief, the scope of its proposed construction and that offered by the Staff appear to be the same. Apple's construction, on the other hand, improperly imports an additional limitation. Apple's reasoning for importing this limitation, however, is again based on its alleged prosecution disclaimer theory, which for the many reasons discussed above in Part III.A. is untenable. Absent this alleged disclaimer, Apple effectively concedes that its construction for this term is too narrow, as Apple does not even attempt to address the instances where broader language is used in the specification or the lack of any disclaimer, beyond its attempt to limit the claims based on a mischaracterization of the prosecution history. Moreover, Apple's own expert does not even appear to offer any support for Apple's construction. As Nokia and the Staff both point out in their opening briefs, nothing in the 366 Patent limits this term to require that the switch mode part and the linear mode part use *the same* reference signal when the switch mode part is operated in a "master mode," as Apple contends (*see also* Ex. 28 [Kenney Reb. Rep.] at ¶ 33). Nokia's construction should therefore be adopted.

Amazon.com, Inc., Amazon.com Services LLC - Ex. 1016, Page 000057

E. "effectively slaved to operation of the switch mode part" (claim 17)

Nokia and the Staff's Proposed Construction	Apple's Proposed Construction
"configured to use a control signal that is provided to the switch mode part as a reference signal"	Indefinite

Apple's assertion that this term is indefinite is belied by its complete failure to address the relevant disclosure provided in the specification. As noted by the Staff (Staff Br. at 1), the parties met and conferred on April 10, 2017, in an effort to reduce the number of disputed claim terms. During that call, Apple asked how it was that both Nokia and the Staff came up with the same construction for this term. Nokia and the Staff explained that their agreed upon construction was based on the express disclosure in column 18 of the specification (including column 18, lines 1-50). Despite this knowledge, Apple chose to completely ignore this portion of the specification in its opening brief (Apple Br. at 34-35). Apple's ostrich approach demonstrates how far Apple must go to maintain its position that this term is indefinite. Not only is this claim term definite (Nokia Br. 60-62; Staff Br. 29-31), but it also shows that Apple's constructions for other terms like "master mode" are too narrow (*see also* Ex. 28 [Kenney Reb. Rep.] at ¶ 35).

If Apple were correct in its theory that the patentee purportedly limited the claims to only the two embodiments shown in Figs. 27B and 30B, then claim 17 would be in direct conflict with Claim 1, as discussed above (Argument Section III.A.2.ii). This is because the embodiments shown in Figs. 27B and 30B both show the linear mode part in a *master mode* configuration, whereas claim 17 requires that the linear mode part be effectively *slaved* to the operation of the switch mode part. For this reason alone, Apple's

Amazon.com, Inc., Amazon.com Services LLC - Ex. 1016, Page 000058

theory that the claims are limited to only the two embodiments shown in Figs. 27B and 30B should be rejected.

IV. U.S. Patent No. 9,473,602

A. Apple mischaracterizes the 602 Patent technology background.

In its brief, Apple mischaracterizes the background of the technology disclosed in the 602 Patent. Specifically, Apple attempts to deemphasize the substantial limitations that were overcome by the invention disclosed in the 602 Patent. As Nokia explained in its Opening Brief, prior to the invention disclosed in the 602 Patent, mobile phone designers struggled to find a way to make a thin phone that was also structurally and internally sound (Ex. 29 [Rebuttal Expert Report of Dr. Franco Lodato Regarding Claim Construction] at ¶ 22 ("Lodato Reb. Rep.")). Because the internal components of a mobile phone contributed to the structural strength of a device, structural considerations dictated the layout of those components in the phone (*id.*). To provide a phone with the necessary structural strength, designers would often stack the internal components, as shown below:

Amazon.com, Inc., Amazon.com Services LLC - Ex. 1016, Page 000059

Figure 7 – Exploded View of Prior Art Phone Prepared by Dr. Lodato

(*Id*.) The prior art designs cited on the face of the 602 Patent were constructed according to this method (*id*. at ¶ 23). For example, the Motorola RAZR was constructed by stacking the internal components of the phone from the core in this way, in order to provide the necessary strength to the phone (*id*.).

Another way mobile phone designers provided structural support prior to the 602 Patent was to use two or three-piece housings that were screwed or welded together (*id*. at ¶ 24). The internal brackets and screws of these phones provided additional strength to the phones (*id*.). Again, the Motorola RAZR was constructed by screwing two pieces of a housing to one another, as shown below:

Amazon.com, Inc., Amazon.com Services LLC - Ex. 1016, Page 000060

Figure 8 – Photos from iFixit Teardown of Motorola RAZR V3

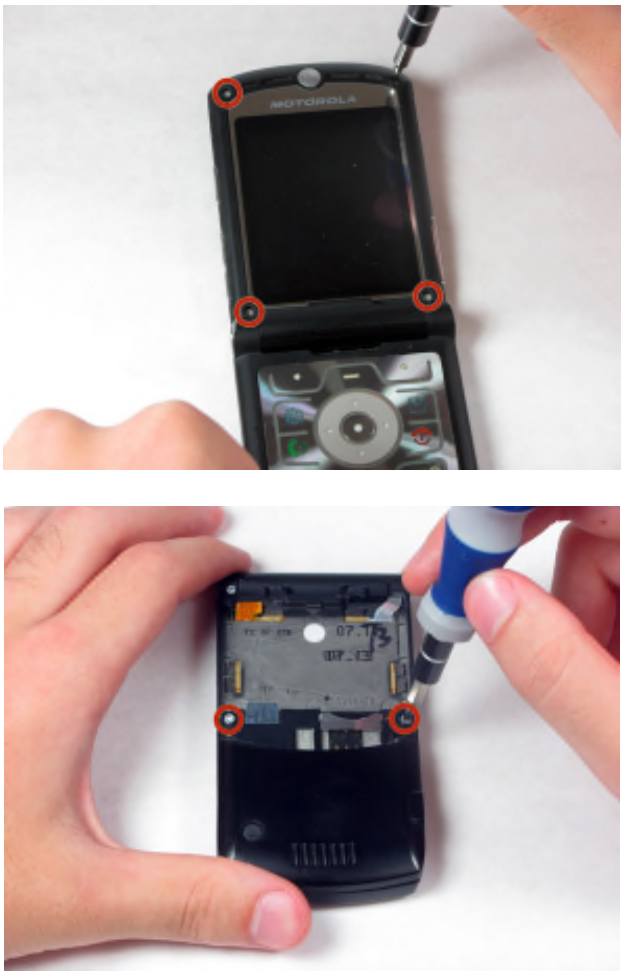

https://www.ifixit.com/Device/Motorola_RAZR_v3

Figure 9 – Photo of Housing of Motorola RAZR V3

http://www.amazon.in/gp/product/B01DY7H1Q6/?tag=buyhatke-21&ascsubtag=website~searchPage~BHODR14924615504256720

The one-piece housing disclosed in the 602 Patent provided enhanced structural strength as compared to previous types of housing and obviated the need to stack internal components or to screw pieces of a housing together (*id*. at ¶ 25). This was a significant innovation and a stark departure from the designs used by other mobile phone designers at the time, as it was very difficult and costly to achieve this type of one-piece housing (*id*.). Those of skill in the art would not have thought that a one-piece housing design for a mobile phone, or any other portable communications device that included both wireless communications and camera functionality, would be functionally possible given the technology limitations at the time (*id*.).

In its Opening Brief, Apple does not identify a single mobile phone that existed prior to the invention disclosed in the 602 Patent and had a one-piece housing. Instead, it points to the housing of the Apple iPod mini (depicted below) as an example of a one-piece housing (Apple Br. at 60, 63).

Figure 10 – Photos of Housing of iPod Mini

https://support.apple.com/en-us/HT204217;
https://www.ifixit.com/Guide/iPod+Mini+Casing+Replacement/410)

While it is true that the housing of the iPod mini appears to consist of one main piece, such a housing would not have been used for mobile phones at the time of the invention disclosed in the 602 Patent (Ex. 29 [Lodato Reb. Rep.] at ¶ 27). There are many

Amazon.com, Inc., Amazon.com Services LLC - Ex. 1016, Page 000062

components in a mobile phone that would not have been present in the iPod mini (*id*.). For example, a mobile phone must contain a transceiver and an antenna in order to enable wireless communication, not to mention a place to insert a SIM card (*id.*). The iPod mini was not able to communicate wirelessly or connect to the Internet, and thus did not contain either an antenna or transceiver (*id*.).

This distinction is important, as there are design constraints that come with the inclusion of a transceiver and/or antenna in a mobile phone (*id*.). For example, it is necessary to shield and separate the components of a phone that receive signals as much as possible from the other components of the phone to avoid interference (*id*.). Additionally, the signal receiving components must be placed in a phone in such a way as to maximize their ability to receive signals (*id*.). Further, the antenna of a mobile phone needed to be somewhat exposed to the air, so at the time of the invention, encasing the antenna in metal would disrupt the signal (*id*.).

Additionally, the iPod mini did not include a camera, as the invention disclosed in the 602 Patent does (*id*. at ¶ 28). A camera necessarily takes up space in a mobile phone and thus must be incorporated into the design of the phone, which places additional constraints on how the internal components of a phone can be laid out (*id*.). For at least the foregoing reasons, those of skill in the art would not consider a design similar to the iPod (or any other device that does not require wireless communications/camera functionality) as being applicable to a housing design for a mobile phone or other mobile

Amazon.com, Inc., Amazon.com Services LLC - Ex. 1016, Page 000063

device incorporating a transceiver and capable of communicating wirelessly, which is the type of housing disclosed in the 602 Patent (*id.*).[9]

B. "housing forming enclosed exterior lateral sides and a rear side" / "housing…forming enclosed exterior lateral sides and a rear side" (claims 1, 15, 22)

Nokia and the Staff's Proposed Construction	Apple's Proposed Construction
Construction of this term is unnecessary. If construction is required, however, this term should be construed consistent with its plain and ordinary meaning, which is the claim language itself. Alternatively: "member that houses forming enclosed exterior lateral sides and a rear side"	"tubular housing"

As discussed below, Apple's proposed construction of "housing forming enclosed exterior lateral sides and a rear side" is much too narrow, particularly if it requires that the housing have a "front side." The term should instead be afforded its plain and ordinary meaning, which is the language of the term itself.

Apple contends that the specification of the 602 Patent "consistently and exclusively" describes the claimed housing as "tubular" (Apple Br. at 73). This is simply incorrect. As Nokia pointed out in its Opening Brief, the specification does not consistently describe the housing as "tubular" (Ex. 29 [Lodato Reb. Rep.] at ¶ 31). For example, the specification first simply describes the housing as "a first housing member" (602 Patent at 3:27-32; Ex. 29 [Lodato Reb. Rep.] at ¶ 31). The specification then states that the "first housing member *generally* comprises a one-piece tubular member" (*id.* at 3:27-32 (emphasis added); Ex. 29 [Lodato Reb. Rep.] at ¶ 31). The use of the word

[9] The Apple iPod mini is cited on the face of the 602 Patent (*see* 602 Patent at p. 3). It was thus considered by the Patent Office during prosecution of the 602 Patent.

Amazon.com, Inc., Amazon.com Services LLC - Ex. 1016, Page 000064

"generally" indicates that the housing does not always have to be tubular (Ex. 29 [Lodato Reb. Rep.] at ¶ 31). Then, immediately after that line, the specification again simply describes the housing as "the first housing member," with no mention of the word "tubular" (602 Patent at 3:36-39). In its brief, Apple points out every time the word "tubular" is used in the specification, but it wholly ignores the times that the housing is described without the use of the word "tubular," as in the examples given above.

But the word "tubular" is only part of the problem with Apple's construction.[10] Apple now confirms that its proposed construction of "tubular housing" requires that the claimed housing must have an enclosed front side (Apple Br. at 75-77). So Apple's true construction would transform a "housing forming enclosed exterior lateral sides and a rear side" into a completely different "*tubular* housing forming enclosed exterior lateral sides, a rear side, *and an enclosed front side*." This argument further demonstrates the impropriety of Apple's proposed construction. In its brief, Apple identifies figures, such as Fig. 7, that depict embodiments of the invention with an enclosed front side, while ignoring those figures, such as Figs. 11-13, that depict embodiments of the invention *without* an enclosed front side.

However much Apple would like to wish away those embodiments, they remain an insurmountable obstacle to its construction. Indeed, Apple's failure to discuss them in its opening brief can only be explained by the fact that there is no good response. During

---

[10] "Tubular," by itself, could be understood to refer only to the "tube-like" shape created by exterior lateral sides and a rear side, which forms half of a tube. In many of the instances where "tubular" is used in the specification, it describes only those features (602 Patent at 1:55-56, 3:30-39, 4:43-48). But Apple goes much further by arguing that "tubular" somehow requires both a front side and an open top and bottom (Apple Br. at 75-77). None of these added limitations are appropriate, but Apple's attempt to inject

Amazon.com, Inc., Amazon.com Services LLC - Ex. 1016, Page 000065

the claim construction meet and confer process, counsel for Nokia identified for Apple's counsel the figures of the 602 Patent that do not contain an enclosed front side, but Apple nevertheless chose to completely ignore those figures in its brief. Indeed, when comparing Fig. 13 of the 602 Patent, which shows a cross section of an embodiment of the invention with no front side, to a cross section of Fig. 1, which shows a separate embodiment of the invention that has a front side, the lack of a front side in Fig. 13 becomes readily apparent, as shown below.

Figure 11 – 602 Patent, Fig. 13 (annotated)

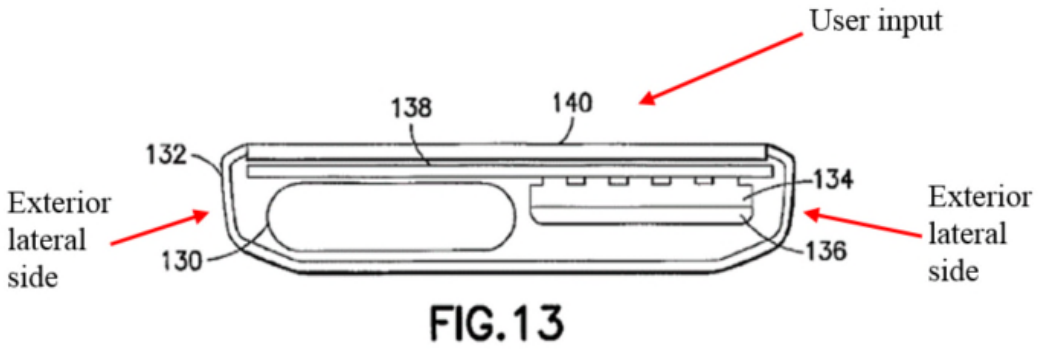

even more limitations by construing its own construction demonstrates the real motive behind its attempts to import a "tubular" limitation in the claims.

Figure 12 – Cross Section of 602 Patent, Fig. 1 (annotated)[11]

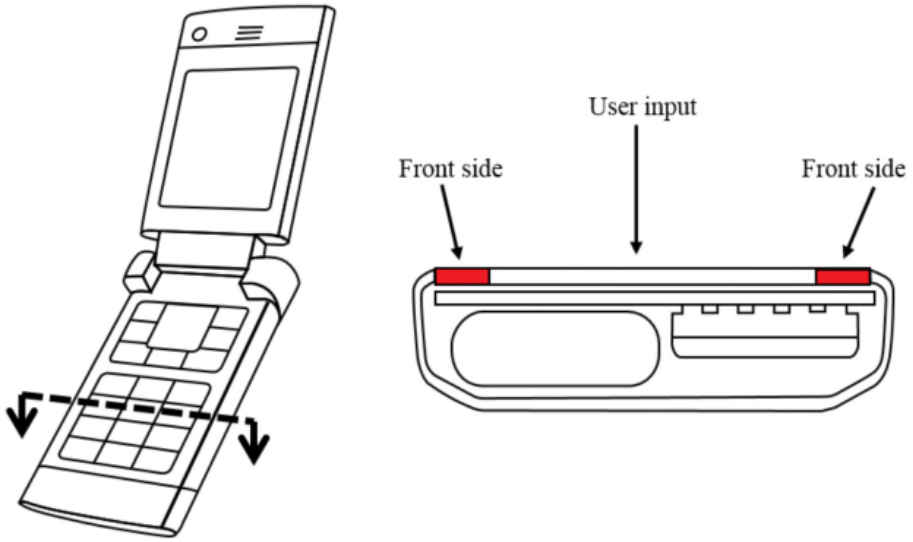

As shown above, a cross-section of the one-piece housing from the embodiment disclosed in Fig. 1 of the 602 Patent would include front sides that flank the user input and run parallel to the rear side of the mobile phone. This inclusion of a front side establishes that Fig. 1 and Fig. 13 of the 602 Patent illustrate different embodiments of the one-piece housing, both with and without font sides.

Additionally, Apple's own argument in its brief demonstrates how the "front side" aspect of some embodiments of the invention is described separately and apart from the description of the one-piece housing (*see* Apple Br. at 75). For example, the specification states that "[t]he first housing member 28 forms a majority of opposite exterior lateral sides 38 and a rear side 40 of the first section 12" (602 Patent at 3:36-39). The specification then separately describes the "front side" of the housing (*id*. at 3:39-41).

[11] To be clear, the cross section shown in Figure 12 is not a figure from the 602 Patent. This cross section was drawn to scale based on the dimensions of Fig. 1 of the 602 Patent. If Fig. 1 of the 602 Patent were depicted as a cross section taken at the lines

This demonstrates that the claimed "housing" does no more than form enclosed exterior lateral sides and a rear side, and the "front side" is an additional feature of the invention that is only present in some embodiments.

Moreover, the doctrine of claim differentiation clearly confirms that the disclosed "housing" is not required to have a front side. Under Apple's proposed construction of the disputed term, the beginning of Claim 1 of the 602 Patent would read as follows: "A portable electronic device comprising: a *tubular* one piece housing forming enclosed exterior lateral sides, a rear side, *and a front side*." Then, Claim 2, which depends from Claim 1, would still read: "A portable electronic device according to claim 1 wherein said one piece housing has a front side extending from and between the lateral sides." Claim 2 would thus be rendered wholly meaningless, in direct violation of the doctrine of claim differentiation. *Liebel-Flarsheim Co. v. Medrad, Inc.*, 358 F.3d 898, 910 (Fed. Cir. 2004) ("[T]he presence of a dependent claim that adds a particular limitation raises a presumption that the limitation in question is not found in the independent claim.").

Apple also appears to contend that the claimed "housing" must have open top and bottom ends (Apple Br. at 75-76). Once again, this argument must be rejected under the doctrine of claim differentiation. Independent Claim 15 includes the disputed term "one piece housing forming enclosed exterior lateral sides and a rear side" (602 Patent at 7:7-9). Claim 19, which depends from Claim 15, adds: "A housing according to claim 15 wherein the housing has substantially at least one of an open top or bottom aperture" (*id*. at 7:32-34). Claim 19 thus adds the limitation of open top *or* bottom ends, and Claim 15 should not be read to include that limitation. *See Liebel-Flarsheim Co.*, 358 F.3d at 910.

---

noted in the figure on the left above, it would appear approximately as shown on the right

Amazon.com, Inc., Amazon.com Services LLC - Ex. 1016, Page 000068

Under Apple's contorted construction, both options added by Claim 19 would already be required by the term "housing" in Claim 15.

Apple argues that Nokia and the Staff's proposed construction of the disputed term is not correct because it would allegedly cover the prior art (Apple Br. at 78). This argument is without merit. The rule that a claim term should not be read to cover the prior art only applies if there is more than one plausible construction of the disputed term. *See Xerox Corp. v. 3Com Corp.*, 61 Fed. App'x 680, 683 (Fed. Cir. 2003) (noting that claims should be construed to be valid only when they are "amenable to more than one construction"); *Warner Mfg. Co. v. Armstrong*, 504 F. Supp. 2d 589, 591 (D. Minn. Mar. 30, 2007) ("Invalidity is sometimes relevant [to claim construction], but only when two constructions are equally plausible."); *see also Phillips*, 415 F.3d at 1328 (holding that a claim can be construed without considering the prior art when "the claim term at issue is not ambiguous"). As demonstrated above and in Nokia's and the Staff's opening briefs, only Nokia and the Staff's proposed construction of "housing forming enclosed exterior lateral sides and a rear side" is viable. Apple's alternative blatantly reads in multiple limitations that are simply not present in the claims.

Additionally, the invention disclosed in the 602 Patent is more than just the claimed "housing." There are many additional features of the invention, such as the layout of internal components of a mobile phone. It is the combination of all of the elements of the claimed invention that distinguish it from the prior art, not simply the housing. Moreover, as Apple itself demonstrates in its opening brief and expert report, none of the prior art mobile phones identified by Apple had a one piece housing forming

---

above. The cross-section of the front side is highlighted in red.

Amazon.com, Inc., Amazon.com Services LLC - Ex. 1016, Page 000069

enclosed exterior lateral sides and a rear side (*see* Apple Br. at 60-61; *see also* Ex. 29 [Lodato Reb. Rep.] at ¶¶ 22-28). Nokia's proposed construction thus would not encompass the prior art.

For all of the foregoing reasons, as well as the reasons set forth in Nokia's and the Staff's opening briefs, Apple's proposed construction of "housing forming enclosed exterior lateral sides and a rear side" should be rejected, and the term should be afforded its plain and ordinary meaning.

CONCLUSION

For the foregoing reasons, Nokia respectfully requests that the Chief ALJ construe the disputed terms in accordance with Nokia's proposed constructions.

Dated: May 2, 2017

Respectfully Submitted,

/s/ Adam D. Swain

Patrick J. Flinn
John D. Haynes
Wesley C. Achey
David S. Frist
ALSTON & BIRD LLP
One Atlantic Center
1201 West Peachtree Street
Suite 4900
Atlanta, GA 30309
Telephone: (404) 881-7000
Facsimile: (404) 881-7777
Email: Apple-ITC@alston.com

Adam D. Swain
ALSTON & BIRD LLP
950 F Street, NW
Washington, DC 20004
Telephone: (202) 239-3300
Facsimile: (202) 239-3333

Theodore Stevenson, III
Nicholas Mathews
McKool Smith, P.C.

300 Crescent Court, Suite 1500
Dallas, TX 75201
Telephone: (214) 978-4000
Facsimile: (214) 978-4044

Kevin L. Burgess
McKool Smith, P.C.
300 W. Sixth Street, Suite 1700
Austin, TX 78701
Telephone: (512) 692-8700
Facsimile: (512) 692-8744

Counsel for Complainant
Nokia Technologies Oy

Amazon.com, Inc., Amazon.com Services LLC - Ex. 1016, Page 000071

CERTIFICATE OF SERVICE

I HEREBY CERTIFY that on this day, a true and correct copy of the foregoing document was served by the indicated means to the persons at the addresses below:

The Honorable Lisa R. Barton Secretary U.S. INTERNATIONAL TRADE COMMISSION 500 E Street, S.W., Room 112 Washington, DC 20436	**Via Electronic Filing (EDIS) and Hand Delivery (2 copies) by Noon the next Business Day**
Administrative Law Judge	
The Honorable Charles E. Bullock Chief Administrative Law Judge U.S. International Trade Commission 500 E Street, S.W., Room 317 Washington, DC 20436	**Via Hand Delivery and by email to: irina.kushner@usitc.gov**
Counsel for Office of Unfair Import Investigations	
Sarah J. Sladic, Esq. Office of Unfair Import Investigations U.S. International Trade Commission 500 E. Street, S.W., Suite 401 Washington. D.C. 20436	**Via email: Sarah.Sladic@usitc.gov**
Peter J. Sawert, Esq. Office of Unfair Import Investigations U.S. International Trade Commission 500 E. Street, S.W., Suite 401 Washington. D.C. 20436	**Via email to Peter.Sawert@usitc.gov**
Counsel for Respondent Apple Inc.	
Nina S. Tallon WILMER CUTLER PICKERING HALE AND DORR LLP 1875 Pennsylvania Ave., NW Washington, DC 20006 Telephone: (202) 663-6000	**Via email to WHApple-Nokia1038@WilmerHale.com**

Dated: May 2, 2017

/s/Emily S. Healy

Emily S. Healy