IPR2024-00806
IPR2024-00807

Apple Inc. v.
Resonant Systems, Inc.

U.S. Patent No. 9,941,830
U.S. Patent No. 8,860,337

Patent Owner's Demonstratives

Challenged Claims

’830 Patent:

US009941830B2

(12) **United States Patent**
Elenga et al.

(10) **Patent No.: US 9,941,830 B2**
(45) **Date of Patent: Apr. 10, 2018**

(54) **LINEAR VIBRATION MODULES AND LINEAR-RESONANT VIBRATION MODULES**

(71) Applicant: **Resonant Systems, Inc.**, Seattle, WA (US)

(72) Inventors: **Robin Elenga**, Seattle, WA (US); **Brian Marc Pepin**, Oakland, CA (US); **Glen Tompkins**, Woodinville, WA (US)

(73) Assignee: **Resonant Systems, Inc.**, Seattle, WA (US)

(*) Notice: Subject to any disclaimer, the term of this patent is extended or adjusted under 35 U.S.C. 154(b) by 0 days.

(21) Appl. No.: **15/181,249**

(22) Filed: **Jun. 13, 2016**

(65) **Prior Publication Data**

US 2016/0301346 A1 Oct. 13, 2016

Related U.S. Application Data

(63) Continuation of application No. 14/469,210, filed on Aug. 26, 2014, now Pat. No. 9,369,081, which is a continuation of application No. 13/345,607, filed on Jan. 6, 2012, now Pat. No. 8,860,337, which is a continuation-in-part of application No. 12/782,697, filed on May 18, 2010, now Pat. No. 8,093,767.

(60) Provisional application No. 61/179,109, filed on May 18, 2009.

(51) **Int. Cl.**
H02K 33/00 (2006.01)
H02P 25/032 (2016.01)
H02K 33/16 (2006.01)

(52) **U.S. Cl.**
CPC ***H02P 25/032*** (2016.02); ***H02K 33/16*** (2013.01)

(58) **Field of Classification Search**
CPC H02P 25/032; H02K 7/1876; B06B 1/166
See application file for complete search history.

(56) **References Cited**

U.S. PATENT DOCUMENTS

1,120,414	A	12/1914	Schoolfield et al.
3,728,654	A	4/1973	Tada
4,549,535	A	10/1985	Wing
4,692,999	A	9/1987	Frandsen
5,017,819	A	5/1991	Patt et al.
5,187,398	A	2/1993	Stuart et al.
5,231,336	A	7/1993	van Namen

(Continued)

FOREIGN PATENT DOCUMENTS

EP	1 376 833	A1	1/2004

Primary Examiner — Karen Masih
(74) *Attorney, Agent, or Firm* — Olympic Patent Works PLLC

(57) **ABSTRACT**

The current application is directed to various types of linear vibrational modules, including linear-resonant vibration modules that can be incorporated in a wide variety of appliances, devices, and systems to provide vibrational forces. The vibrational forces are produced by linear oscillation of a weight or member, in turn produced by rapidly alternating the polarity of one or more driving electromagnets. Feedback control is used to maintain the vibrational frequency of linear-resonant vibration module at or near the resonant frequency for the linear-resonant vibration module. Both linear vibration modules and linear-resonant vibration modules can be designed to produce vibrational amplitude/frequency combinations throughout a large region of amplitude/frequency space.

20 Claims, 20 Drawing Sheets

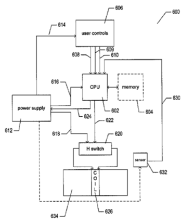

IPR2024-00806, Ex. 1001

1. A vibration module comprising:
a housing;
a moveable component;
a power supply;
user-input features;
a driving component that drives the moveable component to oscillate within the housing; and
a control component that controls supply of power from the power supply to the driving component to cause the moveable component to oscillate at a frequency and an amplitude specified by one or more stored values.

14. The vibration module of claim **1** further including flux paths comprising a paramagnetic material that is shaped and positioned to reduce the reluctance of one or more magnetic circuits within the vibration module.

Challenged Claims

’337 Patent:

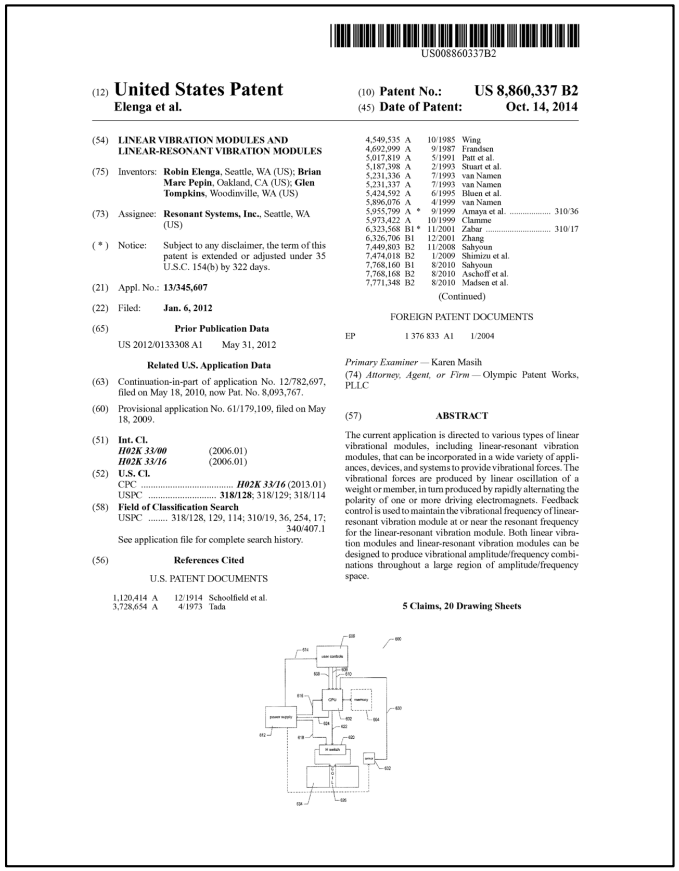

US008860337B2

(12) **United States Patent**
Elenga et al.

(10) **Patent No.: US 8,860,337 B2**
(45) **Date of Patent: Oct. 14, 2014**

(54) **LINEAR VIBRATION MODULES AND LINEAR-RESONANT VIBRATION MODULES**

(75) Inventors: **Robin Elenga**, Seattle, WA (US); **Brian Marc Pepin**, Oakland, CA (US); **Glen Tompkins**, Woodinville, WA (US)

(73) Assignee: **Resonant Systems, Inc.**, Seattle, WA (US)

(*) Notice: Subject to any disclaimer, the term of this patent is extended or adjusted under 35 U.S.C. 154(b) by 322 days.

(21) Appl. No.: **13/345,607**

(22) Filed: **Jan. 6, 2012**

(65) **Prior Publication Data**

US 2012/0133308 A1 May 31, 2012

Related U.S. Application Data

(63) Continuation-in-part of application No. 12/782,697, filed on May 18, 2010, now Pat. No. 8,093,767.

(60) Provisional application No. 61/179,109, filed on May 18, 2009.

(51) **Int. Cl.**
H02K 33/00 (2006.01)
H02K 33/16 (2006.01)

(52) **U.S. Cl.**
CPC ***H02K 33/16*** (2013.01)
USPC **318/128**; 318/129; 318/114

(58) **Field of Classification Search**
USPC 318/128, 129, 114; 310/19, 36, 254, 17; 340/407.1
See application file for complete search history.

(56) **References Cited**

U.S. PATENT DOCUMENTS

1,120,414 A	12/1914	Schoolfield et al.	
3,728,654 A	4/1973	Tada	
4,549,535 A	10/1985	Wing	
4,692,999 A	9/1987	Frandsen	
5,017,819 A	5/1991	Putt et al.	
5,187,398 A	2/1993	Stuart et al.	
5,231,336 A	7/1993	van Namen	
5,231,337 A	7/1993	van Namen	
5,424,592 A	6/1995	Blisen et al.	
5,896,076 A	4/1999	van Namen	
5,955,799 A *	9/1999	Amaya et al.	310/36
5,973,422 A	10/1999	Clamme	
6,323,568 B1 *	11/2001	Zabar	310/17
6,326,706 B1	12/2001	Zhang	
7,449,803 B2	11/2008	Sahyoun	
7,474,018 B2	1/2009	Shimizu et al.	
7,768,160 B1	8/2010	Sahyoun	
7,768,168 B2	8/2010	Aschoff et al.	
7,771,348 B2	8/2010	Madsen et al.	

(Continued)

FOREIGN PATENT DOCUMENTS

EP 1 376 833 A1 1/2004

Primary Examiner — Karen Masih
(74) *Attorney, Agent, or Firm* — Olympic Patent Works, PLLC

(57) **ABSTRACT**

The current application is directed to various types of linear vibrational modules, including linear-resonant vibration modules, that can be incorporated in a wide variety of appliances, devices, and systems to provide vibrational forces. The vibrational forces are produced by linear oscillation of a weight or member, in turn produced by rapidly alternating the polarity of one or more driving electromagnets. Feedback control is used to maintain the vibrational frequency of linear-resonant vibration module at or near the resonant frequency for the linear-resonant vibration module. Both linear vibration modules and linear-resonant vibration modules can be designed to produce vibrational amplitude/frequency combinations throughout a large region of amplitude/frequency space.

5 Claims, 20 Drawing Sheets

IPR2024-00807, Ex. 1001

2. A linear vibration module comprising:
a housing;
a moveable component;
a power supply;
user-input features;
a driving component that drives the moveable component in each of two opposite directions within the housing; and
a control component that controls supply of power from the power supply to the driving component to cause the moveable component to oscillate at a frequency and an amplitude specified by user input received from the user-input features,
wherein the control component drives simultaneous oscillation of the moveable component at two or more frequencies to generate complex vibration modes.

3. The linear vibration module of claim **2** wherein the complex vibration modes include:
a primary oscillation frequency modulated by a modulating oscillation frequency;
a beat frequency; and
an aperiodic oscillation waveform.

Claim Construction

“driving component…” (’830 and ’337 patents)

Board’s construction of “driving component”

Function:
drives the moveable component to oscillate within the housing

Corresponding structure:
a coil of conductive wire 420” (Figures 4A–4G); “coil 514” (Figures 5A–5B); “coil 626” (Figure 6); “electromagnet” (Figures 10-11); “additional coils 1202 and 1204” (Figure 12); “coils 1302 and 1304” (Figure 13); “driving coils 1412 and 1414” (Figure 14); “coil 1510” (Figures 15–17); “stator coils” (Figures 24A-25)

Board adopted Petitioner’s proposed construction. Patent Owner does not believe this term requires construction to resolve either IPR.

IPR2024-00806, ID 12–13, Pet. 6–7, POR 7
IPR2024-00807, ID 12, Pet. 5–6, POR 7

“control component…” (’830 and ’337 patents)

District Court construction of “control component”

Function (’830 and ’337 patents):
controlling supply of power from the power supply to the driving component to cause the moveable component to oscillate at a frequency and an amplitude specified by specified by one or more stored values

Corresponding structure (’830 patent):
a microcontroller, a processor, a microprocessor, or a CPU that performs the algorithm shown in Steps 706 through 716 in Figure 7A, with reference to all steps shown in Figure 7B other than Step 734 and all steps shown in Figure 7C, or the algorithm described in the corresponding text, See, e.g., 7:20–7:34, 7:42–7:52, 7:60–8:40, and equivalents thereof.

Corresponding structure (’337 patent):
a microcontroller, a processor, a microprocessor, or a CPU that performs the algorithm shown in Steps 706 through 716 in Figure 7A, with reference to the steps shown in Figures 7B and 7C, or the algorithm described in the corresponding text, See, e.g. 7:10–7:24, 7:32–8:30 and/or equivalents thereof.

IPR2024-00806, ID 13
IPR2024-00807, ID 13

"control component…" ('830 and '337 patents)

Board's construction of "control component" (both patents)

"As elaborated below, our reading of the ['830/'337] patent is in accord with the District Court's construction, and we adopt it for purposes of this Decision."

"In summary, the corresponding structure of the 'control component' under a means plus function interpretation that relies upon a microprocessor (and memory) as corresponding structure further requires algorithmic structure at least for 1) operating a timer or its equivalent to flip the polarity of a control value periodically corresponding to a user-selected frequency and input the control value to an H-bridge switch circuit to change the direction of the current through the coil as supplied by the power supply, and 2) computing an output value corresponding to a user-selected amplitude of oscillation and outputting the value to the claimed power supply so that the power supply outputs an appropriate current amplitude to a coil."

IPR2024-00806, ID 13, 20
IPR2024-00807, ID 13, 20

“control component…” (’830 and ’337 patents)

Petition’s construction of “control component” (both patents)

This Petition treats “control component” in [challenged claims] as including one of the switches shown in Figures 5A-6 and described at [5:52-6:5, 6:9-16], and the processor (also referred to as microprocessor, microcontroller, or CPU) that performs the algorithm shown in Figures 7A-7C and described at [6:52-8:40].

Reply does not argue for a construction different from that in the Board’s institution decision

IPR2024-00806, Pet. 4–5, POR 8–9, Reply 8–9
IPR2024-00807, Pet. 4, POR 8–10, Reply 16–17

"control component…" ('830 and '337 patents)

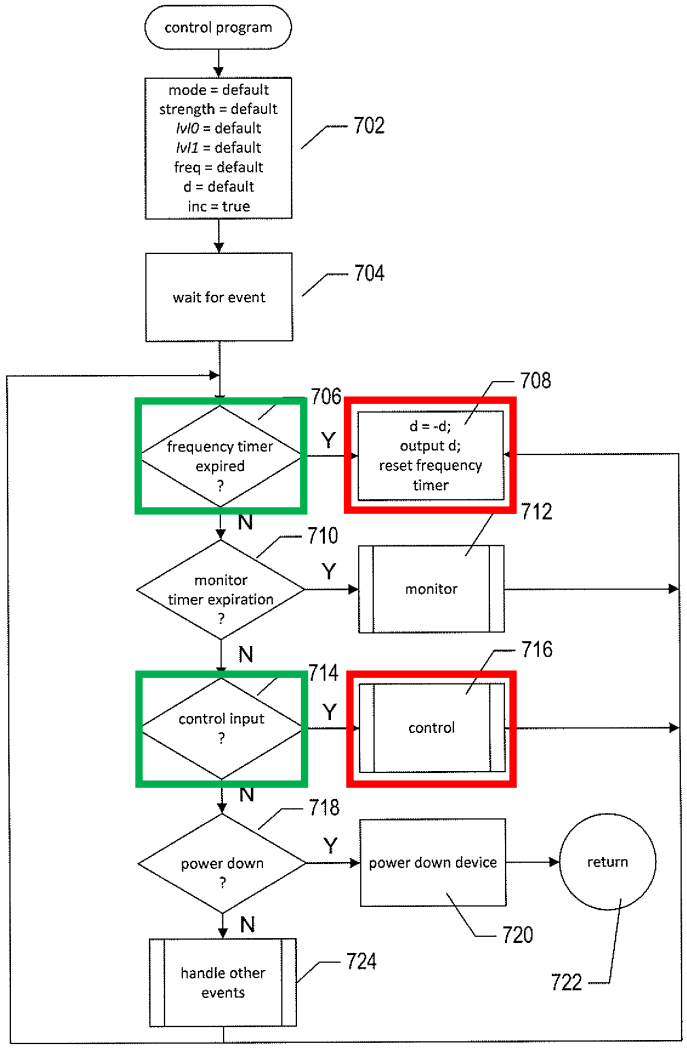

FIG. 7A

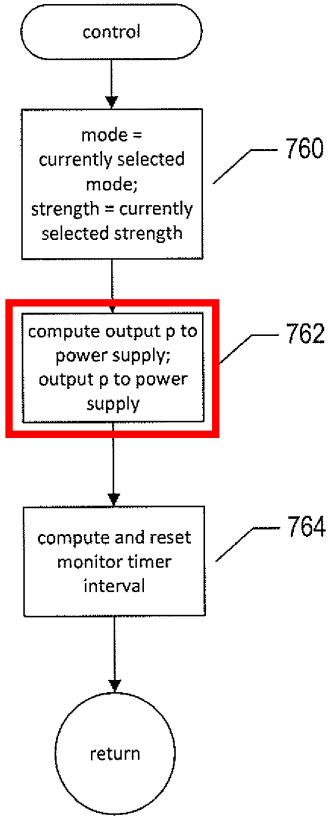

FIG. 7C

IPR2024-00806, Ex. 1001, Figs. 7A, 7C, POR 8, 20, Sur-reply 3–4
IPR2024-00807, Ex. 1001, Figs. 7A, 7C, POR 8–9, 27, Sur-reply 3–4

“control component…” (’830 and ’337 patents)

Board’s construction of “control component” (both patents)

“As elaborated below, our reading of the [’830/’337] patent is in accord with the District Court’s construction, and we adopt it for purposes of this Decision.”

“In summary, the corresponding structure of the ‘control component’ under a means plus function interpretation that relies upon a microprocessor (and memory) as corresponding structure further requires algorithmic structure at least for 1) operating a timer or its equivalent to flip the polarity of a control value periodically corresponding to a user-selected frequency and input the control value to an H-bridge switch circuit to change the direction of the current through the coil as supplied by the power supply, and 2) computing an output value corresponding to a user-selected amplitude of oscillation and outputting the value to the claimed power supply so that the power supply outputs an appropriate current amplitude to a coil.”

IPR2024-00806, ID 13, 20
IPR2024-00807, ID 13, 20

IPR2024-00806 ’830 Patent Grounds 1A-1F

IPR2024-00806, Grounds 1A-1F

- The grounds are all based upon constructions for "control component" that neither Petitioner nor Patent Owner have advanced in this proceeding.
- The Institution Decision was based upon Grounds 2A-2C. With respect to Grounds 1A-1F, the Board stated "those grounds are based on assumed "plain and ordinary meaning" interpretations of the claims that we do not adopt. . . . Therefore, we do not consider those grounds of Petitioner's challenge . . ."
- The Reply does not address Grounds 1A-1F at all.
- These Grounds should be rejected.

IPR2024-00806, Pet. 16–19, ID 21, Sur-Reply 2

IPR2024-00806 ’830 Patent Grounds 2A-2C

IPR2024-00806, Grounds 2A–2C

- Grounds 2A–C are purportedly based upon Apple's construction of "control component."
- But Petition failed to provide a full step-by-step mapping that included steps 708 and 762 the context of the full algorithm

IPR2024-00806, Sur-Reply 3–5

IPR2024-00806, Grounds 2A–2C

Reply adds a new argument, based upon Gregorio drive signal 504:

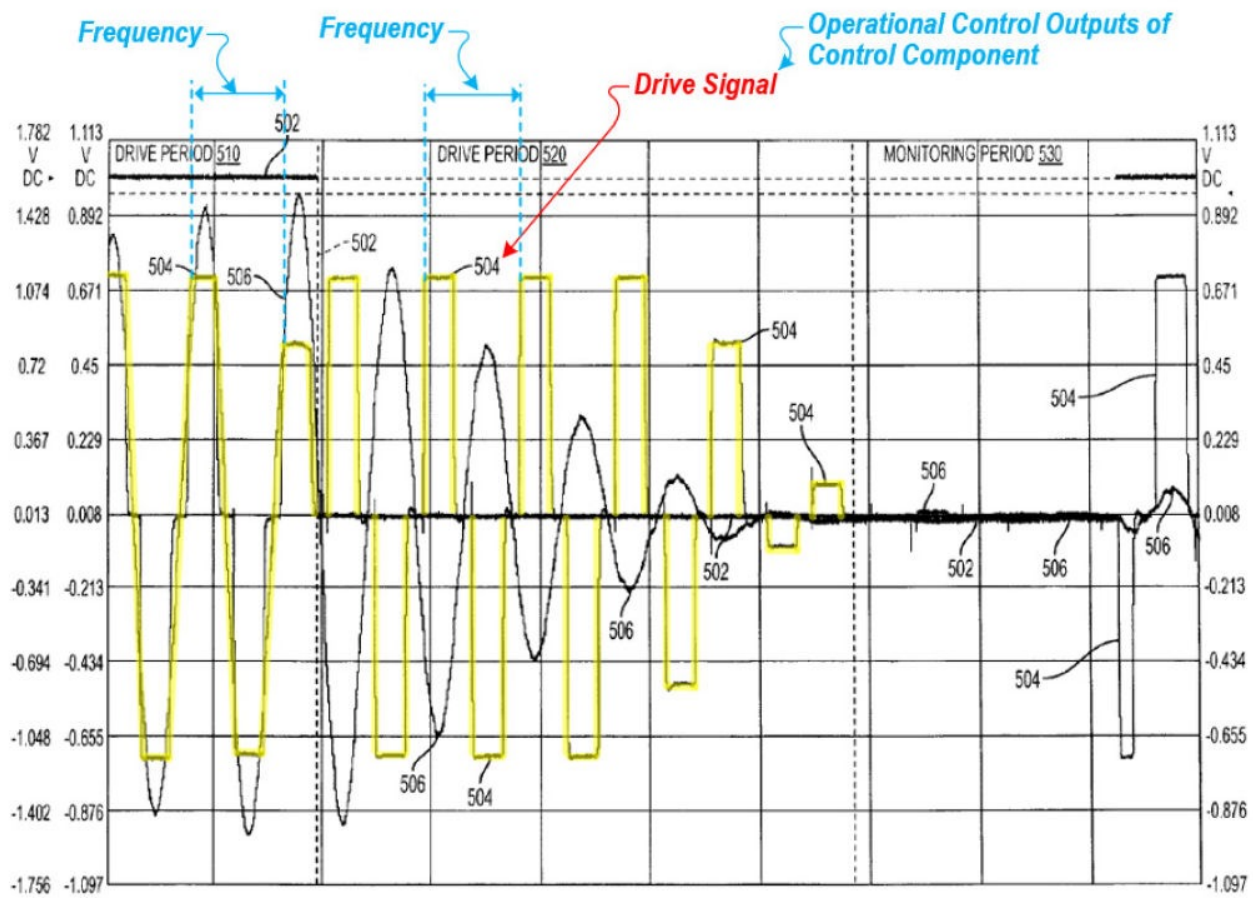

IPR2024-00806, Reply 6–7, Sur-Reply 6

IPR2024-00806, Grounds 2A–2C

"35 U.S.C. § 312(a)(3) [requires] IPR petitions to identify 'with particularity ... the evidence that supports the grounds for the challenge to each claim'"

> *Harmonic Inc. v. Avid Tech., Inc.*, 815 F.3d 1356, 1363 (Fed. Cir. 2016)

"We see no error in the Board's rejection of Ariosa's reliance, in its Reply submissions, on previously unidentified portions of a prior-art reference to make a meaningfully distinct contention."

> *Ariosa Diagnostics v. Verinata Health, Inc.*, 805 F.3d 1359, 1367 (Fed. Cir. 2015)

"[Petitioner] waited until its reply to present what in substance is an argument that it would have been obvious to a relevant artisan to modify [prior art]. This argument was a 'meaningfully distinct contention' . . . . We thus see no abuse of discretion in the Board's decision not to consider the new argument."

> *Yita LLC v. MacNeil IP LLC*, 69 F.4th 1356, 1367 (Fed. Cir. 2023)

IPR2024-00806, Sur-Reply 6–7

IPR2024-00806, Grounds 2A–2C

Even if this untimely theory were considered, drive signal 504 is a single signal. Nowhere does Gregario teach separately outputting d and p signals at separate steps of the algorithm as required by the means-plus-function corresponding structures proposed by Apple's or the Board's constructions.

IPR2024-00806, Sur-Reply 7

IPR2024-00806
’830 Patent
Claim 14

IPR2024-00806, Claim 14

Claim 14 theories (grounds 1B, 1E, 2B) are based upon using aluminum as the "magnetic substance" of Wakuda's casing:

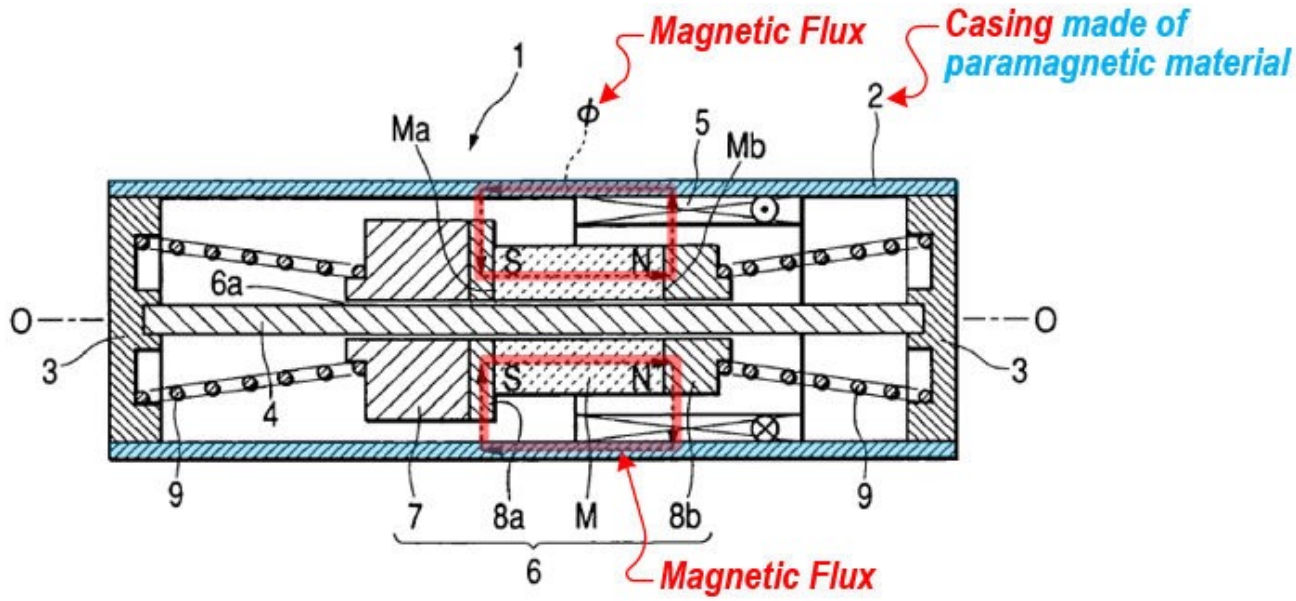

The vibration generating means **1** shown in FIG. **1** comprises a cylindrical-shaped casing **2** made of a magnetic substance as a support, and covers **3**, **3** made of a non-magnetic substance and being mountable on both ends of the

IPR2024-00806, Pet. 32, Ex. 1005, 4:34–36, Fig. 1B, POR 22

IPR2024-00806, Claim 14

Claim 14 theories (grounds 1B, 1E, 2B) are based upon using aluminum as the "magnetic substance" of Wakuda's casing:

- "Several reasons would have motivated a POSITA to implement the casing of Gregorio-Wakuda's LRA using a paramagnetic material (e.g., aluminum)."
- "Further, well-known paramagnetic materials (e.g., aluminum) were lighter than other popular magnetic materials like iron and steel, making it a superior choice . . . ."
- "Moreover, paramagnetic materials (e.g., aluminum) were well-known to be naturally resistant to rust and corrosion . . . ."
- "Additionally, paramagnetic materials (e.g., aluminum) were excellent conductors of electricity and heat . . . ."

IPR2024-00806, Pet. 33–34

IPR2024-00806, Claim 14

Prof. Keith Goossen
Patent Owner's Expert

139. As this figure is drawn, showing strong bending of the magnetic field lines into the casing, it is clearly represented as ferromagnetic, as discussed above. A paramagnetic material would not so strongly bend the lines. Furthermore Wakuda states that the casing forms the magnetic circuit, and thus must bend and guide the magnetic field lines[116]:

140. Thus replacing the casing with a paramagnetic material would result in the device not working, according to Wakuda's design.

IPR2024-00806, POR 26–27, Ex. 2009, ¶¶ 139–140

IPR2024-00806, Claim 14

Prof. Keith Goossen
Patent Owner's Expert

143. As this explains, a permeability substantially greater than 1 (i.e., in the thousands) is needed to confine the flux, like what is illustrated in McLyman Figure 1-11 or Wakuda Figure 1B. To understand where the properties of aluminum place it in this discussion from McLyman, we can determine its permeability. In the CGS units used in McLyman, the permeability can be written in terms of susceptibility κ[121]:

$$\frac{B}{H} = 1 + 4\pi\kappa$$

IPR2024-00806, POR 28, Ex. 2009, ¶ 143

IPR2024-00806, Claim 14

Prof. Keith Goossen
Patent Owner's Expert

144. The CGS susceptibility of solid aluminum is 16.5×10^{-6}, making the permeability $1+4\pi\kappa$ approximately 1.000022,[122] and making it one of the "non-magnetic materials" with "permeabilities of the same order" as 1.0, according to McLyman.[123] Importantly, the magnetization due to paramagnetism in aluminum will only alter the magnetic B field by around 0.002% of the value that field would have in a vacuum. A POSITA would recognize that such a weak effect would not alter the magnetic flux lines from McLyman Figure 1-10 to be concentrated as in McLyman Figure 1-11, and it would not produce the magnetic flux paths confined to the magnetic material as shown in Wakuda Figure 1B.

145. A POSITA seeking to apply the teachings of Wakuda Figure 1B would not be motivated to use a paramagnetic material such as aluminum in place of the magnetic material taught by Wakuda. Accordingly, the combination of Gregario with Wakuda does not render

IPR2024-00806, POR 28–29, Ex. 2009, ¶¶ 134–145

IPR2024-00806, Claim 14

Apple's own evidence:

First, a technical point. **All materials are magentic** in the sense that they are affected in some way. However, the extent to which they are affected varies widely. There are

Diamagnetism results from the the effects of magnetic fields on all of the ele Thus, **all materials are diamagnetic**. However, the other forms of magnetism diamagnetism can usually be ignored unless it is the only magnetism present.

no surprise that **most applications of magnetic materials call for ferromagnetic materials**. t interact most strongly with magnetic fields. Within this category there are several import

IPR2024-00806, Ex. 1032, POR 22

IPR2024-00806, Claim 14

Apple's own evidence:

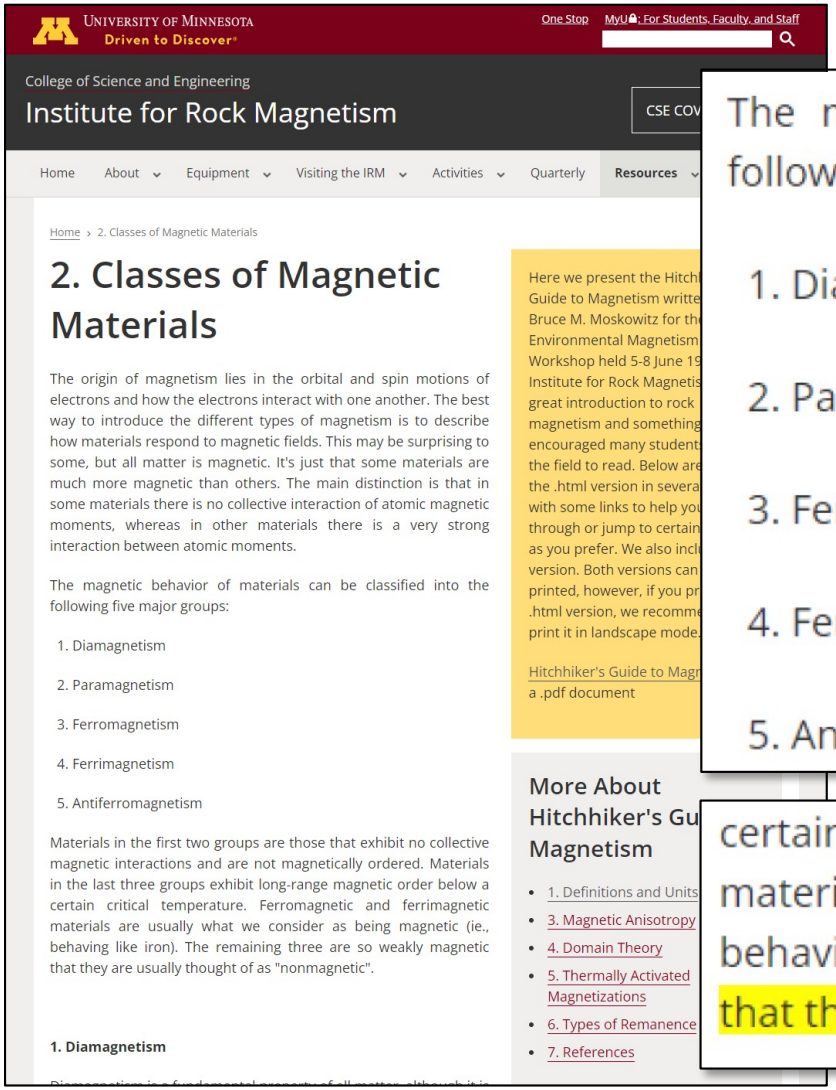

The magnetic behavior of materials can be classified into the following five major groups:

1. Diamagnetism
2. Paramagnetism
3. Ferromagnetism
4. Ferrimagnetism
5. Antiferromagnetism

certain critical temperature. Ferromagnetic and ferrimagnetic materials are usually what we consider as being magnetic (ie., behaving like iron). The remaining three are so weakly magnetic that they are usually thought of as "nonmagnetic".

IPR2024-00806, Ex. 1037, POR 22–23

IPR2024-00806, Claim 14

Apple's own evidence:

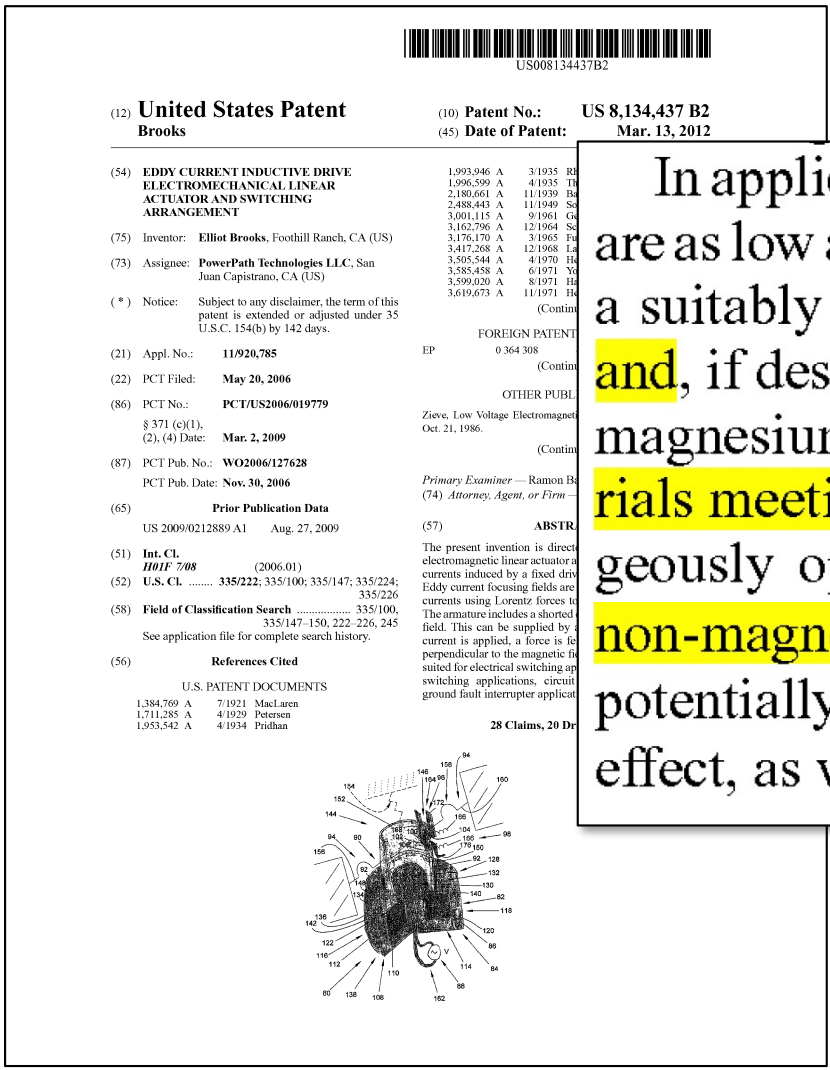

US008134437B2

(12) **United States Patent**
Brooks

(10) **Patent No.: US 8,134,437 B2**
(45) **Date of Patent: Mar. 13, 2012**

(54) **EDDY CURRENT INDUCTIVE DRIVE ELECTROMECHANICAL LINEAR ACTUATOR AND SWITCHING ARRANGEMENT**

(75) Inventor: **Elliot Brooks**, Foothill Ranch, CA (US)

(73) Assignee: **PowerPath Technologies LLC**, San Juan Capistrano, CA (US)

(*) Notice: Subject to any disclaimer, the term of this patent is extended or adjusted under 35 U.S.C. 154(b) by 142 days.

(21) Appl. No.: **11/920,785**

(22) PCT Filed: **May 20, 2006**

(86) PCT No.: **PCT/US2006/019779**
§ 371 (c)(1), (2), (4) Date: **Mar. 2, 2009**

(87) PCT Pub. No.: **WO2006/127628**
PCT Pub. Date: **Nov. 30, 2006**

(65) **Prior Publication Data**
US 2009/0212889 A1 Aug. 27, 2009

(51) **Int. Cl.**
H01F 7/08 (2006.01)

(52) **U.S. Cl.** **335/222**; 335/100; 335/147; 335/224; 335/226

(58) **Field of Classification Search** 335/100, 335/147–150, 222–226, 245
See application file for complete search history.

(56) **References Cited**

U.S. PATENT DOCUMENTS

1,384,769	A	7/1921	MacLaren
1,711,285	A	4/1929	Petersen
1,953,542	A	4/1934	Pridhan
1,993,946	A	3/1935	Rl
1,996,599	A	4/1935	Th
2,180,661	A	11/1939	Ba
2,488,443	A	11/1949	So
3,001,115	A	9/1961	Ge
3,162,796	A	12/1964	Sc
3,176,170	A	3/1965	Fu
3,417,268	A	12/1968	La
3,505,544	A	4/1970	He
3,585,458	A	6/1971	Yo
3,599,020	A	8/1971	Ha
3,619,673	A	11/1971	Ha

(Contint

FOREIGN PATENT

EP 0 364 308

(Contint

OTHER PUBL

Zieve, Low Voltage Electromagnet
Oct. 21, 1986.

(Contint

Primary Examiner — Ramon Ba
(74) *Attorney, Agent, or Firm* —

(57) **ABSTR**

The present invention is direct
electromagnetic linear actuator a
currents induced by a fixed driv
Eddy current focusing fields are
currents using Lorentz forces to
The armature includes a shorted
field. This can be supplied by a
current is applied, a force is fe
perpendicular to the magnetic fi
suited for electrical switching ap
switching applications, circuit
ground fault interrupter applicat

28 Claims, 20 Dr

In applications where it is desired to ensure actuation times are as low as possible, the piston **92** is made of material having a suitably high ratio that is also non-magnetic, non-ferrous and, if desired, can be paramagnetic. Aluminum, copper and magnesium and alloys thereof are examples of suitable materials meeting these requirements. Actuation time is advantageously optimized because a piston **92** made of a such a non-magnetic, non-ferrous material is not susceptible to any potentially acceleration reducing self-induction or solenoid effect, as would likely be the case if it were ferromagnetic.

IPR2024-00806, Ex. 1031, POR 23–24

IPR2024-00807
’337 Patent
Grounds 1 and 2

IPR2024-00807, Grounds 1 and 2

- Ground 1 based upon constructions for “control component” that neither Petitioner nor Patent Owner have advanced in this proceeding.
- Neither Petition nor Reply attempted to show all steps of Board’s “control component” construction satisfied.
- Ground 1 should be rejected.

IPR2024-00807, Pet. 17–19, Sur-Reply 4–5

IPR2024-00807, Grounds 1 and 2

In Reply, Petitioner identifies Wakuda "Drive Signal S1" as ***both*** the directional output d (to H bridge) and the output p (to power supply):

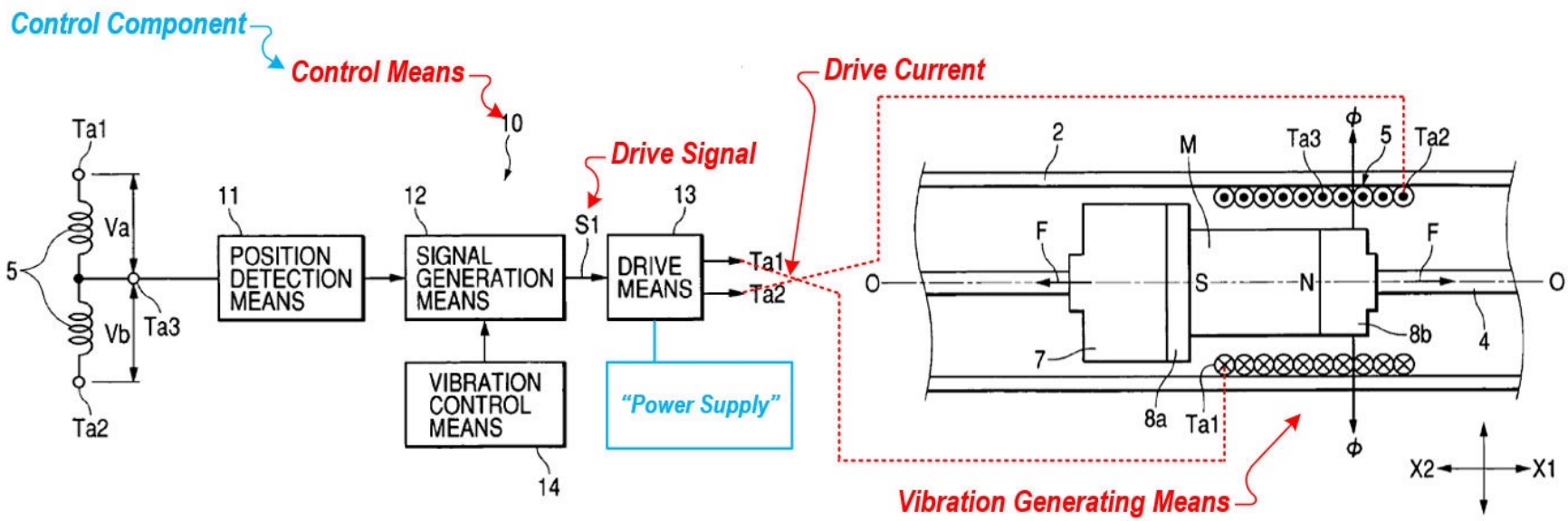

IPR2024-00807, Reply 3, 8–9, Sur-Reply 4–5, 8–10

IPR2024-00807, Grounds 1 and 2

FIG. 4

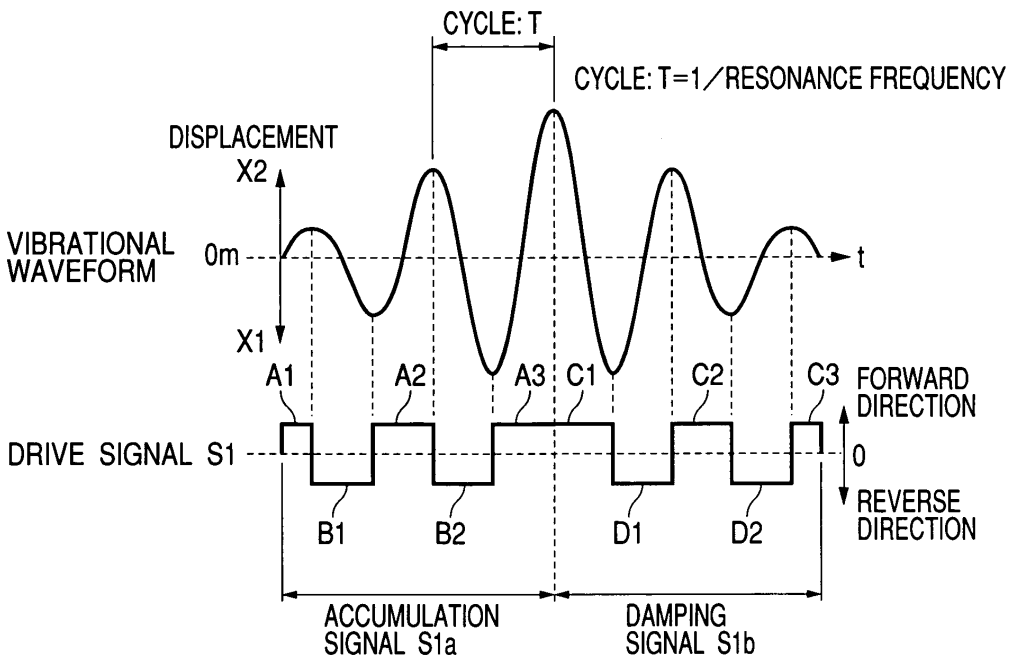

FIG. **4** shows a waveform of a drive signal **S1**. In the embodiment, while the drive signal **S1** is given to the coil **5** as a rectangular wave, the drive signal **S1** may have a waveform such as a triangular wave or the like. In FIG. **4**, a middle point of the drive signal **S1** is indicated by "0", and

IPR2024-00807, Ex. 1005, 6:63–67, Fig. 4, Reply 6–7, Sur-Reply 5

IPR2024-00807, Grounds 1 and 2

Even assuming these drive signal S1 embodiment could control both the H-bridge and power supply, Wakuda does not teach separately outputting d and p signals at separate steps of the "control component" algorithm as required by Apple's or the Board's constructions.

IPR2024-00807, POR 19–22, Sur-Reply 5–6

IPR2024-00807
’337 Patent
Grounds 3A–B, 4A–B

IPR2024-00807, Grounds 3A–B and 4A–B

- Grounds 3A–B based upon constructions for “control component” that neither Petitioner nor Patent Owner have advanced in this proceeding.
- Neither Petition nor Reply attempted to show all steps of Board’s “control component” construction satisfied.
- Grounds 3A–B should be rejected.

IPR2024-00807, Pet. 62–64, Sur-Reply 7–8

IPR2024-00807, Grounds 3A–B and 4A–B

- Grounds 4A–B are purportedly based upon Apple's construction of "control component."
- But Petition failed to provide any step-by-step mapping of Gregorio combination at all:

> Given the similarity between Gregorio-Ramsay-Wakuda-Rossi-Aldrich's system (§IV.E.1.(b)) and Wakuda-Ramsay-Rossi-Aldrich's system (§IV.B.3.(b)), the analysis of Ground 2 ([1f], [2f]-[2g], [4f]) based on Rossi, Aldrich, and supporting evidence similarly applies for Gregorio-Ramsay-Wakuda-Rossi-Aldrich. APPLE-1003, [289]-[321], [324]-[327], [329].

- Grounds 4A–B should be rejected.

IPR2024-00807, Pet. 75–80, Sur-Reply 7–8

IPR2024-00807, Grounds 3A–B and 4A–B

Reply adds a new argument, based upon Gregorio drive signal 504:

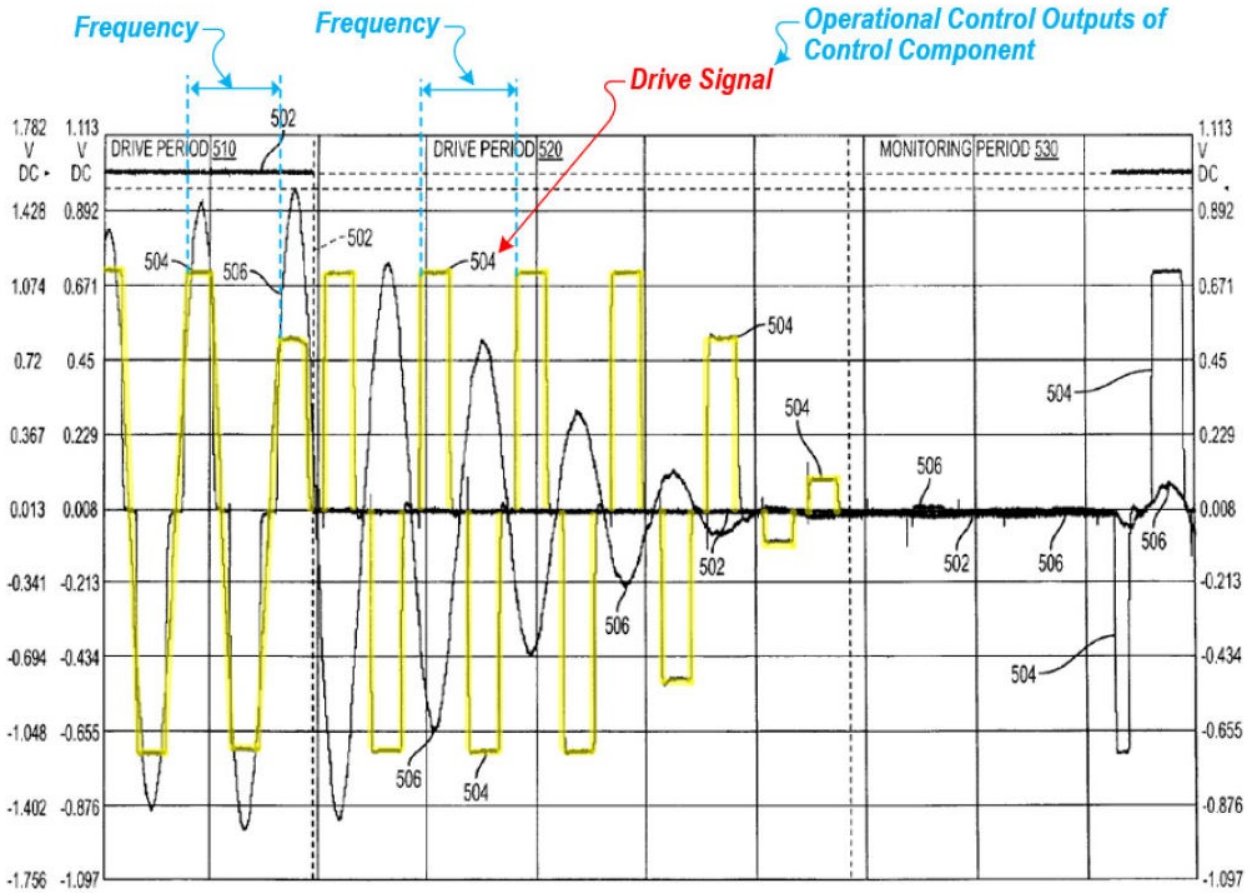

IPR2024-00807, Reply 15, Sur-Reply 10

IPR2024-00807, Grounds 3A–B and 4A–B

"35 U.S.C. § 312(a)(3) [requires] IPR petitions to identify 'with particularity ... the evidence that supports the grounds for the challenge to each claim'"

> *Harmonic Inc. v. Avid Tech., Inc.*, 815 F.3d 1356, 1363 (Fed. Cir. 2016)

"We see no error in the Board's rejection of Ariosa's reliance, in its Reply submissions, on previously unidentified portions of a prior-art reference to make a meaningfully distinct contention."

> *Ariosa Diagnostics v. Verinata Health, Inc.*, 805 F.3d 1359, 1367 (Fed. Cir. 2015)

"[Petitioner] waited until its reply to present what in substance is an argument that it would have been obvious to a relevant artisan to modify [prior art]. This argument was a 'meaningfully distinct contention' . . . . We thus see no abuse of discretion in the Board's decision not to consider the new argument."

> *Yita LLC v. MacNeil IP LLC*, 69 F.4th 1356, 1367 (Fed. Cir. 2023)

IPR2024-00807, Sur-Reply 9–10

IPR2024-00807, Grounds 3A–B and 4A–B

Even if this untimely theory were considered, drive signal 504 is a single signal. Nowhere does Gregario teach separately outputting d and p signals at separate steps of the algorithm as required by the means-plus-function corresponding structures proposed by Apple's or the Board's constructions.

IPR2024-00807, Sur-Reply 10