IN THE UNITED STATES PATENT AND TRADEMARK OFFICE

In re Patent of:	Elenga et al.	
U.S. Patent No.:	8,860,337	Attorney Docket No. 50095-0178IP1
Issue Date:	October 14, 2014	
Appl. Serial No.:	13/345,607	
Filing Date:	January 6, 2012	
Title:	LINEAR VIBRATION MODULES AND LINEAR-RESONANT VIBRATION MODULES	

DECLARATION OF DR. BLAKE HANNAFORD

I hereby declare that all statements made of my own knowledge are true and that all statements made on information and belief are believed to be true. I further declare that these statements were made with the knowledge that willful false statements and the like so made are punishable by fine or imprisonment, or both, under Section 1001 of the Title 18 of the United States Code.

Dated: 12-Apr-2024 By: _____

Blake Hannaford, Ph.D.

TABLE OF CONTENTS

I. ASSIGNMENT 5

II. QUALIFICATIONS AND BACKGROUND INFORMATION 5

III. LEGAL PRINCIPLES 9

- A. Anticipation 9
- B. Obviousness 10
- C. Claim Construction 12

IV. PERSON OF ORDINARY SKILL IN THE ART 16

V. MATERIALS CONSIDERED 17

VI. OVERVIEW OF THE ’337 PATENT 24

- A. Summary of the ’337 Patent 24
- B. Prosecution History of the ’337 Patent 30

VII. OVERVIEW OF THE CITED REFERENCES 37

- A. Overview of Gregorio 37
- B. Overview of Wakuda 40
- C. Overview of Ramsay 43
- D. Overview of Tierling 46
- E. Overview of Rossi 48
- F. Overview of Aldrich 50
- G. Overview of Motohashi 51
- H. Overview of Amaya 53

VIII. GROUND 1: The Wakuda-Ramsay Combination Renders Obvious Claims 1-4 (Plain-and-Ordinary Meaning and Patent Owner’s Means-Plus-Function Construction) 56

- A. The Predictable Combination of Wakuda and Ramsay 57

B. Analysis Of Wakuda-Ramsay With Respect To Claims 1-4, 7, 8, 14, 15, 17, 19, and 20 61

IX. GROUND 2: The Wakuda-Ramsay-Rossi-Aldrich Combination Renders Obvious Claims 1-4 (Both Parties' Means-Plus-Function Constructions) ...87

A. The Predictable Combination of Wakuda-Ramsay and Rossi 87

B. The Predictable Combination of Wakuda-Ramsay-Rossi and Aldrich 91

C. Analysis of Wakuda-Ramsay-Rossi-Aldrich With Respect To Claims 1-4 97

X. GROUND 3A: The Gregorio-Ramsay-Wakuda Combination Renders Obvious Claims 1, 2, and 4 (Plain-and-Ordinary Meaning and Patent Owner's Means-Plus-Function Construction) 121

A. The Predictable Combination of Gregorio and Ramsay 121

B. The Predictable Combination of Gregorio-Ramsay and Wakuda 126

C. Analysis of Gregorio-Ramsay-Wakuda With Respect to Claims 1, 2, and 4 130

XI. GROUND 3B: The Gregorio-Ramsay-Tierling Combination Renders Obvious Claims 2, 3, and 4 (Plain-and-Ordinary Meaning and Patent Owner's Means-Plus-Function Construction) 157

A. The Predictable Combination of Gregorio-Ramsay and Tierling.....157

B. Analysis of Gregorio-Ramsay-Tierling With Respect to Claims 2, 3, and 4 160

XII. GROUND 4A: Gregorio-Ramsay-Wakuda-Rossi-Aldrich Renders Obvious Claims 1, 2, and 4 (Both Parties' Means-Plus-Function Constructions) 166

A. The Predictable Combination of Gregorio-Ramsay-Wakuda and Rossi 167

B. The Predictable Combination of Gregorio-Ramsay-Rossi and Aldrich 170
C. Analysis of Gregorio-Ramsay-Wakuda-Rossi-Aldrich with respect to Claims 1, 2, and 4 178
XIII. GROUND 4B: Gregorio-Ramsay-Tierling-Rossi-Aldrich Renders Obvious Claims 2, 3, and 4 (Both Parties' Means-Plus-Function Constructions) 204
XIV. CONCLUSION.....205

I, Dr. Blake Hannaford, declare that:

I. ASSIGNMENT

1. I have been retained as a technical expert by counsel on behalf of Apple ("Apple" or "Petitioner"). I understand that Apple is requesting that the Patent Trial and Appeal Board ("PTAB" or "Board") institute an *inter partes* review ("IPR") proceeding of U.S. Patent No. 8,860,337 ("the '337 patent") (APPLE-1001). I have been asked to provide my independent analysis of the '337 patent in light of the prior art publications cited below.

2. I received no compensation for this declaration beyond my normal hourly compensation based on my time actually spent analyzing the '337 patent, the prior art publications cited below, and the issues related thereto, and I will not receive any added compensation based on the outcome of any IPR or other proceeding involving the '337 patent.

II. QUALIFICATIONS AND BACKGROUND INFORMATION

3. In this section, I summarize my educational background, career history, and other qualifications relevant to this matter. I include a current version of my curriculum vitae as Appendix A.

4. I received a B.S. in Engineering and Applied Science from Yale University in 1977. I received an M.S. in Electrical Engineering and Computer Science from the University of California, Berkeley in 1982. I received a Ph.D. in

Electrical Engineering and Computer Science from the University of California, Berkeley in 1985.

5. I am a Professor in the Department of Electrical Engineering at the University of Washington. I also hold appointments as an Adjunct Professor of Bioengineering, an Adjunct Professor of Mechanical Engineering, and an Adjunct Professor of Surgery at the University of Washington. I have been a member of the faculty at the University of Washington for approximately 32 years.

6. During my teaching career, I have taught and performed research in the general areas of embedded computing, controls, robotics, human computer interfaces, and applications of these technologies, including to surgical telerobotics. I have taught over fifty course offerings at the undergraduate and graduate levels, including courses related to consumer electronics design, control systems, embedded and real-time software design, and haptic enabled systems. I have been an advisor for numerous graduate research projects including sensing in mobile devices, position sensors, the application of accelerometers to human carried devices, and sensors for multi-finger haptics.

7. I have published extensively over my career including numerous peer-reviewed and cited publications and papers. I have also contributed to books as an author and an editor. These publications are listed in my CV. I am named as an

inventor on about 30 U.S. patents, including multiple patents related to haptic interfaces and a pen-based input device.

8. I have many highly cited publications in the area of haptic interfaces and their use by human users. For example, my co-authored paper Hannaford, Blake and Jee-Hwan Ryu, *Time-domain passivity control of haptic interfaces*, IEEE TRANSACTIONS ON ROBOTICS AND AUTOMATION 18, 1 (2002) has 871 citations on Google Scholar. Another paper Brittany Redmond, Rachel Aina, Tejaswi Gorti, and Blake Hannaford. "*Haptic characteristics of some activities of daily living,*" in IEEE HAPTICS SYMPOSIUM at 71-76 (2010) measured force and torque recordings of several tasks including writing with pen and pencil, opening and closing a jar, and dialing and texting with a cell phone.

9. The paper Jacob Rosen, Mark MacFarlane, Christina Richards, Blake Hannaford, and Mika Sinanan, *Surgeon-tool force/torque signatures-evaluation of surgical skills in minimally invasive surgery*, in MEDICINE MEETS VIRTUAL REALITY at 290-296 IOS Press (1999) describes forces measured during animal surgeries by both expert and novice surgeons during training. In Jacob Rosen, Jeffrey D. Brown, Lily Chang, Marco Barreca, Mika Sinanan, and Blake Hannaford, *The BlueDRAGON-a system for measuring the kinematics and dynamics of minimally invasive surgical tools in-vivo*, in PROCEEDINGS 2002 IEEE INTERNATIONAL CONFERENCE ON ROBOTICS AND AUTOMATION (Cat. No. 02CH37292), vol.2, at

1876-1881 (2002), we describe a system for measuring force and movement of surgical instruments in 6 directions simultaneously for collecting data on surgical skill.

10. With my student Nancy Greivell, I studied application of ferrofluids to fluid pumps, reported in Nancy E. Greivell and Blake Hannaford, *The design of a ferrofluid magnetic pipette*, IEEE TRANSACTIONS ON BIOMEDICAL ENGINEERING 44, no. 3, 129-135 (1997).

11. In addition to my extensive academic research and teaching experience, I have also engaged in the industry. Since 1986, I have been involved in the research and design of devices that improve the interaction between humans and computer systems including robotics and control devices. While a Supervisor at the Jet Propulsion Laboratory at Caltech, I gained a deep understanding and developed expertise in Man-Machine Systems and human factors engineering in computer-based systems. Since that time, I have expanded my involvement with human computer interfaces to include research, teaching, and design in the areas of human-computer interfaces and embedded computing. In 2014-15 I worked for Google-X as it created a new Alphabet company Verily. While there I worked, among other things, on haptic interfaces for surgical robots, and evaluated similar technologies from other companies.

12. I have patented several haptic devices or control methods including US 9,104,271B1, US RE375281E1, US 5,642,469, US 7,027,965B2, US 6,437,770.

13. A detailed list of my other professional activities, memberships, and speaking engagements is included in my CV, which is attached as Appendix A.

14. Based on my experience and education, I believe that I am qualified to opine as to the knowledge and level of skill of one of ordinary skill in the art at the time of the alleged invention of the ’337 patent (which I further describe below) and what such a person would have understood at that time, and the state of the art during that time. Based on my experiences, I understand and know of the capabilities of persons of ordinary skill in this field during the 2000s and specifically during the time of the alleged invention of the ’337 patent. Indeed, I taught, participated in organizations, and worked closely with many such persons in the field during that time frame.

III. LEGAL PRINCIPLES

15. I have been informed about certain legal principles regarding patentability and related matters under United States patent law, which I have applied in performing my analysis and arriving at my technical opinions in this matter.

A. Anticipation

16. I have been informed that a patent claim is invalid as "anticipated" if every element of a claim, as properly construed, is found either explicitly or inherently in a single prior art reference. Under the principles of inherency, I understand that if the prior art necessarily functions in accordance with, or includes the claimed limitations, it anticipates.

17. I have been informed that a claim is invalid if the claimed invention was known or used by others in the U.S., or was patented or published anywhere, before the Applicant's invention. I further have been informed that a claim is invalid if the invention was patented or published anywhere, or was in public use, on sale, or offered for sale in this country, more than one year prior to the filing date of the patent application (the so-called critical date). I have also been informed that a claim is invalid if an invention described by that claim was described in a U.S. patent granted or an application for a patent (or in a published application for a U.S. patent) that was filed by another in the U.S. before the date of invention for such a claim.

B. Obviousness

18. I have been informed that a patent claim is invalid as "obvious" in light of one or more prior art references if it would have been obvious to a person of ordinary skill in the art at the time of the alleged invention ("POSITA"; refer to ¶¶ 33-34 below), taking into account (1) the scope and content of the prior art, (2)

the differences between the prior art and the claims, (3) the level of ordinary skill in the art, and (4) any so called "secondary considerations" of non-obviousness, which include: (i) "long felt need" for the claimed invention, (ii) commercial success attributable to the claimed invention, (iii) unexpected results of the claimed invention, and (iv) "copying" of the claimed invention by others.

19. The application that led to the '337 patent (U.S. Appl. No. 13/345,607) was filed on January 6, 2012 and claims priority to U.S. Provisional Application 61/179,109 filed on May 18, 2009. APPLE-1001, cover page. For purposes of my analysis here, I have applied a date of May 18, 2009 as the date of the alleged invention in my obviousness analysis, although in many cases the same analysis would hold true even if the date of the alleged invention occurred earlier than May 18, 2009.

20. I have been informed that a claim can be obvious in light of a single prior art reference or multiple prior art references. To be obvious in light of a single prior art reference or multiple prior art references, there must be a reason that would have prompted a POSITA to modify the single prior art reference, or combine two or more references, in a manner that provides the elements of the claimed invention. This reason may come from a teaching, suggestion, or motivation to combine, or may come from the reference(s) themselves, the knowledge or "common sense" of a POSITA, or from the nature of the problem to

be solved, and this reason may be explicit or implicit from the prior art as a whole. I have been informed that, under the law, the predictable combination of familiar elements according to known methods is likely to be obvious when it does no more than yield predictable results. I also understand it is improper to rely on hindsight in making the obviousness determination.

C. Claim Construction

21. I understand that, for purposes of my analysis in this *inter partes* review proceeding, the terms appearing in the patent claims should be interpreted according to their "ordinary and customary meaning." In determining the ordinary and customary meaning, the words of a claim are first given their plain meaning that those words would have had to a POSITA. I understand that the structure of the claims, the specification, and the file history also may be used to better construe a claim insofar as the plain meaning of the claims cannot be understood. I have followed this approach in my analysis.

22. I have also been informed that, according to 35 U.S.C. § 112, it is permissible for a claim element to be "expressed as a means or step for performing a specified function without the recital of structure, material, or acts in support thereof, and such claim shall be construed to cover the corresponding structure, material, or acts described in the specification and equivalents thereof."

23. I also understand that the words of the claims should be interpreted as they would have been interpreted by a POSITA at the time the alleged invention was made (not today). I have used the date of May 18, 2009 for reasons explained in ¶ 19 (above). However, the plain meanings/interpretations that I employed in my analysis below would have also been correct if the date of invention was anywhere within the early to mid-2000s. I have been informed by Counsel that the '337 patent is the subject of litigation in federal district court in which constructions of claims or terms of the '337 patent have been proposed by the parties. I have reviewed the proposed constructions from federal district court, including Patent Owner's Identification of Proposed Constructions (APPLE-1033), Apple's Proposed Claim Constructions (APPLE-1034), and Apple's Opening Claim Construction Brief (APPLE-1046). As I discuss herein, the claims are obvious in view of the prior art under either construction.

24. **"control component"** – I understand that Petitioner has interpreted "control component" as a means-plus-function term (APPLE-1034). The language of independent claims 1, 2, and 4 include the term "control component." In claims 1 and 4, the "control component" performs a specified function—"controls supply of power from the power supply to the driving component"—and that this function is performed to achieve a specific result—"cause the moveable component to oscillate at a frequency and an amplitude [that are independently] specified by user

input received from the user-input features." For the purpose of analyzing the prior art grounds according to the means-plus-function interpretation, I have treated "control component" in claims 1 and 4 as including one of the switches shown in Figures 5A-6 and described at 5:45-65, 6:2-8 and the processor (also referred to as microprocessor, microcontroller, or CPU) that performs the algorithm shown in Figures 7A-7C and described at 6:43-8:30, and equivalents of this structure. APPLE-1034, 5.

25. In claim 2, the "control component" performs a specified function—"controls supply of power from the power supply to the driving component"—and that this function is performed to achieve a specific result—"cause the moveable component to oscillate at a frequency and an amplitude specified by user input received from the user-input features" and "drives simultaneous oscillation of the moveable component at two or more frequencies to generate complex vibration modes." For the purpose of analyzing the prior art grounds according to the means-plus-function interpretation, I have treated "control component" in claim 2 as including one of the switches shown in Figures 5A-6 and described at 5:45-65, 6:2-8 and the processor (also referred to as microprocessor, microcontroller, or CPU) that performs the algorithm shown in Figures 7A-7C and described at 6:43-8:30 and 13:3-41, and equivalents of this structure. APPLE-1046, 12-13; APPLE-1034, 5.

26. As I discuss in more detail below, Grounds 2 and 4A-4B demonstrate unpatentability under the means-plus-function interpretation.

27. I understand that Patent Owner has agreed in co-pending litigation that "control component" in claim 2 should be interpreted according to the means-plus-function construction. I further note that Patent Owner identifies an alternative means-plus-function construction that only includes some unspecified part of the disclosed algorithm of the '337 patent. APPLE-1046, 12-13. In particular, Patent Owner alleged the corresponding structure of the "control component" as "microcontroller with internal or external memory; processor; CPU; microprocessor; and equivalents thereof," and "[if an algorithm is required] Where the corresponding structure is a processor, CPU, or microprocessor, the processor/CPU/ microprocessor is programmed with an algorithm comprising the following steps: (a) set the mode and strength to values representing selections made by user input to the user input features; (b) provide a corresponding output to the power supply so that the power supply provides a corresponding output to the driving component; and (c) drive simultaneous oscillation of the moveable component at two or more frequencies." APPLE-1046, 12-13. As discussed below, I note that the claims are also unpatentable under Patent Owner's various means-plus-function positions as to the "control component." *See*, Grounds 1 ([2f]-[2g]), 2 ([2f]-[2g]), 3A ([2f]-[2g]), 4A ([2f]-[2g]).

28. **"driving component"** – I understand that Petitioner has interpreted "driving component" as a means-plus-function term (APPLE-1034, 7). Claim 1 recites the "driving component" performs a specified function—"drives the moveable component to oscillate within the housing." For the purpose of analyzing the prior art grounds according to the means-plus-function interpretation, I have treated "driving component" as including "a coil of conductive wire 420" (Figures 4A-4G); "coil 514" (Figures 5A-5B); "coil 626" (Figure 6); "electromagnet" (Figures 10-11); "additional coils 1202 and 1204" (Figure 12); "coils 1302 and 1304" (Figure 13); "driving coils 1412 and 1414" (Figure 14); "coil 1510" (Figures 15-17); "stator coils" (Figures 24A-25), and equivalents thereof. APPLE-1001, 5:2-34, 5:54-59, 6:32-35, 9:11-52, 9:64-10:22, 14:5-9.

29. I understand that Patent Owner has agreed in co-pending litigation that "driving component" should be interpreted according to the means-plus-function construction, as set forth above. APPLE-1046, 5. As I discuss in more detail herein, all Grounds set forth why this element was provided in the prior art publications, regardless of whether this term is a means-plus-function or plain-and-ordinary meaning limitation.

IV. PERSON OF ORDINARY SKILL IN THE ART

30. A person of ordinary skill in the art at the time of the '337 patent (a "POSITA") would have had a degree in mechanical engineering, electrical

engineering, physics, or a related technical field, and at least 2-3 years of experience related to the design or development of systems incorporating linear actuators; additional years of experience could substitute for the advanced-level degree. In view of the pertinent prior art discussed herein, my analysis would be the same applying a slightly higher or lower level of skill.

31. I have used the date of the application that led to the ’337 patent claims priority as the point in time from which my analysis from the perspective of a POSITA is based—May 18, 2009—but my analysis would be similar even if the date was slightly earlier or later.

V. MATERIALS CONSIDERED

32. My analyses set forth in this declaration are based on my experience in the field of linear actuators, including haptic interfaces. Based on my above-described experience in the field, I believe that I am considered to be an expert in the field. Also, based on my experiences, I understand and know of the capabilities of persons of ordinary skill in this field during the mid- to late-2000s and specifically during the time before the alleged priority date (May 18, 2009) for the ’337 patent, and I taught, participated in organizations, and worked closely with many such persons in the field during that time frame.

33. As part of my independent analysis for this declaration, I have considered the following: the background knowledge/technologies that were

commonly known to persons of ordinary skill in this field during the time before the alleged priority date for the ’337 patent; my own knowledge and experiences gained from my work experience in the field; and my experience in working with others, including teaching and advising others in the field. In addition, I have analyzed the following publications and materials:

- U.S. Patent No. 8,860,337 (APPLE-1001)
- U.S. Patent No. 8,860,337 File History (APPLE-1002)
- U.S. Patent No. 7,843,277 to Pedro Gregorio, et al. (“Gregorio”) (APPLE-1004)
- U.S. Patent No. 7,005,811 to Hiroshi Wakuda, et al. (“Wakuda”) (APPLE-1005)
- U.S. Patent Application Publication. No. 2008/0294984 to Erin B. Ramsay, et al. (“Ramsay”) (APPLE-1006)
- U.S. Patent Application Publication No. 2006/0109256 to Danny A. Grant, et al. (“Grant”) (APPLE-1007)
- U.S. Patent Application Publication No. 2005/0134561 to Kollin M. Tierling, et al. (“Tierling”) (APPLE-1008)
- U.S. Patent Publication No. 2008/0246532 (“Cosper”) (APPLE-1009)
- U.S. Patent Application Publication No. 2008/0198139 to Robert Andre Lacroix, et al. (“Lacroix”) (APPLE-1010)

- U.S. Patent Application Publication No. 2005/0134562 to Danny Grant, et al. (APPLE-1011)
- C. McLyman, Chapter 1 – Fundamentals of Magnetics in Transformer and Inductor Design Handbook, Marcel Dekker, Third Edition, Revised and Expanded, 2004 (APPLE-1012)
- U.S. Patent No. 6,088,017 to Mark R. Tremblay, et al. (APPLE-1013)
- U.S. Patent No. 8,686,952 to Bobby Burrough, et al. (APPLE-1014)
- U.S. Patent No. 8,207,832 to Jue Byung Yun, et al. (APPLE-1015)
- U.S. Patent No. 8,203,640 to Jong Hwan Kim, et al. (APPLE-1016)
- U.S. Patent Application Publication No. 2007/0285216 to Kollin M. Tierling, et al. (APPLE-1017)
- Thorsten A. Kern, Engineering Haptic Devices: A Beginner's Guide for Engineers, Springer, 2009 (APPLE-1018)
- U.S. Patent No. 6,982,696 to Erik J. Shahoian (APPLE-1019)
- U.S. Patent No. 4,879,641 to Domenico Rossi, et al. ("Rossi") (APPLE-1020)
- Jack Aldrich, et al, Controller for Driving a Piezoelectric Actuator at Resonance, NASA Tech Briefs, April 2008 ("Aldrich") (APPLE-1021)
- Declaration of June Munford re Aldrich (APPLE-1022)

- U.S. Patent No. 7,027,032 to Louis B. Rosenberg, et al. ("Rosenberg") (APPLE-1023)
- U.S. Patent No. 5,736,797 to Ryo Motohashi, et al. ("Motohashi") (APPLE-1024)
- U.S. Patent No. 5,955,799 to Hidetoshi Amaya, et al. ("Amaya") (APPLE-1025)
- J. Peckol, Embedded Systems, A contemporary Design Tool, 2008 ("Peckol") (APPLE-1026)
- Corrosion - two case studies: aluminium and iron, Primary Connections: Linking science with literacy, available at https://www.primaryconnections.org.au/themes/custom/connections/assets/SBR/data/Chem/sub/corrosion/corrosion.htm#:~:text=When%20it%20starts%20to%20corrode,keep%20attacking%20the%20underlying%20iron (retrieved 2/12/2024) (APPLE-1027)
- How to Protect Aluminum From Corrosion, OneMonroe, available at https://monroeengineering.com/blog/how-to-protect-aluminum-from-corrosion/ (retrieved 2/12/2024) (APPLE-1028)
- Electrical Conductivity of Materials, Blue Sea Systems, https://www.bluesea.com/resources/108/Electrical_Conductivity_of_Materials (retrieved 2/12/2024) (APPLE-1029)

- Thermal Conductivity, available at hyperphysics.phy-astr.gsu.edu/hbase/Tables/thrcn.html (retrieved 2/12/2024) (APPLE-1030)
- U.S. Patent No. 8,134,437 to Elliot Brooks (APPLE-1031)
- Magnetic Materials, Phys 251; archived at Wayback Machine; citing a capture dated March 23, 2002 (https://web.archive.org/web/20020323183824/http://webphysics.iupui.edu/webscience/physics_archive/magneticmaterials.html) (APPLE-1032)
- Resonant Systems Proposed Claim Constructions, 7-23-cv-00077 (WDTX) (Feb. 15, 2024) (APPLE-1033)
- Apple, Inc. Proposed Claim Constructions, 7-23-cv-00077 (WDTX) (Feb. 15, 2024) (APPLE-1034)
- Types of Magnetism, DolTPoMS, Department of Materials Science and Metallurgy, University of Cambridge; archived at Wayback Machine; citing a capture dated October 9, 2006 (https://web.archive.org/web/20061015000000*/https://www.doitpoms.ac.uk/tlplib/ferromagnetic/types.php) (APPLE-1035)
- Moskowitz, B.M. (1991). Hitchhiker's Guide to Magnetism. In Environmental Magnetism Workshop, pp. 1–38. Minneapolis: The

Institute for Rock Magnetism and the Global Paleorecords Research Training Group (APPLE-1037)

- U.S. Patent Publication No. 2011/0133682 ("Egger") (APPLE-1040)
- U.S. Patent Publication No. 2008/0001484 ("Fuller") (APPLE-1041)
- U.S. Patent Publication No. 2006/0145547 ("Kraus") (APPLE-1042)
- U.S. Patent Publication No. 2005/0275294 ("Izumi") (APPLE-1043)
- Apple, Inc. Opening Claim Construction Brief, 7-23-cv-00077 (WDTX) (March 21, 2024) (APPLE-1046)

34. This declaration refers to selected portions of the cited references for the sake of brevity. These references are examples. It should be understood that a POSITA would have viewed the references cited herein in their entirety and in combination with other references cited herein or cited within the references themselves. The references used in this declaration, therefore, should be viewed as being considered herein in their entireties.

35. Of course, I have also considered the claims of the '337 patent. The following table provides a quick sheet enumerating claim elements for ease of reference:

Claim 1	
[1pre]	A linear vibration module comprising:
[1a]	a housing;

[1b]	a moveable component;
[1c]	a power supply;
[1d]	user-input features;
[1e]	a driving component that drives the moveable component in each of two opposite directions within the housing;
[1f]	a control component that controls supply of power from the power supply to the driving component to cause the moveable component to oscillate at a frequency and an amplitude specified by user input received from the user-input features; and
[1g]	flux paths comprising a paramagnetic material that is shaped and positioned to reduce the reluctance of one or more magnetic circuits within the linear vibration module.
Claim 2	
[2pre]	A linear vibration module comprising:
[2a]	a housing;
[2b]	a moveable component;
[2c]	a power supply;
[2d]	user-input features;
[2e]	a driving component that drives the moveable component in each of two opposite directions within the housing; and
[2f]	a control component that controls supply of power from the power supply to the driving component to cause the moveable component to oscillate at a frequency and an amplitude specified by user input received from the user-input features,
[2g]	wherein the control component drives simultaneous oscillation of the moveable component at two or more frequencies to generate complex vibration modes.

Claim 3	
[3]	The linear vibration module of claim 2 wherein the complex vibration modes include: a primary oscillation frequency modulated by a modulating oscillation frequency; a beat frequency; and an aperiodic oscillation waveform.
Claim 4	
[4pre]	A linear vibration module comprising:
[4a]	a housing;
[4b]	a moveable component;
[4c]	a power supply;
[4d]	user-input features;
[4e]	a driving component that drives the moveable component in each of two opposite directions within the housing; and
[4f]	a control component that controls supply of power from the power supply to the driving component to cause the moveable component to oscillate at a frequency and an amplitude that are independently specified by user input received from the user-input features.

VI. OVERVIEW OF THE '337 PATENT

A. Summary of the '337 Patent

36. The '337 patent provides "vibration modules that can be incorporated into a wide variety of different types of electromechanical devices and systems to produce vibrations of selected amplitudes and frequencies over a wide range of amplitude/frequency space." APPLE-1001, 1:14-19. The '337 patent notes that such vibration modules "can be incorporated in a wide variety of appliances, devices, and systems to provide vibrational forces," such as "consumer appliances"

and "pagers." *Id.*, Abstract, 1:23-31, 2:63-3:2, 3:58-60, 4:13-17. In the '337 patent, for example, "the vibrational forces are produced by a linear oscillation of a weight or component within the LVM [linear vibration module] or LRVM [linear resonant vibration module], rather than as a by-product of an unbalanced rotation," addressing problems with prior art unbalanced vibration-inducing motors. *Id.*, 4:17-32.

37. The '337 patent's Background Section describes problems associated with vibration-inducing devices that use intentionally unbalanced electric motors. Specifically, the '337 patent states that problems with such vibration-inducing devices include (1) "rapid deterioration of motor parts" (APPLE-1001, 2:11-30), (2) "inefficient at producing vibrational motion" (APPLE-1001, 2:31-38), (3) "elliptical vibration modes" (APPLE-1001, 2:39-45), and (4) "a very limited portion of the total vibrational-force/frequency space is accessible" (APPLE-1001, 2:46-62).

38. The '337 patent recites features of "linear-resonant vibration modules . . . to provide vibrational forces." APPLE-1001, 3:6-9. Figure 4A reproduced below illustrates one linear-resonant vibration module (LRVM):

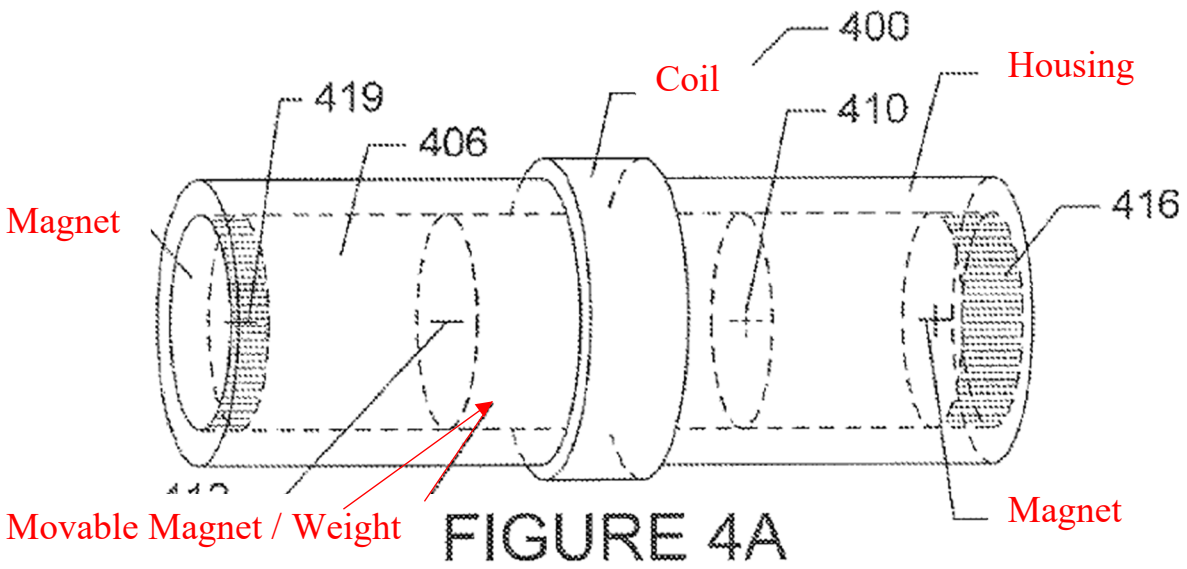

APPLE-1001, Figure 4A (annotated)

39. Figure 4A of the '337 patent shows an LRVM that "includes a cylindrical housing 402 within which a solid, cylindrical mass 404, or weight, can move linearly along the inner, hollow cylindrically shaped chamber 406 within the cylindrical housing or tube 402." APPLE-1001, 4:49-52. The vibrational forces of the linear resonant vibration module (LRVM) "are produced by a linear oscillation of a weight or member." APPLE-1001, 3:9-12. The '337 patent relies on the magnetic force naturally created by current flowing through the coil to move the magnetic weight. *E.g.*, APPLE-1001, 4:44-5:34, Figures 4A-G. And of course, the direction of the current flowing through the coil controls the direction of the magnetic force. *Id.*

40. To control the direction of the current, the '337 patent describes an H-bridge switch. APPLE-1001, 5:43-65 (describing an H-bridge switch that can be used "to change the direction of current applied to the coil that drives linear oscillation within an LRVM"). An example of the H-bridge switch and its operation is shown in Figures 5A-B, reproduced below:

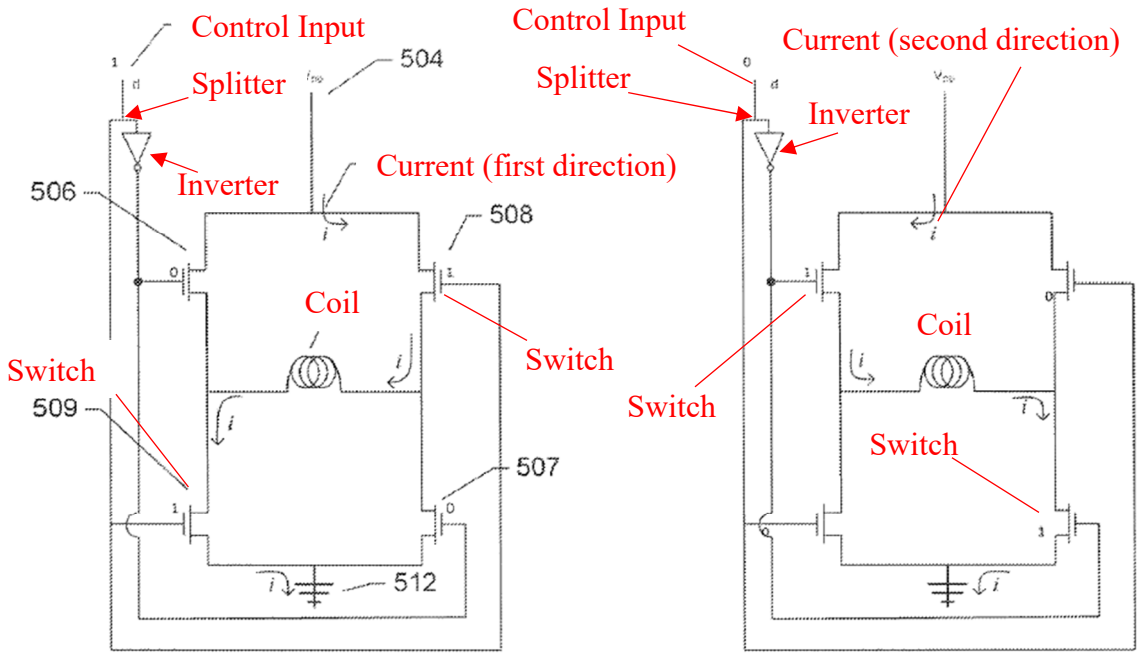

FIGURE 5A FIGURE 5B

APPLE-1001, Figures 5A-B (annotated)

41. H-bridge switching arrangements were very common and well known to POSITA's in the period prior to May 18, 2009. For example, the H-bridge is described in Peckol (APPLE-1026) which is a textbook on embedded software from 2008. The H-bridge switch shown above in Figures 5A and 5B of the '337

patent follows typical H-bridge switching operation.[1] A control input is used to control switches so that the current can pass through the coil. APPLE-1001, 5:52-61. Like any H-bridge, depending on which switches are closed, the current will flow in either the first direction (shown in Figure 5A) or a second direction (shown in Figure 5B). *Id*. In the example above, an "input control signal d 502" controls four switches 506-509. *Id*. When input control signal 502 is a "1" as shown in Figure 5A, "switches 508 and 509 are closed and switches 506 and 507 are open, and therefore current flows . . . in the leftward direction through the coil 514." *Id*. "When the input control signal d is low, or '0' as shown in Figure 5B, the direction of the current through the coil is reversed." *Id.*

42. The LRVM of the '337 patent includes a CPU microprocessor 602, which is shown in Figure 6 below:

---

[1] I note that the circuit shown in Figures 5A-B includes an inverter, which is not described in the Detailed Description of the '337 patent. The inverter is a known design choice so that a single control input signal can be used to control all four switches at the same time. *See, e.g.*, APPLE-1020, FIGS. 1, 4, & 6; APPLE-1040, Figure 4. The controller / CPU could also send separate control signals to each switch to accomplish the same result.

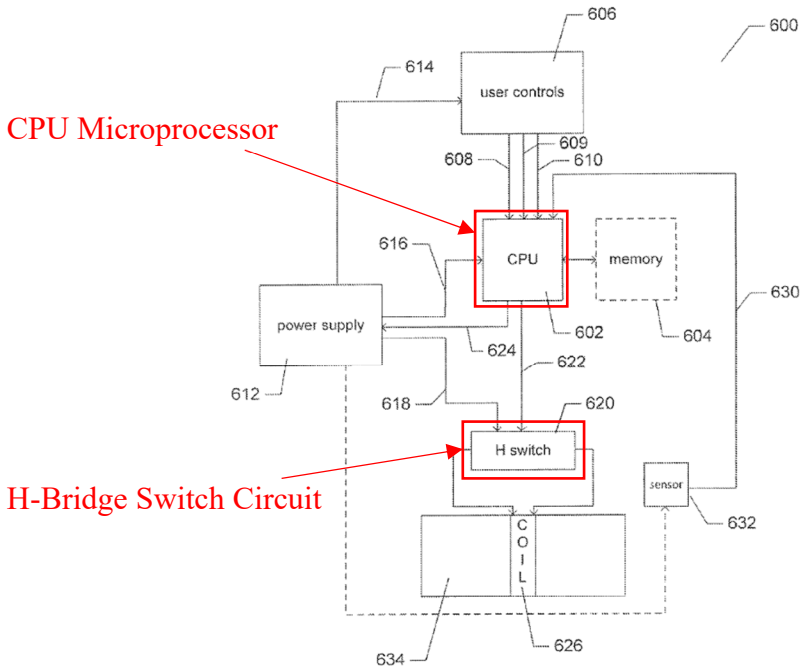

FIGURE 6

APPLE-1001, Figure 6 (annotated)

43. The ’337 patent describes that the “H-bridge switch 620 receives a control-signal input d 622 from the CPU. The power supply 612 receives a control input 624 from the CPU to control the current supplied to the H-bridge switch 618 for transfer to the coil 626.” APPLE-1001, 6:32-35. The CPU receives information from “one or more electromechanical sensors 632 that generate a signal corresponding to the strength of vibration currently being produced by the linearly oscillating mass 634.” *Id.*, 6:36-39. And the “frequency of the oscillation of the solid, cylindrical mass is determined by the frequency at which the direction of the current applied to the coil is changed.” *Id.*, 5:43-45.

44. The CPU can execute a control program to control operation of the LRVM. APPLE-1001, 6:43-47, Figures 7A-C. The control program is used to control the frequency and vibrational force of the oscillation. *See*, *id*., 7:38-42. Specifically, the CPU uses a routine called "monitor" that "converts the sensor input into an integer representing the current vibrational force produced by the LRVM." *Id*., 7:43-46. Figure 7B is a "control flow diagram for the routine 'monitor.'" *Id*., 7:33-36. In the default mode for the routine "monitor," the "LRVM" uses "continuous feedback control to optimize the vibrational force produced by the LRVM by continuously seeking to operate the LRVM at a frequency as close as possible to the resonant frequency for the LRVM." *Id*., 7:38-42.[2]

45. The LRVM includes a feedback control mechanism to maintain the frequency of the vibration close to the resonant frequency of the device. APPLE-1001, 4:36-41. In the words of the '337 patent, "the frequency of vibration falls close to the resonant frequency of the LRVM, [and] results in optimal power consumption with respect to the amplitude and frequency of vibration produced by the LRVM." *Id.*

B. Prosecution History of the '337 Patent

---

[2] The '337 patent states that more "complex vibrational modes" are also possible.

46. The ’337 patent issued on October 14, 2014 from U.S. Patent Application No. 13/345,607 (“the ’607 application”), which was filed on January 6, 2012. APPLE-1002, 2, 120. During prosecution, a first office action rejected then-pending claims 1-3 as obvious over US 2005/0231045 (“Oba”), US 2005/0275508 (“Orr”), and US 2011/0248817 (“Houston”), rejected claims 4-9 as obvious over Oba, Orr, Houston, and US 5,955,799 (“Amaya”), and rejected claims 10-13 as obvious over Oba, Orr, Houston, US 2006/0208600 (“Sahyoun”), US 6,323,568 (“Zaber”), and US 2006/0138875 (“Kim”). *Id.*, 51-57. The office action indicated that claims 14-18 were objected to and would be allowable if rewritten in independent form. *Id.*, 55. In response, then-Applicant cancelled claims 1-13 without traversing the rejections of claims 1-13, and rewrote claims 14, 15, 17, and 18 in independent form. *Id.*, 25-30.

47. A notice of allowance followed, ending prosecution prematurely and without the benefit of more pertinent art such as Gregorio, Wakuda, Tierling, Ramsay, Rossi, and Aldrich. The notice of allowance did not discuss any reasons for allowance. APPLE-1002, 8-12. While the ’337 patent touts its linear resonant vibration device as an “invention,” it was not innovative. Those of skill in the art were aware of linear vibration devices that included a microprocessor and feedback control mechanisms, and the advantage of reduced power consumption when operating at or near resonance.

48. I note that the prior art analyzed here was never used in a rejection of the claims. Specifically, the examiner allowed the claims without the benefit of relevant art discussed herein, such as Gregorio, Wakuda, Tierling, Ramsay, Rossi, and Aldrich. Based on my knowledge and experience, and my review of the publications I discuss in more detail below, I do not agree that the ’337 patent claims are patentable over the prior art. Those of skill in the art were aware of linear vibration devices that shared the same structural design and the known use of a microprocessor and feedback control mechanisms in such devices. For example, in addition to the known structural features recited by the ’337 patent, the advantages of operating at or near resonance were also known in the art. For example, Fuller describes a linear electromechanical vibrator with axially movable magnet that operates at the resonance frequency of the movable magnet. *E.g.*, APPLE-1041, [0036].

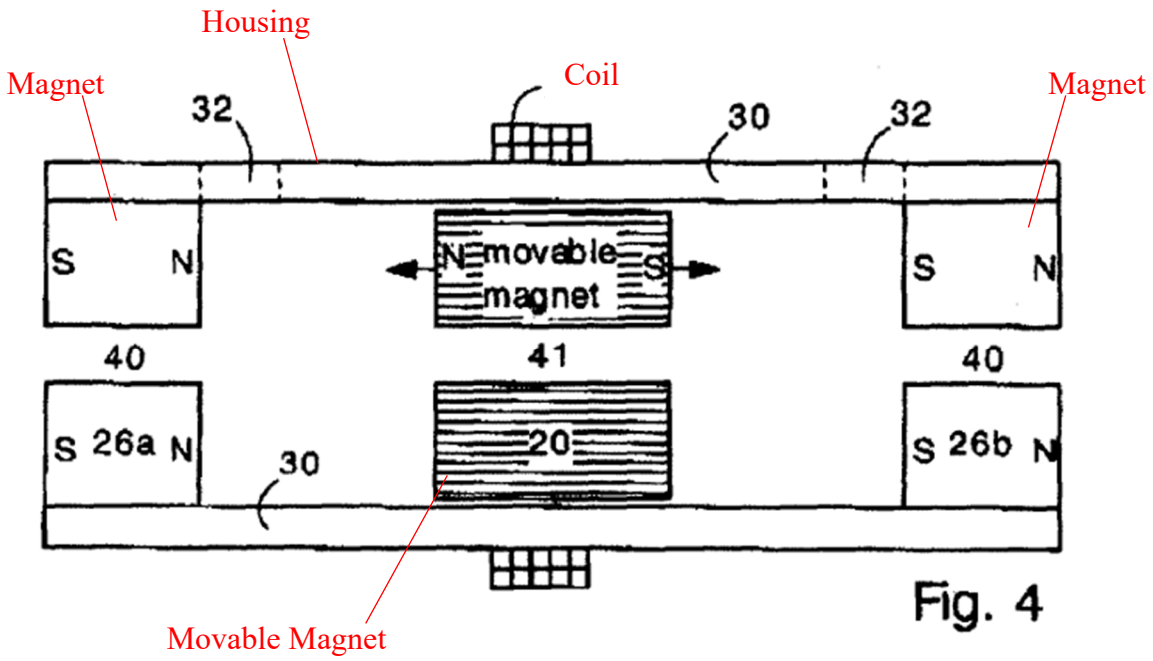

APPLE-1041, FIG. 4 (annotated)

49. Fuller describes that the coil can apply both pushing and pulling forces to the movable magnet. APPLE-1041, [0043]. The alternating current applied to the field coils preferably "has a frequency selected to match a mechanical resonance frequency of the movable magnet 20." APPLE-1041, [0036]. Fuller also describes that the current applied to the coils can have "a range of frequencies that includes the mechanical resonance frequency of the movable magnet." *Id*. Fuller provides another example of a linear resonant vibration module that uses feedback control to determine the "proper resonant frequency for the alternating current." *Id*.

50. As mentioned above, the H-bridge switch shown by the ’337 patent was well known at the time, and used in similar vibration modules. For example, Rossi shows an H-bridge switch that includes a splitter/inverter, as shown in Figure 6, reproduced below:

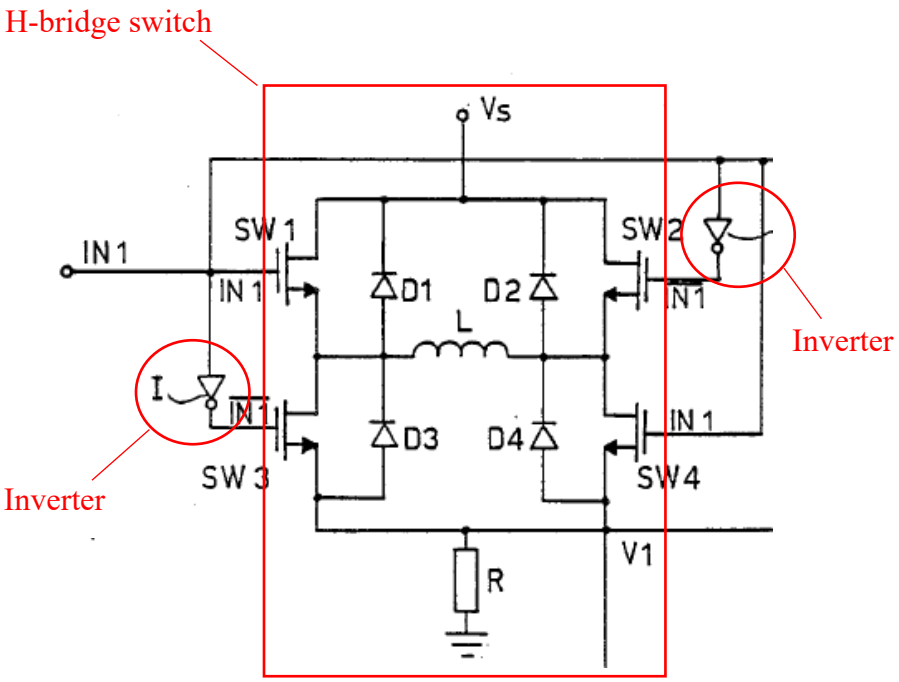

APPLE-1020, Figure 6 (annotated)

51. As shown by Rossi’s Figure 6, for example, an H-bridge switch with inverter/spitter components was a known technique at the time for providing an oscillating current through a load (e.g., electromagnet coil).

52. In another example, Izumi also teaches the use of an H-bridge switch for providing bi-directional drive signals to an inductive load, as shown in Figure 22A, for example. Figure 22A is reproduced below:

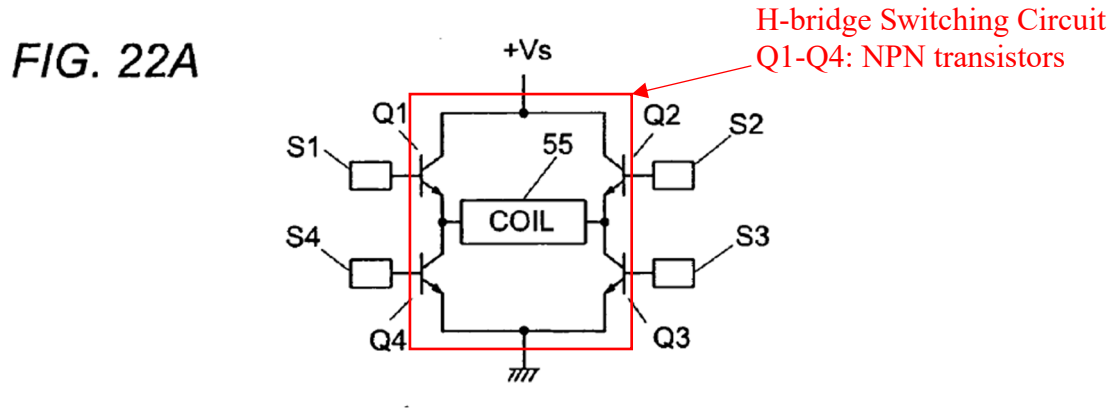

APPLE-1043, Figure 22A (annotated)

53. In Figure 22A, Izumi illustrates the alternating voltage output part 61 as being "constituted by a series circuit of switching elements Q1 and Q4 . . . and a series circuit of switching elements Q2 and Q3." APPLE-1043, [0060]. "The switching elements Q1 to Q4 are controlled by control signals S1 to S4, respectively, which are inputted into the base terminals by the current waveform decider 60." *Id*. In Figure 22A, the switching elements Q1 to Q4 are NPN transistors. Figure 22D is similar to Figure 22A, but uses field effect transistors (FETs) for the switching elements. *Id*., [0061], Figure 22D.

54. In yet another example, Egger (APPLE-1040), Figure 4 shows an H-bridge switch with an inverter/splitter:

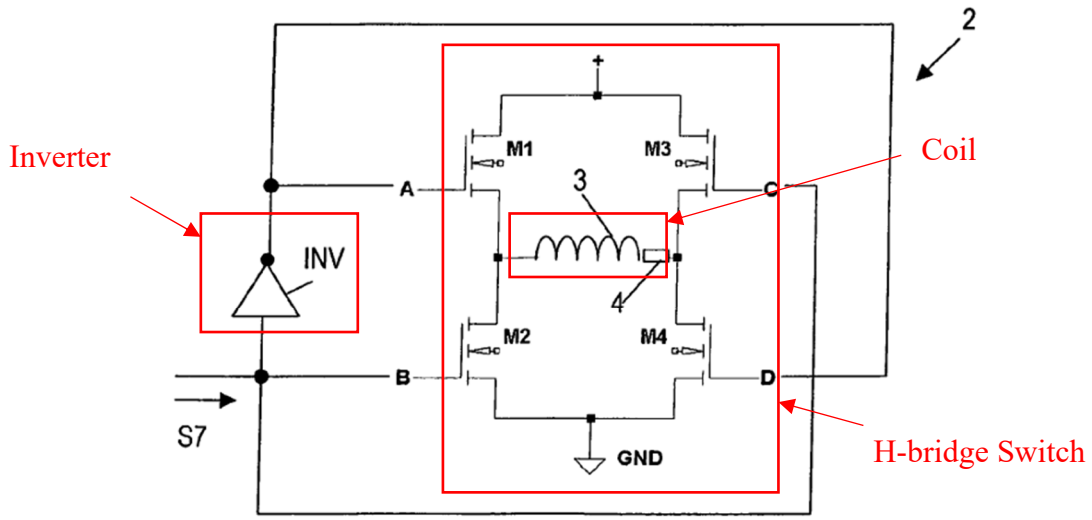

Fig. 4

APPLE-1040, Figure 4 (annotated)

55. Figure 4 shows a coil 3 "connected into the transverse path between the two half bridges." APPLE-1040, [0078]. A control signal is "supplied to the transistors M2, M4 directly as a control signal and to the transistors M1, M3 via an inverter INV in an inverted form. As a result, the transistors always switch on or off diagonally, i.e., either the transistors M1 and M4 are switched on and the transistors M2 and M3 are switched off, or vice versa." *Id*.

56. Based on my knowledge and experience in the field, and highlighted by examples discussed above, the LRVM structure recited by the '337 patent, the use of feedback control to drive the LRVM at resonance, and the use of an H-bridge switch with an inverter were all known techniques for linear resonant vibration modules at the time of the '337 patent priority date.

VII. OVERVIEW OF THE CITED REFERENCES

A. Overview of Gregorio

57. U.S. Patent No. 7,843,277 to Pedro Gregorio, et al. is titled "Haptic Feedback Generation Based On Resonant Frequency." Gregorio was filed on December 16, 2008 and issued as a patent on November 30, 2010.

58. Gregorio describes "a system that drives an LRA [Linear Resonant Actuator] to generate vibrotactile haptic feedback on a user interface or other area of a device." APPLE-1004, 2:3-5. Because "each LRA may have a different resonant frequency" and such a resonant frequency may change "due to different uses of a device or due to manufacturing tolerances," Gregorio's system is configured such that "the resonant frequency of the LRA can be determined during a drive period and the drive signal can be adjusted to maximize the haptic feedback based on the determined resonant frequency." *Id.*, 3:1-11, 3:58-64, 2:5-9.

59. Gregorio's "haptically-enabled system 10" can be "a handheld device, such as a cellular telephone, PDA, computer tablet, etc. or may be any other type of device that provides a user interface and includes a haptic effect system that includes one or more LRAs." APPLE-1004, 3:1-4. The system 10 "includes a touch sensitive surface 11 or other type of user interface mounted within a housing 15, and may include mechanical keys/buttons 13." *Id.*, 2:10-14, Figure 1 (below).

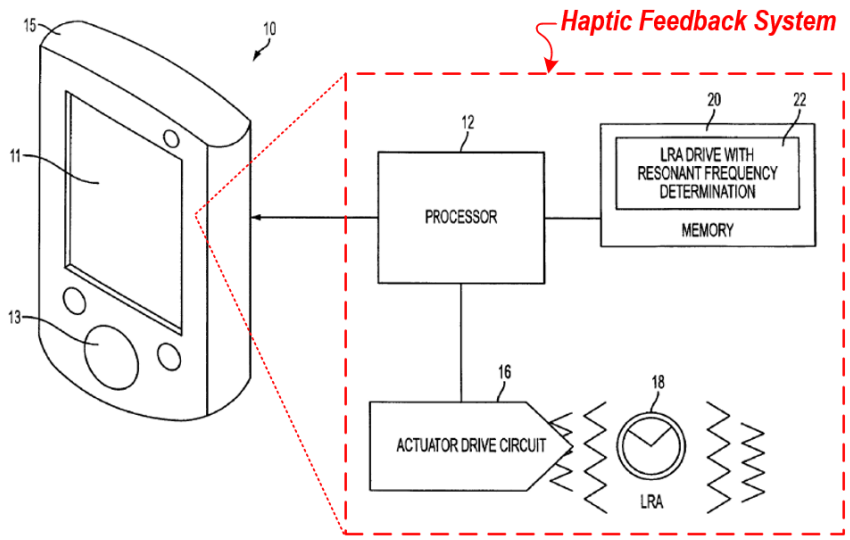

APPLE-1004, Figure 1 (annotated)

60. Gregorio further describes that "[i]nternal to system 10 is a haptic feedback system that generates vibrations on system 10." APPLE-1004, 2:14-17. As illustrated in Figure 1 above, the haptic feedback system includes "processor 12," "memory 20," "actuator drive circuit 16," and "LRA actuator 18." *Id.*, 2:18-20. "Processor 12 can decide what haptic effects are to be played and the order in which the effects are played based on high level parameters," and "output[] the control signals to drive circuit 16 which includes electronic components and circuitry used to supply LRA 18 with the required electrical current and voltage to cause the desired haptic effects." *Id.*, 2:25-28, 2:36-39. "Memory 20 stores instructions executed by processor 20." *Id.*, 2:44-45. In one example, "memory 20 includes an LRA Drive with Resonant Frequency Determination module 22 which are instructions that, when executed by processor 12, generate drive signals for

LRA 18 while also determining the resonant frequency of LRA 18 and adjusting the drive signals accordingly." *Id.*, 2:45-50.

61. Referring to Figure 2 below, the LRA includes "a casing 25, a magnet/mass 27, a linear spring 26, and an electric coil 28." APPLE-1004, 3:12-14. "[W]hen current flows thru coil 28 a magnetic field forms around coil 28 which in interaction with the magnetic field of magnet 27 pushes or pulls on magnet 27. One current flow direction/polarity causes a push action and the other a pull action." *Id.*, 3:17-21.

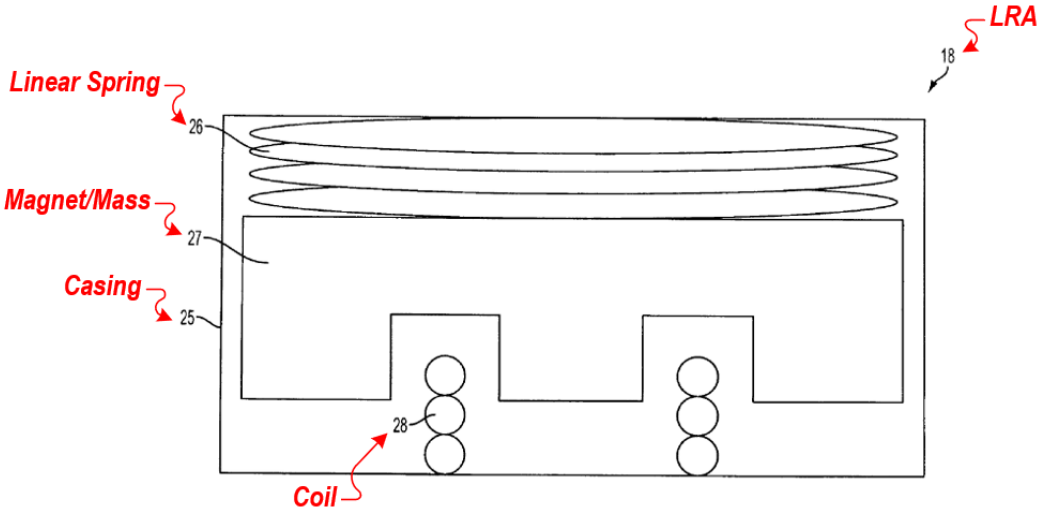

APPLE-1004, Figure 2 (annotated)

62. In generating haptic feedback, Gregorio's system performs "a continuous loop during a drive cycle that includes a drive period and a monitoring period." APPLE-1004, 4:15-20. The system "constantly and dynamically determines the resonant frequency of LRA 18 while during a monitoring period of a drive signal cycle." *Id.*, 3:65-67. In particular, "during the monitoring period

(approximately 10%) of the drive cycle, drive circuit 16 'listens' or monitors and receives magnetic back EMF (i.e., the voltage generated by the [magnet's] internal motion inside [the coil of] LRA 18) from LRA 18." *Id.*, 4:24-28. The received back EMF ("electromagnetic force")[3] is "used to determine the resonant frequency of the LRA." *Id.*, 4:2-5. "The subsequent drive pulses are then adjusted to account for the resonant frequency." *Id.*, 6:8-9.

63. Instead of monitoring back EMF signals, the system can use "a sensing coil, Hall sensor, optical sensor or other type of sensing device that is located in proximity to mass 27 for detecting the position of mass 27. In this embodiment, the sensing device will provide a sensed position signal that can be used as the monitoring signal to provide information about the position of the mass 27 instead of the back EMF signal generated by the mass and drive coil of the LRA itself." APPLE-1004, 4:7-14.

B. Overview of Wakuda

---

[3] Although Gregorio describes that "EMF" stands for "electromagnetic field" (APPLE-1004, 4:3), I understand the term is typically understood as meaning "electromagnetic force."

64. U.S. Patent No. 7,005,811 to Hiroshi Wakuda, et al. is titled "Bodily Sensed Vibration Generator System." APPLE-1005, Cover Page. Wakuda was filed on November 19, 2003 and patented on February 28, 2006. *Id*.

65. Wakuda provides "a vibration generator system, which can generate vibrations at a frequency that can be bodily sensed by humans, while being small in size, and which makes setting of a configuration of vibrations easy." APPLE-1005, 2:13-17. Wakuda's "vibration generator means 1" includes "a cylindrical-shaped casing 2," "covers 3," "a coil 5," a "movable body 6" including a weight 7 and a magnet M, and "energizing members 9" (e.g., "cone coil springs") that are "provided between both ends of the movable body 6 and inner surfaces of the covers 3." *Id.*, 4:30-5:24.

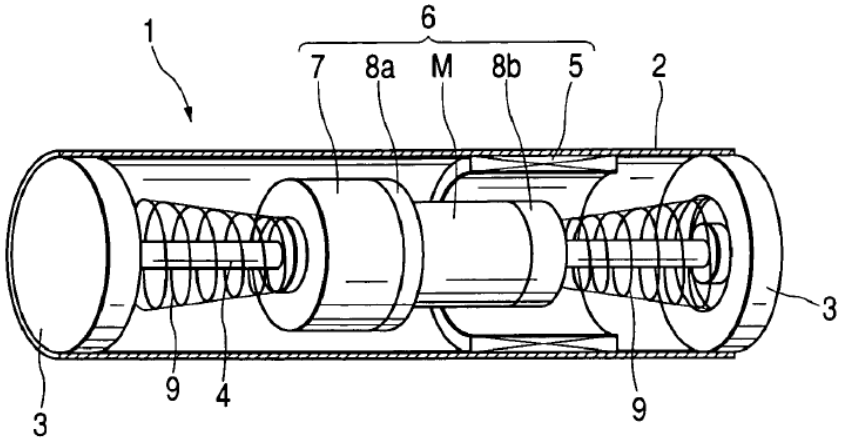

APPLE-1005, Figure 1A

66. Wakuda can generate a "drive signal S1" for driving the movable body, which includes "an accumulation signal S1a" that "excites resonant vibrations at the natural frequency in the movable body 6," and "a damping signal

S1b" thereafter. APPLE-1005, 7:9-17, 8:40-48, Figure 4. As shown in Figure 5, "where the accumulation signal S1 a and the damping signal S1b are made consecutive and signals composed of a set of the accumulation signal S1a and the damping signal S1b are given at a cycle Te," "the movable body 6 vibrates at the natural frequency (resonance frequency), its amplitude increasing with time for the accumulation signal S1 a, and damping with time for the damping signal S1b." *Id.*, 9:12-15. "[A] line connecting peaks of amplitude of the movable body 6 together is shown as an envelope E, the envelope E increasing or decreasing according to the cycle Te of the accumulation signal S1 a and the damping signal S1 b, and a frequency fe of the envelope E corresponding to 1/Te." *Id.*, 9:15-20. As such, "[a] frequency of the envelope is in a lower band than a natural frequency. The envelope is varied whereby changes in intensity of vibrations are given to humans. Since changes in intensity of vibrations are easy to be bodily sensed as changes in feeling of pressure and the frequency of the envelope is in a frequency band, which can be bodily sensed effectively, humans can surely detect vibrations." *Id.*, 2:29-40.

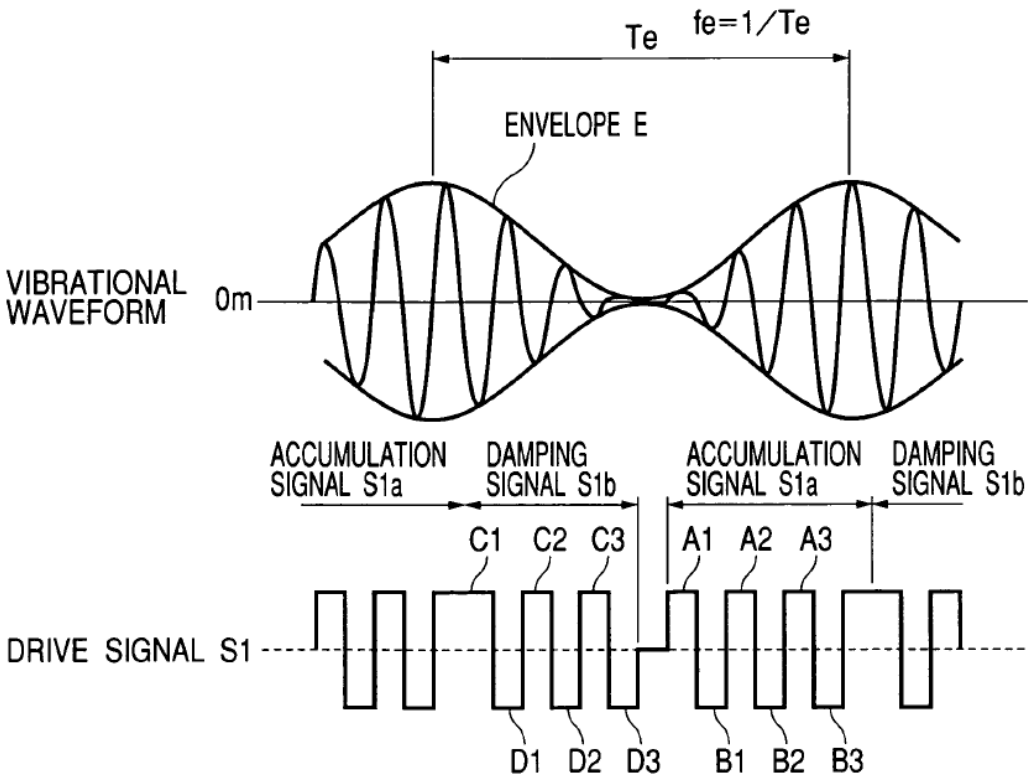

APPLE-1005, Figure 5

C. Overview of Ramsay

67. U.S. Patent Application Publication. No. 2008/0294984 to Erin B. Ramsay, et al. is titled " Customizing Haptic Effects On An End User Device." APPLE-1006, Cover Page. Ramsay was filed on April 1, 2008 and patented on December 31, 2013. *Id.*

68. Ramsay provides techniques for "enabling a regular user of an end user device, such as a cellular telephone, to customize parameters associated with haptic effects applied to the user by the end user device." APPLE-1006, Abstract. For example, "the user may access programmable haptic design software 30 via GUI 24." *Id.*, [0032]. "[P]arameters or characteristics of a haptic output or haptic

track" that are modifiable "include a frequency of vibration and amplitude of vibration. Also, the frequency and amplitude can be set to change over time." *Id.*, [0030], [0033], [0035], [0046]. By way of example, Figure 4 illustrates a "graphical user interface (GUI) 50" that includes a magnitude adjusting mechanism 54, duration adjusting mechanism 56, and an envelope adjusting mechanism 58." *Id.*, [0053]. In addition, Ramsay can "enable[] the user to enter one or more frequencies for the haptic track or even continually changing frequencies to be played along the length of the haptic track." *Id.*, [0046].

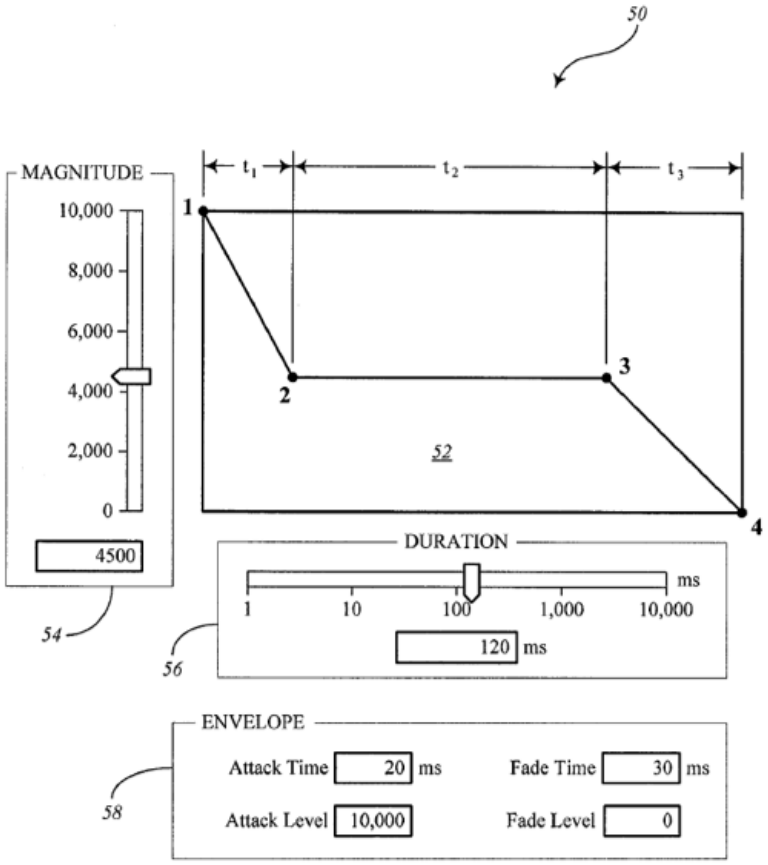

APPLE-1006, Figure 4

69. With Ramsay's system, users can have "the power to create customized haptic effects," "similar to those available to a professional haptic designer." APPLE-1006, [0015]. For example, users can not only create and modify haptic parameters such as "a frequency of vibration and amplitude of vibration" in each haptic track, but also "combine or mix different haptic tracks together if desired to provide a fuller haptic experience." *Id.*, [0030]. Ramsay can "allow[] the user to combine haptic tracks to play simultaneously, to overlap in time for a portion of the time, to play end-to-end, or even to start a subsequent track after a short pause at the end of a first track. When programmed to overlap in time, two or more haptic tracks can be programmed to be simultaneous or partially overlapping in time in any desirable manner." *Id.*, [0047]. Further, users are enabled "to enter one or more frequencies for the haptic track or even continually changing frequencies to be played along the length of the haptic track." *Id.*, [0037].

70. Further, Ramsay describes that "ROM 28 may be configured to store a library of preset haptic tracks that can be used as a general starting point for creating new tracks," and "can also store haptic track files created or modified by the user and can also store mixed track files, which include multiple haptic tracks combined together." APPLE-1006, [0028]; *see also* [0034], [0042], [0049] ("If end user device 10 does include a haptic actuating device, test playback module 42

can be used to play a haptic track or mixed track that is temporarily stored in temporary storage unit 34."), [0058] ("certain representations or values describing the aspects of the haptic track can be stored in order to recreate haptic track 44 at a later time."), [0065] ("the user is enabled to store the modified file.").

D. Overview of Tierling

71. U.S. Patent Application Publication No. 2005/0134561 to Kollin M. Tierling, et al. is titled "System and Method for Mapping Instructions Associated with Haptic Feedback." APPLE-1008, Cover Page. Tierling was filed on December 2, 2004 and patented on September 7, 2010. *Id*.

72. Tierling provides "mapping drive signals to haptic sensations" at user interface devices, such as wireless phone. APPLE-1008, [0002]-[0003]. Tierling's "[e]ffect mappings ... can alter or control effect components or parameters of a haptic sensation, such as amplitude, waveshape, frequency, phase, duration, or delay of the haptic feedback to be output by a haptic device." *Id.*, [0031]. Such effect components or parameters can be controlled "by way of synthesis or other combination" and "output simultaneously or in sequence." *Id.* "In cases where haptic feedback components are synthesized, the frequency of a first component can be modulated by the frequency of a second component." *Id.*

73. In one implementation, Tierling's system operates at both "a desired output frequency and a resonant frequency of a haptic device," which are

superimposed on each other. APPLE-1008, [0110]-[0112], Figures 9-10. Therefore, Tierling's harmonic haptic device can be driven "without losing the low-frequency components." *Id.*

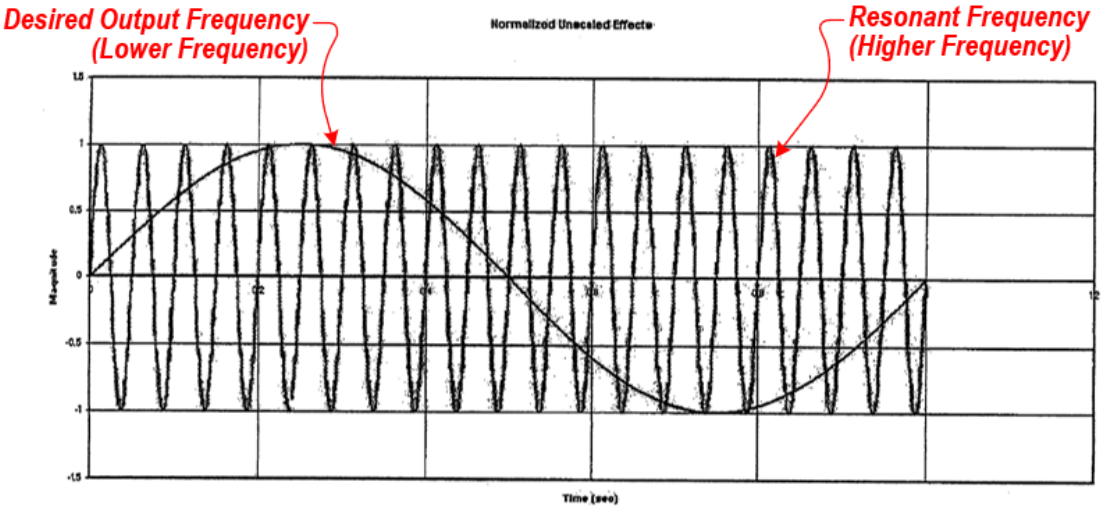

APPLE-1008, Figure 9 (annotated)

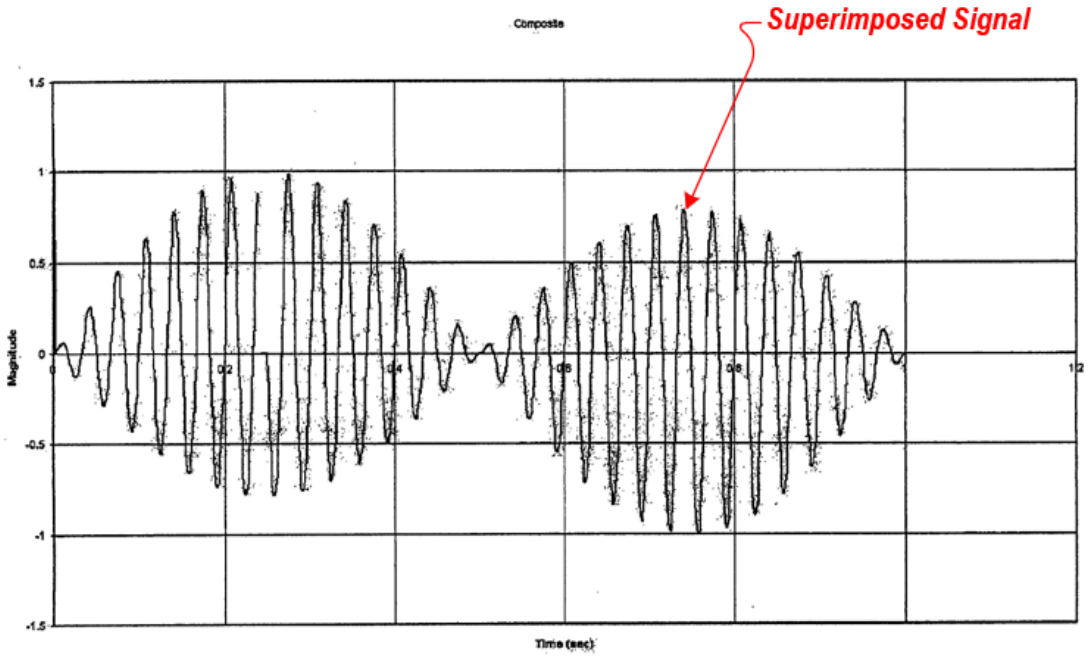

APPLE-1008, Figure 10 (annotated)

E. Overview of Rossi

74. U.S. Patent No. 4,879,641 to Rossi is titled, "Analog Multiplex for Sensing the Magnitude and Sense of the Current Through a H-bridge Stage Utilizing a Single Sensing Resistance." APPLE-1020, Cover Page. Rossi was filed on October 28, 1988 and patented on November 7, 1989. *Id*.

75. Rossi is generally directed to "circuits for a switching mode driving of a load and in particular to circuit arrangements for controlling the current being delivered to the load." APPLE-1020, 1:8-11. "The control of the driving of the load is based upon the sensing of the magnitude (modulus) and of the sense (direction) of the current flowing through the load L." *Id*., 2:13-15. Accordingly, Rossi describes a circuit for determining "the magnitude and direction of the electric current flowing through the load L of the H-bridge stage." *E.g*., *id*., 3:8-10.

76. According to Rossi, it was known at that time to use H-bridge circuits for driving loads, including inductive loads. *Id.*, 1:12-23. For example, FIG. 6 reproduced below, shows "an H-bridge" switch circuit that was "according to a known technique." *Id*., 1:50-53.

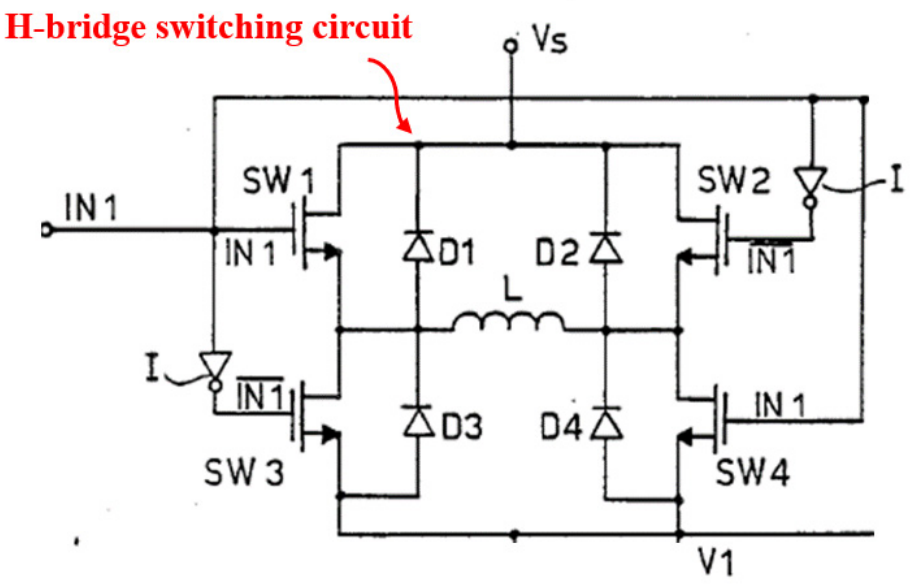

APPLE-1020, FIG. 6 (annotated)

77. The same H-bridge switch configuration is also shown in FIG. 1, which is partially reproduced below:

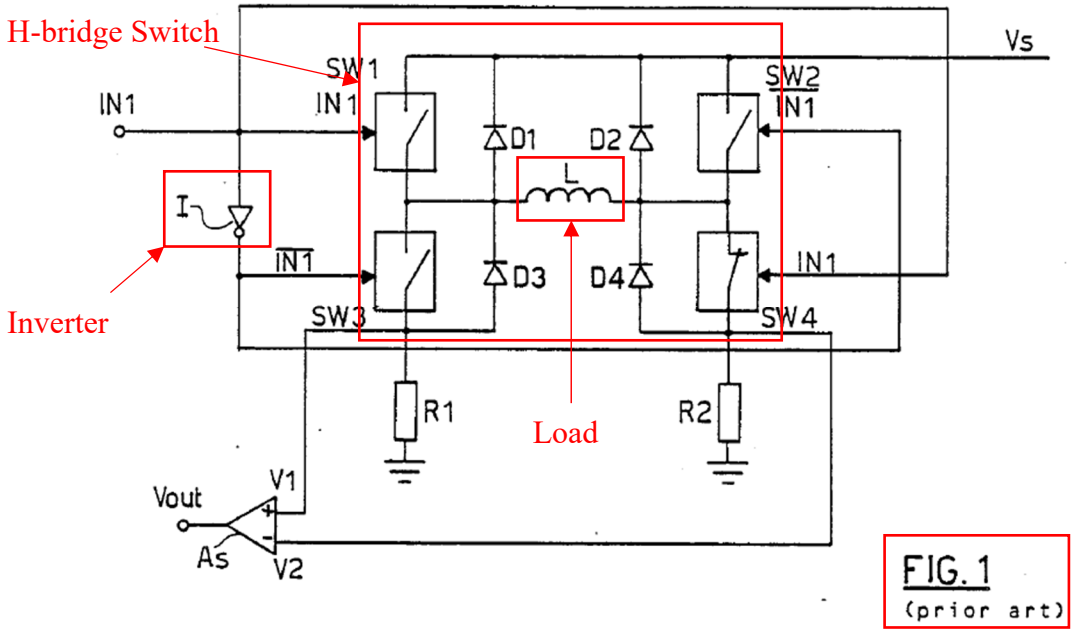

APPLE-1020, FIG. 1 (partial, annotated)

78. As shown in both FIGS. 1 and 6, the H-bridge stage includes four switches: "SW1, SW4 and SW2, SW3; driven, respectively, by a driving signal IN1 and by the inverted signal thereof $\overline{\text{IN1}}$, the later being obtained by means of an inverter I." *E.g.*, APPLE-1020, 1:65-2:2.

79. Rossi describes an H-bridge stage that includes "two pairs of analog switches arranged in a bridge configuration." APPLE-1020, Abstract; 1:65-3:55. The H-bridge stage includes a "driving signal IN1" input. *Id.*; *see also*, 1:8-47; 2:50-3:55. The "driving signal IN1" is split, and a portion passed through an "inverter I" to generate an internal "driving signal IN1" and an "inverted signal thereof ($\overline{\text{IN1}}$)." *Id.*, 1:65-2:11, 3:43-55, FIGS. 1, 4, & 6, claims 1, 3, & 4.

F. Overview of Aldrich

80. Aldrich was published in NASA Tech Briefs in April 2008, and is titled, "Controller for Driving Piezoelectric Actuator Resonance." APPLE-1021, 1. I note that NASA Tech Briefs was a publication widely known to the POSITA as a resource to be consulted for various design and engineering topics, including actuator feedback control and other topics, and were published monthly (e.g., including the April 2008 issue).

81. Aldrich describes a feedback control algorithm to drive an actuator to "one of the resonance peaks and eventually to oscillate about the peak." APPLE-

1021, 2. The digital control system of Aldrich is "based partly on an extremum-seeking control algorithm tracks the changing resonance frequency of a piezoelectric actuator or an electrically similar electromechanical device." *Id.*, 1.

82. Aldrich's control system uses an algorithm that includes "a hill-climbing control algorithm, an estimation-based extremum-seeking control (ESC) algorithm, and a supervisory algorithm." APPLE-1021, 2. The hill-climbing algorithm is used for "coarse tracking to find and remain within the vicinity of the resonance." *Id*.

83. In the hill-climbing algorithm, "the excitation frequency during the next sampling period is incremented or decremented by an arbitrary fixed step." APPLE-1021, 2. If the result of the increment or decrement is an increased output (e.g., in the current/voltage ratio), then the direction of change of frequency is accepted and another such change is made during the next sampling period. *Id*. If the change in frequency results in a decrease in output, then the direction of change of frequency is reversed during the next sampling period. *Id*. "This process is repeated during oscillation to maintain oscillation about a resonant frequency." *Id*.

G. Overview of Motohashi

84. U.S. Patent No. 5,736,797 to Motohashi is titled, "Linear Oscillating Motor." APPLE-1024, Face. Motohashi was filed on May 31, 1996 and patented on April 7, 1998. *Id*. Motohashi generally pertains to a "linear oscillating motor

capable of assuring a consistent and effective feedback control of keeping a constant oscillation effective amplitude with varying load conditions." *E.g.*, *id.*, Abstract.

85. Motohashi teaches controller 60 that uses feedback control based on outputs from multiple sensors "for varying a time of supplying the electric current from a power source 61 to the electromagnet 20 through an inverter 63 in order to keep a constant oscillation amplitude." APPLE-1024, 5:15-21. The overall system components are shown in FIG. 4, reproduced below:

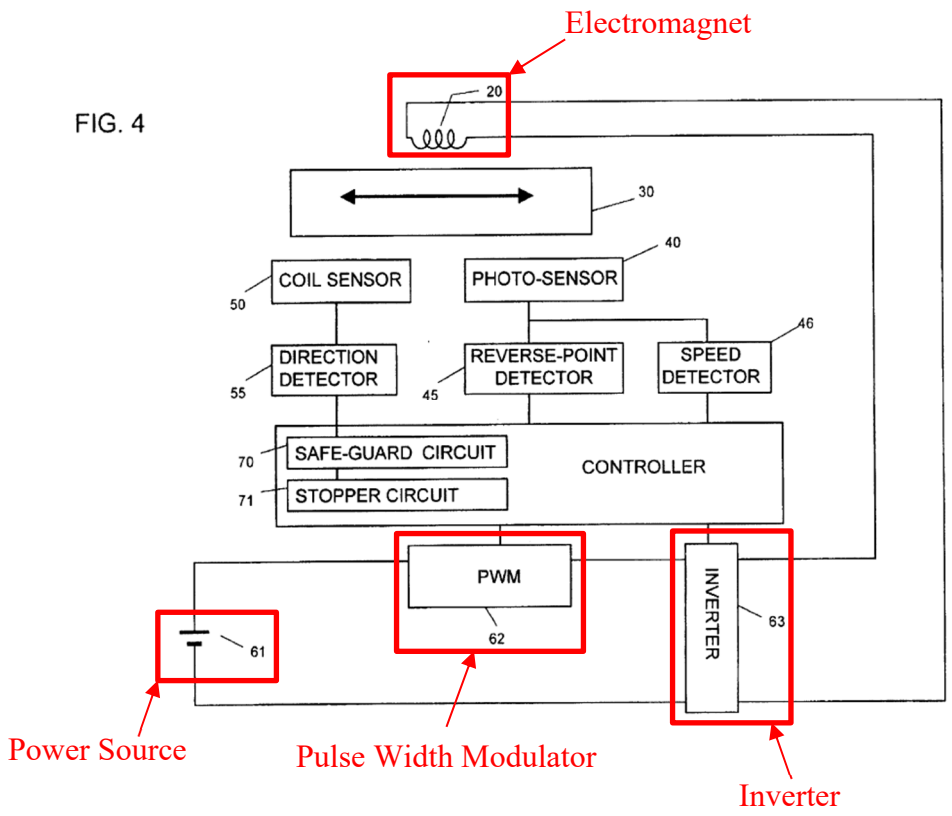

APPLE-1024, FIG. 4 (annotated)

As Motohashi describes, the "controller 60 is connected to a pulse width modulator

(PWM) 62 and the inverter 63 to vary a pulse-width of a drive pulse for feeding the electric current and to alternate the direction of the electric current being fed to the electromagnet 20." APPLE-1024, 5:21-25.

H. Overview of Amaya

86. U.S. Patent No. 5,955,799 to Amaya is titled, "Linear Vibration Motor and Method for Controlling Vibration Thereof." APPLE-1025, Face. Amaya was filed on February 25, 1998 and issued as a patent on September 21, 1999. *Id*. Amaya, like other references discussed herein, teaches that it can be "preferable to vibrate the vibration system in synchronization with a characteristic (resonant) frequency of the vibration system." *E.g*., APPLE-1025, 5:1-3.

87. Amaya provides a "linear vibration motor" described mainly for "a reciprocating type electric shaver" but applicable to any other products. APPLE-1025, 3:58-62. Similar to Wakuda's actuator, Amaya's vibration motor includes a frame 3, a reciprocator assembly 2 with a permanent magnet 20, springs 4, 28, a coil 11, and a sensor 39. *Id.*, 3:62-4:67, Figure 7 (below).

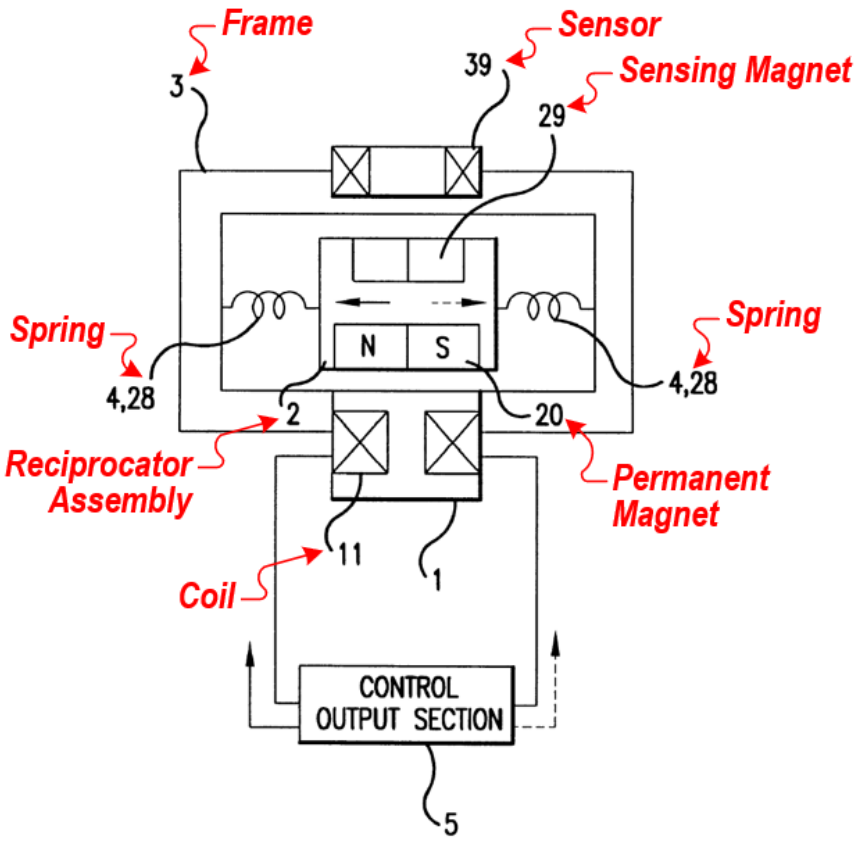

APPLE-1025, Figure 7 (annotated)

88. Amaya's vibration motor further includes "a detection system" including a sensing magnet 29 and a sensor 39, "which detects a characteristic of the vibration system indicative of the resonant frequency thereof under current load conditions," and "a control system" including a control output section 5, "which is responsive to feedback signals generated by the detection system to control the magnitude and direction of the current flowing through the coil 11 in such a manner as to maintain resonant operation of the vibration system." APPLE-1025, 5:5-23.

89. Notably, Amaya, like other references discussed herein, teaches that it can be "preferable to vibrate the vibration system in synchronization with a characteristic (resonant) frequency of the vibration system." *E.g.*, APPLE-1025, 5:1-3.

90. To operate at resonance, Amaya describes "a control system which is responsive to feedback signals generated by the detection system to control the magnitude and direction of the current flowing through the coil 11 in such a manner as to maintain resonant operation of the vibration system." APPLE-1025, 5:9-13. The control system "adjusts the magnitude and/or direction of the driving current flowing through the coil 11 in accordance with the value of the feedback signal, to thereby maintain operation of the vibration system of the linear vibration motor at the resonant frequency, i.e., to maintain the resonant condition of the vibration system." *Id.*, 6:12-18. As an example, when there is a reduction in the amplitude of the reciprocating vibration, the control output will "increase the driving current." *Id.*, 6:19-29. A POSITA would have recognized from Amaya that the frequency of reciprocation could have also been controlled by repeatedly changing the direction of the driving current flowing through the coil 11.

91. Amaya, like other references discussed herein, also uses an H-bridge switching circuit to drive the coil, as shown in FIG. 11, reproduced below:

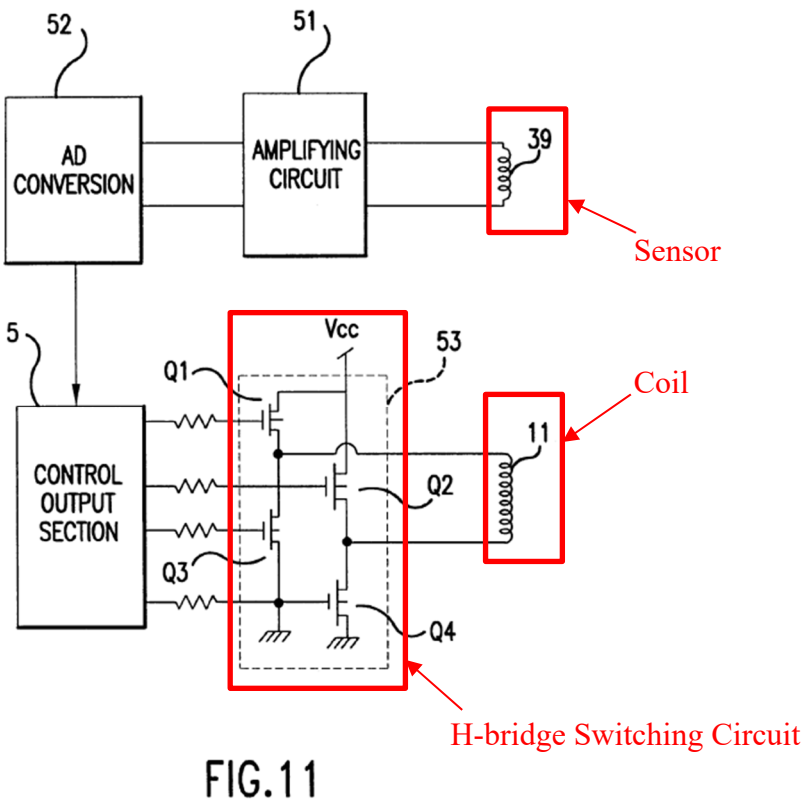

APPLE-1025, FIG. 11 (annotated)

Amaya describes the driver 53 as including "four FET Switching devices Q1-Q4." APPLE-1025, 6:42-43. "By turning on either the switching devices Q1 and Q3 or the switching devices Q2 and Q4, the direction of the current flowing through the coil 11 can be switched, to thereby facilitate reciprocating movement of the reciprocator assembly 2." *Id.*, 6:43-47.

VIII. GROUND 1: The Wakuda-Ramsay Combination Renders Obvious Claims 1-4 (Plain-and-Ordinary Meaning and Patent Owner's Means-Plus-Function Construction)

92. For the reasons I describe in detail below, and based on my review of the '337 patent and its file history, and the prior art references cited herein, a

POSITA would have plainly understood that the teachings of Wakuda and Ramsay render obvious claims 1-4 according to its plain and ordinary interpretation and Patent Owner's means-plus-function construction.

A. The Predictable Combination of Wakuda and Ramsay

93. In the Wakuda-Ramsay predictable combination, Wakuda's system would be implemented to enable a user to customize parameters associated with haptic effects, as taught by Ramsay. The resulting system provides Wakuda's "small-sized terminal devices, such as portable telephones, PDA, portable game equipment[]," that are implemented to store the customized haptic effects to be selected and used in generating desired haptic feedback. *Id.*; APPLE-1005, 1:11-14. Further, Wakuda-Ramsay's terminal device would include "input/output devices" as equipped in Ramsay's "end user device" that is similar to Wakuda's terminal device. APPLE-1006, [0019], [0022]-[0024]. Ramsay would have modified Wakuda's haptically-enabled system to embed "[s]oftware and systems" in the system "according to the teachings [of Ramsay], to lead a user through the process of entering and/or modify parameters and characteristics of haptic tracks." APPLE-1006, [0015]. In particular, the memory device in the Wakuda-Ramsay combination (e.g., Ramsay's memory 16) would store "a software program for enabling an end user to create and/or modify haptic effects, the software program of which can be executed by processor,' and would "also store haptic track files

created or modified by the user and can also store mixed track files, which include multiple haptic tracks combined together." APPLE-1006, [0025], [0027]-[0028]. Further, the resulting system would allow users to "access[] programmable haptic design software 30 via GUI 24 and open[] a file to be edited," and to "interact with programmable haptic design software 30 by input and output mechanisms of GUI," as taught by Ramsay. APPLE-1006, [0037].

94. A POSITA would have been motivated and found it obvious to modify Wakuda's vibration generator system to be user-configurable as described in Ramsay for several reasons. In particular, as discussed in Ramsay, a POSITA would have recognized that the capability of modifying characteristics of haptic feedback was normally limited to professional haptics designers, and that end users "typically [did] not have the option on the device itself to modify characteristics of haptic feedback." APPLE-1006, [0014]. Therefore, a POSITA would have looked for references like Ramsay to expand the functionalities of then-existing haptic devices and allow end users to have capabilities to freely create and customize haptic effects to their liking. APPLE-1006, [0014]-[0015]. Therefore, a POSITA would have been motivated to provide Wakuda's system with user tools as taught by Ramsay to achieve the benefits of offering flexibility to end users in customizing haptic effects to their liking. APPLE-1006, [0014]-[0015]. Ramsay's technique allows users to conveniently "create or modify the haptic effect files

directly on the device." *Id.*, [0014]. A POSITA would have recognized that the resulting system can benefit from Ramsay's GUI that displays haptic tracks and offers various, easy-to-use mechanisms for adjusting haptic parameters. APPLE-1006, [0053]-[0057].

95. Further, the Wakuda-Ramsay combination would enable the resulting system to "provide a fuller haptic experience" by allowing users to "combine or mix different haptic tracks together if desired." APPLE-1006, [0030]. Indeed, Ramsay discloses various options to create mixed tracks by allowing users to "combine haptic tracks to play simultaneously, to overlap in time for a portion of the time, to play end-to-end, or even to start a subsequent track after a short pause at the end of a first track." *Id.*, [0047]. A POSITA would have recognized that vibrant and interesting haptic effects would result from the combination that enables independent controlling of the frequency and amplitude for oscillation. *See* APPLE-1018, 224 ("For tactile applications, electrodynamic actuators appear only with linear moving coils or magnets as oscillation sources. The possibility to control frequency and amplitude independently from each other makes them interesting for tactors.").

96. Additional reasons would have prompted a POSITA to implement Wakuda's vibration generator system to store haptic effects, in accordance with Ramsay's teachings, so that the parameters of a haptic effect, such as frequency

and amplitude, are specified in the stored values. For example, storing haptic effects in the resulting system would further achieve Wakuda's purposes of "realizing a variety of vibrations" and "freely set[ting] a configuration of vibrations." APPLE-1005, 1:11-16, 1:58-64, 2:13-17, 3:22-30.

97. A POSITA would have had a reasonable expectation of success in making the proposed modifications given that Wakuda and Ramsay describe the same techniques for controlling a linear actuator to produce desired output. APPLE-1005, 3:42-44 ("the movable body reciprocates linearly"); APPLE-1006, [0026]. Indeed, a POSITA would have recognized that the Wakuda-Ramsay combination requires only routine knowledge of software implementation techniques, which were well within the POSITA's skill. The modification to Wakuda based on Ramsay's teachings merely involves implementing Ramsay's software solutions in Wakuda's hardware setup without substantially changing Wakuda's other structures.

98. In particular, the combination would modify Wakuda's system only to the extent that it is necessary to implement Ramsay's software tools, and Wakuda's system would otherwise remain unchanged and perform its intended operations. In fact, Wakuda and Ramsay share similar structures and operations that are compatible. *Id.* For example, while Wakuda already discloses or renders obvious the frequency and amplitude being specified by the stored values (see Ground 1A,

[1f]), Ramsay similarly discloses that "the customized haptic effects created by a user can be stored on the device for use by the user." APPLE-1006, [0017], [0027], [0028]. Further, a POSITA would have recognized that the purposes intended by Wakuda and Ramsay (e.g., providing haptic feedback) are compatible, and the Wakuda-Ramsay combination would have accomplished those in a similar way that each of Wakuda and Ramsay achieves. *Id.* Moreover, the intended operations in each of Wakuda and Ramsay would be achievable in parallel to receive the benefits described by each reference. *Id.* As such, combining Wakuda and Ramsay was merely the application of known techniques (Ramsay's software solution for user's customization of haptic effects) to a known device (Wakuda's vibration generator system) ready for improvement to yield predictable results (benefits articulated above).

B. Analysis Of Wakuda-Ramsay With Respect To Claims 1-4, 7, 8, 14, 15, 17, 19, and 20

99. As shown in this section, Wakuda-Ramsay provides all elements of claims 1-4.

Claim 1

[1pre] A linear vibration module comprising:

100. Based on my review, the Wakuda-Ramsay combination renders the preamble obvious. In particular, the Wakuda-Ramsay combination provides a linear vibration module, such as Wakuda's "bodily sensed vibration generator

system mountable on small-sized information terminal devices, such as portable telephones, PDA, portable game equipment[], and so on." APPLE-1005, 1:11-16. According to Wakuda, the system includes "vibration generator means 1" that includes "casing 2," "covers 3," "coil 5," "movable body 6," and "control means 10." APPLE-1005, 4:30-5:24, 6:11-62. Wakuda's "movable body reciprocates linearly." *Id.*, 3:43-45. In the Wakuda-Ramsay combination, the vibration module further includes "input/output devices" as taught by Ramsay. APPLE-1006, [0022], [0024]; §VIII.A (combination of Wakuda and Ramsay).

101. More specifically, Wakuda describes "a bodily sensed vibration generator system mountable on small-sized information terminal devices, such as portable telephones, PDA, portable game equipment[], and so on, and more particular, to a bodily sensed vibration generator system, which is small in size and capable of realizing a variety of vibrations." APPLE-1005, 1:11-16. In Wakuda's vibration generator, "the movable body reciprocates linearly." *Id.*, 3:42-44. Therefore, a POSITA would have understood and found obvious that the resulting system, which is in a form of "terminal devices," is a vibration module. Alternatively, a POSITA would have considered the vibration generator system included in such "terminal devices" to be a vibration module. *Id.*

[1a] a housing;

102. Based on my review, the Wakuda-Ramsay combination provides a housing within the resulting system. For example, Wakuda's "vibration generating means" includes "a cylindrical-shaped casing 2 made of a magnetic substance as a support, and covers 3, 3 made of a non-magnetic substance and being mountable on both ends of the casing." APPLE-1005, 4:34-38.

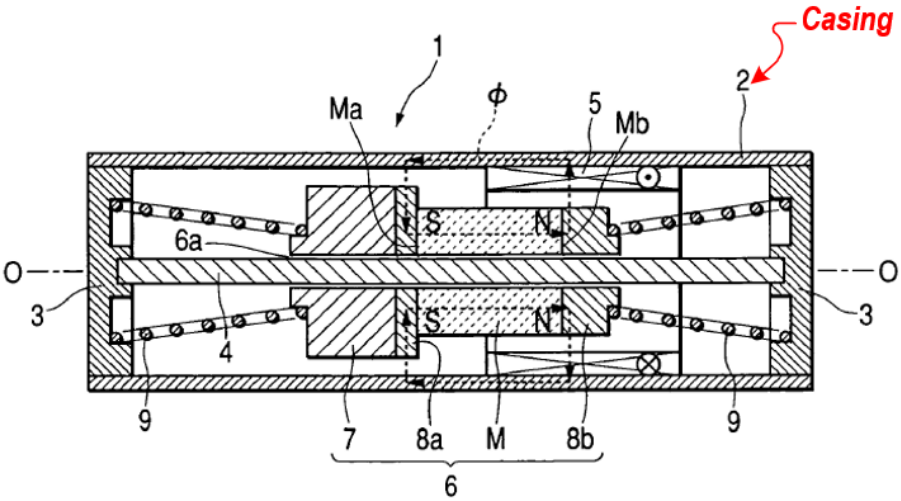

APPLE-1005, Figure 1B (annotated)

103. In addition, Wakuda describes that its vibration generator system is mounted at "small-sized information terminal devices, such as portable telephones, PDA, portable game equipment[]." APPLE-1005, 1:11-16. It would also have been understood that such terminal devices have a housing. Indeed, Grant describes "a housing of the computer or handheld device" that incorporates an actuator. APPLE-1007, [0010].

[1b] a moveable component;

104. Based on my review, the Wakuda-Ramsay combination provides a moveable component within the resulting system. For example, Wakuda's vibration generator system includes "movable body 6" (moveable component) that "is provided inside the casing 2." APPLE-1005, 4:48. Wakuda's movable body includes "a weight 7 made of a non-magnetic substance and "a magnet M" that "is provided on both end surfaces thereof with yoke members 8a, 8b, which are formed from a magnetic material." *Id.*, 4:48-54. "The weight 7, yoke member 8a, magnet M, and the yoke member 8b are column- or disk-shaped, and all outer peripheral surfaces thereof are positioned in circles concentric with a center of the shaft 4." *Id.*, 4:54-57.

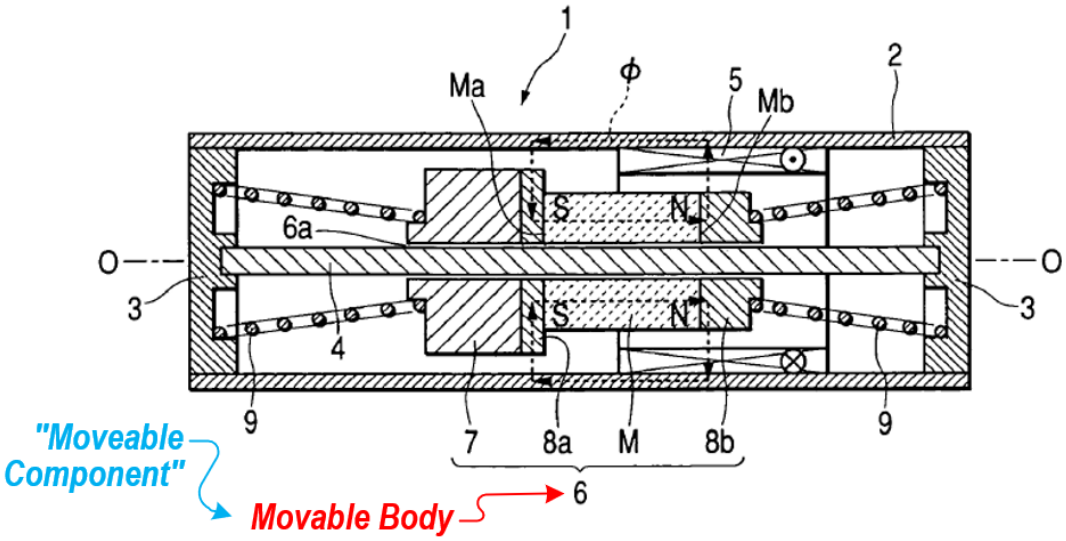

APPLE-1005, Figure 2 (annotated)

[1c] a power supply;

105. I note that the Wakuda-Ramsay combination provides a power supply within the resulting system. For example, Wakuda's system includes a "coil 5." APPLE-1005, 4:42-47. Referring to Figure 1 below, Wakuda describes that current is supplied to the coil to generate a magnetic force. *Id.*, 6:4-10 ("when current in a direction shown in FIG. 1B is given to the coil 5, a magnetic force F is generated by the magnetic flux φ and the current in the X2 direction to be able to give to the movable body 6a driving force in the X2 direction."). With these teachings, a POSITA would have understood and found obvious that Wakuda's system includes a power supply to supply "current" to the coil.

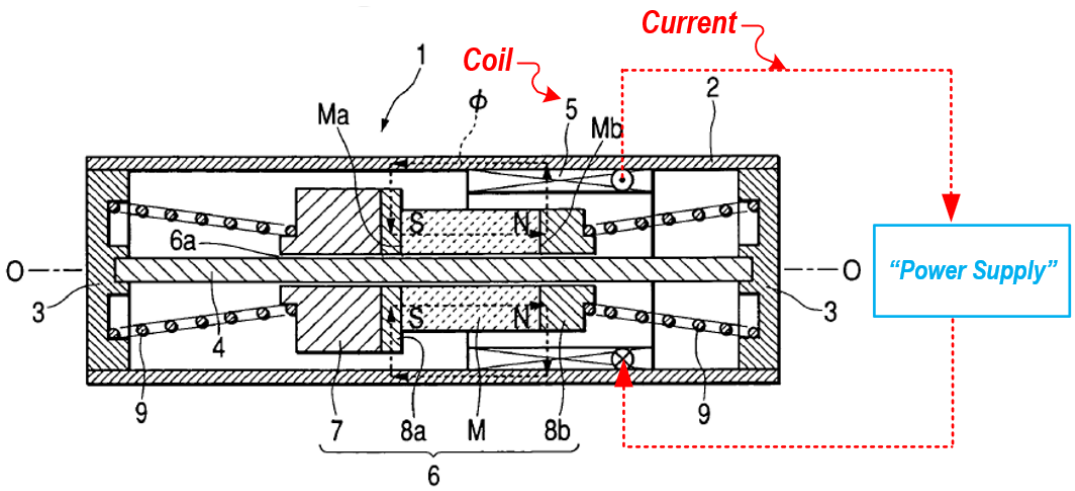

APPLE-1005, Figure 2 (annotated)

106. Indeed, it was well-known that Wakuda's "terminal devices, such as portable telephones, PDA, portable game equipment[], and so on" included a battery or was designed to connect to an external power source to supply power to components internal to the system. APPLE-1005, 1:11-14. Further, a POSITA

would have understood and found obvious that an actuator for a haptic feedback device is coupled to a power supply for the purpose of providing electrical power. APPLE-1019, 5:35-37 ("Power supply 40 can optionally be coupled to actuator interface 38 and/or actuators 30 to provide electrical power."); APPLE-1007 ("Grant"), [0048], [0066], [0103]. For example, Grant describes that its "portable computer 10 including a haptic touchpad" is "powered by batteries or other portable energy source in addition to other more stationary power sources." APPLE-1007, [0048]. Grant further describes that "power for the actuators can be drawn off a bus connecting the computer to the touchpad (or touch screen)." *Id.*, [0066], [0103].

[1d] user-input features;

107. Based on my review, the Wakuda-Ramsay combination provides user-input features within the resulting system. For example, Wakuda describes "small-sized information terminal devices, such as portable telephones, PDA, portable game equipment[], and so on," on which the vibration generator system is mounted. APPLE-1005, 1:11-16. Similar to Wakuda's terminal devices, Ramsay describes "end user device 10," such as "mobile handset, cell phone, personal digital assistant (PDA)," etc. APPLE-1006, [0019]. Ramsay's "[e]nd user device 10 ... includes input/output devices 12," which includes "one or more input mechanisms, which may include any suitable combination of keyboards, keypads,

cursor control devices, computer mice, voice activation mechanisms, touch screen with respective stylus or other drafting instrument, touch pads, buttons, sliders, microphones, digital cameras, etc." APPLE-1006, [0022], [0024].

108. Therefore, it would have been understood and found obvious that Wakuda-Ramsay's device includes user-input features as taught by Ramsay's "input/output devices." A POSITA would have understood and found obvious that such terminal devices have well-known user-input features, such as keypads, buttons, switches, or touch-sensitive screens, for receiving user inputs and thereby allowing users to conveniently interact with the devices. APPLE-1010 ("Lacroix"), [0014] (describing a cellular telephone 10 including keys 13, which may be "mechanical type keys" or "implemented by a touchscreen or other type of touch sensitive surface so that keys 13 are touchscreen keys, or can be implemented using any method").

[1e] a driving component that drives the moveable component in each of two opposite directions within the housing;

109. Based on my review, the Wakuda-Ramsay combination provides the recited driving component within the resulting system. As shown in [1c] above, Wakuda's vibration generator system includes the coil as a driving component, which is "fixed to an inner wall of the casing 2" (within the housing) and generates a driving force in each of two opposite directions, such as X1 and X2 directions in Wakuda's Figure 1A. For example, "when current in a direction shown in FIG. 1B

is given to the coil 5, a magnetic force F is generated by the magnetic flux φ and the current in the X2 direction to be able to give to the movable body 6 a driving force in the X2 direction. Also, a driving force in the X1 direction can be given to the movable body 6 by feeding a reverse current to the coil 5." APPLE-1005, 6:4-10, Figures 1A-1B.

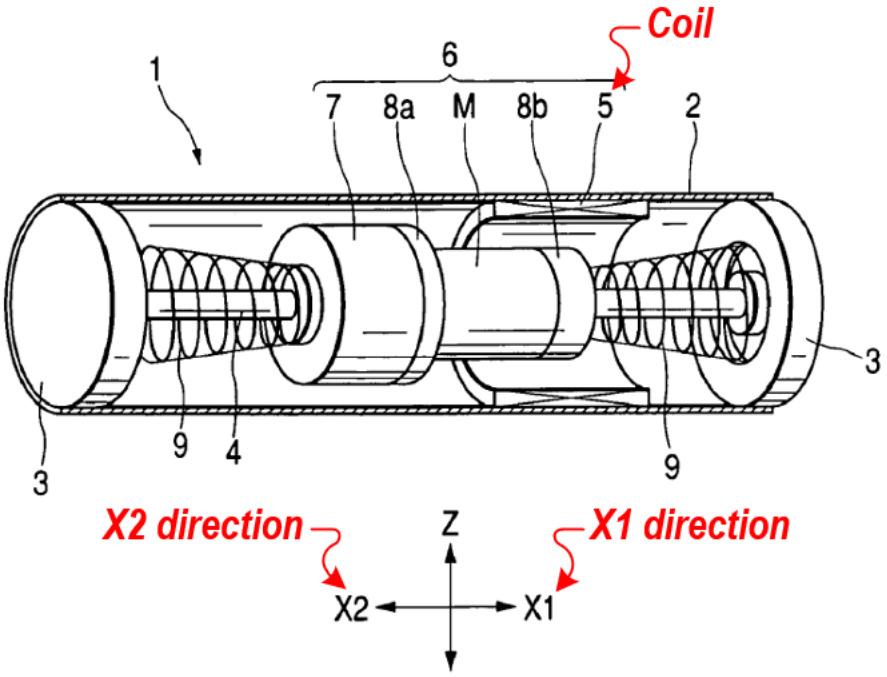

APPLE-1005, Figure 1A (annotated)

[1f] a control component that controls supply of power from the power supply to the driving component to cause the moveable component to oscillate at a frequency and an amplitude specified by user input received from the user-input features; and

110. Based on my review, the Wakuda-Ramsay combination provides the recited control component within the resulting system. In particular, Wakuda describes "control means 10" as a control component. APPLE-1005, 6:23-39.

Wakuda's control means includes "signal generation means 12" that "generates a drive signal S1 on the basis of a command from the vibration control means 14 to output the same to the drive means 13." *Id.*, 6:23-39. According to the drive signal S1, the drive means 13 provides "a drive current having a predetermined waveform ... to the terminal Ta1 and the terminal Ta2 of the coil 5. *Id.* Because the drive means 13 supplies the drive current to the coil of the vibration generating means, a POSITA would have readily understood and found obvious that the drive means 13 includes, or is coupled to, the power supply (see [1c]), and that the control means (control component) controls, via the drive signal S1, the supply of current (supply of power) from the power supply, which is included in or coupled to the drive means 13, to the coil (moveable component (see [1b])). *See* APPLE-1005, Figures 3-4 (below). Indeed, "the signal generation means 12 performs control, such as switching of current direction of the drive signal S1 or the like," which is an apparent example of controlling supply of power from the power supply to the driving component. APPLE-1005, 6:45-47.

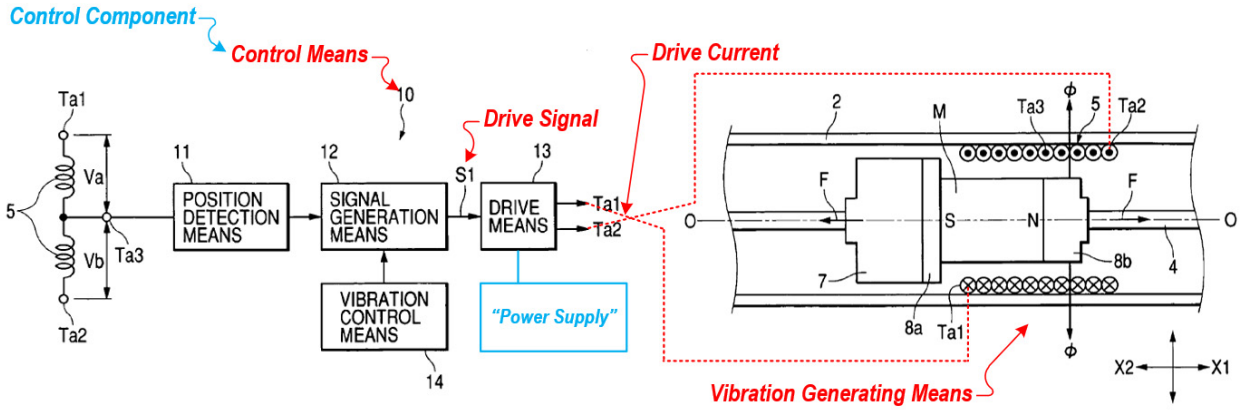

APPLE-1005, Figures 3 (left) and 4 (right) (annotated)

111. As I discussed with respect to [1c] above, Wakuda describes applying current in opposite directions (X1 and X2 directions) to generate driving forces in opposite directions and cause the movable component oscillate. APPLE-1005, 6:4-10 ("when current in a direction shown in FIG. 1B is given to the coil 5, a magnetic force F is generated by the magnetic flux φ and the current in the X2 direction to be able to give to the movable body 6 a driving force in the X2 direction. Also, a driving force in the X1 direction can be given to the movable body 6 by feeding a reverse current to the coil 5."). Further, Wakuda describes that the oscillation occurs at a frequency and an amplitude because the drive signal is configured such that "a vibrational waveform of the movable body makes an envelope" and "the envelope can be changed in frequency and amplitude, so that it becomes possible to generate a variety of vibrations." APPLE-1005, Abstract; *see also* 2:18-46 ("changes in an envelope, which connects peaks of amplitude of the movable body"; "[a] frequency of the envelope is in a lower band than a natural frequency. The envelope is varied whereby changes in intensity of vibrations are given to humans."), 9:12-10:42.

112. Furthermore, in the resulting system, the frequency and amplitude for oscillation are specified by user input received from the user-input features (Ramsay's on-device user interface that allows a user to input frequency and

amplitude). APPLE-1006, [0005], [0015]. In particular, the Wakuda-Ramsay vibration module includes "on-device" "graphical user interface (GUI)" with a menu option, as taught by Ramsay. APPLE-1006, [0015], [0024], [0032], [0053]. Ramsay describes that, through GUI, "[c]ertain parameters or characteristics of a haptic output or haptic track can be created, entered, changed, modified, etc." and that such "modifiable parameters may include a frequency of vibration and amplitude of vibration." APPLE-1006, [0030]-[0033], [0046], [0053]-[0055]. Therefore, a POSITA would have understood and found obvious that, through the GUI, the user can set and modify various parameters including "a frequency of vibration and amplitude of vibration."

113. In addition, Ramsay's "end user device 10," which "can be a haptic-enabled device that provides haptic feedback to the user during specific events," includes "processor 14" and "memory 16" as the control component for operating "haptic actuating device 18." APPLE-1006, [0020], [0022]. "[P]rocessor 14 controls the functions of end user device 10 and can execute software stored in memory 16." *Id.*, [0024]. Memory 16 stores "[f]iles associated with haptic effects". *Id.*, [0027]. A POSITA would have understood and found obvious that, in the Wakuda-Ramsay combination, Wakuda's control component ("control means 10") is implemented in accordance with Ramsay's teachings of processor and memory.

[1g] flux paths comprising a paramagnetic material that is shaped and positioned to reduce the reluctance of one or more magnetic circuits within the linear vibration module.

114. In the Wakuda-Ramsay combination, the vibration module would include the flux paths in the resulting system, as taught by Wakuda. For example, Wakuda renders obvious a magnetic flux φ created in the resulting actuator—Wakuda's "vibration generating means" structure. *See*, §VIII.A (Wakuda-Ramsay combination). In particular, the "magnetic flux φ generated by the magnet M are output through one of the yoke members 8b in an outer peripheral direction to traverse the coil 5 perpendicularly to reach the casing 2." APPLE-1005, 5:56-59. "Further, the magnetic flux φ form a magnetic path, along which the flux pass inside the casing 2 made of a magnetic substance to be conducted to a position opposed to the other of the yoke members 8a, and are output toward the yoke member 8a from the position to reach the S pole of the magnet M." *Id.*, 5:59-64. Notably, to create this magnetic path, Wakuda requires that the casing 2 and the yoke members 8a, 8b of the Wakuda-Ramsay's actuator be "made of a magnetic substance" or "formed from a magnetic material." *Id.*, 4:34-36, 4:51-54.

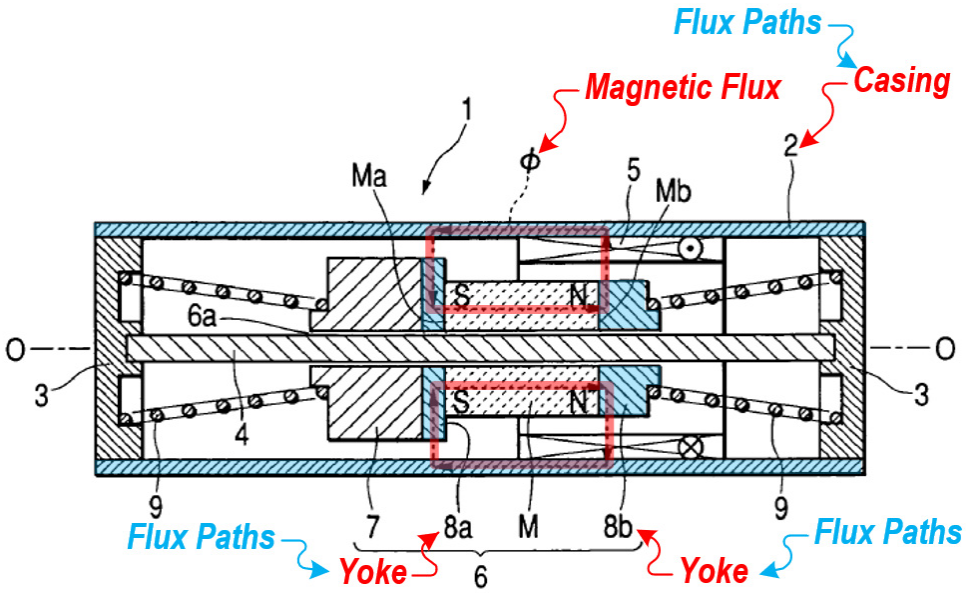

APPLE-1005, Figure 1B (annotated)

115. A POSITA would have understood and found obvious that, in the resulting actuator, the casing, alone or along with the yoke members, would correspond to the flux paths because the casing and the yoke members are made of magnetic substance/material, thereby reducing the reluctance of the magnetic path defined at the actuator (magnetic circuits within the vibration module) despite air gaps between the components (e.g., the casing 2 and the movable body 6 in Wakuda) of the actuator. APPLE-1005, 4:34-36, 4:51-54. Indeed, the concept of reluctance of a magnetic circuit that can be increased by air gap was well-known before the Critical Date. APPLE-1012, 27, 37. Therefore, it was well-known and obvious to shape and position the components of an actuator (or the materials thereof) that define a magnetic path such that the components reduce magnetic reluctance and increase magnetic flux.

116. In addition, a POSITA would have understood and found obvious that a paramagnetic material would be beneficially used for Wakuda's "magnetic material" for the casing 2 and the yoke members 8a, 8b of the Wakuda-Ramsay's actuator. APPLE-1005, 4:34-36, 4:51-54, 5:56-64. Indeed, paramagnetic materials are one of a few categorical options for magnetic materials. APPLE-1032 (describing paramagnets as one of four types of magnetic material); APPLE-1035; APPLE-1037. Further, a POSITA would have readily recognized that aluminum was a known example of a paramagnetic material, and that aluminum was widely used for the housing of haptic feedback actuators and user devices employing the actuators, which can be involved in creating a path for magnetic flux. APPLE-1031, 21:61-66; APPLE-1013, 9:36-39 ("The casing may be made from any rigid material, or variety of materials, such as aluminum[.]").

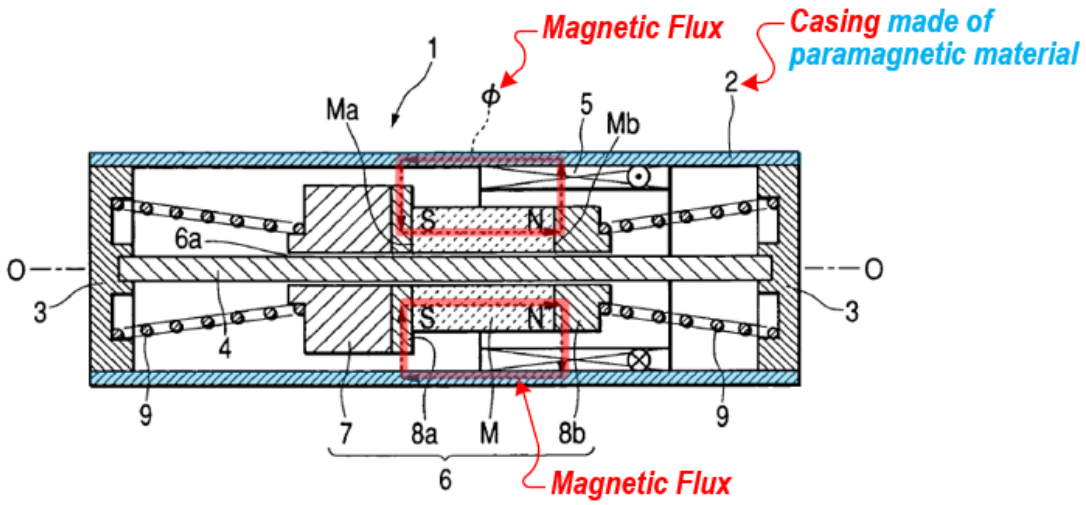

APPLE-1005, Figure 1B (annotated)

117. A POSITA would have been motivated to implement the material of the casing of Wakuda-Ramsay's actuator using a paramagnetic material (e.g., aluminum) to achieve known advantages. Wakuda describes that, in the Wakuda-Ramsay combination, the casing is "made of a magnetic substance as a support." APPLE-1005, 4:34-36. Further, "the magnetic flux φ form a magnetic path, along which the flux pass inside the casing 2 made of a magnetic substance to be conducted to a position opposed to the other of the yoke members 8a, and are output toward the yoke member 8a from the position to reach the S pole of the magnet M." *Id.*, 5:59-64, Figure 1B. Therefore, a POSITA would have been motivated to determine a desirable "magnetic material" for the casing of the vibration generating means such that the casing defines a part of the magnetic flux, as taught by Wakuda. APPLE-1005, 4:34-36, 5:59-64.

118. A POSITA would have been motivated to use a paramagnetic material (e.g., aluminum) for the casing of the Wakuda-Ramsay actuator for several reasons. As a first reason, a POSITA would have readily recognized that a paramagnetic material was a type of a "magnetic substance" mentioned in Wakuda and provided permeability that can define the magnetic flux as identified in Wakuda. *Id.*; APPLE-1032; APPLE-1035; APPLE-1037.

119. As a second reason, it was well-known that well-known paramagnetic materials, such as aluminum, is lighter than other popular magnetic materials like

iron and steel, making it a superior choice for applications where weight matters, such as Wakuda-Ramsay's portable handheld device. Therefore, a POSITA would have been motivated to use a paramagnetic material (e.g., aluminum) in the resulting system to better serve the objectives of Wakuda—namely, making portable handheld devices of small form factor. APPLE-1005, 1:11-14 ("mountable on small-sized information terminal devices, such as portable telephones, PDA, portable game equipment[], and so on[.]").

120. As a third reason, well-known paramagnetic materials (e.g., aluminum) were well-known to be naturally resistant to rust and corrosion, giving it a longer lifespan in harsh environments compared to other popular magnetic materials like iron and steel. APPLE-1027, 2 ("When it starts to corrode, aluminium forms an oxide layer, which is impervious to water and oxygen. Iron, on the other hand, forms a permeable oxide layer which allows both water and oxygen to pass through and keep attacking the underlying iron."; "The best way to protect iron or steel is to make an impervious layer on the metal and protect it the same way as aluminium does naturally. This is why engineers paint, grease, oil or tar steel to stop water and oxygen getting to the iron."); APPLE-1028, 1 ("[Aluminum is] often preferred over other metals because of its combination of strength, rust resistance, low weight, and ductility."). Therefore, a POSITA would have been motivated to choose such paramagnetic materials (e.g., aluminum) for

the casing of the resulting system, such as portable handheld devices, which are intended to be frequently exposed to various daily environments (e.g., high/low temperature, humidity, etc.).

121. As a fourth reason, a POSITA would have understood that paramagnetic materials (e.g., aluminum) are an excellent conductor of electricity and heat, making it suitable for various electrical applications such as the Wakuda-Ramsay's actuator system. APPLE-1029 (describing aluminum is 61% as conductive as copper); APPLE-1030 (describing aluminum having thermal conductivity of 0.50 (cal/sec)/(cm^2 C/cm) and 205.0 W/m K).

122. Lastly, the implementation of Wakuda-Ramsay's actuator to use paramagnetic materials would have been predictable because doing so was the application of known techniques (known materials for actuator elements) to a known device (Wakuda-Ramsay's actuator) ready for improvement to yield predictable results (benefits articulated above). A POSITA would have had a reasonable expectation of success in making the proposed modifications because the modifications would have been implemented by merely applying paramagnetic materials (e.g., aluminum) to Wakuda-Ramsay's actuator. The combination would modify Wakuda-Ramsay's actuator only to the extent that it is necessary to implement the material of the casing of the actuator, and Wakuda-Ramsay's actuator would otherwise remain unchanged and perform intended operations.

123. Notably, a POSITA would have readily understood that Wakuda's "magnetic path, along which the flux pass inside the casing 2 made of a magnetic substance" would achieve the same function as the '337 patent's "paramagnetic flux paths." APPLE-1005, 5:59-64; APPLE-1001, 13:52-67 ("lower-resistance path for magnetic flux, providing that they have adequate permeability and size to avoid saturation."). In fact, the '337 patent offers no evidence of unexpected results or a difference in function when using paramagnetic materials to define flux paths, other than what has been already achieved by Gregorio-Wakuda's solution ("magnetic substance" for the casing).

Claim 2

[2pre]-[2f] A linear vibration module comprising:

124. Elements [2pre]-[2f] are the same as [1pre]-[1f]. Therefore, the discussion with respect to [1pre]-[1f] above, which explains that Wakuda-Ramsay discloses the same limitations in claim 1, is incorporated herein by reference.

[2g] wherein the control component drives simultaneous oscillation of the moveable component at two or more frequencies to generate complex vibration modes.

125. Based on my review, the Wakuda-Ramsay combination renders obvious that the control component (see [1f]) causes the moveable component to simultaneously oscillate at multiple frequencies to thereby generate complex vibration modes. For example, Wakuda's vibration generator system operates the movable body at two frequencies, such as a natural/resonant frequency and an

envelope frequency that is lower than the natural frequency, thereby generating complex vibration modes. APPLE-1005, 2:18-46, 9:12-10:42, Figures 5-6.

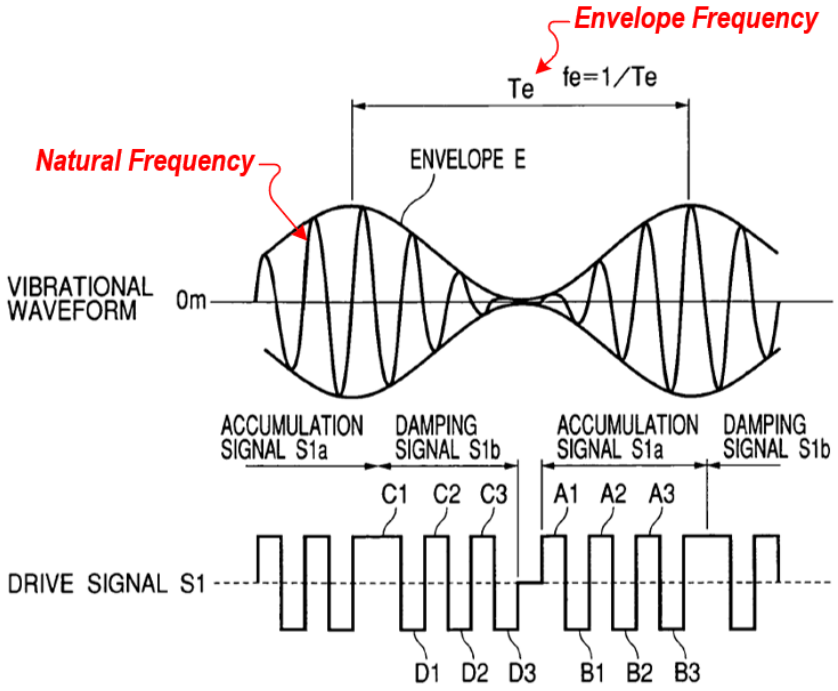

APPLE-1005, Figure 5 (annotated)

126. In addition, Ramsay describes that "one or <u>more</u> frequencies" can be entered for each haptic track. APPLE-1006, [0046]. Further, Ramsay enables users to "combine or mix different haptic tracks together if desired to provide a fuller haptic experience," and such mixed track files can be stored in memory. *Id.*, [0030], [0027]. Moreover, when multiple haptic tracks are mixed to overlap with one another in time, "two or more haptic tracks can be programmed to be simultaneous or partially overlapping in time in any desirable manner." *Id.*, [0047]. Through these teachings, a POSITA would have understood and found obvious that the Wakuda-Ramsay system would drive simultaneous oscillation of

the movable component at two or more frequencies, as included in a single haptic track or in a mixed track that combines multiple haptic tracks having different frequencies. A POSITA would also have recognized and found obvious that Ramsay's single haptic track having multiple frequencies or mixed haptic tracks with different frequencies combined would generate complex vibration modes, which would results in "a fuller haptic experience." APPLE-1006, [0030].

127. As noted above, I am aware that Patent Owner interpreted the term "control component" in claim 2 as a mean-plus-function limitation in co-pending litigation. Based on my review, the Wakuda-Ramsay combination provides one of Patent Owner's means-plus-function interpretations raised in the litigation—"microcontroller with internal or external memory; processor; CPU; microprocessor; and equivalents thereof." APPLE-1046, 12. In particular, a POSITA would have understood and found obvious that, in Wakuda-Ramsay, Wakuda's control component ("control means") is implemented based on Ramsay's teachings of processor and memory. For example, Ramsay's "end user device 10" includes "processor 14" and "memory 16" as the control component for operating "haptic actuating device 18." APPLE-1006, [0020], [0022]. "[P]rocessor 14 controls the functions of end user device 10 and can execute software stored in memory 16," which stores "[f]iles associated with haptic effects". *Id.*, [0024], [0027]. Further, Wakuda-Ramsay's "[p]rocessor 14 may be a

general-purpose or specific-purpose processor or microcontroller" and execute "programmable haptic design software" that "can be implemented in hardware, software, firmware, or a combination thereof" using, for example, "discrete logic circuitry, an application specific integrated circuit (ASIC), a programmable gate array (PGA), a field programmable gate array (FPGA), etc., or any combination thereof." APPLE-1006, [0025], [0043]. Therefore, a POSITA would have understood that Wakuda-Ramsay's teachings of the processor satisfies Patent Owner's above means-plus-function interpretation of "control component."

Claim 3

[3] The linear vibration module of claim 2 wherein the complex vibration modes include: a primary oscillation frequency modulated by a modulating oscillation frequency; a beat frequency; and an aperiodic oscillation waveform.

128. Based on my review, the complex vibration modes in the Wakuda-Ramsay combination include a primary oscillation frequency (natural/resonance frequency) modulated by a modulating oscillation frequency (lower envelope frequency in [2g]); a beat frequency (the difference between the resonance frequency and the lower envelope frequency); and an aperiodic oscillation waveform (irregular waveform illustrated in Wakuda's Figure 6).

129. In particular, Wakuda describes that the "vibrational waveform of the movable body 6" includes a natural/resonance frequency (primary frequency) and an envelope frequency defined by "a line connecting peaks of amplitude of the

movable body 6 together" and adjustable to be "bodily sensed." APPLE-1005, 9:12-48, Figure 5. Further, As in the '337 patent, the difference between the higher resonance frequency and the lower envelope frequency is the beat frequency. The '337 patent describes "a lower-frequency beat-wave form" that is produced by combining two driving frequencies, just like Wakuda's envelope that "connects peaks of amplitude of the movable body" being "excited at the natural frequency." APPLE-1001, 13:13-41; APPLE-1005, 2:29-46.

130. In addition, Wakuda contemplates the waveform of the envelope to be freely adjusted to be irregular and therefore aperiodic, by "changing contents of an accumulation signal S1a and a damping signal S1b" to create various feedback sensations. APPLE-1005, 9:49-62, Figure 6 (illustrating "the envelope E is shaped to abruptly rise and gently converge."), 3:12-14 ("By giving the inhibition signals and the reverse inhibition signals alternately, it is possible to abruptly damp vibrations to set the envelope in a steep shape.").

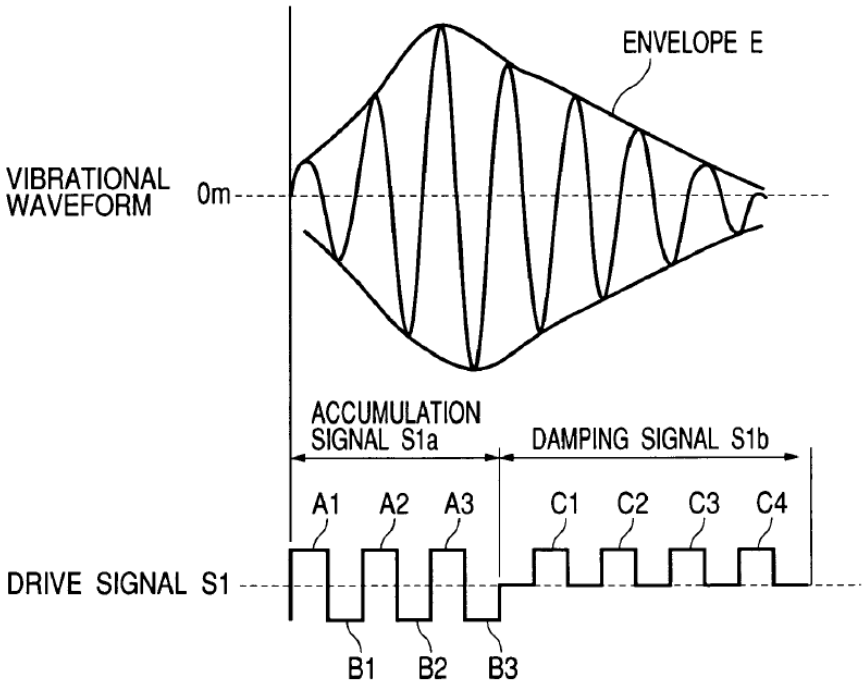

APPLE-1005, Figure 6

131. It also would have been obvious to use Wakuda-Ramsay's system to generate complex vibration modes that include additional aperiodic waveforms wherein the resonance frequency changes irregularly over time. It was well-known that the resonant frequency of an actuator can change depending on various factors, such as user's interaction with a haptic-enabled device. APPLE-1004, 3:50-55, 3:65-4:5, 2:5-9. As explained in Gregorio, the resonant frequency of the LRA can change depending on various factors, such as a user's interaction with a haptic-enabled device. For example, "when an LRA is mounted to a floating device (i.e., system 10 held softly in a hand), the LRA resonant frequency shifts up significantly. Further, significant frequency shifts can occur due to external factors

affecting the apparent mounting weight of LRA 18 in system 10, such as a cell phone flipped open/closed or the phone held tightly." APPLE-1004, 3:50-55. With this, Gregorio further discloses "constantly and dynamically determine[ing] the resonant frequency of [the] LRA" and adjusting the drive signal "to maximize the haptic feedback based on the determined resonant frequency." APPLE-1004, 3:65-4:5, 2:5-9. As a result, it would have been obvious to vary the resonant frequency of the Wakuda-Ramsay system's complex vibration mode when, for example, the user aperiodically changes the position of the device, how the device is held, and/or the shape of the device. The resulting waveform would have been an aperiodic waveform because the resonance frequency would change irregularly.

Claim 4

[4pre]-[4e]

132. Elements [4pre]-[4e] are the same as [1pre]-[1e]. Therefore, the discussion with respect to [1pre]-[1e] above, which explains that Wakuda-Ramsay discloses the same limitations in claim 1, is incorporated herein by reference.

[4f] a control component that controls supply of power from the power supply to the driving component to cause the moveable component to oscillate at a frequency and an amplitude that are independently specified by user input received from the user-input features.

133. As I discussed in [1f] above, Wakuda's or Wakuda-Ramsay's control component controls supply of power from the power supply to the driving component to cause the moveable component to oscillate at a frequency and an

amplitude specified by one or more stored values. In the Wakuda-Ramsay combination, such frequency and amplitude parameters are independently specified by user input received from the user-input features (an on-device user interface that allows the user to separately input frequency and amplitude as taught by Ramsay). APPLE-1006, [0005], [0015].

134. As taught by Ramsay, the Wakuda-Ramsay vibration module includes "input/output device" and "a graphical user interface (GUI)" or "GUI" that is provided on a "screen" and provides a menu option. APPLE-1006, [0024], [0032], [0053]; *see also* [0015] ("allow a user to create and/or modify the parameters associated with haptic feedback on the target device itself through <u>on-device means</u>," such as "<u>[s]oftware and systems</u> can be embedded in the end user devices") (emphasis added). Ramsay describes that, through GUI, "[c]ertain parameters or characteristics of a haptic output or haptic track can be created, entered, changed, modified, etc." and that such "modifiable parameters may include a frequency of vibration and amplitude of vibration." APPLE-1006, [0030], [0033] ("the parameters may include <u>frequency and amplitude characteristics</u> of a haptic output over a certain length of time."), [0046] ("For example, haptic track editing module 36 enables user to modify such features as the … <u>magnitude</u> … and other characteristics related to the waveform parameters with respect to time during which the haptic track is played. ***<u>In addition</u>***, haptic

track editing module 36 enables the user to enter <u>one or more frequencies</u> for the haptic track or even continually changing frequencies to be played along the length of the haptic track."); [0053] ("magnitude adjusting mechanism"), [0054] ("'magnitude' may be called amplitude"), [0055]. Therefore, a POSITA would have understood and found obvious that, through the GUI, the user can independently set and modify various parameters including "a frequency of vibration and amplitude of vibration." *Id.*

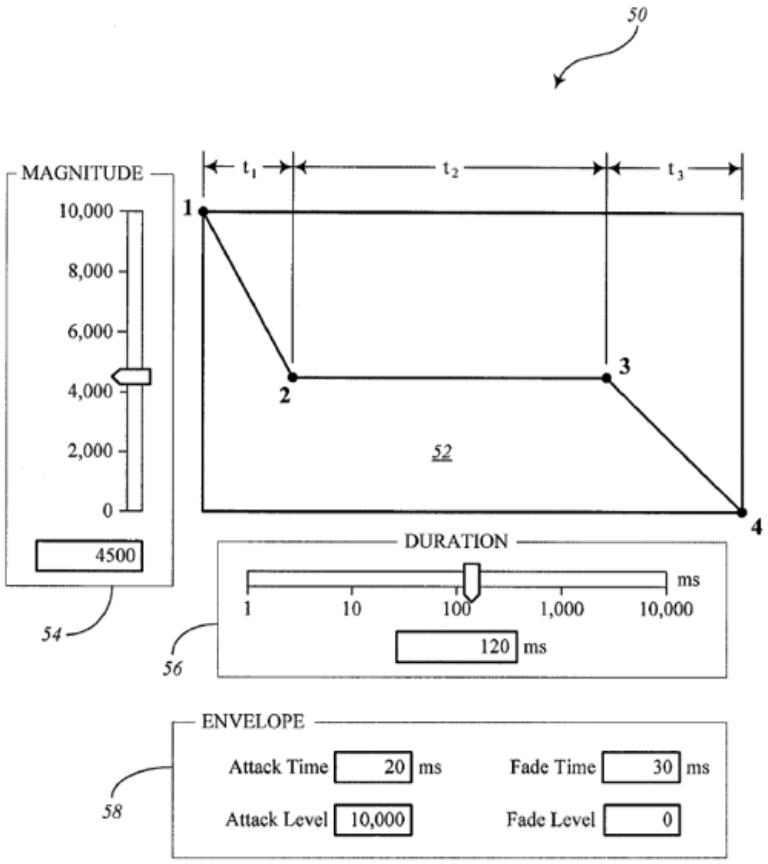

APPLE-1006, Figure 4

IX. GROUND 2: The Wakuda-Ramsay-Rossi-Aldrich Combination Renders Obvious Claims 1-4 (Both Parties' Means-Plus-Function Constructions)

135. For the reasons I describe in detail below, and based on my review of the '337 patent and its file history, and the prior art references cited herein, the Wakuda-Ramsay-Rossi-Aldrich combination includes all elements of claims 1-4 under the means-plus-function construction discussed above (refer to § III.C). I note that, for the same reasons I discussed above with respect to the Wakuda-Ramsay combination, a POSITA would have found it obvious to combine Wakuda and Ramsay. Additionally, a POSITA would have further found it obvious to implement the combination in accordance with Rossi's switch circuit and Aldrich's suggestions of a "hill-climbing" control algorithm to tune the frequency input to maintain oscillation at a resonant frequency.

136. I note here again that the '337 patent's claims are directed to control of known linear resonant vibration modules using known control components and circuitry. Wakuda provides a linear resonant vibration module having most features recited by the '337 claims. Ramsay, Rossi, and Aldrich provide additional known details that would have been readily implemented in the combined system.

A. The Predictable Combination of Wakuda-Ramsay and Rossi

137. In the predictable combination, Wakuda-Ramsay's actuator system includes a switch (e.g., H-bridge switch circuit) having a control signal input,

splitter and control signal inverter, in accordance with Rossi, that receives the control signal from the processor, in accordance with Wakuda-Ramsay's feedback control. Such a configuration would have yielded the predictable result of oscillating the actuator's magnet by switching the polarity of drive signals generated based on Wakuda-Ramsay closed-loop concepts for feedback control.

138. Several reasons would have motivated a POSITA to modify Wakuda-Ramsay's system based on Rossi's teachings of switch (e.g., H-bridge switch circuit). In fact, Wakuda describes applying current through the coil in opposite directions to drive the movable body in opposite directions. APPLE-1005, 6:4-10. A POSITA would have readily recognized that an H-bridge switch was a well-known example circuit to implement the Wakuda-Ramsay system's change in current flow to oscillate the movable body. APPLE-1023, 7:47-50 ("well-known H-bridge circuit").

139. Although Wakuda-Ramsay does not explicitly describe complete implementation details of a circuit for switching the "current flow direction/polarity," prior art systems such as Rossi demonstrated the conventional knowledge of implementing such a circuit (e.g., H-bridge) to provide oscillating power. *See, e.g.*, APPLE-1020, 1:65-2:11, 3:43-55, Figures 4, 6.

140. To be clear, the predictable combination is not relying on bodily incorporation of Rossi's components. The combination relies on suggestions

related to Rossi's H-bridge switch circuit control for alternating drive direction, which would have been predictably implemented in the Wakuda-Ramsay system.

141. A POSITA would have been motivated to implement a switch (e.g., H-bridge circuit) in accordance with Rossi's suggestions, in the Wakuda-Ramsay system for several advantages.

142. First, a POSITA would have been motivated to do so based on Wakuda's teachings to switch the current flow for driving the movable body in opposite directions. APPLE-1005, 6:4-10. Because Wakuda-Ramsay does not expressly disclose specifics of implementing the switching scheme, a POSITA would have predictably looked toward other teachings, such as Rossi, for implementation details in furtherance of Wakuda-Ramsay's objectives. Rossi plainly demonstrates the known benefits of an H-bridge that receives as input a drive signal (e.g., "IN1"), which is then split and inverted to generate complementary internal signals. APPLE-1020, Abstract, 1:65-2:49; 2:56-3:54; FIGS. 4, 6. A POSITA would have recognized the benefits from Rossi's straightforward teachings of providing complementary drive signals for respective sets of the four H-bridge transistors, such that current/voltage is applied in one of two opposite directions through the coil. Rossi explicitly indicates the predictable benefit of a configuration that is effective to "functionally switch the load L

between the supply node Vs, and virtual ground nodes," thereby reliably driving the movable magnet head of the actuator. APPLE-1020, 2:4-12.

143. Second, a POSITA would have been motivated to combine Wakuda-Ramsay and Rossi to avail the system of a simple, cost-effective, and reliable circuit design. For example, the resulting system would require a small number of components. In fact, the power demands of LRAs are very modest and thus switching devices are lightly loaded and more reliable. Rossi describes diodes within the H-bridge which protect the devices from high-voltage which can be applied at the LRA outputs from sources within or external to the LRA. A POSITA would have recognized, from Rossi's description, the benefits of controlling the four transistors of the H-bridge using a control signal from the "processor" that is split and inverted. Doing so reliably results in complementary internal signals (e.g., IN1 and $\overline{\text{IN1}}$), which would have promoted simplicity in the control signal generation and the circuit to deliver the drive signal to the coil.

144. Third, a POSITA would have been prompted to combine Rossi and Wakuda-Ramsay because doing so was the application of known techniques (Rossi's implementation of an H-bridge circuit) to a known device (Wakuda-Ramsay's system that operates to switch polarity of current) ready for improvement to yield predictable results (benefits articulated above). A POSITA would have had a reasonable expectation of success in making the proposed

modifications based on the similarity of the function of the H-Bridge switch circuit in Rossi and Wakuda-Ramsay, and because the modifications would have been implemented largely through routine circuit design considerations and software instructions for generating the control signal.

B. The Predictable Combination of Wakuda-Ramsay-Rossi and Aldrich

145. In the predictable combination, Aldrich's control algorithm is implemented in Wakuda-Ramsay-Rossi's system that utilizes sensor feedback to control vibration output about a resonant frequency. In the combined system, sensor outputs would have been processed using control algorithm techniques in accordance with Aldrich's suggestions, thereby achieving Wakuda's goal of "generat[ing] a drive signal S1 tracking the resonance frequency of the movable body." APPLE-1005, 10:27-32, 6:48-55. For example, to generate control signals that maintain oscillation at/near resonance, the drive frequency would have been incremented or decremented, and a currently measured vibration strength parameter, compared with a previously measured vibration strength parameter. APPLE-1021, 2. In accordance with Aldrich's suggestions, if the increment or decrement results in an increased vibration strength, then the direction of change (increase or decrease, respectively) of frequency is accepted and another such change (increment or decrement, respectively) is made during the following sampling period. *Id.* If the increment or decrement results in a decrease in

vibration strength, then the direction of change of frequency during the following sampling period is reversed. This is because the decreased vibration strength indicates that the frequency was incremented/decremented past the resonant peak.

146. Aldrich describes a process like the '337 algorithm described with reference to Figure 7A that Aldrich refers to as "hill-climbing," as I discussed previously (refer to § VII.F). As an initial matter, I note that a POSITA would have implemented Aldrich's hill-climbing technique in the combined system using a Boolean value to indicate whether the frequency was being increased. By doing so, the Boolean value indicates a current operational state of the hill-climbing algorithm. A POSITA recognized the use of Boolean values as a conventional way of tracking and maintaining the state of a system, and would have been selected as a matter of routine implementation based on Aldrich's suggestions for switching between incrementing and decrementing frequency. *See, e.g.*, APPLE-1026, 29 (discussing uses of Boolean variables that were conventional). Based on my knowledge and experience in the field, and my review of Aldrich, a POSITA would have predictably utilized a Boolean variable to track the operational state of the algorithm—here, to indicate a direction of change of frequency—based on Aldrich's description. APPLE-1021, 2 ("direction of change of frequency during the following sampling period is reversed").

147. Based on my knowledge and experience, and review of the prior art, a POSITA would have recognized that the software of the microprocessor of the combined system set local variables to default values. Doing so would have been a routine implementation detail so that control signals from the microprocessor were generated to produce a default oscillation. From there, consistent with Wakuda and Aldrich, the oscillation, and control signals driving the oscillation could then be adjusted as appropriate through feedback control. Likewise, such a technique would have been obvious from Wakuda and Aldrich, in order to effectively initiate operation and begin feedback control. Based on my knowledge and experience in the field, a POSITA would have been motivated to initialize the relevant variables to default values to promote reliable and predictable operation. For example, a POSITA would have known, as a matter of basic programming practices, that not initializing local variables could led to problematic results. I note that it is common practice in virtually all computer programming to initialize local variables to default values. In some computer systems, when a local variable is created, memory is assigned to the local variable but whatever random data was in that memory location is now in the corresponding local variable. In some other computer systems, local variables are always cleared to zero before execution. In either case, undesirable results such as freq set equal to a random number (unpredictable operation) or freq set to equal to 0 (undesirable operation) would

occur if the local variables were NOT initialized to default values. For this reason, a POSITA would initialize local variables to meaningful values as a matter of routine in programming. I also note that a POSITA would have known that initializing variables can also mean initializing or setting variables to user-defined initial states, which is a technique supported when implementing a vibrational system using a microprocessor and local memory, like in the combination. That is, the initialization would have been set in firmware and/or in software to facilitate initiation of operation in a predictable and repeatable manner.

148. Additionally, when implementing the linear resonant vibration module in accordance with Wakuda, Ramsay, and Aldrich, a POSITA would have been motivated to utilize integer values when processing sensor signals. The sensor signals from the sensors are converted to an integer value (e.g., by an analog-to-digital (A/D) converter), to facilitate digitally processing the signals, and to provide a conventional manner of data handling (integer values can be easier to handle digitally, including using hardware), and to facilitate efficient computation and processing of the force values represented by the sensor signals. APPLE-1021, 2. A POSITA would have readily recognized the efficiency and effectiveness of utilizing an integer value (e.g., versus a decimal/fractional value). Typically, sensor values in digital systems are first represented and stored as integer values. From there, the values may optionally be converted to non-integer

values (such as floats). A POSITA would have thus been led to use integer values, reducing the need for additional conversion to non-integer values. Additionally, a POSITA would have viewed the use of integer values as a mere design choice between either integer values or non-integer values. *Id*. A POSITA would further understand that converting an integer value to a representation such as floating point would add no information.

149. Again, the predictable combination is not relying on bodily incorporation of Aldrich's components. The combination relies on suggestions related to Aldrich's "hill-climbing control algorithm" for "tracking to find and remain within the vicinity of the resonance" (APPLE-1021 at 2), which would have been predictably implemented in the Wakuda-Ramsay-Rossi system.

150. Multiple reasons would have prompted a POSITA to implement a "hill-climbing" control algorithm, in accordance with Aldrich's suggestions, in the Wakuda-Ramsay-Rossi system.

151. First, a POSITA would have combined Wakuda-Ramsay-Rossi and Aldrich to avail the system of a known feedback algorithm for targeting a resonant frequency, thereby improving Wakuda-Ramsay-Rossi's system with the known benefits from the algorithm. Although Wakuda describes detecting a position of the movable body to generate a drive signal for driving the movable body in the manner that tracks the resonant frequency of the movable body, Wakuda generally

lacks implementation details of doing so. APPLE-1005, 6:40-62, 10:22-42. Understanding the shortage of details and thus attempting to implement and improve Wakuda-Ramsay-Rossi's monitoring/adjusting method, a POSITA would have predictably looked to other teachings such as Aldrich for such details, especially where Aldrich explicitly describes driving an actuator at/near resonance using such control algorithm techniques. APPLE-1021, 1-3.

152. Second, a POSITA would have combined Wakuda-Ramsay-Rossi and Aldrich to implement feedback control according to Aldrich's technique that continuously updates the control outputs throughout operation of the system. The algorithm continuously facilitates comparison of current and previous parameters throughout device operation so that the control outputs (e.g., frequency of the control signal) can be adjusted to maintain oscillation at/near resonance frequency, furthering the explicit objectives of Wakuda-Ramsay-Rossi and Aldrich.

153. Third, here again, this combination was the application of known techniques (Aldrich's "hill-climbing" feedback control algorithm) to a known system (Wakuda-Ramsay-Rossi's system that uses feedback control) ready for improvement to yield predictable results (benefits articulated above).

154. Moreover, a POSITA would have had a reasonable expectation of success in making the proposed modifications based on the applicability of Aldrich's method to the resonant system architectures in Wakuda-Ramsay-Rossi,

and because the modifications would be largely implemented via software executed by the microprocessor. In the combined system, sensor outputs would have been received and processed by Wakuda-Ramsay-Rossi's processor using at least a "hill-climbing control algorithm" "to find and remain within the vicinity of the resonance," in accordance with Aldrich's suggestions. APPLE-1021, 2. For example, it would have been obvious to a POSITA to modify Wakuda-Ramsay-Rossi's processor to include a control program based on Aldrich's algorithm. Implementing Aldrich's algorithm as a control program for applying continuous feedback control about a resonant frequency would have been a routine software change, requiring application of known coding techniques.

C. Analysis of Wakuda-Ramsay-Rossi-Aldrich With Respect To Claims 1-4

Claim 1

[1pre]-[1e]

155. As I discussed in Ground 1 above, the Wakuda-Ramsay-Rossi-Aldrich combination renders obvious [1pre]-[1d], as taught by, for example, Wakuda, Wakuda-Ramsay, and supporting evidence.

[1e] a driving component that drives the moveable component in each of two opposite directions within the housing;

156. Based on my review, the Wakuda-Ramsay-Rossi-Aldrich combination renders obvious [1e], as taught by, for example, Wakuda, Wakuda-Ramsay, and supporting evidence. *See* Ground 1. In particular, Wakuda-Ramsay's vibration

module includes a driving component ("coil 5") that drives the moveable component ("movable body 6") to oscillate within the housing ("casing 2"). APPLE-1005, 6:4-10, Figures 1A-1B.

157. I also note that the combination likewise includes a driving component according to the means-plus-function interpretation, as I discussed previously in my analysis of Element [1e] in Ground 1.

[1f] a control component that controls supply of power from the power supply to the driving component to cause the moveable component to oscillate at a frequency and an amplitude specified by user input received from the user-input features; and

158. The Wakuda-Ramsay-Rossi-Aldrich combination's vibration module includes the recited control component under the means-plus-function construction. As discussed in §III.C, I understand that the corresponding structure for "control component" is (1) a processor (e.g., microprocessor or CPU) and (2) a switch, the processor being programmed with (3) the algorithm described with respect to Figures 7A-7C of the '337 patent, and equivalents thereof.

159. As I discussed with respect to [1f] in Ground 1 above, Wakuda-Ramsay's system includes "processor 14" and "memory 16" as the control component, as taught in Ramsay. APPLE-1006, [0020], [0022], [0024] ("processor 14 controls the functions of end user device 10 and can execute software stored in memory 16."), [0027] (describing memory 16 stores "[f]iles associated with haptic effects").

160. Further, the combination includes a switch (e.g., H-bridge switch) as suggested by Rossi. A POSITA would have found it obvious, based on the Wakuda-Ramsay-Rossi-Aldrich combination, that the microprocessor is programmed to provide a control output to the H-bridge switch for controlling the direction of the drive signal through the coil (e.g., directional signal d). For example, a control signal is output from the microprocessor to a transistor of the H-bridge switch to control whether the transistor is in an open or closed state, providing the direction signal. In the resulting system, the switch receives a directional signal (e.g., at "IN1") that selects a corresponding direction of the two opposite directions in which the driving component drives the moveable component. APPLE-1020, 1:65-2:15; 3:44-55. Rossi describes that the "two pairs of switches (namely SW1, SW4 and SW2, SW3) arranged in a bridge configuration functionally switch the load L between the supply node Vs, and virtual ground nodes," dependent on the directions signal d received by the switch at "IN1." *Id.*

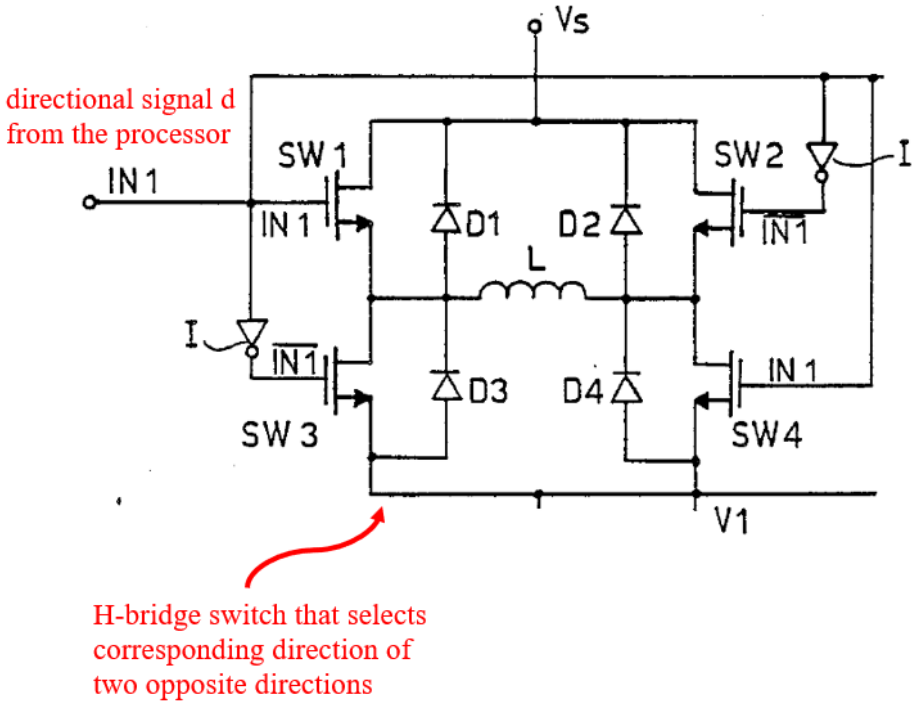

APPLE-1020, Figure 6 (partial, annotated)

161. Moreover, the Wakuda-Ramsay-Rossi-Aldrich combination provides that the processor is programmed with the algorithm described with reference to Figures 7A-7C of the '337 patent under the means-plus-function construction. *See* §III.C.

162. Step 702 of the '337 patent's algorithm begins execution upon a power-on event. APPLE-1001, 6:48-50. The software instructions of the processor of the combined system also begins execution upon a power-on event (e.g., invoked by a user through a power button or other user control). Indeed, the combined system includes user-input features as taught by Wakuda-Ramsay ([1d]),

which a POSITA would have readily recognized included a power on/off button and were used to power on/off the system. *See* analysis of [1d].

163. In step 702, "various local variables are [then] set to default values." APPLE-1001, 6:50-61 ("step 702" setting the mode, strength, lvo, lv1, freq, d, and inc variables to default values). Based on my knowledge and experience, and review of the prior art, a POSITA would have recognized and found obvious that the software of the processor of the combined system sets the same local variables to default values, so that the control signal is generated to produce oscillation, which are then adjusted as appropriate when implementing feedback control. Further, in the combined system, the default values (e.g., mode and strength) include values representing selections made by user input to the user-input features, as taught by Ramsay.

164. First, I note that it is common practice in virtually all computer programming to initialize local variables to default values. In some computer systems, when a local variable is created, memory is assigned to the local variable but whatever random data was in that memory location is now in the corresponding local variable. In some computer systems, local variables are always cleared to zero before execution. In either case, undesirable results such as freq set equal to a random number (unpredictable operation) or freq set equal to 0 (undesirable operation) would occur if the local variables were NOT initialized to default

values. For this reason, a POSITA would initialize local variables to meaningful values as a matter of routine in programming.

165. I note that a POSITA would have been motivated to set or initialize one or more local variables to default values. A POSITA would have recognized doing so as facilitating initiation of the actuator close to expected and/or user-selected operating parameters, and promoting reliable and consistent initiation of operation. I further note that doing so was well known at the time both in software in general (above) and within related technologies. *See, e.g.*, APPLE-1024, 5:25-37 ("At the start of the motor, the controller 60 allows to generate a few initial drive pulses of a fixed width at a fixed timing calculated in view of the natural frequency [i.e., resonance frequency] of the oscillator 30, until the oscillator 30 reaches a stable oscillation where a predetermined oscillation amplitude is accomplished. Thereafter, the controller 60 becomes responsible for determining a correct drive point of supplying the electric current in each half cycle of the oscillation as well as for varying the time of supplying the electric current, i.e., the pulse width of the drive pulse to keep the constant oscillation amplitude."); *see also* APPLE-1006, [0028] ("ROM 28 may be configured to store a library of preset haptic tracks that can be used as a general starting point for creating new tracks. In this case, the preset tracks can be protected from being overwritten in order to be available whenever the user wishes to create a new file. ROM 28 can also store

haptic track files created or modified by the user and can also store mixed track files, which include multiple haptic tracks combined together. The user is given the capability to assign new filenames to newly created or modified haptic track files and mixed track files. ROM 28 can further store files that include association information for associating certain track files with specific events related to end user device 10."), [0063] ("In these examples, a new file can represent a haptic track from a library having default values that can be used as guidelines or starting points for creating a new track file."). Indeed, a POSITA would have been motivated to set default values for these specific local variables to facilitate initiation of the actuator close to expected and/or user-selected operating parameters.

166. The following paragraphs will demonstrate that each specific initialization of step 702 is disclosed by the Wakuda-Ramsay-Rossi-Aldrich combination.

167. A POSITA would have found it obvious that the variables initialized to default values or values representing user-selections include variables consistent with the seven variables recite by the '337 patent, according to the means-plus-function construction. For example, the combination includes a mode that specifies a current operational mode of the device. Indeed, the combined system stores "a library of preset haptic tracks" and multiple different "haptic track files"

(operational modes) that are created based on haptic parameters such as "a frequency of vibration and amplitude of vibration" or "representations or values describing the aspects of the haptic track," as taught by Ramsay. APPLE-1006, [0028], [0030], [0034], [0042], [0049], [0058]. Based on my knowledge and experience in the field, and the description of the prior art, a POSITA would have found it obvious that the set-point values include variables consistent with the seven variables recited by the '337 patent and shown in Figure 7A. In particular, the '337 patent indicates seven variables that are set to default values, including:

(1) mode, which indicates the current operational mode of the device;

(2) strength, a numerical value corresponding to the current user-selected strength of operation, corresponding to the electrical current applied to the coil;

(3) lv10, a previously sensed vibrational strength;

(4) liv11, a currently sensed vibrational strength;

(5) freq, the current frequency at which the direction of current is alternated in the coil:

(6) d, the control output to the H-bridge switch; and

(7) inc, a Boolean value that indicates that the frequency is currently being increased.

168. The ’337 patent describes “modes” as 1) “In the default mode, the LRVM uses continuous feedback control to optimize the vibrational force produced by the LRVM by continuously seeking to operate the LRVM at a frequency as close as possible to the resonant frequency for the LRVM.” (col. 7, lines 48-52) and 2) “More complex vibrational modes may systematically and/or periodically alter the frequency or produce various complex, multi-component vibrational modes useful in certain applications, appliances, devices, and systems.” (col 7, lines 55-58). It would have been obvious to a POSITA that these modes correspond to the stored multiple different “haptic effects” or “haptic tracks” of the combined system, consistent with Gregorio’s and Ramsay’s suggestions.

169. For example, Ramsay describes “ROM 28 may be configured to store a library of preset haptic tracks.” APPLE-1006, [0028]. Therefore, the combined system includes multiple different “haptic effects” or “haptic tracks” that specify a current operational ***mode*** of the device, consistent with Ramsay’s suggestions, for example.

170. The use of a variable to indicate to the control program the operational mode the device is currently operating in is straightforward from Ramsay’s description, and has recognized benefits. For example, it was known to POSITA at the time that using variables can allow modes of operations to be linked to operational states for process flows. For example, based on a variable set for an

operating mode, a specific series of steps can be taken to accomplish a desired result. In addition, the use of variables was a known way to facilitate changing the operating mode. It was well known in programming to set a variable to a specific value depending on a desired state or outcome.

171. The combined system would operate based on one of the stored pre-defined haptic effects (***default operational mode***), such as an effect in which feedback control maintains oscillation at the mechanical resonant frequency, when initialized. Further, the combined system would operate based on one of the haptic tracks (i.e., mode) created or modified by the user through GUI (i.e., the mode set to values representing selections made by user input to the user-input features), as taught by Ramsay. *Id.*; §§VII.C & VIII.B.

172. I note that, like the modes recited by the '337 patent, the combined system includes one or more alternative or complex modes of operation that systematically and/or periodically alter the frequency or produce various complex, multi-component vibrational modes. For example, Ramsay describes that "ROM 28 can also store haptic track files created or modified by the user and can also store mixed track files, which include multiple haptic tracks combined together" and that the user "has the opportunity to modify certain characteristics of the haptic track as desired." APPLE-1006, [0028], [0035]. "Certain parameters or characteristics of a haptic output or haptic track can be created, entered, changed,

modified, etc. For example, the modifiable parameters may include a frequency of vibration and amplitude of vibration. Also, the frequency and amplitude can be set to change over time. In addition, the user is able to combine or mix different haptic tracks together if desired to provide a fuller haptic experience. In this way, a user is capable of programming or customizing a haptic track or track mix to one's liking." *Id.*, [0030]; *see also id.*, [0035]-[0039], [0047], [0057]-[0059]. Again, as discussed in Ground 1 ([2g]), Ramsay describes multiple haptic tracks being mixed to drive simultaneous oscillation of the movable component at two or more frequencies. APPLE-1005, [0027], [0030], [0046]-[0047]. Indeed, Ramsay describes "ROM 28 may be configured to store a library of preset haptic tracks" having such parameters, and/or that are combined. APPLE-1006, [0028].

173. The combination includes a ***strength*** variable (magnitude). For example, Ramsay describes that the magnitude variable is user-configurable through "input/output device" including GUI. APPLE-1006, [0022]-[0026], [0030]-[0033], [0046], [0053]-[0055]; §§VII.C & VIII.B; *see* Ground 1, [1f]; APPLE-1023, 9:65-10:3 ("The magnitude or strength of the force is dependent on the magnitude of the current that is applied to the coil."); APPLE-1023, 17:32-51 ("the gain 332 (or magnitude) of the force" and "gain of 100"), Figure 6; APPLE-1025, 6:19-47 ("increasing a period of time T during which the current is supplied and/or by increasing the maximum current"). The higher the current through the

coil, the higher the magnitude or strength of the vibration force. Accordingly, the combined system would operate based on one of the strength settings (as part of the predefined haptic effects) when it is powered on.

174. Based on my knowledge and experience in the field, and my review of the prior art, a POSITA would have recognized the known advantages associated with controlling or modulating the frequency input and/or power (i.e., current amplitude or magnitude) input to control vibrational output – the vibrational output being directly linked to the frequency and the magnitude of the current directed through the coil. By doing so, the magnitude of current (e.g., received by the power supply input of the H-bridge) could be adjusted to adjust the vibrational output based on available power and changes to the resonance frequency that might occur over time.

175. The combination also includes ***sensed values*** that include previously-sensed (lv0) and currently-sensed (lv1) vibrational strength values. The combined system includes a currently sensed vibration strength value and a previously sensed vibration strength value that are compared in carrying out the control algorithm. APPLE-1021, 2 (describing evaluation of frequency change results in increase or decrease of vibration output). As I discussed above, these variables are likewise initialized with default values that provide a starting point for operation (e.g., zero), which are then updated based on sensed values during operation. *Id.*

176. The combination includes a ***frequency*** (freq) at which current is changed in the coil, and the directional ***control signal*** (d) from the microprocessor. APPLE-1021, 1-3 ("excitation frequency"). In the combination, the frequency variable is initialized with default values to provide a starting point for operation (e.g., based on the stored "haptic effect" or "haptic track," or an assumed resonant frequency). For example, Wakuda describes use of a default frequency value upon initialization based on "the natural frequency (resonance frequency) of the movable body 6" that is "determined by a mass of the movable body 6 and the spring constants (spring constants in the neutral position shown in FIG. 1) of the energizing members 9." APPLE-1005, 7:26-43. Further, the directional signal, for example, is initialized with a default value (e.g., high or low), which is then reversed during operation to induce oscillation according to the feedback control program. The default value is a high or low value. The initial direction of the directional signal d is an implementation choice, and can depend on the structure of the LRVM, design characteristics, operational characteristics, desired initial direction of movement of the movable mass, etc., and is switched between the high and low values throughout operation. APPLE-1019 ("Shahoian"), Figure 5; *see also* APPLE-1020, 1:65-2:15; 3:44-55. I note that the '337 patent itself does not describe the initial value, or any express any particular significance to the initial value.

177. The combined system, consistent with Aldrich, steps through frequencies at which the current is changed in the coil. The combination includes a ***Boolean value*** (inc) that indicates that the frequency is being increased. The Boolean value tracks the status of frequency increase/decrease to implement the comparison in accordance with Aldrich's control algorithm, as a matter of routine implementation. As I discussed above, Boolean variables for such applications are a basic programming tool that a POSITA was well-aware of. *See* APPLE-1026, 29.

178. In "step 704," the '337 patent control program "waits for the next event." APPLE-1001, 6:61-65. In the combined system, the software executing on the microprocessor waits for the next event, such as a sensor input to be used in determining the control signal, or a user input to power down the device or modify haptic effect characteristics. APPLE-1006, [0022]-[0026], [0030]-[0033], [0046], [0053]-[0055]; *see* Ground 1, [1f], [4f]. When sensor signals are received by the microprocessor, the control outputs are adjusted accordingly. *See, e.g.*, APPLE-1005, 6:40-47 (describing "signal generation means 12 performs control" based on signals detected by "position detection means" and received by "signal generation means 12"). In fact, use of a loop or event handler in a feedback control system were known and a conventional technique readily implemented by a POSITA in order to operate in accordance with the respective event. I note that, based on my

knowledge and experience in the field, the use of a loop or event handler in a feedback control system were known to a POSITA. These were conventional techniques readily implemented by a POSITA in order to operate in accordance with the respective event. I note the '337 patent itself reflects the conventional nature of such programming techniques, which were used in place of timers, for example. APPLE-1001, 7:7-10 ("Rather than using a formal timer mechanism, certain implementations may simply employ counted loops or other simple programming techniques for periodically carrying out tasks.").

179. I further note that a POSITA recognized that it was conventional practice at the time to use one or a combination of an event handler, a loop, and a timer for implementing processes in program code. Conventional techniques of timers, loops, and event handlers generally allow program code to execute based on the existence of a certain event. A timer for example was a known technique to implement a process based on the expiration of an amount of time. An event handler for example was a known technique to implement a process based on an event state, variable value, user input, or other state. A loop was a known technique to implement a sequence of instructions that are continually repeated until a certain condition is reached. *See, e.g.*, APPLE-1026, 6-11.

180. In "step 712," the '337 patent's control program algorithm calls a "monitor" routine," which is illustrated in Figure 7B. APPLE-1001, 7:19-21.

Here again, based on my knowledge and experience in the field, a POSITA would have recognized that the "monitor" routine is a simple and known routine for implementing a feedback loop to maintain operation of a vibration module at or near resonance. The combined system executes the same algorithm. *See* §IX.B (Wakuda-Ramsay-Rossi-Aldrich combination). In particular, a POSITA would have found it obvious, especially based on Aldrich's descriptions of feedback control to operate at a resonant frequency, to compare vibration parameters while incrementing or decrementing the drive frequency, in accordance with Aldrich.

181. The combined system includes one or more sensors, as taught by Wakuda. APPLE-1005, 6:40-62 ("position detection means"). For example, Wakuda describe a closed-loop control to "generate a drive signal S1 tracking the resonance frequency of the movable body 6." APPLE-1005, 10:31-32. For example, Wakuda's "position detection means 11 detects that the movable body 6 has reached the neutral position ... that is, a middle point in the reciprocation stroke." *Id.*, 6:23-47. The detection signal of the middle point" is provided to the signal generation means 12, and "the signal generation means 12 performs control, such as switching of current direction of the drive signal S1." *Id.* Therefore, the software executed by the microprocessor in the combined system receives signals from the sensors, indicative of vibrational strength, and compares a current sensed vibration strength value and a previous sense vibration strength value to tune the

input frequency about a resonant frequency, consistent with steps 736-750 of Figure 7B of the ’337 patent. APPLE-1021, 1-3.

182. For example, in accordance with Aldrich’s suggestions, at a current time, the sensed vibration strength value at an incrementally increased control signal frequency is compared with a previous sensed vibration strength value. When the vibration strength has increased with increased frequency input, “then the direction of change . . . of frequency is accepted and another such change . . . is made during the following sampling period.” APPLE-1021, 2. To be clear, I note that this technique described by Aldrich is the same as steps 738-740 of the ’337 patent’s Figure 7B.

183. Similarly, when the vibration strength has not increased with increased frequency input, the control program determines that the resonant frequency has been exceeded. APPLE-1021, 2. As described by Aldrich, a POSITA would have recognized that when the vibration strength does not increase with increased output frequency, the frequency has moved away from a resonant peak. The “direction of change of frequency during the following sampling period is reversed,” such that the frequency is decremented, and the process continues. APPLE-1021, 2. Here again, I note that this technique described by Aldrich is the same as steps 742-744 of the ’337 patent.

184. The same process is applied when decrementing the output frequency, and thus carries out the same operations shown in Figure 7B at steps 746-752, for example.

185. As I discussed above, I note here again that, in the combined system, the currently and previously sensed sensor signals are processed and stored as integer values. Indeed, the use of integer values amounts to a known technique and a mere design choice (e.g., between integer or non-integer values). When implementing the linear resonant vibration module in accordance with Wakuda, Ramsay, Rossi, and Aldrich, a POSITA would have been motivated to utilize integer values when processing sensor signals. The sensor signals are typically converted to an integer value (by an analog-to-digital (A/D) converter), to facilitate digitally processing the signals, to ease data handling (integer values can be easier to handle digitally, including using hardware, than non-integer values), and to facilitate efficient computation and processing of the force values represented by the sensor signals. APPLE-1021, 2. A POSITA would have readily recognized the efficiency and effectiveness of utilizing an integer value (e.g., versus a decimal/fractional value). From my knowledge and experience in the field, a POSITA would have understood that typically, sensor values in digital systems are first represented and stored as integer values. From there, the values may optionally be converted to non-integer values (such as floats). A POSITA would

have thus would have been led to use integer values, reducing the need for additional conversion to non-integer values. Additionally, a POSITA would have viewed the use of integer values as a mere design choice between either integer values or non-integer values. As such, a POSITA would have found it obvious that the sensor signals are converted to an integer value, in order to digitally process the signals, and to facilitate efficient computation and processing of the force values represented by the sensor signals. APPLE-1021, 2-3.

186. In "step 714," the '337 patent's control program calls a "control" routine, which is illustrated in Figure 7C, "when the event corresponds to a change in the user input through the user interface." APPLE-1001, 7:21-24, 8:10-22. In the combined system, the user input provides a change in vibration strength (e.g., in accordance with Ramsay). Moreover, a POSITA would have recognized that the user input is received during a monitoring period so that the input is processed and implemented. When the user input is received, the software executing on the microprocessor outputs a corresponding control signal to the power supply in accordance with the user. For example, in the combined system, the software executed by the microprocessor receives user input adjusting the magnitude (e.g., height, frequency, etc.) of the waveform via a user interface, in accordance with Ramsay, thereby directing a change in vibration strength, and the control component changes the current provided from a power supply to the driving

component. APPLE-1006, [0022]-[0026], [0030]-[0033], [0046], [0053]-[0055]. Indeed, the current applied to the coil directly impacts the magnitude of the oscillations, implementing the user input directing a change in vibration strength. APPLE-1023, 9:65-10:3 ("The magnitude or strength of the force is dependent on the magnitude of the current that is applied to the coil."), 17:32-51 ("the gain 332 (or magnitude) of the force" and "gain of 100").

187. As such, the combined system includes the algorithm described with reference to Figure 7C of the '337 patent, according to the means-plus-function construction of "control component." In the combined system, the user input via the user interface provides a change in vibration strength. The user input is received from user input sensors so that the input is processed and implemented. In particular, the software executing on the microprocessor outputs a corresponding control signal to the power supply in accordance with the user unput. The process continues, such that the linear resonant vibration module operates according to the user input and feedback control loop (e.g., until further user input is detected).

188. Further, Ramsay describes that a user can customize characteristics of a haptic output including frequency of vibration. APPLE-1006, [0030]. The combined system's control component would receive user input through an "input/output device" (e.g., GUI) directing a change in vibration frequency.

APPLE-1006, [0030] ("frequency of vibration"); see also, [0033], [0035], [0039], [0051]. In response to such user input, the control component changes the frequency at which the control program changes the voltage state of the directional signal d. Indeed, in the combined system, the vibration frequency is controlled by the frequency at which the microprocessor changes the voltage state of the directional signal d output to the H-bridge switch circuit, and thus the frequency of the control signal is changed to implement the received user input. APPLE-1019, 7:34-36 ("A drive waveform that changes between positive and negative signs can be provided to the actuator to cause the oscillations."); APPLE-1037, 14:24-35 ("provide voltage or current in one of two directions"). As such, the combined system includes a control program having the algorithm described with reference to Figure 7C of the '337 patent, according to the means-plus-function construction of "control component."

189. In "step 718," the '337 patent's control program determines whether there has been a power down event. APPLE-1001, 7:24-28 ("[W]hen the event is a power-down event, as determined in step 718, resulting from deactivation of a power button by the user, then the control program appropriately powers down the device, in step 720, and the control program terminates in step 722."). Similar to the power on event described above, the combined system executes a power-down

event in response to user input (e.g., Wakuda-Ramsay's user-input features) that turns the device "off."

[1g] flux paths comprising a paramagnetic material that is shaped and positioned to reduce the reluctance of one or more magnetic circuits within the linear vibration module.

190. As I discussed in Ground 1 above, the Wakuda-Ramsay-Rossi-Aldrich combination renders obvious [1e], as taught by, for example, Wakuda, Wakuda-Ramsay, and supporting evidence.

Claim 2

[2pre]-[2f]

191. Elements [2pre]-[2f] are the same as [1pre]-[1f]. Therefore, the discussion with respect to [1pre]-[1f] above, which explains that Wakuda-Ramsay-Rossi-Aldrich provides the same limitations in claim 1, is incorporated herein by reference.

[2g] wherein the control component drives simultaneous oscillation of the moveable component at two or more frequencies to generate complex vibration modes.

192. As discussed in §III.C, under the means-plus-function construction, the corresponding structure for "control component" in claim 2 is identical to the corresponding structure for "control component" in claims 1 and 4, except that the algorithm is further designed for the additional function of "driving simultaneous oscillation of the moveable component at two or more frequencies to generate

complex vibration modes." Such additional algorithm is described at column 13 of the '337 patent. APPLE-1001, 13:3-41.

193. As I discussed in [1f] above, the Wakuda-Ramsay-Rossi-Aldrich combination provides the additional algorithm for the "complex vibration modes." For example, the resulting system includes one or more alternative or complex modes of operation that systematically and/or periodically alter the frequency or produce various complex, multi-component vibrational modes. *See* Ground 2 ([1f]); APPLE-1006, [0035]-[0039], [0047], [0057]-[0059].

194. Additionally, the Wakuda-Ramsay-Rossi-Aldrich combination provides the other limitations of claim 2, as taught by Wakuda-Ramsay. *See* Ground 1.

195. I am aware that, in the co-pending litigation, Patent Owner alleged the "control component" in claim 2 as a means-plus-function limitation and identified the corresponding structure as "microcontroller with internal or external memory; processor; CPU; microprocessor; and equivalents thereof" and "[if an algorithm is required] [w]here the corresponding structure is a processor, CPU, or microprocessor, the processor/CPU/microprocessor is programmed with an algorithm comprising the following steps: (a) set the mode and strength to values representing selections made by user input to the user input features; (b) provide a corresponding output to the power supply so that the power supply provides a

corresponding output to the driving component; and (c) drive simultaneous oscillation of the moveable component at two or more frequencies." APPLE-1046, 12-13. Based on my review, this means-plus-function interpretation is covered by this Petition's mapping based on the Wakuda-Ramsay-Rossi-Aldrich combination above because Patent Owner's interpretation is a broader version of the '337 patent's disclosed algorithm. *Supra*, §III.C. For example, the Wakuda-Ramsay-Rossi-Aldrich combination provides additional step (c) as taught by Wakuda-Ramsay, as shown in Ground 2 ([1f]). Further, the Wakuda-Ramsay-Rossi-Aldrich combination provides setting the mode and strength to values representing selections made by user input to the user input features, as taught by Wakuda and Ramsay as discussed above. Ground 2 ([1f]) and Ground 1 ([1f]).

Claim 3

[3] The linear vibration module of claim 2 wherein the complex vibration modes include: a primary oscillation frequency modulated by a modulating oscillation frequency; a beat frequency; and an aperiodic oscillation waveform.

196. As I discussed in Ground 1 above, the Wakuda-Ramsay-Rossi-Aldrich combination renders obvious [3], as taught by, for example, Wakuda, Wakuda-Ramsay, and supporting evidence.

Claim 4

[4pre]-[4e]

197. Elements [4pre]-[4e] are the same as [1pre]-[1e]. Therefore, the discussion with respect to [1pre]-[1e] above, which explains that Wakuda-Ramsay-

Rossi-Aldrich discloses the same limitations in claim 1, is incorporated herein by reference.

[4f] a control component that controls supply of power from the power supply to the driving component to cause the moveable component to oscillate at a frequency and an amplitude that are independently specified by user input received from the user-input features.

198. As noted above (§III.C), under the means-plus-function construction, the corresponding structure for "control component" in claim 4 is identical to the corresponding structure for "control component" in claim 1. Therefore, the same analysis of [1f] in Ground 2 applies here.

X. GROUND 3A: The Gregorio-Ramsay-Wakuda Combination Renders Obvious Claims 1, 2, and 4 (Plain-and-Ordinary Meaning and Patent Owner's Means-Plus-Function Construction)

A. The Predictable Combination of Gregorio and Ramsay

199. In the Gregorio-Ramsay combination, Gregorio's system would be implemented to enable a user to customize parameters associated with haptic effects, as taught by Ramsay. The resulting system is implemented to store the customized haptic effects to be selected and used in generating desired haptic feedback. *Id.* Ramsay would have modified Gregorio's haptically-enabled system to embed "[s]oftware and systems" in the system "according to the teachings [of Ramsay], to lead a user through the process of entering and/or modify parameters and characteristics of haptic tracks." APPLE-1006, [0015]. In particular, the memory device in the Gregorio-Ramsay (e.g., Gregorio's memory device 20 or

Ramsay's memory 16) would store "a software program for enabling an end user to create and/or modify haptic effects, the software program of which can be executed by processor," and would "also store haptic track files created or modified by the user and can also store mixed track files, which include multiple haptic tracks combined together." APPLE-1006, [0025], [0027]-[0028]. Further, the resulting system would allow users to "access[] programmable haptic design software 30 via GUI 24 and open[] a file to be edited," and to "interact with programmable haptic design software 30 by input and output mechanisms of GUI," as taught by Ramsay. APPLE-1006, [0037].

200. A POSITA would have been motivated and found it obvious to modify the haptic feedback system of Gregorio to be user-configurable as described in Ramsay for several reasons. Notably, the reasons discussed for the Wakuda-Ramsay combination in Ground 1 would have similarly motivated a POSITA to modify Gregorio's system to be user-configurable as described in Ramsay.

201. In particular, as discussed in Ramsay, a POSITA would have recognized that the capability of modifying characteristics of haptic feedback was normally limited to professional haptics designers, and that end users "typically [did] not have the option on the device itself to modify characteristics of haptic feedback." APPLE-1006, [0014]. Therefore, a POSITA would have looked for

references like Ramsay to expand the functionalities of then-existing haptic devices and allow end users to have capabilities to freely create and customize haptic effects to their liking. APPLE-1006, [0014]-[0015]. Therefore, a POSITA would have been motivated to provide Gregorio's system with user tools as taught by Ramsay to achieve the benefits of offering flexibility to end users in customizing haptic effects to their liking. APPLE-1006, [0014]-[0015]. Ramsay's technique allows users to conveniently "create or modify the haptic effect files directly on the device." *Id.*, [0014]. A POSITA would have recognized that the resulting system can benefit from Ramsay's GUI that displays haptic tracks and offers various, easy-to-use mechanisms for adjusting haptic parameters. APPLE-1006, [0053]-[0057].

202. Further, the Gregorio-Ramsay combination would enable the resulting system to "provide a fuller haptic experience" by allowing users to "combine or mix different haptic tracks together if desired." APPLE-1006, [0030]. Indeed, Ramsay discloses various options to create mixed tracks by allowing users to "combine haptic tracks to play simultaneously, to overlap in time for a portion of the time, to play end-to-end, or even to start a subsequent track after a short pause at the end of a first track." *Id.*, [0047]. A POSITA would have recognized that vibrant and interesting haptic effects would result from the combination that enables independent controlling of the frequency and amplitude for oscillation.

APPLE-1018, 224 ("For tactile applications, electrodynamic actuators appear only with linear moving coils or magnets as oscillation sources. The possibility to control frequency and amplitude independently from each other makes them interesting for tactors.").

203. Additional reasons would have prompted a POSITA to implement Gregorio's haptic feedback system to store haptic effects, in accordance with Ramsay's teachings, so that the parameters of a haptic effect, such as frequency and amplitude, are specified in the stored values. For example, storing haptic effects in the resulting system would further achieve Gregorio's purposes of "maximizing the haptic feedback" and generating haptic effects in "most effective and efficient" manners, as opposed to an alternative approach of "real-time generated haptic effects." APPLE-1004, 2:5-9, 1:32-36; APPLE-1010, [0008]. It was well-known to a POSITA that a wide variety of computing problems can be implemented in multiple ways (i.e. with multiple different algorithms) and that these multiple ways often have either high computing requirements with low storage requirements *or* low computing requirements with high storage requirements. This is commonly referred to as a time-memory trade-off. A POSITA would have recognized that generating haptic effects in real-time would require more processing power, and, in contrast, the user of local storage of haptic

effects instead can "reduce[] the required processing power." APPLE-1010, [0008].

204. A POSITA would have had a reasonable expectation of success in making the proposed modifications given that Gregorio and Ramsay describe the same techniques for controlling a linear actuator to produce desired output. APPLE-1004, 2:3-9; APPLE-1006, [0026]. Indeed, a POSITA would have recognized that the Gregorio-Ramsay combination requires only routine knowledge of software implementation techniques, which were well within the POSITA's skill. The modification to Gregorio based on Ramsay's teachings merely involves implementing Ramsay's software solutions in Gregorio's hardware setup without substantially changing Gregorio's other structures.

205. In particular, the combination would modify Gregorio's system only to the extent that it is necessary to implement Ramsay's software tools, and Gregorio's system would otherwise remain unchanged and perform its intended operations. In fact, the Gregorio and Ramsay references, originally assigned to the same company, share similar structures and operations that are compatible. For example, while Gregorio already discloses or renders obvious the frequency and amplitude being specified by the stored values (see Ground 1A, [1f]), Ramsay similarly discloses that "the customized haptic effects created by a user can be stored on the device for use by the user." APPLE-1006, [0017], [0027], [0028].

Further, a POSITA would have recognized that the purposes intended by Gregorio and Ramsay (e.g., providing haptic feedback) are compatible, and the Gregorio-Ramsay combination would have accomplished those in a similar way that each of Gregorio and Ramsay achieves. Moreover, the intended operations in each of Gregorio and Ramsay would be achievable in parallel to receive the benefits described by each reference. As such, combining Gregorio and Ramsay was merely the application of known techniques (Ramsay's software solution for user's customization of haptic effects) to a known device (Gregorio's haptically-enabled system) ready for improvement to yield predictable results (benefits articulated above).

B. The Predictable Combination of Gregorio-Ramsay and Wakuda

206. In the Gregorio-Wakuda combination, Gregorio-Ramsay's LRA would have been implemented based on Wakuda's structure of "vibration generating means." The modified LRA would have operated in a manner described in Wakuda, which is similar to Gregorio's operation alone or as modified by Ramsay. APPLE-1005, 5:51-6:10; APPLE-1004, 3:17-28. For example, in the resulting system, Gregorio-Ramsay's system including "casing 25," "coil 28," "magnet/mass 27," and "spring 26" would have been implemented according to Wakuda's teachings of "cylindrical-shaped casing 2," "coil 5," "movable body 6," and "energizing members 9," respectively. APPLE-1004, 3:12-28, Figure 2;

APPLE-1005, 4:33-5:64; *compare* Gregorio's Figures 2 *with* Wakuda's Figure 1B (color-coding matching components below).

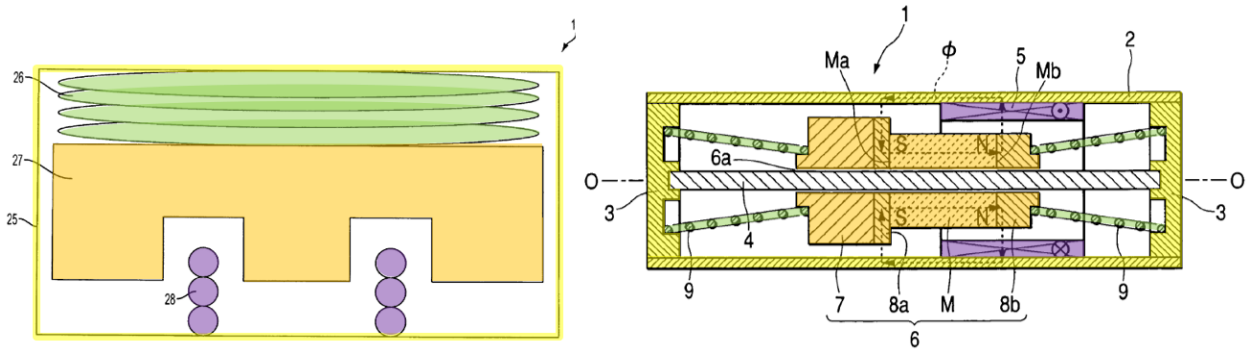

APPLE-1004, Figure 2 (left); APPLE-1005, Figure 1B (right) (annotated)

207. A POSITA would have been motivated, for various reasons, to implement Gregorio's haptic feedback system, particularly its LRA, according to Wakuda's vibration generator system, particularly its vibration generator means. While Gregorio describes the main components (including the spring 26 at the end) of the LRA with reference to Figure 2, the description is only at a high level. Therefore, a POSITA, looking at Gregorio's disclosure, would have naturally looked to other references, such as Wakuda, for implementation details. Wakuda provides a detailed implementation of a linear vibration generator system that is similar to Gregorio's LRA. For example, Wakuda's vibration system includes "cylindrical-shaped casing 2," "coil 5," "movable body 6," and "energizing members 9," which respectively match Gregorio's "casing 25," "coil 28," "magnet/mass 27," and "spring 26." APPLE-1004, 3:12-28, Figure 2; APPLE-

1005, 4:33-5:64, Figure 1B. Further, the operations are similar based on the interaction between the magnetic fields of the coil and the magnet. *Id.*

208. Based on my review, it would have been naturally understood that the resulting system would still achieve the benefits offered by Gregorio in implementing Gregorio-Ramsay's system based on Wakuda's similar teachings. Indeed, Gregorio contemplates its system as "a handheld device, such as a cellular telephone, PDA, computer tablet, etc." APPLE-1004, 3:1-2. Wakuda's vibration generating means are configured to be "mountable on small-sized information terminal devices, such as portable telephones, PDA, portable game equipment[], and so on[.]" APPLE-1005, 1:11-14. Therefore, a POSITA would have readily recognized that Gregorio-Ramsay's system would directly benefit from Wakuda's teachings, and therefore would have been naturally motivated for the combination.

209. Looking at Gregorio's general description, a POSITA would have readily recognized that one end of Gregorio's spring needs to be affixed to the moving magnet and the other end of the spring to one end of the LRA housing. If one end of Gregorio's spring is not affixed to the moving magnet by glue, welding, or similar means, the magnet can disconnect from the spring in some portion of operation or collide with the other end of the LRA cylinder. Similarly, if the other end of the spring is not affixed to the end of the LRA cylinder, it can disconnect from the end of the LRA housing and fail to transmit force to the human user via

the LRA body. Therefore, a POSITA would have been motivated to use Wakuda's springs at both ends to eliminate the need to affix the spring(s) to the magnet or to the LRA housing because the magnet is squeezed to an extent between the two springs and the LRA housing ends. A POSITA would also have understood that the physics of vibration including resonance were substantially the same with a spring at one end or springs at both ends of the LRA's "cylindrical-shaped casing 2."

210. A POSITA would have been prompted to combine Gregorio-Ramsay and Wakuda because doing so was the application of known techniques (Wakuda's vibration generator structure and operational scheme) to a known system (Gregorio's similar haptic feedback system) ready for improvement to yield predictable results (benefits articulated above). A POSITA would have had a reasonable expectation of success in making the proposed modifications based on the similarity of the haptic feedback system architectures in Gregorio-Ramsay and Wakuda.

211. Based on my knowledge and experience in the field and my review of the record, the Gregorio-Ramsay-Wakuda combination would not change the hallmark aspects of either reference because the combination would modify Gregorio-Ramsay-Wakuda's actuator only to the extent that it is necessary to implement Wakuda's actuator, and Gregorio-Ramsay's techniques would

otherwise remain unchanged and perform intended operations. Again, Wakuda's system is compatible with Gregorio-Ramsay's entire disclosure so that the resulting system still can perform monitoring a variable resonant frequency and adjusting the haptic feedback accordingly, as disclosed in Gregorio or Gregorio-Ramsay.

C. Analysis of Gregorio-Ramsay-Wakuda With Respect to Claims 1, 2, and 4

212. As shown in this section, Gregorio-Ramsay-Wakuda provides all elements of claims 1, 2, and 4.

Claim 1

[1pre] A linear vibration module comprising:

213. Based on my review, Gregorio-Ramsay-Wakuda provides a vibration module, such as a combination of the "haptic feedback system" including "processor 12," "actuator drive circuit 16," "LRA 18," and "memory 20" and the "user interface" including "touch sensitive surface 11" and "mechanical keys/buttons 13." APPLE-1004, 2:10-20.

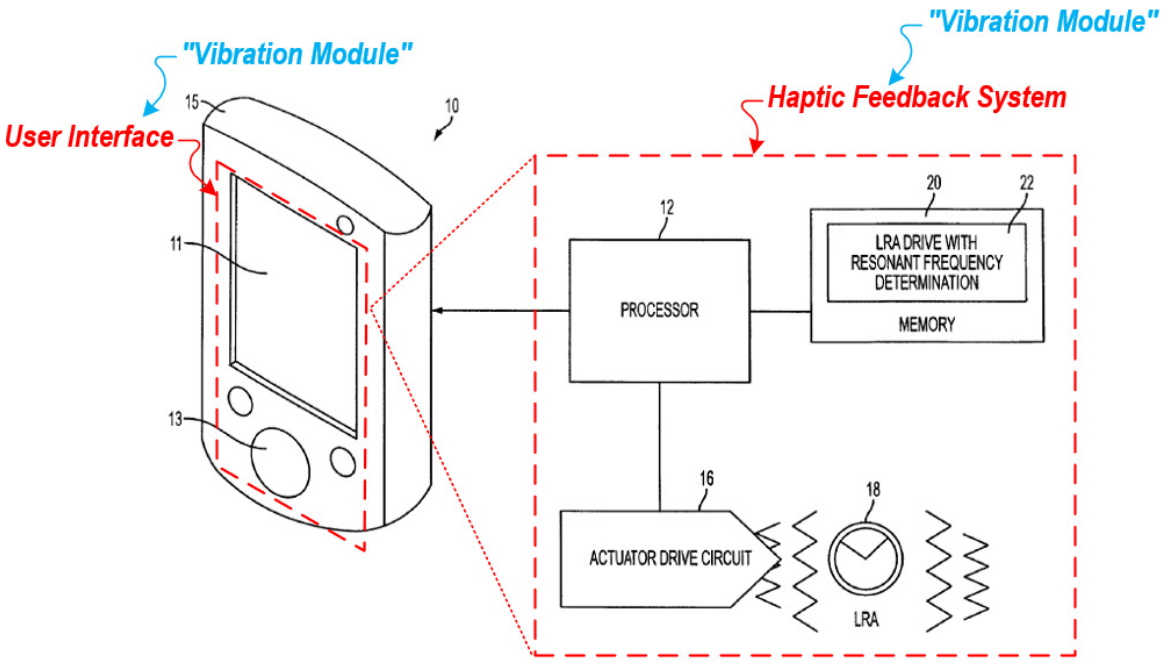

APPLE-1004, Figure 1 (annotated)

214. For example, Gregorio describes "a haptically-enabled system 10." APPLE-1004, 2:10-11. "System 10 includes a touch sensitive surface 11 or other type of user interface mounted within a housing 15, and may include mechanical keys/buttons 13." APPLE-1004, 2:11-14. "Internal to system 10 is a haptic feedback system that generates vibrations on system 10," which "includes a processor 12. Coupled to processor 12 is a memory 20 and an actuator drive circuit 16, which is coupled to an LRA actuator 18." *Id.*, 2:14-20. Gregorio's system "may be a handheld device, such as a cellular telephone, PDA, computer tablet, etc. or may be any other type of device that provides a user interface and includes a haptic effect system that includes one or more LRAs [Linear Resonant Actuators]." APPLE-1004, 3:1-4.

[1a] a housing;

215. Gregorio-Ramsay-Wakuda's linear vibration module includes "casing 25," which corresponds to the housing in claim 1. APPLE-1004, 3:13-15, Figure 2. For example, Gregorio's system 10 includes "a haptic feedback system that generates vibrations on system 10." APPLE-1004, 2:14-15. The haptic feedback system includes an LRA actuator 18. *Id.*, 2:18-20. Referring to Figure 2 below, "LRA 18 includes a casing 25," which a POSITA would have recognized corresponds to a housing. *Id.*, 3:13-15.

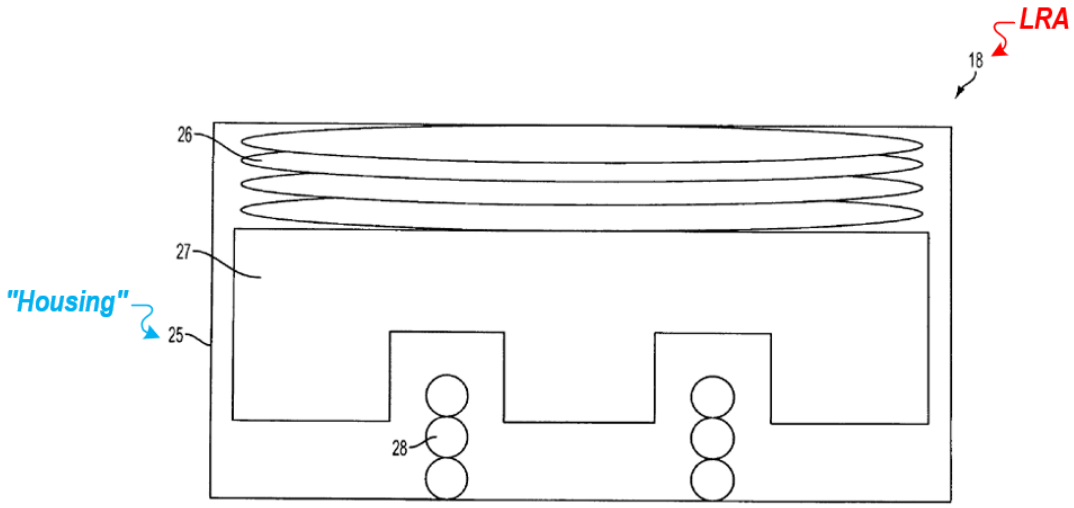

APPLE-1004, Figure 2 (annotated)

216. In addition, referring to Figure 1 below, Gregorio's "[s]ystem 10 includes a touch sensitive surface 11 or other type of user interface mounted within a housing 15." APPLE-1004, 2:11-14.

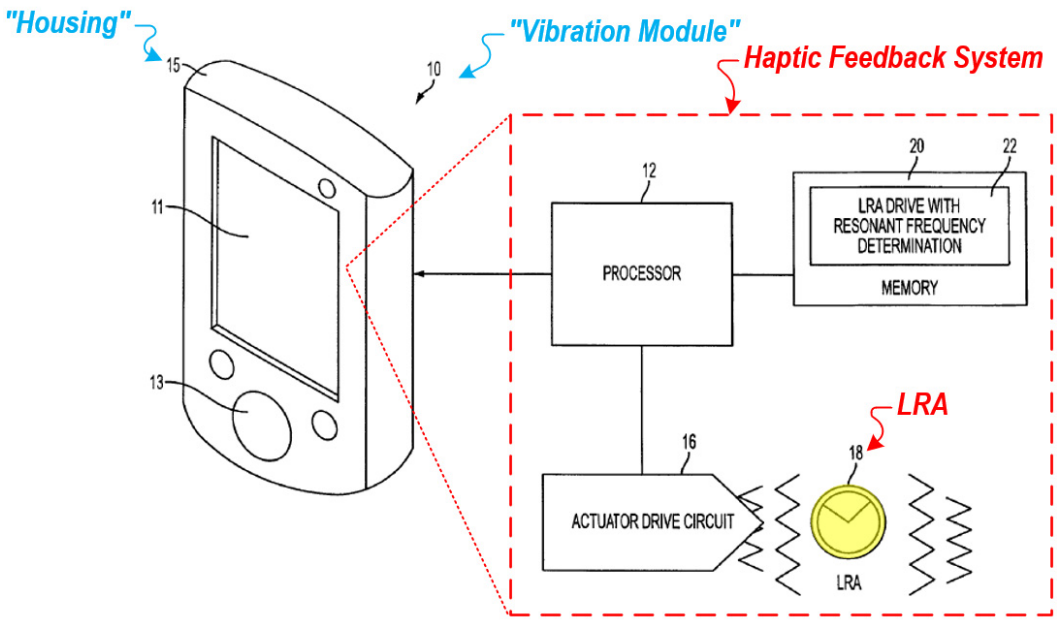

APPLE-1004, Figure 1 (annotated)

[1b] a moveable component;

217. Based on my review, Gregorio-Ramsay-Wakuda's linear vibration module includes "magnet/mass 27," as taught by Gregorio, which corresponds to the moveable component. In particular, Gregorio describes that the "haptically-enabled system 10" (vibration module) includes a moveable component ("magnet/mass 27"). APPLE-1004, 3:12-14. Like the movable component in the '337 patent, magnet/mass 27 can be pushed or pulled by the interaction between the magnetic field of the magnet 27 and the magnetic field around the coil 28. APPLE-1004, 3:17-21.

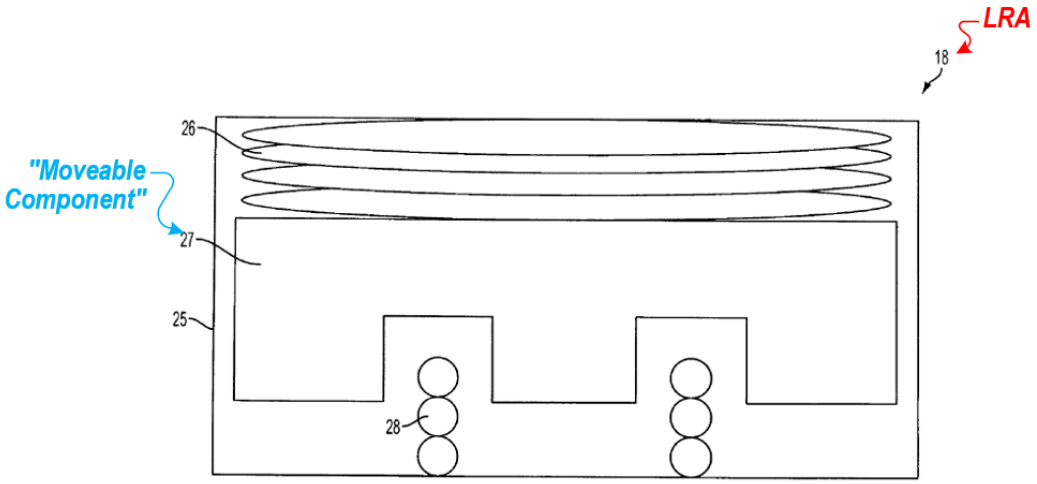

APPLE-1004, Figure 2 (annotated)

[1c] a power supply;

218. Gregorio-Ramsay-Wakuda's linear vibration module includes a power supply ("actuator drive circuit 16"), "which includes electronic components and circuitry used to supply LRA 18 with the required electrical current and voltage to cause the desired haptic effects," as taught by Gregorio. APPLE-1004, 2:18-20-39, 3:17-20. In particular, Gregorio's vibration module includes "actuator drive circuit 16," which corresponds to a power supply, and the actuator drive circuit 16 "includes electronic components and circuitry used to supply LRA 18 with the required electrical current and voltage to cause the desired haptic effects." APPLE-1004, 2:18-20, 2:36-39; *see also* 3:17-20 (confirming that "current flows thru coil 28" to generate a magnetic field around the coil). Because electric power is defined by current and voltage, a POSITA would have understood that actuator

drive circuit 16 (including "electronic components and circuitry") is a power supply. APPLE-1038, 1-2.

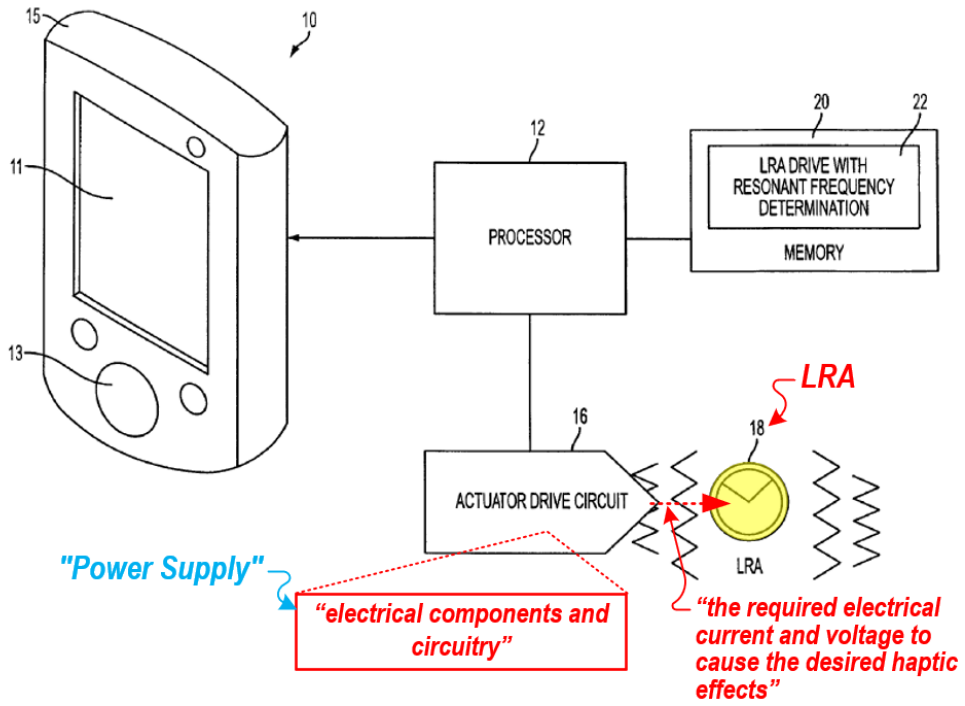

APPLE-1004, Figure 1 (annotated)

219. In addition or alternatively, referring to Figure 2 below, Gregorio describes that "current flows thru coil 28" to generate a magnetic field around the coil. *Id.*, 3:17-20. Further, Gregorio's system employs "current generator 422" to convert a pulse to current that flows into LRA 18. *Id.*, 5:49-53, Figure 4 (illustrating "current generator 422" as "PWR STAGE" and "V-I EN"). With these teachings, a POSITA would have understood and found obvious that Gregorio's system includes a power supply to supply "current" to LRA 18.

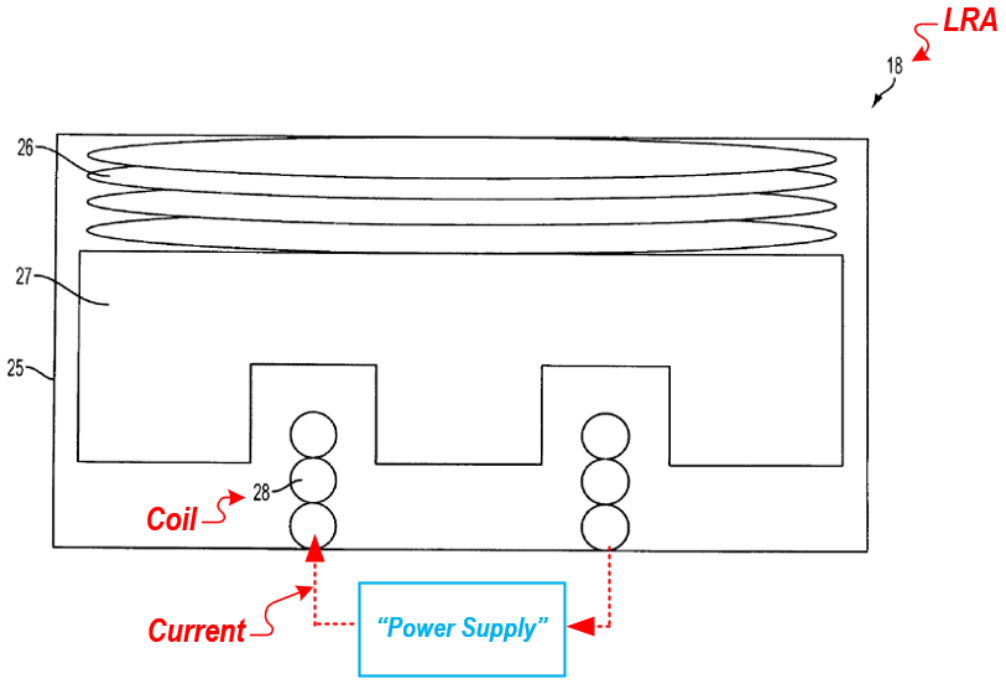

APPLE-1004, Figure 2 (annotated)

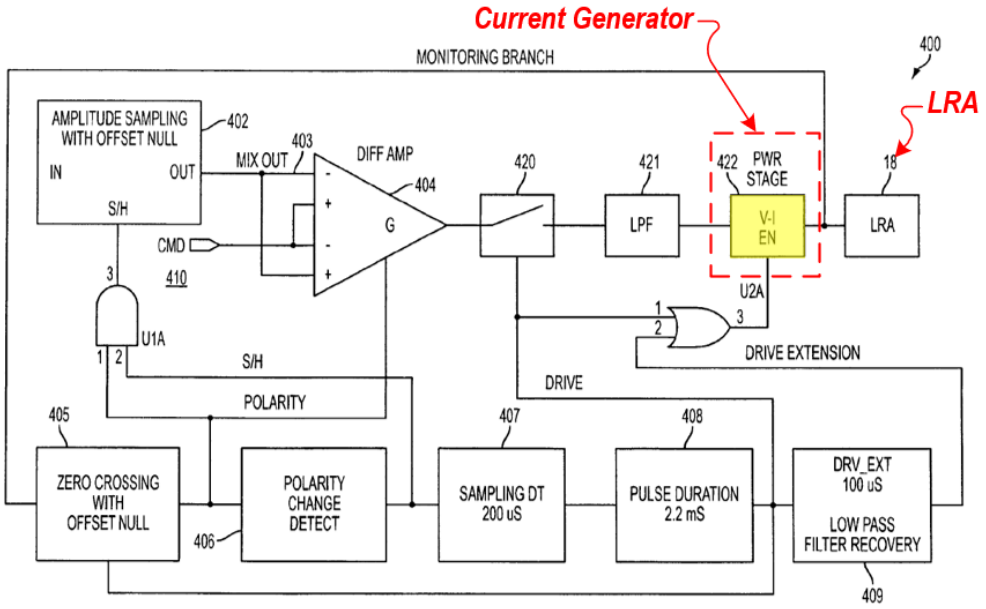

APPLE-1004, Figure 4 (annotated)

220. Indeed, it was well-known that Gregorio's "haptically-enabled system 10," which "may be a handheld device, such as a cellular telephone, PDA,

computer tablet, etc.," included a circuit that controls supply of power from a battery or other power sources included in or connected to the system. Further, a POSITA would have understood and found obvious that an actuator for a haptic feedback device is coupled to a power supply for the purpose of providing electrical power. APPLE-1019, 5:35-37 ("Power supply 40 can optionally be coupled to actuator interface 38 and/or actuators 30 to provide electrical power."); APPLE-1007 ("Grant"), [0048], [0066], [0103]. For example, Grant describes that its "portable computer 10 including a haptic touchpad" is "powered by batteries or other portable energy source in addition to other more stationary power sources." APPLE-1007, [0048]. Grant further describes that "power for the actuators can be drawn off a bus connecting the computer to the touchpad (or touch screen)." *Id.*, [0066], [0103].

[1d] user-input features;

221. Gregorio-Ramsay-Wakuda's linear vibration module includes user-input features, such as "touch sensitive surface 11" that "generates and displays images for the user to interact with, such as keys, dials, etc." and/or "mechanical keys/buttons 13," as taught by Gregorio. APPLE-1004, 2:10-14, 2:64-67. In particular, Gregorio's system 10, which corresponds to the vibration module, includes several user-input features, such as "touch sensitive surface 11" that "generates and displays images for the user to interact with, such as keys, dials,

etc." APPLE-1004, 2:10-14, 2:64-67. The system further includes "mechanical keys/buttons 13." *Id.*, 2:10-14.

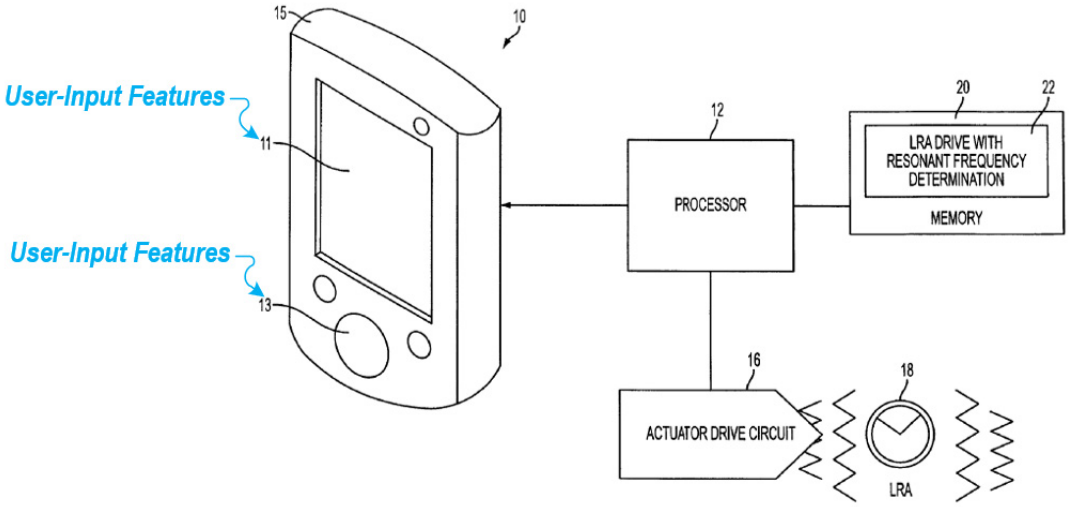

APPLE-1004, Figure 1 (annotated)

222. Further, Gregorio-Ramsay-Wakuda's user input features further include "input/output device" and "graphical user interface (GUI)" providing a menu option, as taught by Ramsay. APPLE-1006, [0024], [0032], [0053], [0015].

[1e] a driving component that drives the moveable component in each of two opposite directions within the housing;

223. Based on my review, Gregorio-Ramsay-Wakuda's linear vibration module includes a driving component ("electric coil") that drives the moveable component ("movement/oscillation of magnet") to oscillate within the housing ("casing") "when current flows thru coil 28 [and] a magnetic field forms around coil 28," as taught by Gregorio. APPLE-1004, 3:12-28, 2:10-20.

224. For example, Gregorio's system 10 (including LRA 18) includes the electric coil 28, which corresponds to a driving component, because "when current flows thru coil 28 a magnetic field forms around coil 28," which causes "movement/oscillation of magnet 27" (movable component) within the casing 25 (housing) or the housing 15 of the system 10 that encloses LRA 18. APPLE-1004, 3:12-28, 2:10-20.

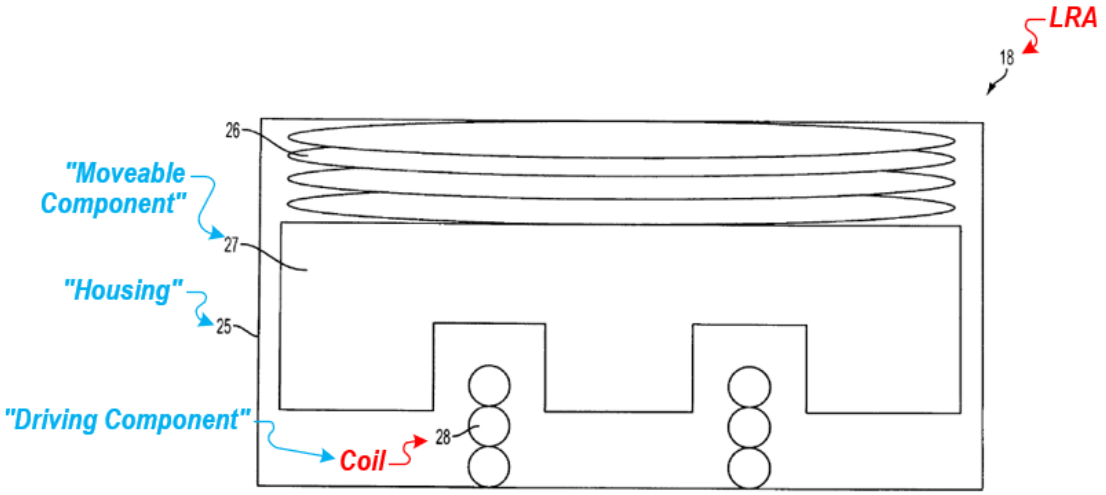

APPLE-1004, Figure 2 (annotated)

[1f] a control component that controls supply of power from the power supply to the driving component to cause the moveable component to oscillate at a frequency and an amplitude specified by user input received from the user-input features; and

225. Based on my review, Gregorio-Ramsay-Wakuda's vibration module includes a control component (e.g., the combination of "processor," "memory," and either "LRA Drive with Resonant Frequency Determination module" or circuit 400) that controls the supply of power from the power supply (e.g., "actuator drive

circuit") to the driving component (e.g., "coil") to cause the moveable component (e.g., "movement/oscillation of magnet") to oscillate at a frequency (e.g., high-level frequency, assumed resonance frequency, or determined resonance frequency) and an amplitude (e.g., high level "magnitude," "desired amplitude," or "present amplitude") specified by user input received from the user-input features (Gregorio-Ramsay's on-device user interface allowing the user to separately input frequency and amplitude). APPLE-1004, 2:18-20, 2:25-30, 2:44-50, 4:20-22, 4:49-65; APPLE-1006, [0005], [0015].

226. In particular, as shown in [1a], Gregorio's "processor 12," coupled to "memory 20," controls "actuator drive circuit 16" to provide desired haptic effects via LRA 18. APPLE-1004, 2:18-20. A POSITA would have readily recognized that, in providing the haptic effects, the processor controls supply of power from the power supply to the driving component. As shown in [1c] above, according to the control signals from the processor, the "electronic components and circuitry" of the actuator drive circuit 16, which corresponds to, or are coupled to, the power supply, supplies the "required electrical current and voltage" (power) to the coil 28 (driving component) of LRA 18, thereby causing the magnet 27 (moveable component) to oscillate. APPLE-1004, 2:36-39, 3:12-28.

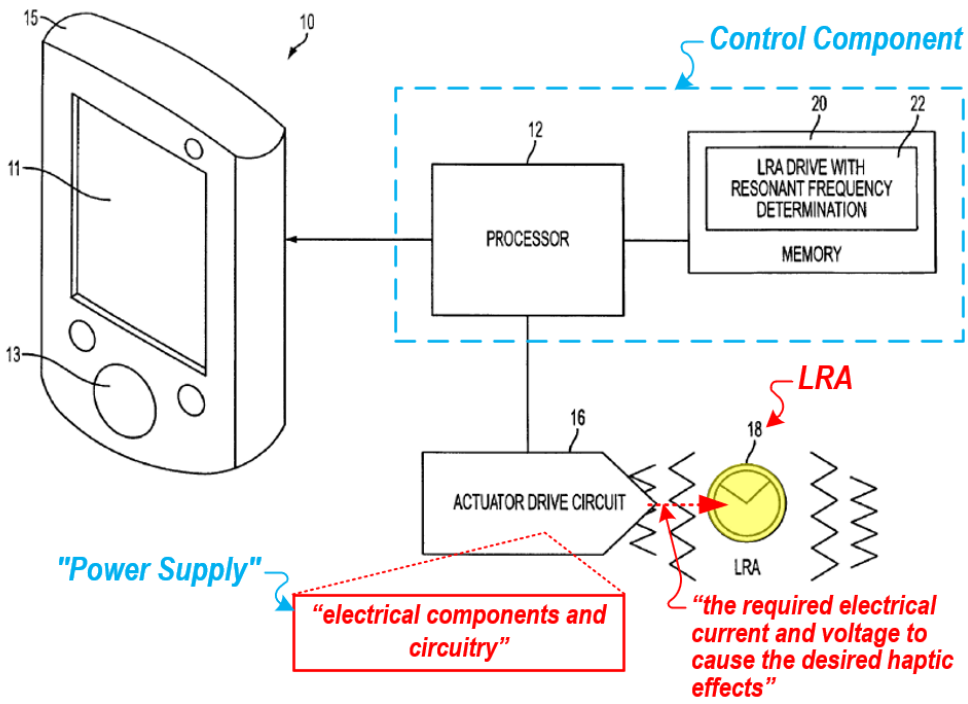

APPLE-1004, Figure 1 (annotated)

227. "Memory 20 stores instructions executed by processor 12 … include[ing] an LRA Drive with Resonant Frequency Determination module 22 which are instructions that, when executed by processor 12, generate drive signals for LRA 18." APPLE-1004, 2:44-50, 4:28-31. These instructions include the assumed resonant frequency, the "desired amplitude," and the "present amplitude," which are stored in memory at least when "the desired amplitude is compared to the present amplitude." APPLE-1004, 4:20-22, 4:49-65.

228. Put differently, as shown in [1a], Gregorio's "haptic feedback system" includes "processor 12" and "memory 20," which a POSITA would have understood as collectively corresponding to a control component because the

processor, coupled to the memory, controls "actuator drive circuit 16" to provide desired haptic effects via LRA 18. APPLE-1004, 2:18-20. For example, "[p]rocessor 12 outputs the control signals to drive circuit 16 ... to supply LRA 18 with the required electrical current and voltage to cause the desired haptic effects," and "[m]emory 20 stores instructions executed by processor 12," which "includes an LRA Drive with Resonant Frequency Determination module 22 which are instructions that, when executed by processor 12, generate drive signals for LRA 18." APPLE-1004, 2:36-39, 2:44-50.

229. As discussed in [1b] and [1e] above, LRA 18 includes the coil 28 (driving component) that generates a magnetic field, which interacts with the magnetic field of the magnet 27 to cause the magnet 27 (movable component) to oscillate. APPLE-1004, 3:12-28. Such oscillation—namely, haptic effects—is "played based on high level parameters" (stored values) that include "magnitude, frequency and duration." *Id.*, 2:25-30. Therefore, a POSITA would have understood and found obvious that, in Gregorio's haptic feedback system, the magnet 27 (moveable component) is caused to oscillate at a magnitude (amplitude) and a frequency that are specified by Gregorio's "high level parameters that define a particular haptic effect." APPLE-1004, 2:25-30.

230. As shown in [1c] above, the "required electrical current and voltage" (power) being applied to the coil 28 (driving component) of LRA 18 are supplied

by the "electronic components and circuitry" of the actuator drive circuit 16, which corresponds to, or coupled to, the power supply. APPLE-1004, 2:36-39. Further, "[p]rocessor 12 outputs the control signals to drive circuit 16 ... to supply LRA 18 with the required electrical current and voltage to cause the desired haptic effects." *Id.* Therefore, a POSITA would have understood and found obvious that the processor 12 (part of control component) controls, using the "control signals," the "required electrical current and voltage" supplied by the drive circuit's "electronic components and circuitry" (supply of power from the power supply) to the coil 28 (driving component) to cause the magnet 27 (moveable component) to oscillate.

231. I note that, in Gregorio-Ramsay-Wakuda, those high-level frequency and amplitude parameters are specified by user input received from the user-input features because Gregorio-Ramsay's on-device user interface allows the user to separately input frequency and amplitude. APPLE-1006, [0005], [0015]. In particular, the Gregorio-Ramsay-Wakuda linear vibration module includes "on-device" GUI with a menu option, as taught by Ramsay. APPLE-1006, [0015], [0024], [0032], [0053]. Through Ramsay's GUI, "[c]ertain parameters or characteristics of a haptic output or haptic track can be created, entered, changed, modified, etc." and such "modifiable parameters may include a frequency of vibration and amplitude of vibration." APPLE-1006, [0030], [0033], [0046], [0053]-[0055]. Therefore, in the resulting system, the user can set and modify

various parameters including "a frequency of vibration and amplitude of vibration" through GUI, as taught by Ramsay.

[1g] flux paths comprising a paramagnetic material that is shaped and positioned to reduce the reluctance of one or more magnetic circuits within the linear vibration module.

232. As discussed in Ground 1 ([1g]), Wakuda provides that the Gregorio-Ramsay-Wakuda vibration module includes the flux paths. Give the similarity with the Wakuda-Ramsay system (Ground 1), the analysis of Ground 1 ([1g]) applies for the Gregorio-Ramsay-Wakuda system here.

233. Specifically, in the Gregorio-Ramsay-Wakuda combination, the vibration module would include the flux paths, as taught by Wakuda. For example, Wakuda renders obvious a magnetic flux φ created in the resulting actuator—Gregorio-Ramsay's LRA implemented by Wakuda's "vibration generating means" structure. *See* the Gregorio-Ramsay-Wakuda combination discussion in §X.B (Gregorio-Ramsay-Wakuda combination). In particular, the "magnetic flux φ generated by the magnet M are output through one of the yoke members 8 b in an outer peripheral direction to traverse the coil 5 perpendicularly to reach the casing 2." APPLE-1005, 5:56-59. "Further, the magnetic flux φ form a magnetic path, along which the flux pass inside the casing 2 made of a magnetic substance to be conducted to a position opposed to the other of the yoke members 8 a, and are output toward the yoke member 8 a from the position to

reach the S pole of the magnet M." *Id.*, 5:59-64. Notably, to create this magnetic path, Wakuda requires that the casing 2 and the yoke members 8a, 8b of the Gregorio-Ramsay-Wakuda's actuator be "made of a magnetic substance" or "formed from a magnetic material." *Id.*, 4:34-36, 4:51-54.

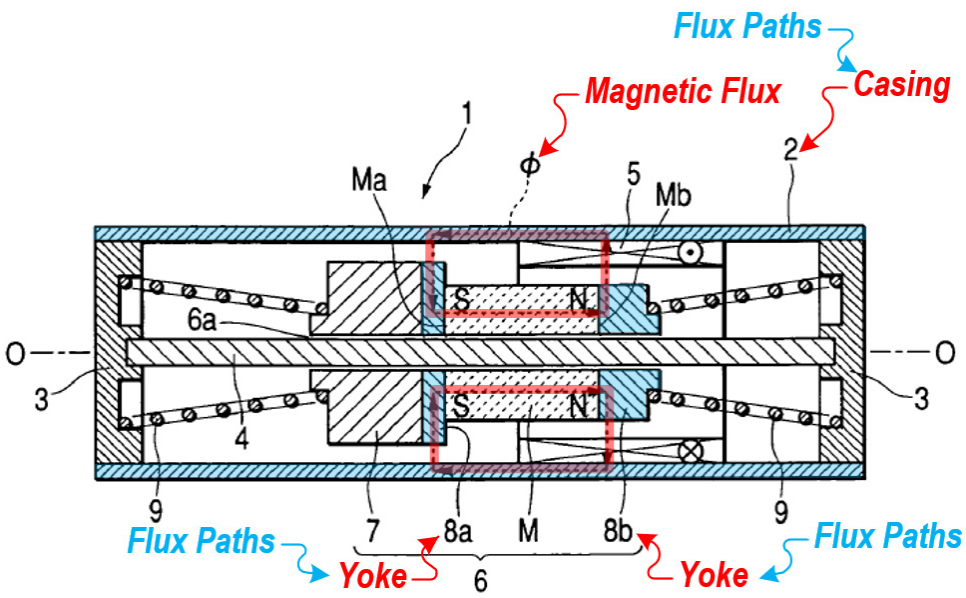

APPLE-1005, Figure 1B (annotated)

234. A POSITA would have understood and found obvious that, in the resulting actuator, the casing, alone or along with the yoke members, would correspond to the flux paths because the casing and the yoke members are made of magnetic substance/material, thereby reducing the reluctance of the magnetic path defined at the actuator (magnetic circuits within the vibration module) despite air gaps between the components (e.g., the casing 2 and the movable body 6 in Wakuda) of the actuator. APPLE-1005, 4:34-36, 4:51-54. Indeed, the concept of reluctance of a magnetic circuit that can be increased by air gap was well-known

before the Critical Date. APPLE-1012, 27, 37. Therefore, it was well-known and obvious to shape and position the components of an actuator (or the materials thereof) that define a magnetic path such that the components reduce magnetic reluctance and increase magnetic flux.

235. In addition, a POSITA would have understood and found obvious that a paramagnetic material would be beneficially used for Wakuda's "magnetic material" for the casing 2 and the yoke members 8a, 8b of the Gregorio-Ramsay-Wakuda's actuator. APPLE-1005, 4:34-36, 4:51-54, 5:56-64. Indeed, paramagnetic materials are one of a few categorical options for magnetic materials. APPLE-1032 (describing paramagnets as one of four types of magnetic material); APPLE-1035; APPLE-1037. Further, a POSITA would have readily recognized that aluminum was a known example of a paramagnetic material, and that aluminum was widely used for the housing of haptic feedback actuators and user devices employing the actuators, which can be involved in creating a path for magnetic flux. APPLE-1031, 21:61-66 ("In applications where it is desired to ensure actuation times are as low as possible, the piston 92 is made of material having a suitably high ratio that is also non-magnetic, non-ferrous and, <u>if desired, can be paramagnetic</u>. <u>Aluminum, copper and magnesium and alloys thereof are examples of suitable materials meeting these requirements</u>."); APPLE-1013, 9:36-

39 ("The casing may be made from any rigid material, or variety of materials, such as aluminum[.]").

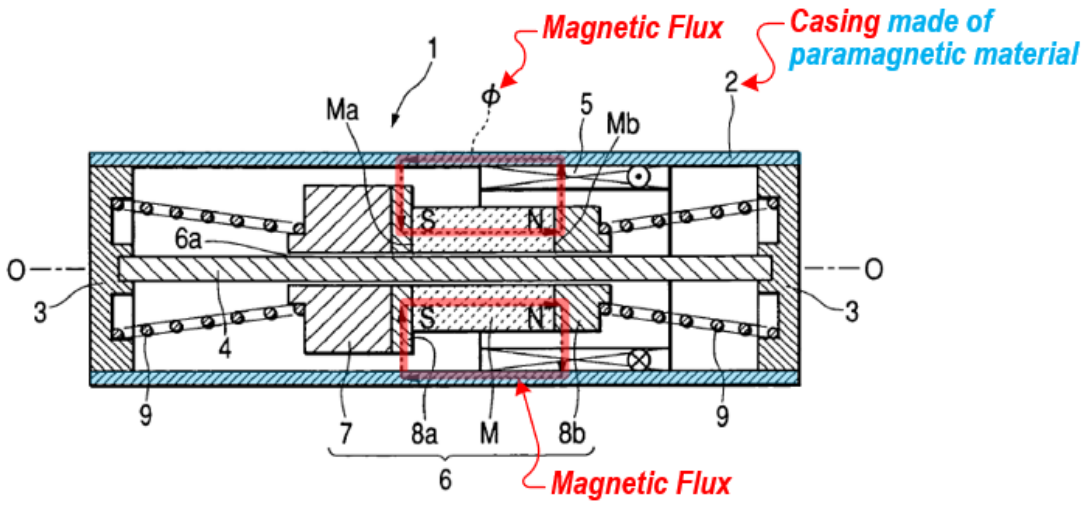

APPLE-1005, Figure 1B (annotated)

236. A POSITA would have been motivated to implement the material of the casing of Gregorio-Ramsay-Wakuda's LRA using a paramagnetic material (e.g., aluminum) to achieve known advantages. Wakuda describes that, in the Gregorio-Ramsay-Wakuda combination, the casing is "made of a magnetic substance as a support." APPLE-1005, 4:34-36. Further, "the magnetic flux φ form a magnetic path, along which the flux pass inside the casing 2 made of a magnetic substance to be conducted to a position opposed to the other of the yoke members 8a, and are output toward the yoke member 8a from the position to reach the S pole of the magnet M." *Id.*, 5:59-64, Figure 1B. Therefore, a POSITA would have been motivated to determine a desirable "magnetic material" for the

casing of the LRA or vibration generating means such that the casing defines a part of the magnetic flux, as taught by Wakuda. APPLE-1005, 4:34-36, 5:59-64.

237. A POSITA would have been motivated to use a paramagnetic material (e.g., aluminum) for the casing of the Gregorio-Ramsay-Wakuda actuator for several reasons. As a first reason, a POSITA would have readily recognized that a paramagnetic material was a type of a "magnetic substance" mentioned in Wakuda and provided permeability that can define the magnetic flux as identified in Wakuda. *Id.*; APPLE-1032; APPLE-1035; APPLE-1037.

238. As a second reason, it was well-known that at least one well-known paramagnetic material, such as aluminum, is lighter than other popular magnetic materials like iron and steel, making it a superior choice for applications where weight matters, such as Gregorio-Ramsay-Wakuda's portable handheld device. Therefore, a POSITA would have been motivated to use a paramagnetic material (e.g., aluminum) in the resulting system to better serve the objectives of Gregorio and Wakuda—namely, making portable handheld devices of small form factor. APPLE-1004, 3:1-2 ("a handheld device, such as a cellular telephone, PDA, computer tablet, etc."); APPLE-1005, 1:11-14 ("mountable on small-sized information terminal devices, such as portable telephones, PDA, portable game equipment[], and so on[.]").

239. As a third reason, well-known paramagnetic materials (e.g., aluminum) were well-known to be naturally resistant to rust and corrosion, giving it a longer lifespan in harsh environments compared to other popular magnetic materials like iron and steel. APPLE-1027, 2 ("When it starts to corrode, aluminium forms an oxide layer, which is impervious to water and oxygen. Iron, on the other hand, forms a permeable oxide layer which allows both water and oxygen to pass through and keep attacking the underlying iron."; "The best way to protect iron or steel is to make an impervious layer on the metal and protect it the same way as aluminium does naturally. This is why engineers paint, grease, oil or tar steel to stop water and oxygen getting to the iron."); APPLE-1028, 1 ("[Aluminum is] often preferred over other metals because of its combination of strength, rust resistance, low weight, and ductility."). Therefore, a POSITA would have been motivated to choose such paramagnetic materials (e.g., aluminum) for the casing of the resulting system, such as portable handheld devices, which are intended to be frequently exposed to various daily environments (e.g., high/low temperature, humidity, etc.).

240. As a fourth reason, a POSITA would have understood that paramagnetic materials (e.g., aluminum) are an excellent conductor of electricity and heat including the heat generated in electric coils, making it suitable for various electrical applications such as the Gregorio-Ramsay-Wakuda's actuator

system. APPLE-1029 (describing aluminum is 61% as conductive as copper); APPLE-1030 (describing aluminum having thermal conductivity of 0.50 (cal/sec)/(cm^2 C/cm) and 205.0 W/m K).

241. Lastly, the implementation of Gregorio-Ramsay-Wakuda's actuator to use paramagnetic materials would have been predictable because doing so was the application of known techniques (known materials for actuator elements) to a known device (Gregorio-Ramsay-Wakuda's actuator) ready for improvement to yield predictable results (benefits articulated above). A POSITA would have had a reasonable expectation of success in making the proposed modifications because the modifications would have been implemented by merely applying paramagnetic materials (e.g., aluminum) to Gregorio-Ramsay-Wakuda's actuator. The combination would modify Gregorio-Ramsay-Wakuda's actuator only to the extent that it is necessary to implement the material of the casing of the actuator, and Gregorio-Ramsay-Wakuda's actuator would otherwise remain unchanged and perform intended operations.

242. Notably, a POSITA would have readily understood that Wakuda's "magnetic path, along which the flux pass inside the casing 2 made of a magnetic substance" would achieve the same function as the '337 patent's "paramagnetic flux paths." APPLE-1005, 5:59-64; APPLE-1001, 14:3-19 ("lower-resistance path for magnetic flux, providing that they have adequate permeability and size to avoid

saturation.”). In fact, the ’337 patent offers no evidence of unexpected results or a difference in function when using paramagnetic materials to define flux paths, other than what has been already achieved by Gregorio-Ramsay-Wakuda’s solution (“magnetic substance” for the casing).

Claim 2

[2pre]-[2f]

243. Elements [2pre]-[2f] are the same as [1pre]-[1f]. Therefore, the discussion with respect to [1pre]-[1f] above, which explains that Gregorio-Ramsay-Wakuda provides the same limitations in claim 1, is incorporated herein by reference.

[2g] wherein the control component drives simultaneous oscillation of the moveable component at two or more frequencies to generate complex vibration modes.

244. Based on my review, the Gregorio-Ramsay-Wakuda combination renders obvious that the control component (see [1f]) causes the moveable component to simultaneously oscillate at multiple frequencies to thereby generate complex vibration modes, in accordance with Ramsay and Wakuda, in the same reasons as in the Wakuda-Ramsay combination (Ground 1). *See*, §VIII.B ([2g]). For example, Wakuda’s vibration generator system operates the movable body at two frequencies, such as a natural/resonant frequency and an envelope frequency

that is lower than the natural frequency, thereby generating complex vibration modes. APPLE-1005, 2:18-46, 9:12-10:42, Figures 5-6.

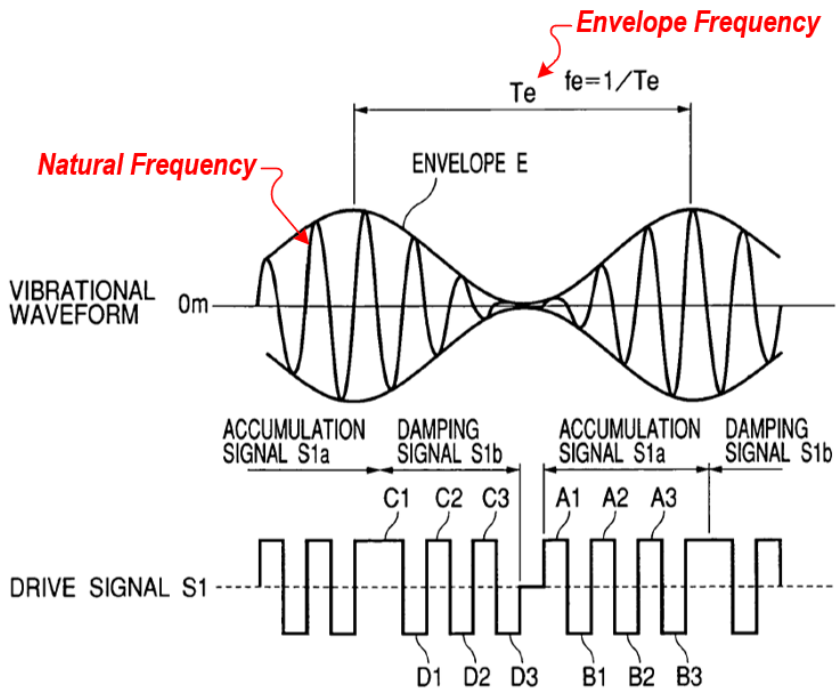

APPLE-1005, Figure 5 (annotated)

245. In addition, Ramsay describes that "one or <u>more</u> frequencies" can be entered for each haptic track. APPLE-1006, [0046]. Further, Ramsay enables users to "combine or mix different haptic tracks together if desired to provide a fuller haptic experience," and such mixed track files can be stored in memory. *Id.*, [0030], [0027]. Moreover, when multiple haptic tracks are mixed to overlap with one another in time, "two or more haptic tracks can be programmed to be simultaneous or partially overlapping in time in any desirable manner." *Id.*, [0047]. Through these teachings, a POSITA would have understood and found obvious that the Gregorio-Ramsay-Wakuda system would drive simultaneous

oscillation of the movable component at two or more frequencies, as included in a single haptic track or in a mixed track that combines multiple haptic tracks having different frequencies. A POSITA would also have recognized and found obvious that Ramsay's single haptic track having multiple frequencies or mixed haptic tracks with different frequencies combined would generate complex vibration modes, which would results in "a fuller haptic experience." APPLE-1006, [0030].

246. As noted above, I am aware that Patent Owner interpreted the term "control component" in claim 2 as a mean-plus-function limitation in co-pending litigation. Based on my review, the Gregorio-Ramsay-Wakuda combination provides one of Patent Owner's means-plus-function interpretations raised in the litigation—"microcontroller with internal or external memory; processor; CPU; microprocessor; and equivalents thereof." APPLE-1046, 12. Gregorio describes that "[p]rocessor 12 may be any type of general purpose processor, or could be a processor specifically designed to provide haptic effects, such as an application-specific integrated circuit ('ASIC')." APPLE-1004, 2:20-23, 4:31-36. Similarly, Ramsay's "end user device 10" includes "processor 14" and "memory 16" as the control component for operating "haptic actuating device 18." APPLE-1006, [0020], [0022]. "[P]rocessor 14 controls the functions of end user device 10 and can execute software stored in memory 16," which stores "[f]iles associated with haptic effects". *Id.*, [0024], [0027]. Further, Ramsay's "[p]rocessor 14 may be a

general-purpose or specific-purpose processor or microcontroller" and execute "programmable haptic design software" that "can be implemented in hardware, software, firmware, or a combination thereof" using, for example, "discrete logic circuitry, an application specific integrated circuit (ASIC), a programmable gate array (PGA), a field programmable gate array (FPGA), etc., or any combination thereof." APPLE-1006, [0025], [0043]. Therefore, a POSITA would have understood and found obvious that, in Gregorio-Ramsay-Wakuda, Gregorio's control component ("control means") is further implemented based on Ramsay's teachings of processor and memory. As such, a POSITA would have understood that Gregorio-Ramsay-Wakuda's teachings of the processor satisfies Patent Owner's above means-plus-function interpretation of "control component" in claim 1.

Claim 4

[4pre]-[4e]

247. Elements [4pre]-[4e] are the same as [1pre]-[1e]. Therefore, the discussion with respect to [1pre]-[1e] above, which explains that Gregorio-Ramsay-Wakuda provides the same limitations in claim 1, is incorporated herein by reference.

[4f] a control component that controls supply of power from the power supply to the driving component to cause the moveable component to oscillate at a frequency and an amplitude that are independently specified by user input received from the user-input features.

248. As I discussed in [1f] above, Gregorio-Ramsay-Wakuda's control component controls supply of power from the power supply to the driving component to cause the moveable component to oscillate at a frequency and an amplitude specified by user input received from the user-input features. In the Gregorio-Ramsay-Wakuda combination, those high-level frequency and amplitude parameters are independently specified by user input received from the user-input features (an on-device user interface that allows the user to separately input frequency and amplitude as taught by Ramsay). APPLE-1006, [0005], [0015].

249. As taught by Ramsay, the Gregorio-Ramsay-Wakuda vibration module includes "input/output device" and "a graphical user interface (GUI)" or "GUI" that is provided on a "screen" and provides a menu option. APPLE-1006, [0024], [0032], [0053]. Gregorio-Ramsay-Wakuda enables a user to independently enter and modify "a frequency of vibration and amplitude of vibration" through "on-device" GUI. APPLE-1006, [0015] ("allow a user to create and/or modify the parameters associated with haptic feedback on the target device itself through <u>on-device means</u>," such as "<u>[s]oftware and systems</u> can be embedded in the end user devices") (emphasis added). Ramsay describes that, through GUI, "[c]ertain parameters or characteristics of a haptic output or haptic track can be created, entered, changed, modified, etc." and that such "modifiable parameters may include a frequency of vibration and amplitude of vibration." APPLE-1006,

[0030], [0033] ("the parameters may include frequency and amplitude characteristics of a haptic output over a certain length of time.") (emphasis added), [0046] ("For example, haptic track editing module 36 enables user to modify such features as the … magnitude … and other characteristics related to the waveform parameters with respect to time during which the haptic track is played. ***In addition***, haptic track editing module 36 enables the user to enter one or more frequencies for the haptic track or even continually changing frequencies to be played along the length of the haptic track.") (emphasis added); [0053] ("magnitude adjusting mechanism"), [0054] ("'magnitude' may be called amplitude"), [0055]. Therefore, a POSITA would have understood and found obvious that, through the GUI, the user can independently set and modify various parameters including "a frequency of vibration and amplitude of vibration." *Id.*

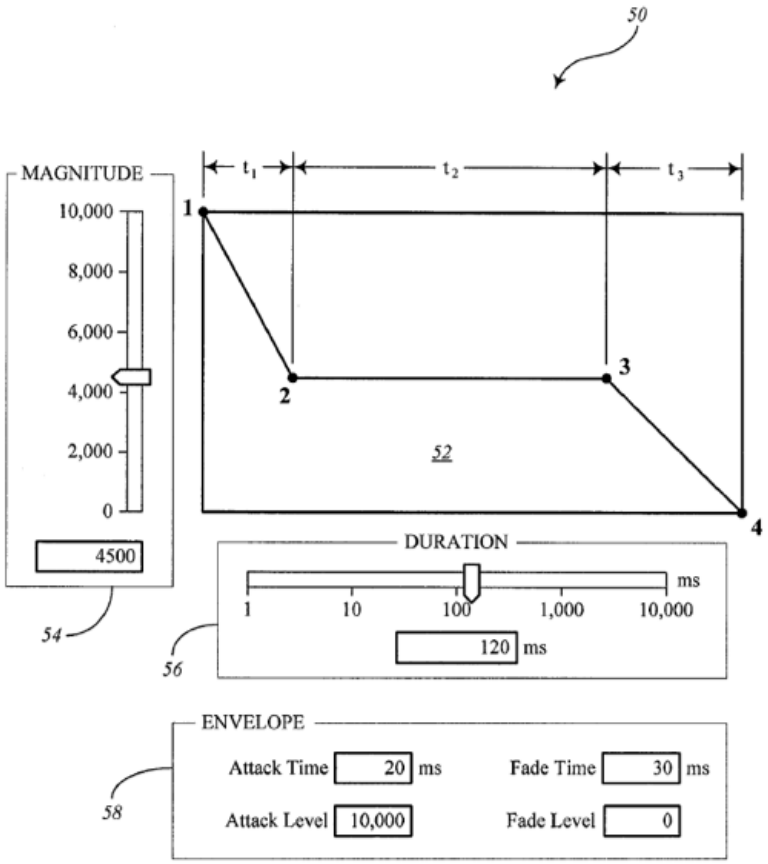

APPLE-1006, Figure 4

XI. GROUND 3B: The Gregorio-Ramsay-Tierling Combination Renders Obvious Claims 2, 3, and 4 (Plain-and-Ordinary Meaning and Patent Owner's Means-Plus-Function Construction)

A. The Predictable Combination of Gregorio-Ramsay and Tierling

250. In the Gregorio-Ramsay-Tierling combination, Gregorio-Ramsay's system would play Tierling's haptic effects using Tierling's effect mapping functionalities. A POSITA would have been motivated to play Tierling's haptic effects using Gregorio-Ramsay's system because Gregorio-Ramsay refers to haptic effects, which are based on the resonance frequency and high-level parameters such as magnitude, frequency, duration, but provides no specific examples of a

desired haptic effect. Accordingly, a POSITA would have looked at other references, such as Tierling, from the same assignee (Immersion) for examples of desired haptic effects that are based on the resonance frequency and high-level parameters such as magnitude, frequency, duration. APPLE-1008, [0031] ("control effect components or parameters of a haptic sensation, such as amplitude, waveshape, frequency, phase, duration, or delay of the haptic feedback to be output by a haptic device"). A POSITA would have understood that Tierling's example haptic effects would be applicable to Gregorio-Ramsay's linear actuator system. Notably, Tierling uses a rotary type actuator as an example, but the scheme is agnostic to a specific type of actuator.

251. Furthermore, a POSITA would have recognized that the resulting system benefits from Tierling's effect mapping technique, which "can drive a harmonic haptic device," like Gregorio's LRA, "without losing the low-frequency components" "by multiplying the low frequency desired output sinusoidal waveform with the higher frequency resonant mode waveform." APPLE-1008, [0110]. Maintaining the low frequency is particularly beneficial in haptic feedback. *See, e.g.*, APPLE-1017, [0080]-[0082] ("Waveform 258 provides a high frequency waveform at amplitudes that vary according to the low frequency, so that the user perceives the low frequency as riding on the high carrier frequency. The high frequency oscillations allow the actuator assembly to output strong tactile

sensations, while the low frequency motion provides an oscillation perceived by the user at the desired low frequency."). And Tierling explains how to produce haptic instructions by changing the form of haptic effect instructions to provide transformed effect instructions that render the desired haptic effect. APPLE-1008, [0030]-[0031].

252. Here again, a POSITA would have been further motivated to make this combination because it was the application of a known technique (Tierling's effect mapping) to a known system (Gregorio-Ramsay's haptic feedback system) ready for improvement to yield predictable results (benefits articulated above). A POSITA would have appreciated that the Gregorio-Ramsay-Tierling combination does not change the relevant features of either reference.

253. A POSITA would have had a reasonable expectation of success in making these modifications based on the structural similarity in Gregorio-Ramsay and Tierling, which, as noted above, are from the same company, and because the modifications would have been implemented largely through incorporating software instructions for executing Tierling's functionalities. Furthermore, the combination modifies Gregorio-Ramsay's system only to the extent that it is necessary to implement the software functionalities of Tierling. Accordingly, Gregorio-Ramsay's system otherwise remains unchanged and performs its intended operations.

B. Analysis of Gregorio-Ramsay-Tierling With Respect to Claims 2, 3, and 4

Claim 2

[2pre]-[2f]

254. As I discussed in Ground 3A above, the Gregorio-Ramsay-Tierling combination renders obvious [2pre]-[2f], as taught by, for example, Gregorio-Ramsay and supporting evidence. Further, elements [2pre]-[2f] are the same as [1pre]-[1f]. Therefore, the discussion with respect to [1pre]-[1f] in Ground 3A above, which explains that Gregorio-Ramsay provides the same limitations in claim 1, is incorporated herein by reference.

[2g] wherein the control component drives simultaneous oscillation of the moveable component at two or more frequencies to generate complex vibration modes.

255. Based on my review, the Gregorio-Ramsay-Tierling combination's control component (e.g., Gregorio-Ramsay's control component modified to include Tierling's effect mapping functionality) drives simultaneous oscillation of the movable component (e.g., Gregorio-Ramsay's magnet/mass) at two or more frequencies (e.g., the resonance frequency and a frequency lower than the resonant frequency) to generate complex vibration modes (shown below).

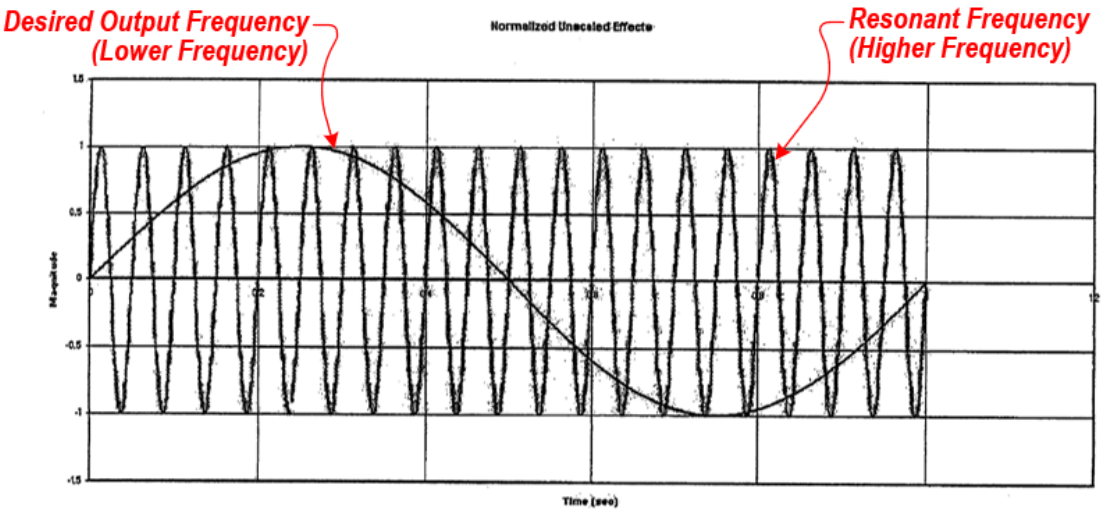

APPLE-1008, Figure 9 (annotated)

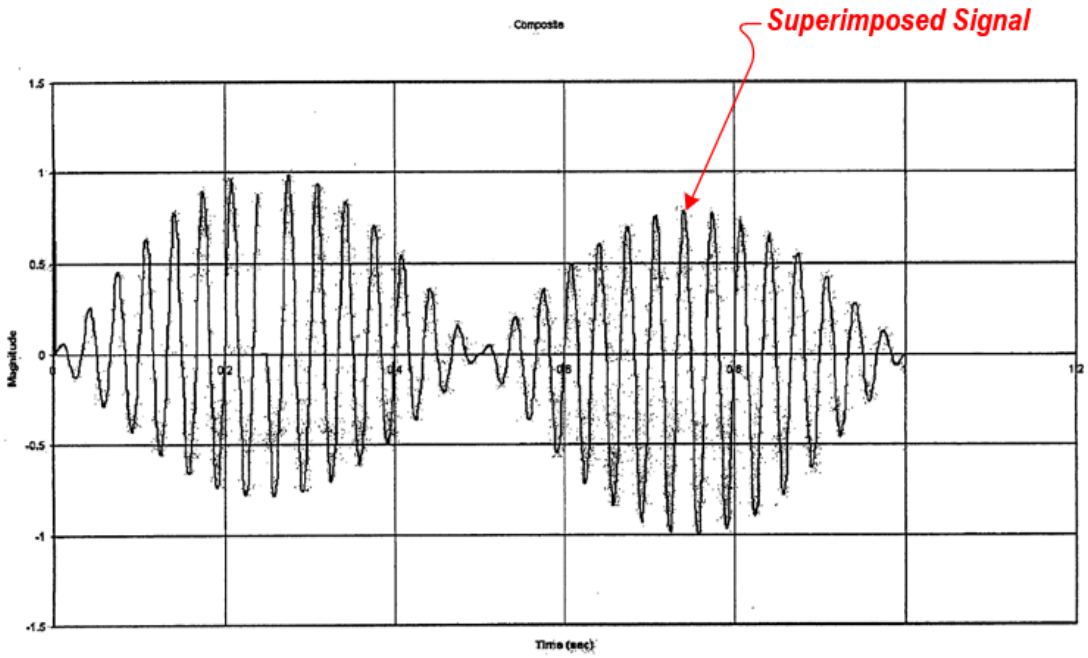

APPLE-1008, Figure 10 (annotated)

256. Tierling describes "a desired output sinusoidal response having a frequency of approximately 1 Hz <u>superimposed</u> on a higher frequency resonant mode of a harmonic haptic device 124. … This is accomplished by <u>multiplying</u> the

low-frequency desired output sinusoidal waveform with the higher frequency resonant mode waveform. The multiplication can be accomplished for example, in real-time. The resulting waveform is shown in FIG. 10." APPLE-1008, [0108] (emphasis added); *see also* [0031] ("the frequency of a first component can be modulated by the frequency of a second component").

257. Notably, Tierling's disclosure of superimposed signal matches the '337 patent's "complex vibrational mode in which two driving frequencies combine to produce a lower-frequency beat-wave form," as illustrated in Figures 22B-23. APPLE-1001, 13:31-59.

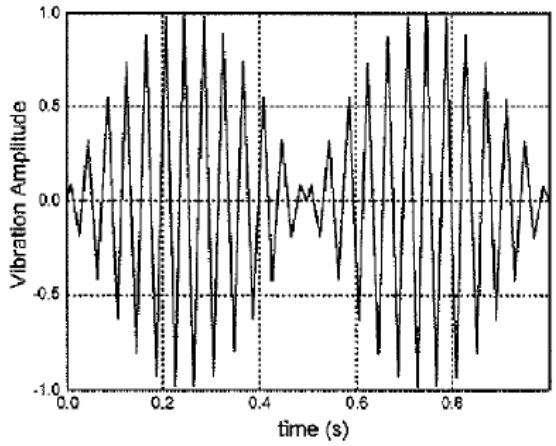

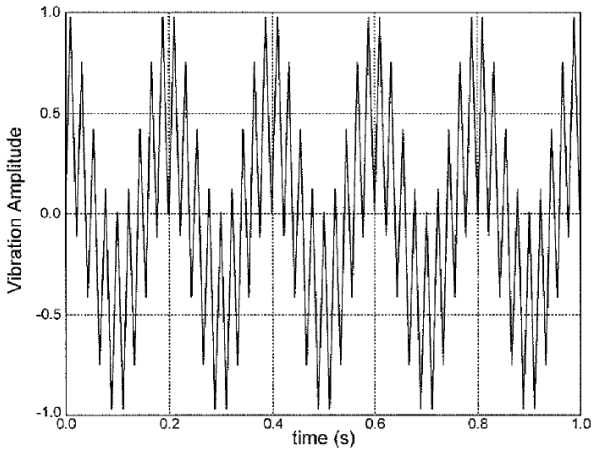

APPLE-1001, Figures 22B (left) and 23 (right)

Claim 3

[3] The linear vibration module of claim 2 wherein the complex vibration modes include: a primary oscillation frequency modulated by a modulating oscillation frequency; a beat frequency; and an aperiodic oscillation waveform.

258. Based on my review, the Gregorio-Ramsay-Tierling's complex vibration modes include a primary oscillation frequency (e.g., the resonance frequency) modulated by a modulating oscillation frequency (e.g., a lower desired frequency, *e.g.*, 1 Hz in the examples shown in [2]); a beat frequency (e.g., the difference between the resonance frequency and the lower desired frequency); and an aperiodic oscillation waveform (e.g., the waveform illustrated in Figure 10 of Tierling, which has an irregular amplitude).

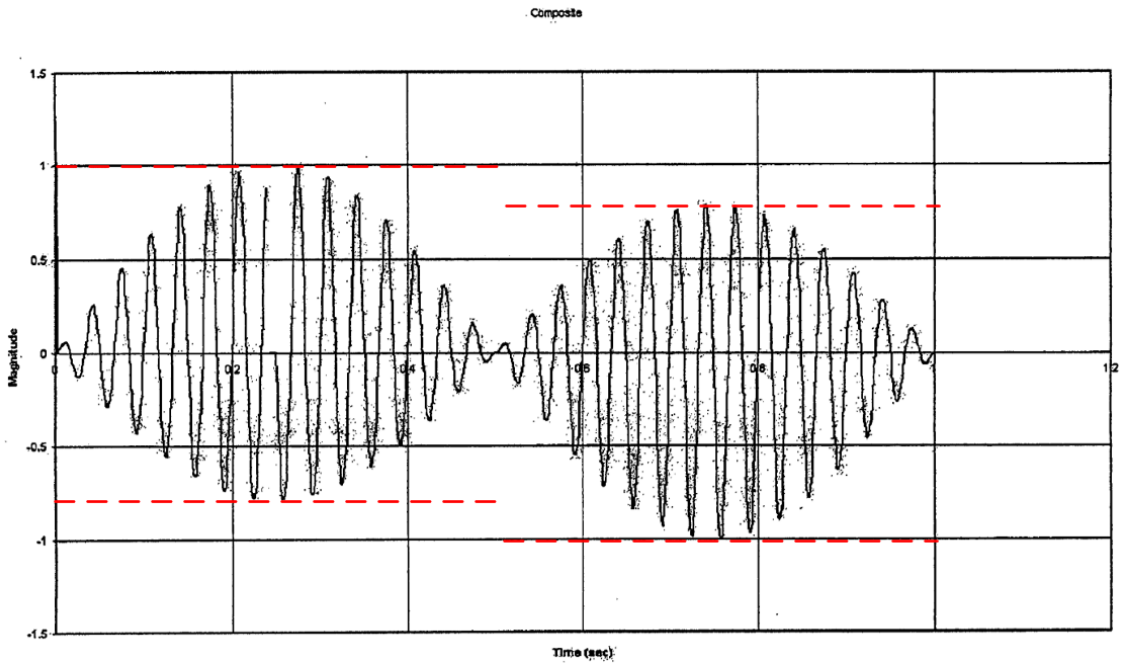

APPLE-1008, Figure 10 (annotated)

259. As I discussed with respect to [2g] above, "the frequency of a first component [a higher resonance frequency] can be modulated by the frequency of a second component [a lower, desired frequency]." APPLE-1008, [0031], [0110]-[0112] ("frequency domain envelope modulation"); Figures 9-10. As in the '337

patent, the difference between the higher resonance frequency and the lower, desired frequency is the beat frequency. *Compare* APPLE-1008, Figure 10, [0110]-[0112] *with* APPLE-1001, 13:29-31 ("a lower-frequency beat-wave form" that is produced by combining two driving frequencies, just like Tierling's "frequency domain envelop modulation"), Figure 23. And, as shown above in Figure 10 of Tierling, the amplitude of the beat frequency (indicated by red dashed lines) is irregular and therefore aperiodic.

260. Further, Tierling's effect mapper 306 uses three different transformation matrices 504, 506, 508, which are (1) "an initiation transformation matrix" to provide "initiation transformed effect instructions, such as a lead-in effect," (2) "a sustaining transformation matrix that transforms the incoming effect instructions 502 into transformed effect instructions," providing "the middle portion of each of the transformed effect instructions," and (3) "a termination transformation matrix that transforms the effect instructions into termination transformed effect instructions," providing "such termination effects as a braking pulse, or the like." APPLE-1008, [0096]-[0098]. Based on this, a POSITA would have recognized that Tierling's three different transformation matrices were designed to provide different haptic effects during each of three unique phases of the haptic effect (comprising different amplitudes and frequencies, etc.), thereby generating an aperiodic oscillation waveform.

261. It also would have been obvious to use Gregorio's resonance determination methods to generate complex vibration modes that include additional aperiodic waveforms wherein the resonance frequency changes irregularly over time. As explained in Gregorio, the resonant frequency of the LRA can change depending on various factors, such as a user's interaction with a haptic-enabled device. For example, "when an LRA is mounted to a floating device (i.e., system 10 held softly in a hand), the LRA resonant frequency shifts up significantly. Further, significant frequency shifts can occur due to external factors affecting the apparent mounting weight of LRA 18 in system 10, such as a cell phone flipped open/closed or the phone held tightly." APPLE-1004, 3:50-55. With this, Gregorio further discloses "constantly and dynamically determine[ing] the resonant frequency of [the] LRA" and adjusting the drive signal "to maximize the haptic feedback based on the determined resonant frequency." APPLE-1004, 3:65-4:5, 2:5-9. As a result, it would have been obvious to vary the resonant frequency of the Gregorio-Ramsay-Tierling system's complex vibration mode when, for example, the user aperiodically changes the position of the device, how the device is held, and/or the shape of the device (e.g., opening or closing a flip phone). The resulting waveform would have been an aperiodic waveform because the resonance frequency would change irregularly.

Claim 4

[4pre]-[4f]

262. As I discussed in Ground 3A above, the Gregorio-Ramsay-Tierling combination renders obvious [4pre]-[4f], as taught by, for example, Gregorio-Ramsay and supporting evidence. Therefore, the discussion with respect to [4pre]-[4f] in Ground 3A above, which explains that Gregorio-Ramsay provides the same limitations in claim 1, is incorporated herein by reference.

XII. GROUND 4A: Gregorio-Ramsay-Wakuda-Rossi-Aldrich Renders Obvious Claims 1, 2, and 4 (Both Parties' Means-Plus-Function Constructions)

263. For the reasons I describe in detail below, and based on my review of the '337 patent and its file history, and the prior art references cited herein, the Gregorio-Ramsay-Wakuda-Rossi-Aldrich combination includes all elements of claims 1-4 under the means-plus-function construction discussed above (refer to § III.C). I note that, for the same reasons I discussed above with respect to the Gregorio-Ramsay-Wakuda combination, a POSITA would have found it obvious to combine Gregorio, Ramsay, and Wakuda. Additionally, a POSITA would have further found it obvious to implement the combination in accordance with Rossi's switch circuit and Aldrich's suggestions of a "hill-climbing" control algorithm to tune the frequency input to maintain oscillation at a resonant frequency.

264. I note here again that the '337 patent's claims are directed to control of known linear resonant vibration modules using known control components and

circuitry. Gregorio provides a linear resonant vibration module having most features recited by the ’337 claims. Ramsay, Wakuda, Rossi, and Aldrich provide additional known details that would have been readily implemented in the combined system.

A. The Predictable Combination of Gregorio-Ramsay-Wakuda and Rossi

265. In the predictable combination, Gregorio-Ramsay-Wakuda’s actuator system includes a switch (e.g., H-bridge switch circuit) having a control signal input, splitter and control signal inverter, in accordance with Rossi, that receives the control signal from the processor, in accordance with Gregorio-Ramsay-Wakuda’s feedback control. Such a configuration would have yielded the predictable result of oscillating the actuator’s magnet by switching the polarity of drive signals generated based on Gregorio-Ramsay-Wakuda closed-loop concepts for feedback control. As such, the combination of Gregorio-Ramsay-Wakuda and Rossi is similar to the combination of Wakuda-Ramsay-Rossi.

266. Several reasons would have motivated a POSITA to modify Gregorio-Ramsay-Wakuda’s system based on Rossi’s teachings of switch (e.g., H-bridge switch circuit). In fact, Gregorio describes applying current through the coil in opposite directions to “push[] or pull[] on magnet.” APPLE-1004, 3:17-21 (“One current flow direction/polarity causes a push action and the other a pull action.”). A POSITA would have readily recognized that an H-bridge switch was a well-

known example circuit to implement the Gregorio-Ramsay-Wakuda system's change in "current flow direction/polarity" for "push" and "pull" actions. APPLE-1023, 7:47-50 ("well-known H-bridge circuit").

267. Although Gregorio-Ramsay-Wakuda does not explicitly describe complete implementation details of a circuit for switching the "current flow direction/polarity," prior art systems such as Rossi demonstrated the conventional knowledge of implementing such a circuit (e.g., H-bridge) to provide oscillating power. *See, e.g.*, APPLE-1020, 1:65-2:11, 3:43-55, Figures 4, 6.

268. To be clear, the predictable combination is not relying on bodily incorporation of Rossi's components. The combination relies on suggestions related to Rossi's H-bridge switch circuit control for alternating drive direction, which would have been predictably implemented in the Gregorio-Ramsay-Wakuda system.

269. A POSITA would have been motivated to implement a switch (e.g., H-bridge circuit) in accordance with Rossi's suggestions, in the Gregorio-Ramsay-Wakuda system for several advantages. Given the similarity between Gregorio-Ramsay-Wakuda (Ground 3A) and Wakuda-Ramsay (Ground 1), the reasons discussed for Wakuda-Ramsay-Rossi (Ground 2) would have similarly motivated a POSITA to modify Gregorio-Ramsay-Wakuda's system based on Rossi's teachings of switch.

270. First, a POSITA would have been motivated to do so based on Gregorio's teachings to switch the "current flow direction/polarity" for "push" and "pull" actions. APPLE-1004, 3:17-21. Because Gregorio-Ramsay-Wakuda does not expressly disclose specifics of implementing the switching scheme, a POSITA would have predictably looked toward other teachings, such as Rossi, for implementation details in furtherance of Gregorio's objectives. Rossi plainly demonstrates the known benefits of an H-bridge that receives as input a drive signal (e.g., "IN1"), which is then split and inverted to generate complementary internal signals. APPLE-1020, Abstract, 1:65-2:49; 2:56-3:54; FIGS. 4, 6. A POSITA would have recognized the benefits from Rossi's straightforward teachings of providing complementary drive signals for respective sets of the four H-bridge transistors, such that current/voltage is applied in one of two opposite directions through the coil. Rossi explicitly indicates the predictable benefit of a configuration that is effective to "functionally switch the load L between the supply node Vs, and virtual ground nodes," thereby reliably driving the movable magnet head of the actuator. APPLE-1020, 2:4-12.

271. Second, a POSITA would have been motivated to combine Gregorio-Ramsay-Wakuda and Rossi to avail the system of a simple, cost-effective, and reliable circuit design. For example, the resulting system would require a small number of components. In fact, the power demands of LRAs are very modest and

thus switching devices are lightly loaded and more reliable. Rossi describes diodes within the H-bridge which protect the devices from high-voltage which can be applied at the LRA outputs from sources within or external to the LRA. A POSITA would have recognized, from Rossi's description, the benefits of controlling the four transistors of the H-bridge using a control signal from the "processor" that is split and inverted. Doing so reliably results in complementary internal signals (e.g., IN1 and $\overline{\text{IN1}}$), which would have promoted simplicity in the control signal generation and the circuit to deliver the drive signal to the coil.

272. Third, a POSITA would have been prompted to combine Rossi and Gregorio-Ramsay-Wakuda because doing so was the application of known techniques (Rossi's implementation of an H-bridge circuit) to a known device (Gregorio-Ramsay-Wakuda's system that operates to switch polarity of current) ready for improvement to yield predictable results (benefits articulated above). A POSITA would have had a reasonable expectation of success in making the proposed modifications based on the similarity of the function of the H-Bridge switch circuit in Rossi and Gregorio-Ramsay-Wakuda, and because the modifications would have been implemented largely through routine circuit design considerations and software instructions for generating the control signal.

B. The Predictable Combination of Gregorio-Ramsay-Rossi and Aldrich

273. In the predictable combination, Aldrich's control algorithm is implemented in Gregorio-Ramsay-Wakuda-Rossi's system that utilizes sensor feedback to control vibration output about a resonant frequency. In the combined system, sensor outputs would have been processed using control algorithm techniques in accordance with Aldrich's suggestions, which replace Gregorio's suggested operation based on the "monitoring period." APPLE-1004, 4:22-28, 5:53-55. For example, to generate control signals that maintain oscillation at/near resonance, the drive frequency would have been incremented or decremented, and a currently measured vibration strength parameter, such as the measured "LRA vibration amplitude" (APPLE-1004 at 4:42-48), compared with a previously measured vibration strength parameter. APPLE-1021, 2. In accordance with Aldrich's suggestions, if the increment or decrement results in an increased vibration strength, then the direction of change (increase or decrease, respectively) of frequency is accepted and another such change (increment or decrement, respectively) is made during the following sampling period. *Id.* If the increment or decrement results in a decrease in vibration strength, then the direction of change of frequency during the following sampling period is reversed. *Id.* This is because the decreased vibration strength indicates that the frequency was incremented/decremented past the resonant peak.

274. Given the similarity in implementing Gregorio-Ramsay-Wakuda-Rossi (Ground 4A) and Wakuda-Ramsay-Rossi (Ground 2) based on Aldrich's "hill-climbing" control algorithm, the analysis of modifying Wakuda-Ramsay-Rossi based on Aldrich (Ground 2) similarly applies for combining Gregorio-Ramsay-Wakuda-Rossi with Aldrich.

275. Aldrich describes a process like the '337 algorithm described with reference to Figure 7A that Aldrich refers to as "hill-climbing," as I discussed previously (refer to § VII.F). As an initial matter, I note that a POSITA would have implemented Aldrich's hill-climbing technique in the combined system using a Boolean value to indicate whether the frequency was being increased. By doing so, the Boolean value indicates a current operational state of the hill-climbing algorithm. A POSITA recognized the use of Boolean values as a conventional way of tracking and maintaining the state of a system, and would have been selected as a matter of routine implementation based on Aldrich's suggestions for switching between incrementing and decrementing frequency. *See, e.g.*, APPLE-1026, 29 (discussing uses of Boolean variables that were conventional). Based on my knowledge and experience in the field, and my review of Aldrich, a POSITA would have predictably utilized a Boolean variable to track the operational state of the algorithm—here, to indicate a direction of change of frequency—based on

Aldrich's description. APPLE-1021, 2 ("direction of change of frequency during the following sampling period is reversed").

276. Based on my knowledge and experience, and review of the prior art, a POSITA would have recognized that the software of the microprocessor of the combined system set local variables to default values. Doing so would have been a routine implementation detail so that control signals from the microprocessor were generated to produce a default oscillation. From there, consistent with Gregorio and Aldrich, the oscillation, and control signals driving the oscillation could then be adjusted as appropriate through feedback control. Likewise, such a technique would have been obvious from Gregorio and Aldrich, in order to effectively initiate operation and begin feedback control. Based on my knowledge and experience in the field, a POSITA would have been motivated to initialize the relevant variables to default values to promote reliable and predictable operation. For example, a POSITA would have known, as a matter of basic programming practices, that not initializing local variables could led to problematic results. I note that it is common practice in virtually all computer programming to initialize local variables to default values. In some computer systems, when a local variable is created, memory is assigned to the local variable but whatever random data was in that memory location is now in the corresponding local variable. In some other computer systems, local variables are always cleared to zero before execution. In

either case, undesirable results such as freq set equal to a random number (unpredictable operation) or freq set equal to 0 (undesirable operation) would occur if the local variables were NOT initialized to default values. For this reason, a POSITA would initialize local variables to meaningful values as a matter of routine in programming. I also note that a POSITA would have known that initializing variables can also mean initializing or setting variables to user-defined initial states, which is a technique supported when implementing a vibrational system using a microprocessor and local memory, like in the combination. That is, the initialization would have been set in firmware and/or in software to facilitate initiation of operation in a predictable and repeatable manner.

277. Additionally, when implementing the linear resonant vibration module in accordance with Gregorio, Ramsay, Wakuda, and Aldrich, a POSITA would have been motivated to utilize integer values when processing sensor signals. The sensor signals from the sensors are converted to an integer value (e.g., by an analog-to-digital (A/D) converter), to facilitate digitally processing the signals, and to provide a conventional manner of data handling (integer values can be easier to handle digitally, including using hardware), and to facilitate efficient computation and processing of the force values represented by the sensor signals. APPLE-1021, 2. A POSITA would have readily recognized the efficiency and effectiveness of utilizing an integer value (e.g., versus a decimal/fractional value).

Typically, sensor values in digital systems are first represented and stored as integer values. From there, the values may optionally be converted to non-integer values (such as floats). A POSITA would have thus been led to use integer values, reducing the need for additional conversion to non-integer values. Additionally, a POSITA would have viewed the use of integer values as a mere design choice between either integer values or non-integer values. *Id*. A POSITA would further understand that converting an integer value to a representation such as floating point would add no information.

278. Again, the predictable combination is not relying on bodily incorporation of Aldrich's components. The combination relies on suggestions related to Aldrich's "hill-climbing control algorithm" for "tracking to find and remain within the vicinity of the resonance" (APPLE-1021 at 2), which would have been predictably implemented in the Gregorio-Ramsay-Wakuda-Rossi system.

279. Multiple reasons would have prompted a POSITA to implement a "hill-climbing" control algorithm, in accordance with Aldrich's suggestions, in the Gregorio-Ramsay-Wakuda-Rossi system.

280. First, a POSITA would have combined Gregorio-Ramsay-Wakuda-Rossi and Aldrich to avail the system of a known feedback algorithm for targeting a resonant frequency, thereby improving Gregorio-Ramsay-Wakuda-Rossi's

system with the known benefits from the algorithm. In fact, Gregorio already describes a technique of monitoring sensor outputs to determine a resonant frequency and adjusting the control signal to maintain oscillation at/near resonance. APPLE-1004, 3:65-5:55. However, Gregorio's technique introduces a "monitoring period (approximately 10%) of the drive cycle," during which "drive circuit 16 'listens' or monitors and receives magnetic back EMF (i.e., the voltage generated by the internal motion inside LRA 18) from LRA 18." APPLE-1004, 4:22-28. During the monitoring period, a drive pulse is not applied to the actuator. *Id.*; *see also* 5:53-55 ("Switch 420 is also used to switch from the drive period (switch is closed) to the monitoring period (switch is open).").

281. Therefore, a POSITA would have readily recognized that the monitoring period would create a period as part of the drive cycle where a user receives no or reduced haptic feedback depending on the duration of the period. Further, during the monitoring period, the amplitude will decay due to friction and similar (unavoidable) energy losses in the LRA. In fact, Gregorio describes no algorithmic control during the monitoring period. Moreover, a POSITA would have understood that Gregorio's monitoring period would only receive weak EMF signals of the moving mass because the movement of the mass significantly decreases in amplitude during the monitoring period. APPLE-1004, 5:63-65 ("An output signal 506 gradually is reduced in amplitude but is still active during

monitoring period 530 due to the back EMF generated by the moving mass of LRA 18.”). Understanding these shortcomings and thus attempting to improve Gregorio-Ramsay-Wakuda-Rossi’s monitoring/adjusting method (e.g., in other ways than what Gregorio describes), a POSITA would have predictably looked to other teachings such as Aldrich for such details, especially where Aldrich explicitly describes driving an actuator at/near resonance using such control algorithm techniques. APPLE-1021, 1-3.

282. Second, a POSITA would have combined Gregorio-Ramsay-Wakuda-Rossi and Aldrich to implement feedback control according to Aldrich’s technique that continuously updates the control outputs throughout operation of the system. The algorithm continuously facilitates comparison of current and previous parameters throughout device operation (without interruption by Gregorio’s monitoring period) so that the control outputs (e.g., frequency of the control signal) can be adjusted to maintain oscillation at/near resonance frequency, furthering the explicit objectives of Gregorio-Ramsay-Wakuda-Rossi and Aldrich.

283. Third, here again, this combination was the application of known techniques (Aldrich’s “hill-climbing” feedback control algorithm) to a known system (Gregorio-Ramsay-Wakuda-Rossi’s system that uses feedback control) ready for improvement to yield predictable results (benefits articulated above).

284. Moreover, a POSITA would have had a reasonable expectation of success in making the proposed modifications based on the applicability of Aldrich's method to the resonant system architectures in Gregorio-Ramsay-Wakuda-Rossi, and because the modifications would be largely implemented via software executed by the microprocessor. In the combined system, sensor outputs would have been received and processed by Gregorio's processor using at least a "hill-climbing control algorithm" "to find and remain within the vicinity of the resonance," in accordance with Aldrich's suggestions. APPLE-1021, 2. For example, it would have been obvious to a POSITA to modify Gregorio's processor to include a control program based on Aldrich's algorithm. The control program would have been included with existing "instructions executed by processor" of Gregorio. APPLE-1004, 2:44-50. Implementing Aldrich's algorithm as a control program for applying continuous feedback control about a resonant frequency would have been a routine software change, requiring application of known coding techniques.

C. Analysis of Gregorio-Ramsay-Wakuda-Rossi-Aldrich with respect to Claims 1, 2, and 4

Claim 1

[1pre]-[1e]

285. As I discussed in Ground 3A above, the Gregorio-Ramsay-Wakuda-Rossi-Aldrich combination renders obvious [1pre]-[1e], as taught by, for example, Gregorio-Ramsay-Wakuda and supporting evidence.

286. In addition, based on my review, the Gregorio-Ramsay-Wakuda-Rossi-Aldrich combination renders obvious [1e], as taught by, for example, Gregorio-Ramsay-Wakuda and supporting evidence. *See*, Ground 3A. In particular, Gregorio's vibration module includes a driving component ("electric coil 28") that drives the moveable component ("movement/oscillation of magnet 27") to oscillate within the housing ("casing 25") "when current flows thru coil 28 [and] a magnetic field forms around coil 28." APPLE-1004, 3:12-28, 2:10-20.

287. I also note that the combination likewise includes a driving component according to the means-plus-function interpretation, as I discussed previously in my analysis of Element [1e] in Ground 3A.

[1f] a control component that controls supply of power from the power supply to the driving component to cause the moveable component to oscillate at a frequency and an amplitude specified by user input received from the user-input features; and

288. Under the means-plus-function construction (§III.C), Gregorio-Ramsay-Wakuda-Rossi-Aldrich's vibration module includes the recited control component. As shown in [1pre], the resulting system includes "processor" coupled to memory, as in Gregorio's "haptic feedback system." Ground 3A; APPLE-1004, 2:18-21.

289. Given the similarity between Gregorio-Ramsay-Wakuda-Rossi-Aldrich's system (Ground 4A) and Wakuda-Ramsay-Rossi-Aldrich's system (Ground 2), the analysis of Ground 2 ([1f]) based on Rossi, Aldrich, and supporting evidence similarly applies for Gregorio-Ramsay-Wakuda-Rossi-Aldrich.

290. The Gregorio-Ramsay-Rossi-Aldrich combination's vibration module includes the recited control component under the means-plus-function construction. As discussed in §III.C, I understand that the corresponding structure for "control component" is (1) a processor (e.g., microprocessor or CPU) and (2) a switch, the processor being programmed with (3) the algorithm described with respect to Figures 7A-7C of the '337 patent, and equivalents thereof.

291. As I discussed with respect to [1pre] and [1f] in Ground 3A above, Gregorio-Ramsay-Wakuda's "haptic feedback system" includes "processor 12" that is coupled to memory 20, as taught by Gregorio. APPLE-1004, 2:18-21; Ground 3A. "Memory 20 stores instructions executed by processor 12," which "includes an LRA Drive with Resonant Frequency Determination module 22 which are instructions that, when executed by processor 12, generate drive signals for LRA 18." APPLE-1004, 2:36-39, 2:44-50. Similar to Gregorio, Ramsay describes that its system includes "processor 14" and "memory 16" as the control component. APPLE-1006, [0020], [0022], [0024] ("processor 14 controls the

functions of end user device 10 and can execute software stored in memory 16."), [0027] (describing memory 16 stores "[f]iles associated with haptic effects").

292. Further, the combination includes a switch (e.g., H-bridge switch) as suggested by Rossi. A POSITA would have found it obvious, based on the Gregorio-Ramsay-Wakuda-Rossi-Aldrich combination, that the microprocessor is programmed to provide a control output to the H-bridge switch for controlling the direction of the drive signal through the coil (e.g., directional signal d). For example, a control signal is output from the microprocessor to a transistor of the H-bridge switch to control whether the transistor is in an open or closed state, providing the direction signal. In the resulting system, the switch receives a directional signal (e.g., at "IN1") that selects a corresponding direction of the two opposite directions in which the driving component drives the moveable component. APPLE-1020, 1:65-2:15; 3:44-55. Rossi describes that the "two pairs of switches (namely SW1, SW4 and SW2, SW3) arranged in a bridge configuration functionally switch the load L between the supply node Vs, and virtual ground nodes," dependent on the directions signal d received by the switch at "IN1." *Id.*

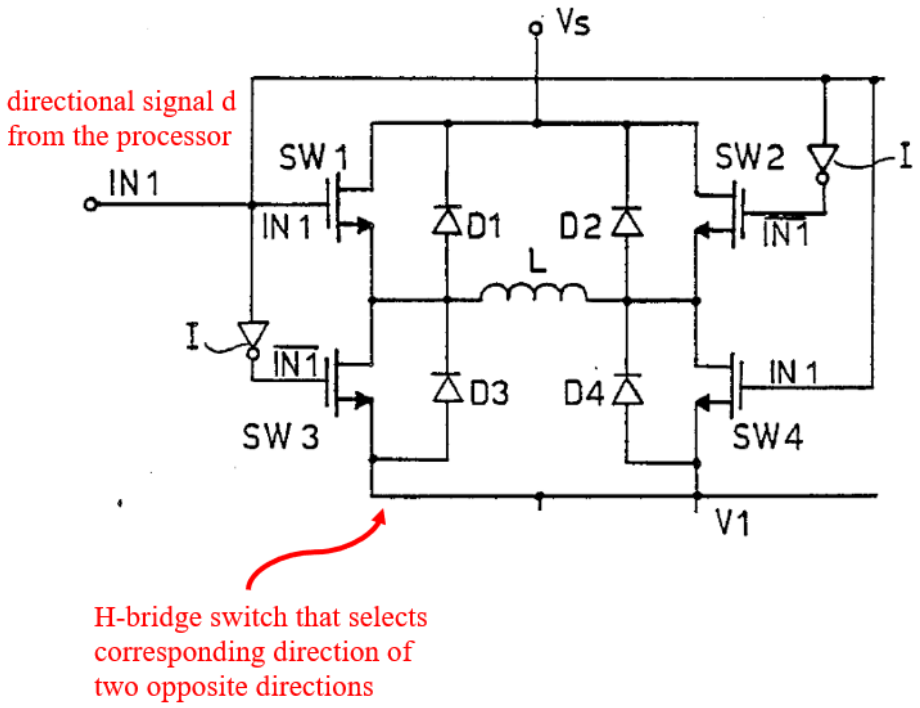

APPLE-1020, Figure 6 (partial, annotated)

293. Moreover, the Gregorio-Ramsay-Wakuda-Rossi-Aldrich combination provides that the processor is programmed with the algorithm described with reference to Figures 7A-7C of the ’337 patent under the means-plus-function construction. *See* §III.C.

294. Step 702 of the ’337 patent’s algorithm begins execution upon a power-on event. APPLE-1001, 6:48-50. The software instructions of the processor of the combined system also begins execution upon a power-on event (e.g., invoked by a user through a power button or other user control). Indeed, the combined system includes user-input features as taught by Gregorio-Ramsay-

Wakuda ([1d]), which a POSITA would have readily recognized included a power on/off button and were used to power on/off the system. *See* analysis of [1d].

295. In step 702, "various local variables are [then] set to default values." APPLE-1001, 6:50-61 ("step 702" setting the mode, strength, lvo, lv1, freq, d, and inc variables to default values). Based on my knowledge and experience, and review of the prior art, a POSITA would have recognized and found obvious that the software of the processor of the combined system sets the same local variables to default values, so that the control signal is generated to produce oscillation, which are then adjusted as appropriate when implementing feedback control. Further, in the combined system, the default values (e.g., mode and strength) include values representing selections made by user input to the user-input features, as taught by Ramsay.

296. First, I note that it is common practice in virtually all computer programming to initialize local variables to default values. In some computer systems, when a local variable is created, memory is assigned to the local variable but whatever random data was in that memory location is now in the corresponding local variable. In some computer systems, local variables are always cleared to zero before execution. In either case, undesirable results such as freq set equal to a random number (unpredictable operation) or freq set equal to 0 (undesirable operation) would occur if the local variables were NOT initialized to default

values. For this reason, a POSITA would initialize local variables to meaningful values as a matter of routine in programming.

297. I note that a POSITA would have been motivated to set or initialize one or more local variables to default values. A POSITA would have recognized doing so as facilitating initiation of the actuator close to expected and/or user-selected operating parameters, and promoting reliable and consistent initiation of operation. I further note that doing so was well known at the time both in software in general (above) and within related technologies. *See, e.g.*, APPLE-1024, 5:25-37 ("At the start of the motor, the controller 60 allows to generate a few initial drive pulses of a fixed width at a fixed timing calculated in view of the natural frequency [i.e., resonance frequency] of the oscillator 30, until the oscillator 30 reaches a stable oscillation where a predetermined oscillation amplitude is accomplished. Thereafter, the controller 60 becomes responsible for determining a correct drive point of supplying the electric current in each half cycle of the oscillation as well as for varying the time of supplying the electric current, i.e., the pulse width of the drive pulse to keep the constant oscillation amplitude."); *see also* APPLE-1006, [0028] ("ROM 28 may be configured to store a library of preset haptic tracks that can be used as a general starting point for creating new tracks. In this case, the preset tracks can be protected from being overwritten in order to be available whenever the user wishes to create a new file. ROM 28 can also store

haptic track files created or modified by the user and can also store mixed track files, which include multiple haptic tracks combined together. The user is given the capability to assign new filenames to newly created or modified haptic track files and mixed track files. ROM 28 can further store files that include association information for associating certain track files with specific events related to end user device 10."), [0063] ("In these examples, a new file can represent a haptic track from a library having default values that can be used as guidelines or starting points for creating a new track file."). Indeed, a POSITA would have been motivated to set default values for these specific local variables to facilitate initiation of the actuator close to expected and/or user-selected operating parameters.

298. The following paragraphs will demonstrate that each specific initialization of step 702 is disclosed by the Gregorio-Ramsay-Wakuda-Rossi-Aldrich combination.

299. A POSITA would have found it obvious that the variables initialized to default values or values representing user-selections include variables consistent with the seven variables recite by the '337 patent, according to the means-plus-function construction. For example, the combination includes a mode that specifies a current operational mode of the device. Indeed, the combined system uses multiple different "haptic effects" (operational modes) based on "high level

parameters" including "magnitude, frequency and duration" as taught by Gregorio. APPLE-1004, 2:25-30. Further, the combined system stores "a library of preset haptic tracks" and multiple different "haptic track files" (operational modes) that are created based on haptic parameters such as "a frequency of vibration and amplitude of vibration" or "representations or values describing the aspects of the haptic track," as taught by Ramsay. APPLE-1006, [0028], [0030], [0034], [0042], [0049], [0058]. Based on my knowledge and experience in the field, and the description of the prior art, a POSITA would have found it obvious that the set-point values include variables consistent with the seven variables recited by the '337 patent and shown in Figure 7A. In particular, the '337 patent indicates seven variables that are set to default values, including:

(1) mode, which indicates the current operational mode of the device;

(2) strength, a numerical value corresponding to the current user-selected strength of operation, corresponding to the electrical current applied to the coil;

(3) lv10, a previously sensed vibrational strength;

(4) liv11, a currently sensed vibrational strength;

(5) freq, the current frequency at which the direction of current is alternated in the coil:

(6) d, the control output to the H-bridge switch; and

(7) inc, a Boolean value that indicates that the frequency is currently being increased.

300. The ’337 patent describes “modes” as 1) “In the default mode, the LRVM uses continuous feedback control to optimize the vibrational force produced by the LRVM by continuously seeking to operate the LRVM at a frequency as close as possible to the resonant frequency for the LRVM.” (col. 7, lines 48-52) and 2) “More complex vibrational modes may systematically and/or periodically alter the frequency or produce various complex, multi-component vibrational modes useful in certain applications, appliances, devices, and systems.” (col 7, lines 55-58). It would have been obvious to a POSITA that these modes correspond to the stored multiple different “haptic effects” or “haptic tracks” of the combined system, consistent with Gregorio’s and Ramsay’s suggestions.

301. For example, Gregorio describes that “[p]rocessor 12 can <u>decide what haptic effects are to be played</u> and the order in which the effects are played based on high level parameters.” APPLE-1004, 2:25-30 (emphasis added). Further, Ramsay describes “ROM 28 may be configured to store a library of preset haptic tracks.” APPLE-1006, [0028]. Therefore, the combined system includes multiple different “haptic effects” or “haptic tracks” that specify a current operational ***mode*** of the device, consistent with Ramsay’s suggestions, for example.

302. The use of a variable to indicate to the control program the operational mode the device is currently operating in is straightforward from Ramsay's description, and has recognized benefits. For example, it was known to POSITA at the time that using variables can allow modes of operations to be linked to operational states for process flows. For example, based on a variable set for an operating mode, a specific series of steps can be taken to accomplish a desired result. In addition, the use of variables was a known way to facilitate changing the operating mode. It was well known in programming to set a variable to a specific value depending on a desired state or outcome.

303. The combined system would operate based on one of the stored pre-defined haptic effects (***default operational mode***), such as an effect in which feedback control maintains oscillation at the mechanical resonant frequency, when initialized. Further, the combined system would operate based on one of the haptic tracks (i.e., mode) created or modified by the user through GUI (i.e., the mode set to values representing selections made by user input to the user-input features), as taught by Ramsay. *Id.*; §§VII.C & X.A.

304. I note that, like the modes recited by the '337 patent, the combined system includes one or more alternative or complex modes of operation that systematically and/or periodically alter the frequency or produce various complex, multi-component vibrational modes. For example, Ramsay describes that "ROM

28 can also store haptic track files created or modified by the user and can also store mixed track files, which include multiple haptic tracks combined together" and that the user "has the opportunity to modify certain characteristics of the haptic track as desired." APPLE-1006, [0028], [0035]. "Certain parameters or characteristics of a haptic output or haptic track can be created, entered, changed, modified, etc. For example, the modifiable parameters may include a frequency of vibration and amplitude of vibration. Also, the frequency and amplitude can be set to change over time. In addition, the user is able to combine or mix different haptic tracks together if desired to provide a fuller haptic experience. In this way, a user is capable of programming or customizing a haptic track or track mix to one's liking." *Id.*, [0030]; *see also id.*, [0035]-[0039], [0047], [0057]-[0059]. Again, as discussed in Ground 3A ([2g]), Ramsay describes multiple haptic tracks being mixed to drive simultaneous oscillation of the movable component at two or more frequencies. APPLE-1005, [0027], [0030], [0046]-[0047]. Indeed, Ramsay describes "ROM 28 may be configured to store a library of preset haptic tracks" having such parameters, and/or that are combined. APPLE-1006, [0028].

305. The combination includes a ***strength*** variable (magnitude). For example, Gregorio describes a magnitude variable as one of the "high level parameters that define a particular haptic effect." APPLE-1004, 2:28-30. Further, Ramsay describes that the magnitude variable is user-configurable through

"input/output device" including GUI. APPLE-1006, [0022]-[0026], [0030]-[0033], [0046], [0053]-[0055]; §§VII.C & X.A; *see* Ground 3A, [1f]; APPLE-1023, 9:65-10:3 ("The magnitude or strength of the force is dependent on the magnitude of the current that is applied to the coil."); APPLE-1023, 17:32-51 ("the gain 332 (or magnitude) of the force" and "gain of 100"), Figure 6; APPLE-1025, 6:19-47 ("increasing a period of time T during which the current is supplied and/or by increasing the maximum current"). The higher the current through the coil, the higher the magnitude or strength of the vibration force. Accordingly, the combined system would operate based on one of the strength settings (as part of the predefined haptic effects) when it is powered on.

306. Based on my knowledge and experience in the field, and my review of the prior art, a POSITA would have recognized the known advantages associated with controlling or modulating the frequency input and/or power (i.e., current amplitude or magnitude) input to control vibrational output – the vibrational output being directly linked to the frequency and the magnitude of the current directed through the coil. By doing so, the magnitude of current (e.g., received by the power supply input of the H-bridge) could be adjusted to adjust the vibrational output based on available power and changes to the resonance frequency that might occur over time.

307. The combination also includes ***sensed values*** that include previously-sensed (lv0) and currently-sensed (lv1) vibrational strength values. The combined system includes a currently sensed vibration strength value and a previously sensed vibration strength value that are compared in carrying out the control algorithm. APPLE-1021, 2 (describing evaluation of frequency change results in increase or decrease of vibration output). As I discussed above, these variables are likewise initialized with default values that provide a starting point for operation (e.g., zero), which are then updated based on sensed values during operation. *Id.*

308. The combination includes a ***frequency*** (freq) at which current is changed in the coil, and the directional ***control signal*** (d) from the microprocessor. APPLE-1021, 1-3 ("excitation frequency"). In the combination, the frequency variable is initialized with default values to provide a starting point for operation (e.g., based on the stored "haptic effect" or "haptic track," or an assumed resonant frequency). For example, Gregorio describes use of a default frequency value upon initialization based on an "assumed" resonant frequency. APPLE-1004, 4:20-22. Further, Wakuda describes use of a default frequency value upon initialization based on "the natural frequency (resonance frequency) of the movable body 6" that is "determined by a mass of the movable body 6 and the spring constants (spring constants in the neutral position shown in FIG. 1) of the energizing members 9." APPLE-1005, 7:26-43. Further, the directional signal, for

example, is initialized with a default value (e.g., high or low), which is then reversed during operation to induce oscillation according to the feedback control program. The default value is a high or low value. The initial direction of the directional signal d is an implementation choice, and can depend on the structure of the LRVM, design characteristics, operational characteristics, desired initial direction of movement of the movable mass, etc., and is switched between the high and low values throughout operation. APPLE-1019 ("Shahoian"), Figure 5; *see also* APPLE-1020, 1:65-2:15; 3:44-55. I note that the '337 patent itself does not describe the initial value, or any express any particular significance to the initial value.

309. The combined system, consistent with Aldrich, steps through frequencies at which the current is changed in the coil. The combination includes a ***Boolean value*** (inc) that indicates that the frequency is being increased. The Boolean value tracks the status of frequency increase/decrease to implement the comparison in accordance with Aldrich's control algorithm, as a matter of routine implementation. As I discussed above, Boolean variables for such applications are a basic programming tool that a POSITA was well-aware of. *See* APPLE-1026, 29.

310. In "step 704," the '337 patent control program "waits for the next event." APPLE-1001, 6:61-65. In the combined system, the software executing

on the microprocessor waits for the next event, such as a sensor input to be used in determining the control signal, or a user input to power down the device or modify haptic effect characteristics. APPLE-1006, [0022]-[0026], [0030]-[0033], [0046], [0053]-[0055]; *see* Ground 1, [1f], [4f]. When sensor signals are received by the microprocessor, the control outputs are adjusted accordingly. *See, e.g.*, APPLE-1004, 3:65-4:14, 6:5-9; APPLE-1005, 6:40-47 (describing "signal generation means 12 performs control" based on signals detected by "position detection means" and received by "signal generation means 12"). In fact, use of a loop or event handler in a feedback control system were known and a conventional technique readily implemented by a POSITA in order to operate in accordance with the respective event. I note that, based on my knowledge and experience in the field, the use of a loop or event handler in a feedback control system were known to a POSITA. These were conventional techniques readily implemented by a POSITA in order to operate in accordance with the respective event. I note the '337 patent itself reflects the conventional nature of such programming techniques, which were used in place of timers, for example. APPLE-1001, 7:7-10 ("Rather than using a formal timer mechanism, certain implementations may simply employ counted loops or other simple programming techniques for periodically carrying out tasks.").

311. I further note that a POSITA recognized that it was conventional practice at the time to use one or a combination of an event handler, a loop, and a timer for implementing processes in program code. Conventional techniques of timers, loops, and event handlers generally allow program code to execute based on the existence of a certain event. A timer for example was a known technique to implement a process based on the expiration of an amount of time. An event handler for example was a known technique to implement a process based on an event state, variable value, user input, or other state. A loop was a known technique to implement a sequence of instructions that are continually repeated until a certain condition is reached. *See, e.g.*, APPLE-1026, 6-11.

312. In "step 712," the '337 patent's control program algorithm calls a "monitor" routine," which is illustrated in Figure 7B. APPLE-1001, 7:19-21. Here again, based on my knowledge and experience in the field, a POSITA would have recognized that the "monitor" routine is a simple and known routine for implementing a feedback loop to maintain operation of a vibration module at or near resonance. The combined system executes the same algorithm. *See* §XII.B (Gregorio-Ramsay-Wakuda-Rossi-Aldrich combination). In particular, a POSITA would have found it obvious, especially based on Aldrich's descriptions of feedback control to operate at a resonant frequency, to compare vibration

parameters while incrementing or decrementing the drive frequency, in accordance with Aldrich.

313. The combined system includes one or more sensors, as taught by Gregorio and Wakuda. APPLE-1004, 4:7-10, 4:42-48; APPLE-1005, 6:40-62 ("position detection means"). In particular, Gregorio describes detecting a back "electromagnetic field" (EMF) or the position of the mass, and then determining the "LRA vibration amplitude" "based on the derivative of the speed of the mass ("dv/dt") or the position. APPLE-1004, 4:7-10 ("sensing coil, Hall sensor, optical sensor or other type of sensing device that is located in proximity to mass"), 4:42-48. Further, Wakuda describe a closed-loop control to "generate a drive signal S1 tracking the resonance frequency of the movable body 6." APPLE-1005, 10:31-32. For example, Wakuda's "position detection means 11 detects that the movable body 6 has reached the neutral position ... that is, a middle point in the reciprocation stroke." *Id.*, 6:23-47. The detection signal of the middle point" is provided to the signal generation means 12, and "the signal generation means 12 performs control, such as switching of current direction of the drive signal S1." *Id.* Therefore, the software executed by the microprocessor in the combined system receives signals from the sensors, indicative of vibrational strength, and compares a current sensed vibration strength value and a previous sense vibration strength

value to tune the input frequency about a resonant frequency, consistent with steps 736-750 of Figure 7B of the ’337 patent. APPLE-1021, 1-3.

314. For example, in accordance with Aldrich’s suggestions, at a current time, the sensed vibration strength value at an incrementally increased control signal frequency is compared with a previous sensed vibration strength value. When the vibration strength has increased with increased frequency input, “then the direction of change . . . of frequency is accepted and another such change . . . is made during the following sampling period.” APPLE-1021, 2. To be clear, I note that this technique described by Aldrich is the same as steps 738-740 of the ’337 patent’s Figure 7B.

315. Similarly, when the vibration strength has not increased with increased frequency input, the control program determines that the resonant frequency has been exceeded. APPLE-1021, 2. As described by Aldrich, a POSITA would have recognized that when the vibration strength does not increase with increased output frequency, the frequency has moved away from a resonant peak. The “direction of change of frequency during the following sampling period is reversed,” such that the frequency is decremented, and the process continues. APPLE-1021, 2. Here again, I note that this technique described by Aldrich is the same as steps 742-744 of the ’337 patent.

316. The same process is applied when decrementing the output frequency, and thus carries out the same operations shown in Figure 7B at steps 746-752, for example.

317. As I discussed above, I note here again that, in the combined system, the currently and previously sensed sensor signals are processed and stored as integer values. Indeed, the use of integer values amounts to a known technique and a mere design choice (e.g., between integer or non-integer values). When implementing the linear resonant vibration module in accordance with Gregorio, Ramsay, Wakuda, Rossi, and Aldrich, a POSITA would have been motivated to utilize integer values when processing sensor signals. The sensor signals are typically converted to an integer value (by an analog-to-digital (A/D) converter), to facilitate digitally processing the signals, to ease data handling (integer values can be easier to handle digitally, including using hardware, than non-integer values), and to facilitate efficient computation and processing of the force values represented by the sensor signals. APPLE-1021, 2. A POSITA would have readily recognized the efficiency and effectiveness of utilizing an integer value (e.g., versus a decimal/fractional value). From my knowledge and experience in the field, a POSITA would have understood that typically, sensor values in digital systems are first represented and stored as integer values. From there, the values may optionally be converted to non-integer values (such as floats). A POSITA

would have thus would have been led to use integer values, reducing the need for additional conversion to non-integer values. Additionally, a POSITA would have viewed the use of integer values as a mere design choice between either integer values or non-integer values. As such, a POSITA would have found it obvious that the sensor signals are converted to an integer value, in order to digitally process the signals, and to facilitate efficient computation and processing of the force values represented by the sensor signals. APPLE-1021, 2-3.

318. In "step 714," the '337 patent's control program calls a "control" routine, which is illustrated in Figure 7C, "when the event corresponds to a change in the user input through the user interface." APPLE-1001, 7:21-24, 8:10-22. In the combined system, the user input provides a change in vibration strength (e.g., in accordance with Ramsay). Moreover, a POSITA would have recognized that the user input is received during a monitoring period so that the input is processed and implemented. When the user input is received, the software executing on the microprocessor outputs a corresponding control signal to the power supply in accordance with the user. For example, in the combined system, the software executed by the microprocessor receives user input adjusting the magnitude (e.g., height, frequency, etc.) of the waveform via a user interface, in accordance with Ramsay, thereby directing a change in vibration strength, and the control component changes the current provided from a power supply to the driving

component. APPLE-1006, [0022]-[0026], [0030]-[0033], [0046], [0053]-[0055]. Indeed, the current applied to the coil directly impacts the magnitude of the oscillations, implementing the user input directing a change in vibration strength. APPLE-1023, 9:65-10:3 ("The magnitude or strength of the force is dependent on the magnitude of the current that is applied to the coil."), 17:32-51 ("the gain 332 (or magnitude) of the force" and "gain of 100").

319. As such, the combined system includes the algorithm described with reference to Figure 7C of the '337 patent, according to the means-plus-function construction of "control component." In the combined system, the user input via the user interface provides a change in vibration strength. The user input is received from user input sensors so that the input is processed and implemented. In particular, the software executing on the microprocessor outputs a corresponding control signal to the power supply in accordance with the user unput. The process continues, such that the linear resonant vibration module operates according to the user input and feedback control loop (e.g., until further user input is detected).

320. Further, Ramsay describes that a user can customize characteristics of a haptic output including frequency of vibration. APPLE-1006, [0030]. The combined system's control component would receive user input through an "input/output device" (e.g., GUI) directing a change in vibration frequency.

APPLE-1006, [0030] ("frequency of vibration"); see also, [0033], [0035], [0039], [0051]. In response to such user input, the control component changes the frequency at which the control program changes the voltage state of the directional signal d. Indeed, in the combined system, the vibration frequency is controlled by the frequency at which the microprocessor changes the voltage state of the directional signal d output to the H-bridge switch circuit, and thus the frequency of the control signal is changed to implement the received user input. APPLE-1019, 7:34-36 ("A drive waveform that changes between positive and negative signs can be provided to the actuator to cause the oscillations."); APPLE-1037, 14:24-35 ("provide voltage or current in one of two directions"). As such, the combined system includes a control program having the algorithm described with reference to Figure 7C of the '337 patent, according to the means-plus-function construction of "control component."

321. In "step 718," the '337 patent's control program determines whether there has been a power down event. APPLE-1001, 7:24-28 ("[W]hen the event is a power-down event, as determined in step 718, resulting from deactivation of a power button by the user, then the control program appropriately powers down the device, in step 720, and the control program terminates in step 722."). Similar to the power on event described above, the combined system executes a power-down

event in response to user input (e.g., Gregorio-Ramsay-Wakuda's user-input features) that turns the device "off."

[1g] flux paths comprising a paramagnetic material that is shaped and positioned to reduce the reluctance of one or more magnetic circuits within the linear vibration module.

322. As I discussed in Ground 3A above, the Gregorio-Ramsay-Wakuda-Rossi-Aldrich combination renders obvious [1g], as taught by, for example, Gregorio-Ramsay-Wakuda and supporting evidence.

Claim 2

[2pre]-[2f]

323. Elements [2pre]-[2f] are the same as [1pre]-[1f]. Therefore, the discussion with respect to [1pre]-[1f] above, which explains that Gregorio-Ramsay-Wakuda-Rossi-Aldrich provides the same limitations in claim 1, is incorporated herein by reference. Further, as I discussed in Ground 3A above, the Gregorio-Ramsay-Wakuda-Rossi-Aldrich combination renders obvious [2pre]-[2e], as taught by, for example, Gregorio-Ramsay-Wakuda and supporting evidence.

[2g]

324. As discussed in §III.C, under the means-plus-function construction, the corresponding structure for "control component" in claim 2 is identical to the corresponding structure for "control component" in claims 1 and 4, except that the algorithm is further designed for the additional function of "driving simultaneous

oscillation of the moveable component at two or more frequencies to generate complex vibration modes." Such additional algorithm is described at column 13 of the '337 patent. APPLE-1001, 13:3-41.

325. As I discussed in [1f] above, the Gregorio-Ramsay-Wakuda-Rossi-Aldrich combination provides the additional algorithm for the "complex vibration modes." For example, the resulting system includes one or more alternative or complex modes of operation that systematically and/or periodically alter the frequency or produce various complex, multi-component vibrational modes. *See* Ground 4A ([1f]); APPLE-1006, [0035]-[0039], [0047], [0057]-[0059].

326. Additionally, the Gregorio-Ramsay-Wakuda-Rossi-Aldrich combination provides the other limitations of claim 2, as taught by Gregorio-Ramsay-Wakuda. *See* Ground 3A.

327. I am aware that, in the co-pending litigation, Patent Owner alleged the "control component" in claim 2 as a means-plus-function limitation and identified the corresponding structure as "microcontroller with internal or external memory; processor; CPU; microprocessor; and equivalents thereof" and "[if an algorithm is required] [w]here the corresponding structure is a processor, CPU, or microprocessor, the processor/CPU/microprocessor is programmed with an algorithm comprising the following steps: (a) set the mode and strength to values representing selections made by user input to the user input features; (b) provide a

corresponding output to the power supply so that the power supply provides a corresponding output to the driving component; and (c) drive simultaneous oscillation of the moveable component at two or more frequencies." APPLE-1046, 12-13. Based on my review, this means-plus-function interpretation is covered by this Petition's mapping based on the Gregorio-Ramsay-Wakuda-Rossi-Aldrich combination above because Patent Owner's interpretation is a broader version of the '337 patent's disclosed algorithm. *Supra*, §III.C. For example, the Gregorio-Ramsay-Wakuda-Rossi-Aldrich combination provides additional step (c) as taught by Gregorio-Ramsay-Wakuda, as shown in Ground 3A ([2g]). Further, the Gregorio-Ramsay-Wakuda-Rossi-Aldrich combination provides setting the mode and strength to values representing selections made by user input to the user input features, as taught by Gregorio-Ramsay-Wakuda as discussed above. Ground 4A ([1f]) and Ground 3A ([1f]).

Claim 4

[4pre]-[4e]

328. Elements [4pre]-[4e] are the same as [1pre]-[1e]. Therefore, the discussion with respect to [1pre]-[1e] above, which explains that Gregorio-Ramsay-Wakuda-Rossi-Aldrich discloses the same limitations in claim 1, is incorporated herein by reference. Further, as I discussed in Ground 3A above, the Gregorio-Ramsay-Wakuda-Rossi-Aldrich combination renders obvious [4pre]-

[4e], as taught by, for example, Gregorio-Ramsay-Wakuda and supporting evidence.

[4f] a control component that controls supply of power from the power supply to the driving component to cause the moveable component to oscillate at a frequency and an amplitude that are independently specified by user input received from the user-input features.

329. As noted above (§III.C), under the means-plus-function construction, the corresponding structure for "control component" in claim 4 is identical to the corresponding structure for "control component" in claim 1. Therefore, the same analysis of [1f] in Ground 4A applies here.

XIII. GROUND 4B: Gregorio-Ramsay-Tierling-Rossi-Aldrich Renders Obvious Claims 2, 3, and 4 (Both Parties' Means-Plus-Function Constructions)

330. Ground 4B is substantially the same as Ground 3B except for the means-plus-function construction discussed above in Ground 4A. Therefore, the discussion in Ground 3B is incorporated herein by reference.

331. The combination of Gregorio-Ramsay-Tierling-Rossi-Aldrich is substantially the same as the combination of Gregorio-Ramsay-Wakuda-Rossi-Aldrich except that Wakuda modifies the Gregorio-Ramsay system based on the implementation details disclosed in Wakuda (§X.B) and that Tierling modifies the Gregorio-Ramsay system based on Tierling's effect mapping functionalities (§XI.A). The modification of the underlying system (Gregorio or Gregorio-Ramsay) based on Rossi and Aldrich is the same or substantially similar between

the Gregorio-Ramsay-Wakuda-Rossi-Aldrich combination (Ground 4A) and the Gregorio-Ramsay-Tierling-Rossi-Aldrich (Ground 4B).

332. Additionally, under the means-plus-function construction, Gregorio-Ramsay-Tierling-Rossi-Aldrich provides the additional algorithm for "complex vibration modes" in claim 2, based on Tierling's teachings. Ground 3B ([2g]); APPLE-1008, [0108], [0031], Figures 9-10. Similarly, Gregorio-Ramsay-Tierling-Rossi-Aldrich covers Patent Owner's means-plus-function construction in claim 2 because Patent Owner's interpretation is a broader version of the '337 patent's disclosed algorithm. §III.C; Ground 4A ([2f]-[2g]). For example, the Gregorio-Ramsay-Tierling-Rossi-Aldrich combination provides additional step (c) as taught by Gregorio-Ramsay-Tierling, as shown in Ground 3B ([2g]). Further, the Gregorio-Ramsay-Tierling-Rossi-Aldrich combination provides setting the mode and strength to values representing selections made by user input to the user input features, as taught by Gregorio-Ramsay-Tierling as discussed above. Ground 3B ([2f]).

XIV. CONCLUSION

333. The findings and opinions set forth in this declaration are based on my work and examinations to date.

334. I may continue my examinations. I may also receive additional documentation and other factual evidence over the course of this IPR that will

allow me to supplement and/or refine my opinions. I reserve the right to add to, alter, or delete my opinions and my declaration upon discovery of any additional information. I reserve the right to make such changes as may be deemed necessary.

335. In signing this declaration, I recognize that the declaration will be filed as evidence in an IPR before the PTAB. I also recognize that I may be subject to cross-examination in the case and that cross-examination will take place within the United States. If cross-examination is required of me, I will appear for cross-examination within the United States during the time allotted for cross-examination.

APPENDIX A

Curriculum Vitae

Blake Hannaford, Ph.D.

April 2, 2024
5634 12th Ave NE, Seattle, WA 98105
phone: +1-206-412-0182 email: blake.hannaford@gmail.com

Educational History

Ph.D. University of California, Berkeley 12/85, Electrical Engineering and Computer Science
Thesis Title: The control of fast human movement: horizontal head rotation M.S. University of California, Berkeley 12/82 Electrical Engineering and Computer Science Thesis Title: Adaptive Linear Prediction of Cardiac Marker Locations
B.S. Yale University 5/77, Engineering and Applied Science (Electrical Engineering)

Employment History

University of Washington (currently on 100% leave) 9/89 -

Department of Electrical and Computer Engineering
Professor, Adjunct Professor of Bioengineering, Adjunct Professor of Mechanical Engineering Adjunct Professor of Surgery: 9/02 - present
0% Core faculty, DxArts center, College of Arts and Sciences.
Professor, Adjunct Professor of Bioengineering, Adjunct Professor of Surgery: 9/98 - 9/02
Associate Professor: 9/93- 8/98
Assistant Professor: 9/89 - 9/93.
Teach courses in embedded computing, control, robotics, and conduct sponsored research in areas of haptic interfaces, and surgical telerobotics.

Meta Reality Labs Research, Redmond Wa (100% time)

3/22 - 4/23
Led a group of 5 research scientists on haptics including electroactive polymer actuators for haptics. Served as a subject matter expert on haptic devices, systems, and perception. Responsible for wristband haptics technology.

Google-X, (now Verily Inc), Mountain View, Ca. (80%)

4/14 - 12/15
Defined and evaluated joint venture between Google Life Sciences (Verily) and Johnson & Johnson Ethicon division in surgical robotics. Joint venture is now launched as Verb Surgical. Developed advanced prototypes including real-time software and hardware design.

Jet Propulsion Laboratory, Caltech 9/88-8/89

Automation and Robotics Section (347)
Supervisor of the group in Man-Machine Systems and Human Factors. Responsible for technical guidance, management, planning and budgeting for a group of 10 (4 Ph.D., 3 B.S., 3 part time). Annual budget $1.4 M (Funding Source: NASA Code R).

Jet Propulsion Laboratory,Caltech 4/86-9/88

Applied Robotics and Teleoperators Group
Member of Technical Staff: Conducted research and technology development under Dr. Antal Bejczy. Studied the interaction between human operator and advanced telerobotic control devices.

Rush Medical Center, Chicago, IL 10/79 - 8/80

Electronics Engineer. Design, systems integration, programming and construction of a prototype automated red blood cell analyzer. Supervisor: J.W. Bacus, Ph.D.

First Chicago Corporation, Chicago Il. 2/79 - 10/79

Systems Analyst. Advanced Technology Analysis Unit, Corporate Information Systems Planning Division. Analysis, development and programming of a prototype electronic mail system.

Compuserve Inc. 6/77 - 5/78

Computer Engineer: Computer hardware and software design, circuit-switched network software design engineering.

Awards and Honors

- Life Fellow, IEEE, January 2021.
- UW Career Center @ Engineering FACET award for career mentoring of students (student nominated) May 2019.
- Finalist for Best Symposium Paper Award, International Symposium on Medical Robotics, Atlanta, April 2019 (Paper presented by Ph.D. student Yu Hsuan Su).
- Amazon Catalyst Fellow, March 2017
- Nominated for University of Washington Outstanding Teaching Award, March 2014.
- Nominated for EE Department Outstanding Teaching Award, May 2013.
- Nominated for University of Washington Outstanding Teaching Award, March 2012.
- Nominated for EE Department Outstanding Teaching Award, May 2011.
- UW Electrical Engineering Dept. Outstanding Research Advisor Award, May 2010.
- EDGE surgical skills evaluation device, a commercial product licensed from the UW Biorobotics Lab was selected as one of 8 winnners of the 2008 Innovation of the year by the Society of Laparoscopic Surgeons, (Medical Device & Diagnostic Industry Magazine, Dec 2008).
- IEEE Fellow for "contributions to haptic interfaces and telerobotic systems." January, 2006.
- One of Five UWEE Professors who received votes in the UW Alumni Association "Favorite Professor" poll of 2005 Graduates.
- Faculty Service Award, Department of Electrical Engineering, June 2005, "In recognition for excellent service to the department and the community through work in Faculty Recruiting, Educational Administration, and Curriculum Development."

- "The Blue Dragon, a System for Measuring the Kinematics and the Dynamics of Minimally Invasive Surgical Tools In Vivo," one of 10 finalists for Wegbreit Best Manipulation Paper Award from among 700 papers presented at IEEE International Conference on Robotics and Automation, Arlington VA, May 2002.
- "Dual Stable Point Model of Muscle Activation and Deactivation," by Ching-Ping Chou and Blake Hannaford, re-printed in "ONR-Investing in the Future, 1946-1996," a commemorative volume published on the 50th anniversary of the Office of Naval Research.
- Elected Region 6 Representative IEEE Engineering in Medicine and Biology Society Administrative Committee, 10/96.
- "Early Career Achievement Award": IEEE Engineering in Medicine and Biology Society, November, 1991
- NASA Group Achievement Award: "The Telerobotics Design Team", May 1991
- National Science Foundation Presidential Young Investigator Award, 9/90-9/95
- National Institutes of Health Training Grant in Systems and Integrative Biology, 6/81-6/84.

Awards and Honors won by Students

- June 2021, ECE474 top project award to the Booz Allen Hamilton Team, "Human-Powered Submarine Autopilot" project. Students: Chase Deitner, James Lee, Miller Sakmar, and Peter Tsanev. ECE faculty adviser: Blake Hannaford. UW-APL advisers: Cassandra Riel and Benjamin Maurer. Booz Allen Hamilton advisers: Eric Jones, Joe Reck, Nick Valladarez, and Ryan Edwards. Naval Undersea Warfare Center, Division Keyport advisers: Cooper Bowen and Jacob Yakawich.
- July 2019, Timothy Kowalewski, Assistant Professor, U. Minnesota, NSF CAREER award.
- January 2012, Andrew Hill, Mary Gates Undergraduate Research Award.
- April 2010, Sina Nia Kosari, NSERC Ph.D. fellowship (Canadian equivalent of NSF Graduate Fellowship)
- March 2010, Timothy Kowalewski, Best Ph.D. Project Proposal Award, (from 10 candidates presented) NSF-Sponsored American College of Surgeons Ph.D. Consurtium, Chicago Illinois.
- March 2009, Brittany Redmond, Mary Gates Undergraduate Research Award.
- June 2007, Mitch Lum. Oustanding Graduate Research Assistant, Department of Electrical Engineering, University of Washington.
- June 2007, Mitch Lum. Spirint of Community Award, Department of Electrical Engineering, University of Washington.
- June 2007, Gina Donlin, Oustanding Undergraduate Research Assistant, Department of Electrical Engineering, University of Washington.
- January 2007, Mitch Lum et al., One of 10 winners of Best Poster Awards, Medicine Meets Virtual Reality, Long Beach, CA 2007.
- January 2006, Ken Fodero et al., One of 10 winners of Best Poster Awards, Medicine Meets Virtual Reality, Long Beach, CA 2006.
- August 2005, William "Pete" Moss (DxARTS) and Brian Cunitz (EE) won honorable mention for their project "The Haptic Theremin," in the Sensable Developers Challenge announced at Siggraph 2005.

- June 2005, Steven Venema (Ph.D. 1997) promoted to Boeing Associate Technical Fellow.
- March 2002, Ryland Bryant, ME, Volker Schmirgel, EE, Daniel Villa, EE, Bruno Sbinden, ME, Dick Kriesberg, EE, First Place, Lunar Construction Robotics Competition, ASCE Aerospace Division.

Affiliations

Adjunct Professor of Surgery. Adjunct Professor of Bioengineering. Adjunct Professor of Mechanical Engineering. 0% Core Faculty UW Digital Arts Program (DXARTS).
Affiliated Researcher, Intel Research Lab, Seattle. (2000-2010)
Visiting Professor, Department of Surgical Technology, Imperial College, London

Publications since 1995

Refereed Archival Journal Publications

[1] KR Walley and M Grover and GL Raff and JW Benge and B Hannaford and SA Glantz. Left ventricular Dynamic Geometry in the Intact and Open Chest Dog *Circulation Research* (50) 1982

[2] B. Hannaford and M.H. Nam and V. Lakshminarayanan and L. Stark. Electromyographic Evidence of Neurological Controller Signal with Viscous Load *Journal of Motor Behavior* (16) 1984

[3] B. Hannaford and G. Cheron and L. Stark. The Effects of Applied Vibration on the Tri-Phasic EMG Pattern in Neurologically Ballistic Head Movements *Experimental Neurology* (88) 1985

[4] B. Hannaford and S.A. Glantz. Adaptive linear predictor tracks implanted radiopaque markers *IEEE Trans. Biomedical Engineering* (BME-32) 1985

[5] B. Hannaford and C.C. Krischer and L. Stark. A Device for Zero Eye Movement Reading *IEEE Trans. Biomedical Engineering* (BME-32) 1985

[6] B. Hannaford and L. Stark. Roles of the elements of the Tri-Phasic Control Signal *Experimental Neurology* (90) 1985

[7] D.S. Holder and W.S. Kim and B. Hannaford and L. Stark. Simulation of The Human Eyeblink using the EMG of Eyelid Musculature as Input *Muscle and Nerve* (In Press) 1985

[8] N. Akamatsu and B. Hannaford and L. Stark. An Intrinsic Mechanism for the oscillatory contraction of muscle *Biological Cybernetics* (53) 1986

[9] B. Hannaford and W.S. Kim and S.H. Lee and L. Stark. Neurological Control of Head Movements: Inverse Modeling and Electromyographic Evidence *Math. BioScience* (78) 1986

[10] B. Hannaford and S. Lehman. Short Time Fourier Analysis of the Electromyogram: Fast Movements and Constant Contraction *IEEE Transactions on Biomedical Engineering* (BME-33) 1986

[11] B.J. Martin and B. Hannaford and L. Stark. Effets Des Vibrations Musculaires Previsibles ou Imprevisibles sur les Mouvements Balistiques de la Tete *Journal de Biomechanique* (10) 1986

[12] L. Stark and B. Hannaford and C.F. Ramos. Interaction of Descending Control and Stretch Reflex in Fast Voluntary Movements in Man *Society for Neuroscience Abstract* 1986

[13] B. Hannaford and L. Stark. Late Agonist Burst (PC) Required for Optimal Head Movement: a Simulation Study *Biological Cybernetics* (57) 1987

[14] D.S. Holder and A. Scott and B. Hannaford and L. Stark. High Resolution Electromyogram of the Human Eyeblink *Electromyogr. and Clinical Neurophys.* (27) 1987

[15] W.S. Kim and S.R. Ellis and M. E. Tyler and B. Hannaford and L. Stark. Quantitative Evaluation of Perspective and Stereoscopic Displays in Three Axis Manual Tracking Tasks *IEEE Trans. Systems Man & Cybernetics* (SMC-17) 1987

[16] L. Stark and W.S. Kim and F. Tendick and B. Hannaford and S. Ellis. Telerobotics; Display, Control, and Communication Problems *IEEE Journal of Robotics and Automation* (RA-3) 1987

[17] N. Akamatsu and B. Hannaford and L. Stark. An Intrinsic Mechanism for the Oscillatory Contraction of Muscle *Proc IEEE Intl Conf on Engineering in Med. & Biol* 1989

[18] B. Hannaford. A Design Framework for Teleoperators with Kinesthetic Feedback *IEEE Transactions on Robotics and Automation* (5) 1989

[19] M.H. Nam and B. Hannaford and L. Stark. Cross Talk, Muscle Synergy, and Electrode Locations and Their Effects on Electromyographic Activity in Neck Muscles *Innov. and Techn. in Biol. and Medicine* (10) 1989

[20] B. Hannaford. A Non-linear Model of the Phasic Dynamics of Muscle Activation *IEEE Trans. Biomedical Engineering* (37) 1990

[21] B. Hannaford and P. Lee. Hidden Markov Model of Force Torque Information in Telemanipulation *International Journal of Robotics Research* (10) 1991

[22] B. Hannaford and L. Wood and D. McAffee and H. Zak. Performance Evaluation of a Six Axis Generalized Force Reflecting Teleoperator *IEEE Transactions on Systems, Man, and Cybernetics* (21) 1991

[23] C.P. Chou and B. Hannaford. Dual Stable Point Model of Muscle Activation and Deactivation *Biological Cybernetics* (66) 1992

[24] W.S. Kim and B. Hannaford and A.K. Bejczy. Force-Reflection and Shared Compliant Control in Operating Telemanipulators with Time Delay *IEEE Transactions on Robotics & Automation* (8) 1992

[25] B. Hannaford. Resolution-First Scanning of Multi-Dimensional Spaces *CVGIP: Graphical Models and Image Processing* (55) 1993

[26] P. Buttolo and P. Braathen and B. Hannaford. Sliding Control of Force Reflecting Teleoperation: Preliminary Studies *PRESENCE* (3) 1994

[27] P. Loughlin and J. Pitton and B. Hannaford. Approximating Time-Frequency Density Functions via Optimal Combinations of Spectrograms *IEEE Signal Processing Letters* (1) 1994

[28] M. Shoemaker and B. Hannaford. A Study and Model of the Role of the Renshaw Cell in Regulating the Transient Firing Rate of the Motoneuron *Biological Cybernetics* (71) 1994

[29] W.C. Wang and M. Afromowitz and B. Hannaford. Technique for Mechanical Measurements Using Optical Scattering From a Micro-Pipette *IEEE Transactions on Biomedical Engineering* (41) 1994

[30] B. Hannaford and K. Kuhn. A "Hands-On" Course in Consumer Electronics Design *International Journal of Mechatronics: Special Issue on Mechatronics Education* (5) 1995

[31] B. Hannaford and J.M. Winters and C.P. Chou and P.H. Marbot. The Anthroform Arm: A System for the Study of Spinal Circuits *Annals of Biomedical Engineering: L. Stark Special Issue* (23) 1995

[32] C.P. Chou and B. Hannaford. Measurement and Modeling of McKibben Pneumatic Artificial Muscles *IEEE Transactions on Robotics and Automation* (12) 1996

[33] B. Hannaford and P.H. Marbot and P. Buttolo and M. Moreyra and S. Venema. Scaling Properties of Direct Drive Serial Arms *International Journal of Robotics Research* (15) 1996

[34] P. Bhatti and B. Hannaford. Single Chip Optical Encoder Based Velocity Measurement System *IEEE Transactions on Control Systems Technology* (5) 1997

[35] P. Buttolo and R. Oboe and B. Hannaford. Architectures for Shared Haptic Virtual Environments *Computers and Graphics* (21) 1997

[36] C.P. Chou and B. Hannaford. Study of Human Forearm Posture Maintenance with a Physiologically Based Robotic Arm and Spinal Level Neural Controller *Biological Cybernetics* (76) 1997

[37] N.E. Greivell and B. Hannaford. The Design of a Ferrofluid Magnetic Pipette *IEEE Transactions on Biomedical Engineering* (44) 1997

[38] F. Boe and B. Hannaford. On-line Improvement of Speed and Tracking Performance on Repetetive Paths *IEEE Transactions on Control Systems Technology* (6) 1998

[39] D.Y. Hwang and B. Hannaford. Teleoperation Performance with a Kinematically Redundant Slave Robot *International Journal of Robotics Research* (17) 1998

[40] R. J. Adams and B. Hannaford. Stable Haptic Interaction with Virtual Environments *IEEE Transactions on Robotics and Automation* (15(3)) 1999

[41] G.K. Klute and J.M. Czerniecki and B. Hannaford. McKibben Artificial Muscles: Pneumatic Actuators with Biomechanical Intelligence *IEEE/ASME 1999 Intl. Conf. on Advanced Intelligent Mechatronics* 1999

[42] M. MacFarlane and J. Rosen and B. Hannaford and C. Pellegrini and M. Sinanan. Force Feedback Grasper Helps Restore the Sense of Touch in Minimally Invasive Surgery. *Journal of Gastrointestinal Surgery* (3) 1999

[43] J. Rosen and B. Hannaford and M. MacFarlane and M. Sinanan. Force Controlled and Teleoperated Endoscopic Grasper for Minimally Invasive Surgery - Experimental Performance Evaluation *IEEE Transactions on Biomedical Engineering* (46) 1999

[44] R. Adams and D. Klowden and B. Hannaford. Stable Haptic Interaction Using the Excalibur Force Display *IEEE Intl. Conf. on Robotics and Automation* 2000

[45] G.K. Klute and B. Hannaford. Accounting for Elastic Energy Storage in McKibben Artificial Muscle Actuators *ASME Journal of Dynamic Systems, Measurements, and Control* (122) 2000

[46] C. Richards and J. Rosen and B. Hannaford and M. MacFarlane and C. Pellegrini and M. Sinanan. Skills Evaluation in Minimally Invasive Surgery Using Force/Torque Signatures *Surgical Endoscopy* (14) 2000

[47] J. Rosen and C. Richards and B. Hannaford and M. Sinanan. Hidden markov Models of Minimally Invasive Surgery *Studies in Health Technology and Informatics - Medicine Meets Virtual Reality* (70) 2000

[48] J. Rosen and M. Solazzo and B. Hannaford and M. Sinanan. Objective Evaluation of Laparoscopic Surgical Skills Using Hidden Markov Models Based on Haptic Information and Tool/Tissue Interactions *American College of Surgeons Annual Meeting - Washington State Chapter* 2000

[49] S.C. Venema and B. Hannaford. Experiments in Fingertip Perception of Surface Discontinuities *Intl. Journal of Robotics Research* (19) 2000

[50] R. Adams and D. Klowden and B. Hannaford. Virtual Training for a Manual Assembly Task *Haptics-e, the electronic journal of haptics research* (2) 2001

[51] Longnion J. and J. Rosen and M. Sinanan and B. Hannaford. Effects of Geared Motor Characteristics on Tactile Perception of Tissue Stiffness *Studies in Health Technology and Informatics - Medicine Meets Virtual Reality* (81) 2001

[52] J. Rosen and B. Hannaford and C. Richards and M. Sinanan. Markov Modeling of Minimally Invasive Surgery Based on Tool/Tissue Interaction and Force/Torque Signatures for Evaluating Surgical Skills *IEEE Transactions on Biomedical Engineering* (48) 2001

[53] J. Rosen and M. Solazzo and B. Hannaford and M. Sinanan. Objective Laparoscopic Skills Assessments of Surgical Residents Using HiddenMarkov Models Based on Haptic Information and Tool/Tissue Interactions *Studies in Health Technology and Informatics - Medicine Meets Virtual Reality* (81) 2001

[54] S. Venema and B. Hannaford. A Probabilistic Representation of Human Workspace for Use in the Design of Human Interface Mechanisms *IEEE Trans. Mechatronics* (6) 2001

[55] R. Adams and B. Hannaford. Control Law Design for Haptic Interfaces to Virtual Reality *IEEE Trans. Control Systems Technology* (10) 2002

[56] J.D. Brown and J. Rosen and M. Moreyra and M. Sinanan and B. Hannaford. Computer-Controlled Motorized Endoscopic Grasper for In Vivo Measurements of Soft Tissue Biomechanical Characteristics *Studies in Health Technology and Informatics - Medicine Meets Virtual Reality* (85) 2002

[57] B. Hannaford and J.H. Ryu. Time Domain Passivity Control of Haptic Interfaces *IEEE Transactions on Robotics and Automation* (18) 2002

[58] K. Jaax and B. Hannaford. A Biorobotic Structural Model of the Mammalian Muscle Spindle Primary Afferent Response *Annals of Biomedical Engineering* (30) 2002

[59] G Klute and J.M. Czerniecki and B. Hannaford. Artificial Muscles: Actuators for Biorobotic Systems *Intl. Journal of Robotics Research* (21) 2002

[60] J. Rosen and J.D. Brown and M. Barreca and L. Chang and B. Hannaford and M. Sinanan. The Blue DRAGON - A system for Monitoring the Kinematics and Dynamics of Endoscopic Tools in Minimally Invasive Surgery for Objective Laparoscopic Skill Assessment *Studies in Health Technology and Informatics - Medicine Meets VirtualReality* (85) 2002

[61] J. Rosen and M. Solazzo and B. Hannaford and M. Sinanan. Task Decomposition of Laparoscopic Surgery for Objective Evaluation of Surgical Residents' Learning Curve Using Hidden Markov Model *Computer Aided Surgery* (7) 2002

[62] Brown and J. Rosen and M. N. Sinanan and B. Hannaford. In-Vivo and Postmortem Compressive Properties of Porcine Abdominal Organs *Lecture Notes in Computer Science, Medical Image Computing and Computer-Assisted Intervention - MICCAI 2003* (2878) 2003

[63] J. D. Brown and J. Rosen and Y. S. Kim and L. Chang and M. Sinanan and B. Hannaford. In-Vivo and In-Situ Compressive Properties of Porcine Abdominal Soft Tissues *Studies in Health Technology and Informatics - Medicine Meets Virtual Reality* (94) 2003

[64] J. Rosen and L. Chang and J. D. Brown and B. Hannaford and M. Sinanan and R. Satava. Minimally Invasive Surgery Task Decomposition - Etymology of EndoscopicSuturing *Studies in Health Technology and Informatics - Medicine Meets Virtual Reality* (94) 2003

[65] Jee-Hwan Ryu and Yoon Sang Kim and Blake Hannaford. Sampled and Continuous Time Passivity and Stability of Virtual Environments *IEEE Int. Conf. on Robotics & Automation 2003* 2003

[66] J.D. Brown and J. Rosen and L. Chang and M. Sinanan and B. Hannaford. Quantifying Surgeon Grasping Mechanics in Laparoscopy Using the Blue DRAGON System *Studies in Health Technology and Informatics - Medicine Meets Virtual Reality 13* 2004

[67] Jee-Hwan Ryu and Dong-Soo Kwon and Blake Hannaford. Control of a Flexible Manipulator with Noncollocated Feedback: Time Domain Passivity Approach *IEEE Trans. on Robotics* (20) 2004

[68] Jee-Hwan Ryu and Dong-Soo Kwon and Blake Hannaford. Stability Guaranteed Control: Time Domain Passivity Approach *IEEE Trans. on Control Systems Technology* (12) 2004

[69] Jee-Hwan Ryu and Dong-Soo Kwon and Blake Hannaford. Stable Teleoperation with Time Domain Passivity Control *IEEE Trans. on Robotics and Automation* (20) 2004

[70] J.E. Speich and J. Rosen. Medical Robotics *In Encyclopedia of Biomaterials and Biomedical Engineering* 2004

[71] Jee-Hwan Ryu and Yoon Sang Kim and Blake Hannaford. Sampled and Continuous Time Passivity and Stability of Virtual Environments *IEEE Trans. on Robotics and Automation* (20) 2004

[72] J. Dosher and B. Hannaford. Human Interaction with Small Haptic Effects *PRESENCE* (14) 2005

[73] D.P. Ferris and J.M. Czerniecki and B. Hannaford. An ankle-foot orthosis powered by artificial pneumatic muscles *Journal of Applied Biomechanics* (21) 2005

[74] R. Leuschke and EKT Kurihara and J. Dosher and B. Hannaford. High fidelity multi finger haptic display *Haptic Interfaces for Virtual Environment and Teleoperator Systems, 2005. WHC 2005. First Joint Eurohaptics Conference and Symposium on* 2005

[75] J. Rosen and M. Lum and D. Trimble and B. Hannaford and M. Sinanan. Spherical Mechanism Analysis of a Surgical Robot for Minimally Invasive Surgery - Analytical and Experimental Approaches *Studies in Health Technology and Informatics - Medicine Meets Virtual Reality, (MMVR05)* (111) 2005

[76] M.J.H. Lum and J. Rosen and M. N. Sinanan and B. Hannaford. Kinematic Optimization of Serial and Parallel Spherical Mechanism for a Minimally Invasive Surgical Robot *IEEE Transactions on Biomedical Engineering* (53) 2006

[77] J. Rosen and J.D. Brown and L. Chang and M. Sinanan and B. Hannaford. Generalized Approach for Modeling Minimally Invasive Surgery as a Stochastic Process Using a Discrete Markov Model *IEEE Transactions on Biomedical Engineering* (53) 2006

[78] J. Rosen and B. Hannaford. Doc at a Distance *IEEE Spectrum* 2006

[79] S. De and J. Rosen and A. Dagan and P. Swanson and M. Sinanan and B. Hannaford. Tissue Damage due to Mechanical Stresses as applied during Minimally Invasive Surgery *International Journal of Robotics Research* (26) 2007

[80] M.H. Lum and D.C.W. Friedman and H.H. King and T. Broderick and M.N. Sinanan and J. Rosen and B. Hannaford. Field Operation of a Surgical Robot via Airborne Wireless Radio Link *IEEE Int. Conf. on Field and Service Robotics* 2007

[81] J. Rosen and J. Brown and S. De and M. Sinanan and B. Hannnaford. Biomechanical Properties of Abdominal Organs In Vivo and Postmortem Under Compression Loads *J. Biomechancal Engineering* (130) 2008

[82] M. Lum and D. Friedman and J. Rosen and Ganesh Sankaranarayanan and H. King and K. Fodero and R. Leuschke and M. Sinanan and B. Hannaford. The RAVEN - Design and Validation of a Telesurgery System *International Journal of Robotics Research* (28) 2009

[83] D.W. Friedman and T. Kowalewski and R. Jovanovic and J. Rosen and B. Hannaford. Freeing the Serial Mechanism Designer from Inverse Kinematic Solvability Constraints *Applied Bionics and Biomechanics* (7) 2010

[84] P. Roan and A.S. Wright and M. N. Sinanan and B. Hannaford. An Instrumented Minimally Invasive Surgical Tool: Design and Calibration *Applied Bionics and Biomechanics* (Special Issue on Surgical Robotics) 2010

[85] R. Bly and D. Su and B. Hannaford and M. Ferreira and K. Moe. Computer Modeled Multiportal Approaches to the Skull Based *Journal of Neurosurgery Part B: Skull Base* (73) 2012

[86] Diana CW Friedman and T. Lendvay and B. Hannaford. Instrument Failures for the da Vinci Surgical System: a Food and Drug Administration MAUDE Database Study *Surgical Endoscopy* (27) 2012

[87] Edvard Naerum and Ole Jakob Elle and Blake Hannaford. The Effect of Interaction Force Estimation on Performance in Bilateral Teleoperation *IEEE Transactions on Haptics* (5) 2012

[88] Timothy J. Tausch and Timothy M. Kowalewski and Lee W. White and Patrick S. McDonough and Timothy C. Brand and Thomas S. Lendvay. Content and Construct Validation of a Robotic Surgery Curriculum Using an Electromagnetic Instrument Tracker *The Journal of Urology* (188) 2012

[89] Randall A. Bly and David Su and Thomas S. Lendvay and Diana Friedman and Blake Hannaford and Manuel Ferreira and Kris S. Moe. Multiportal Robotic Access to the Anterior Cranial Fossa: A Surgical and Engineering Feasibility Study *Otolaryngology–Head and Neck Surgery* (149) 2013

[90] B. Hannaford and J. Rosen and Diana CW Friedman and H. King and P. Roan and L. Cheng and D. Glozman and J. Ma and S.N. Kosari and L. White. Raven-II: AN Open Platform for Surgical Robotics Research *IEEE Transactions on Biomedical Engineering* (60) 2013

[91] Lee White and Randall Bly and Daniella D'Auria and Nava Aghdasi and Paul Bartell and Lei Cheng and Blake Hannaford. Cricothyrotomy simulator with computational skill assessment for procedural skill training in the developing world *Otolaryngology–Head and Neck Surgery* (149) 2013

[92] W. Jong Yoon and C.A. Velasquez and L. White and B. Hannaford and Y.S. Kim and T.S. Lendvay. Preliminary Articulable Probe Designs With RAVEN and Challenges: Image-Guided Robotic Surgery Multitool System *ASME Journal of Medical Devices* (8) 2013

[93] D. Glassman and L. White and A. Lewis ˆA H. King and A. Clarke and T. Glassman and B. Comstock and B. Hannaford and T. Brand and T. Lendvay. MP37-05 The Da Vinci Robot Training Dilemma: Evaluating The Raven Robot As A Solution *Journal of Urology* (191) 2014

[94] D. Glassman and L. White and A. Lewis and H. King and A. Clark and T. Glassman and B. Comstock and B. Hannaford and T.S. Lendvay. Raven Surgical Robot Training in Preparation for da Vinci® Use: A Randomized Prospective Trial *Studies in Health Technology and Informatics, NextMed/MMVR21* (196) 2014

[95] Y Gong and D. Hu and B. Hannaford and E. Seibel. Accurate three-dimensional virtual reconstruction of surgical field using calibrated trajectories of an image-guided medical robot *Journal of Medical Imaging* (1) 2014

[96] T. Kowalewski and L. White and T.S. LEndvay and I. Jiang and R. Sweet and A. Wright and B. Hannaford and M. Sinanan. Beyond task time: automated measurement augments fundamentals of laparoscopic skills methodology *Journal of Surgical Research* (192) 2014

[97] L. White and T. Kowalewski and R. Dockter and B. Comstock and B. Hannaford and T. Lendvay. Crowd-Sourced Assessment of Technical Skill (C-SATS): A Valid Method for Discriminating Basic Robotic Surgery Skills *Journal of Endourology* 2014

[98] Nava Aghdasi and Yangming Li and Angelique Berens and Kristen Moe and Randall A. Bly and B. Hannaford. Atlas and feature based 3D pathway visualization enhancement for skull base pre-operative fast planning from head CT *Medical Imaging 2015: Image-Guided Procedures, Robotic Interventions, and Modeling,* (9415) 2015

[99] Nava Aghdasi and Randall Bly and Lee White and Blake Hannaford and Kris Moe and Thomas Lendvay. Crowd-sourced assessment of surgical skills in cricothyrotomy procedure *Journal of Surgical Research* (196) 2015

[100] Lei Cheng and Blake Hannaford. Finite Element Analysis for evaluating liver tissue damage due to mechanical compression *Journal of biomechanics* (48) 2015

[101] Uikyum Kim and Dong-Hyuk Lee and Woon Jong Yoon and Blake Hannaford and Hyouk Ryeol Choi. Force Sensor Integrated Surgical Forceps for Minimally Invasive Robotic Surgery *Robotics, IEEE Transactions on* (31) 2015

[102] Muneaki Miyasaka and Joseph Matheson and Andrew Lewis and Blake Hannaford. Measurement of the Cable-Pulley Coulomb and Viscous Friction for a Cable-Driven Surgical Robotic System *IROS 2015* 2015

[103] Timothy Brown and Patrick Moore and Jeffrey Herron and Margaret Thompson and Tamara Bonaci and Sara Goering and Howard Jay Chizeck. Personal Responsibility in the Age of User-Controlled Neuroprosthetics *Proceedings of the 2016 IEEE International Symposium on Ethics in Engineering, Science and Technology (IEEE ETHICS)* 2016

[104] L. Cheng and B. Hannaford. Evaluation of liver tissue damage and grasp stability using finite element analysis *Computer methods in biomechanics and biomedical engineering* (19) 2016

[105] Dong-Hyuk Lee and Kim Uikyum and Tauseef Gulrez and Woon Jong Yoon and Blake Hannaford and Hyouk Ryeol Choi. A laparoscopic grasping tool with force sensing capability *IEEE/ASME Transactions On Mechatronics* (21) 2016

[106] Richard Harbison and Angelique Berens and Anthony Law and Mark Whipple and Blake Hannaford and Kris Moe. Objective Signatures of Endoscopic Surgical Performance *Journal of Neurological Surgery Part B: Skull Base* (77) 2016

[107] Yangming Li and R Alex Harbison and Randall Bly and Ian Humphreys and Hannaford Blake and Kris Moe. Atlas Based Anatomical Region Segmentation for Minimally Invasive Skull Base Surgery Objective Motion Analysis *Journal of Neurological Surgery Part B: Skull Base* (78) 2016

[108] V.J. Dzau and D.A. Asch and B. Hannaford and R. Aggarwal and C.M. Pugh. Debate on the cost of innovation in healthcare: is it too costly? *BMJ Simulation and Techology Enhanced Learning* (3) 2017

[109] Mohammad Haghighipanah and Muneaki Miyasaka and Blake Hannaford. Utilizing Elasticity of Cable Driven Surgical Robot to Estimate Cable Tension and External Force *IEEE Robotics And Automation Letters.* (2) 2017

[110] R Alex Harbison and Yangming Li and Angelique M Berens and Randall A Bly and Blake Hannaford and Kris S Moe. An automated methodology for assessing anatomy-specific instrument motion during endoscopic endonasal skull base surgery *Journal of Neurological Surgery Part B: Skull Base* (38) 2017

[111] A. Aghdasi and M. Whipple and I. Humphreys and K. Moe and B. Hannaford and R. Bly. Automated Surgical Approach Planning for Complex Skull Base Targets: Development and Validation of a Cost Function and Semantic Atlas *Surgical innovation* 2018

[112] Danying Hu and Yuanzheng Gong and Eric J Seibel and Laligam N Sekhar and Blake Hannaford. Semi-autonomous image-guided brain tumour resection using an integrated robotic system: A bench-top study *The International Journal of Medical Robotics and Computer Assisted Surgery* (14) 2018

[113] Yangming Li and Shuai Li and Blake Hannaford. A model-based recurrent neural network with randomness for efficient control with applications *IEEE transactions on industrial informatics* (15) 2018

[114] Yangming Li and Blake Hannaford and Jacob Rosen. The Raven Open Surgical Robotic Platforms: A Review and Prospect *Acta Polytechnica Hungarica* (16) 2019

[115] Rajeev C Saxena and Seth Friedman and Randall A Bly and Jeffrey Otjen and Adam M Alessio and Yangming Li and Blake Hannaford and Mark Whipple and Kris S Moe. Comparison of micro–computed tomography and clinical computed tomography protocols for visualization of nasal cartilage before surgical planning for rhinoplasty *JAMA facial plastic surgery* (21) 2019

[116] Carlos A Velasquez and Yoon Sang Kim and Thomas S Lendvay and Blake Hannaford and W Jong Yoon. RAVEN eyes around the instrument from modular axis sharing *International Journal of Control, Automation and Systems* (17) 2019

[117] Dianmu Zhang and Blake Hannaford. IKBT: solving symbolic inverse kinematics with behavior tree *Journal of Artificial Intelligence Research* (65) 2019

[118] Sekhar, Laligam N and Juric-Sekhar, Gordana and Qazi, Zeeshan and Patel, Anoop and McGrath Jr, Lynn B and Pridgeon, James and Kalavakonda, Niveditha and Hannaford, Blake. The future of skull base surgery: a view through tinted glasses *World Neurosurgery* (142) 2020

[119] Qin, Fangbo and Lin, Shan and Li, Yangming and Bly, Randall A and Moe, Kris S and Hannaford, Blake. Towards better surgical instrument segmentation in endoscopic vision: multi-angle feature aggregation and contour supervision *IEEE Robotics and Automation Letters* (5) 2020

[120] Muneaki Miyasaka and Mohammad Haghighipanah and Yangming Li and Joseph Matheson and Andrew Lewis and Blake Hannaford. Modeling Cable Driven Robot with Hysteresis and Cable-Pulley Network Friction *IEEE/ASME Transactions on Mechatronics* 2020

[121] Pierre E. DuPont and Bradley J. Nelson and Michael Goldfarb and Blake Hannaford and Arianna Menciassi and Marcia K. O'Malley and Nabil Simaan and Pietro Valdastri and Guang-Zhong Yang. A decade retrospective of medical robotics research from 2010 to 2020 *Science Robotics* (6) 2021

[122] Adidharma, Lingga and Yang, Zixin and Young, Christopher and Li, Yangming and Hannaford, Blake and Humphreys, Ian and Abuzeid, Waleed M and Ferreira, Manuel and Moe, Kristen S and Bly, Randall A. Semiautomated Method for Editing Surgical Videos *Journal of Neurological Surgery Part B: Skull Base* (82) 2021

[123] Seslar, Stephen P and James, Ryan C and Hannaford, Blake and Saour, Basil and Monsky, Wayne. Virtual Reality (VR) Guided Telerobotic Cardiac Catheter Ablation is Feasible Over Low Bandwidth Network Connection *Circulation* (144) 2021

[124] Peng, Haonan and Lin, Shan and King, Daniel and Su, Yun-Hsuan and Bly, Randall A and Moe, Kris S and Hannaford, Blake. Reducing annotating load: Active learning with synthetic images in surgical instrument segmentation *arXiv preprint arXiv:2108.03534* 2021

[125] Li, Yangming and Konuthula, Neeraja and Humphreys, Ian M and Moe, Kris and Hannaford, Blake and Bly, Randall. Real-time Virtual Intraoperative CT for Image Guided Surgery *arXiv preprint arXiv:2112.02608* 2021

[126] Konuthula, Neeraja and Perez, Francisco A and Maga, A Murat and Abuzeid, Waleed M and Moe, Kris and Hannaford, Blake and Bly, Randall A. Automated atlas-based segmentation for skull base surgical planning *International journal of computer assisted radiology and surgery* (16) 2021

[127] Hwee, Joel and Lewis, Andrew and Raines, Allison and Hannaford, Blake. Evaluation of an inflated beam model applied to everted tubes *arXiv preprint arXiv:2107.05748* 2021

[128] Lin, Shan and Qin, Fangbo and Peng, Haonan and Bly, Randall A and Moe, Kris S and Hannaford, Blake. Multi-frame feature aggregation for real-time instrument segmentation in endoscopic video *IEEE Robotics and Automation Letters* (6) 2021

[129] Su, Yun-Hsuan and Huang, Kevin and Hannaford, Blake. Multicamera 3d viewpoint adjustment for robotic surgery via deep reinforcement learning *Journal of Medical Robotics Research* (6) 2021

[130] Su, Yun-Hsuan and Jiang, Wenfan and Chitrakar, Digesh and Huang, Kevin and Peng, Haonan and Hannaford, Blake. Local style preservation in improved gan-driven synthetic image generation for endoscopic tool segmentation *Sensors* (21) 2021

[131] Balasubramaniyam, Harini and Hannaford, Blake and Monsky, Wayne and Seslar, Stephen P and others. RURAL TELESURGERY NETWORK CHARACTERIZATION FOR FUTURE REMOTE CARDIAC CATHETER ABLATION *Cardiovascular Digital Health Journal* (3) 2022

[132] Seslar, Stephen P and Serafini, Brian and Kim, Lanu and Saour, Basil and Hannaford, Blake and Kohno, Tadayoshi and Hansen, Ryan and Monsky, Wayne and others. PO-631-01 TELEROBOTIC CARDIAC CATHETER ABLATION IN A RURAL HOSPITAL: A PROOF-OF-CONCEPT SIMULATION STUDY *Heart Rhythm* (19) 2022

[133] Li, Yangming and Konuthula, Neeraja and Humphreys, Ian M and Moe, Kris and Hannaford, Blake and Bly, Randall. Real-time virtual intraoperative CT in endoscopic sinus surgery *International Journal of Computer Assisted Radiology and Surgery* 2022

[134] Serafini, Brian and Kim, Lanu and Saour, Basil M and James, Ryan and Hannaford, Blake and Hansen, Ryan and Kohno, Tadayoshi and Monsky, Wayne and Seslar, Stephen P. Exploring telerobotic cardiac catheter ablation in a rural community hospital: A pilot study *Cardiovascular digital health journal* (3) 2022

[135] Gong, Chen and Zhou, Yaxuan and Lewis, Andrew and Chen, Pengcheng and Speich, Jason R and Porter, Michael P and Hannaford, Blake and Seibel, Eric J. Real-Time Camera Localization during Robot-Assisted Telecystoscopy for Bladder Cancer Surveillance *Journal of Medical Robotics Research* (7) 2022

[136] Qin, Fangbo and Xu, De and Hannaford, Blake and Hao, Tiantian. Object-Agnostic Vision Measurement Framework Based on One-Shot Learning and Behavior Tree *IEEE Transactions on Cybernetics* 2022

[137] Hansen, Ryan N and Saour, Basil Matthew and Serafini, Brian and Hannaford, Blake and Kim, Lanu and Kohno, Takayoshi and James, Ryan and Monsky, Wayne and Seslar, Stephen P. Opportunities and barriers to rural telerobotic surgical health care in 2021: report and research agenda from a stakeholder workshop *Telemedicine and e-Health* (28) 2022

[138] Peng, Haonan and Lewis, Andrew and Hannaford, Blake. Ablation Study on Features in Learning-based Joints Calibration of Cable-driven Surgical Robots *arXiv preprint arXiv:2302.04999* 2023

[139] Konuthula, Neeraja and Bly, Randall and Abuzeid, Waleed M and Humphreys, Ian M and Masco, Vanessa and Hannaford, Blake and Moe, Kris S. Multiportal retrograde endoscopy to enhance surgical target visualization: a pilot study *Journal of Neurological Surgery Part B: Skull Base* 2023

Conference Proceedings

Full papers, Peer Review

[1] B. Hannaford and R. Maduell and M.H. Nam and V. Lakshminarayanan and L. Stark. Effects of Loads on Time-Optimal Head Movements: EMG, Oblique, and Main Sequence Relationships *Proceedings of the 19th Annual Conference on Manual Control* 1983

[2] B. Hannaford and L. Stark. Control Strategies for Neurologically Ballistic Movements *Proceedings of the 37th ACEMB* 1984

[3] W.S. Kim and S.H. Lee and B. Hannaford and L. Stark. Inverse Modeling to Obtain Head Movement Controller Signal *Proceedings of the 20th Annual Conference on Manual Control* 1984

[4] B. Hannaford. The Electronic Spreadsheet: A Workstation Front End for Parallel Processors *Proceedings IEEE Computer Conference* 1986

[5] P. Fiorini and B. Hannaford and B. Jau and E. Kan and A. Bejczy. Hand Trigger System for Bi-Lateral Gripping Control in Teleoperation *Proceedings of the IEEE International Conference on Robotics and Automation* (1)1987

[6] B. Hannaford. Task Level Testing of the JPL-OMV Smart End Effector *Proceedings of the JPL - NASA Workshop on Space Telerobotics* (2)1987

[7] B. Hannaford and M. Salganicoff and A.K. Bejczy. Displays for Telemanipulation *Proceedings Spatial Displays and Spatial Instruments Conference* 1987

[8] B. Hannaford and L. Stark. Local Linearity of EMG to activation Mapping: Simulation Compared with Experiments *Proceedings 1987 EMBS* 1987

[9] A.K. Bejczy and B. Hannaford. Man-Machine Interaction in Space Telerobotics *Proceedings Intl. Symposium on Teleoperation and Control* 1988

[10] A.K. Bejczy and B. Hannaford and Z. Szakaly. Multi-Mode Manual Control in Telerobotics *Proceedings of Romansy '88* 1988

[11] B. Hannaford. Homeomorphic Decomposition of the 6th Order Non-Linear Model of Human Movement *Proceedings 10th IEEE/EMBS* 1988

[12] B. Hannaford and R. Anderson. Experimental and Simulation Studies of Hard Contact in Force Reflecting Teleoperation *Proc. IEEE Conference on Robotics and Automation* 1988

[13] B. Hannaford and P. Fiorini. A Detailed Model of Bilateral (Position/Force) Teleoperation *Proceedings International Conference on Systems, Man, and Cybernetics* 1988

[14] B. Hannaford and L. Stark and G. Obrecht. Multi-Screen Micro-Computer Text Display Device *Proceedings International Conference on Systems, Man, and Cybernetics* 1988

[15] C. Pedrono and B. Hannaford and G. Obrecht and L. Stark. Testing Functional Fields of View with the Multi-Screen Text Display Device RSG+ *Proceedings International Conference on Systems, Man, and Cybernetics* 1988

[16] B. Hannaford. Stability and Performance Tradeoffs in Bi-Lateral Telemanipulation *Proceedings of IEEE Intl. Conf. on Robotics & Automation* (3)1989

[17] B. Hannaford and W.S. Kim. Force Reflection, Shared Control, and Time Delay in Telemanipulation *Proceedings, IEEE Intl. Conference on Systems, Man, & Cybernetics* 1989

[18] B. Hannaford and P. Lee. Hidden Markov Model Analysis of Force/Torque Information in Telemanipulation *Proceedings 1st International Symposium on Experimental Robotics* 1989

[19] B. Hannaford and L. Wood. Performance Evaluation of a 6 Axis High Fidelity Generalized Force Reflecting Teleoperator *Proceedings JPL/NASA Conference on Space Telerobotics* 1989

[20] B. Hannaford. Scaling, Impedance, and Power Flows in Force Reflecting Teleoperation *Proceedings ASME Winter Annual Meeting* (26, Robotics Research)1990

[21] B. Hannaford and P. Lee. Multi-Dimensional Hidden Markov Model of Telemanipulation Tasks with Varying Outcomes *Proceedings IEEE Intl. Conf. Systems Man and Cybernetics* 1990

[22] W.S. Kim and B. Hannaford and A. Bejczy. Shared Compliance Control and Time Delay in Telemanipulation *Preprint: Proceedings, First Intl. Symposium on Measurement and Control in Robotics* 1990

[23] P. Lee and A. Bejczy and P. Schenker and B. Hannaford. Telerobot Configuration Editor *Proceedings IEEE Intl. Conf. Systems Man and Cybernetics* 1990

[24] B. Hannaford. Hidden Markov Model Analysis of Manufacturing Process Information *Proc. IROS 1991* 1991

[25] P.H. Marbot and B. Hannaford. Mini Direct Drive Arm for Biomedical Applications *Proceedings of ICAR 91* 1991

[26] P. Bhatti and P.H. Marbot and B. Hannaford. Microscopic Pick and Place with the Mini-Direct Drive Arm *SPIE Telemanipulation Symposium* 1992

[27] D. Kung and J. Parsons and B. Hannaford. Visualization of Manipulability with Mathematica *Proceedings IASTED Control & Robotics* 1992

[28] I. MacDuff and S. Venema and B. Hannaford. The Anthroform Neural Controller: A System for Detailed Emulation of Neural Circuits *Proceedings, IEEE International Conference on Systems, Man, and Cybernetics* (1)1992

[29] I. MacDuff and S. Venema and B. Hannaford. The Anthroform Neural Controller: An Architecture for Spinal Circuit Emulation *Proceedings of IEEE International Conference on EMBS* 1992

[30] C.A. Lawn and B. Hannaford. Performance Testing of Passive Communication and Control in Teleoperation with Time Delay *Proc. IEEE Intl. Conf. on Robotics and Automation* (3)1993

[31] P.H. Marbot and B. Hannaford. The Mechanical Spindle: a Replica of the Mammalian Muscle Spindle *Proceedings, IEEE Conference on Engineering in Medicine and Biology* 1993

[32] P. Buttolo and D.Y. Hwang and B. Hannaford. Hard Disk Actuators for Mini-Teleoperation *Proc. SPIE Telemanipulator and Telepresence Technologies Symposium* 1994

[33] C.P. Chou and B. Hannaford. Static and Dynamic Characteristics of McKibben Pneumatic Artificial Muscles *Proc. IEEE Intl. Conf. on Robotics and Automation* 1994

[34] B. Hannaford and S. Venema and A.K. Bejczy. MICROTREX: Micro-Telerobotic Flight Experiment *Proceedings AIAA Space Programs and Technologies Conference; AIAA 94-4509* 1994

[35] B. Hannaford and J.M. Winters and C.P. Chou. The Anthroform Biorobotic Arm *Video Proceedings, IEEE Intl. Conf. on Robotics and Automation* 1994

[36] D.Y. Hwang and B. Hannaford. Modeling and Stability analysis of a Scaled Telemanipulation *Proceedings RO-MAN 94* 1994

[37] K. Kuhn and B. Hannaford. A "Hands-On" Course in Consumer Electronics *Proceedings Workshop on Mechatronics Education* 1994

[38] B. Hannaford and P.H. Marbot and M. Moreyra and S. Venema. A 5-Axis Mini Direct Drive Robot for Time Delayed Teleoperation *Proc. Intelligent Robots and Systems (IROS 94)* (1)1994

[39] P. Buttolo and B. Hannaford. Advantages of Actuation Redundancy for the Design of Haptic Displays *Proceedings, ASME Fourth Annual Symposium on Haptic Interfaces for Virtual Environment and Teleoperator Systems* (DSC-57-2)1995

[40] P. Buttolo and B. Hannaford. Pen Based Force Display for Precision Manipulation of Virtual Environments *Proceedings VRAIS-95* 1995

[41] P. Buttolo and D. Kung and B. Hannaford. Manipulation in Real, Virtual, and Remote Environments *Video Proceedings, IEEE VRAIS-95* 1995

[42] P. Buttolo and D. Kung and B. Hannaford. Manipulation in Real, Virtual, and Remote Environments *Proceedings, IEEE International Conference on Systems, Man, and Cybernetics* 1995

[43] B. Hannaford and A.K. Bejczy and P. Buttolo and M. Moreyra and S. Venema. Mini-Teleoperation Technology for Space Research *Procedings International Symposium on Microsystems Intelligent Materials and Robots (MIMR-95)* 1995

[44] P.J. Laughlin and J.W. Pitton and B Hannaford. Fast Approximations to Positive Time-Frequency Distributions with Applications *Proceedings 1995 International Conference on Acoustics, Speech, and Signal Processing* (2)1995

[45] S. Venema and B. Hannaford. Miniature Telerobots in Space Applications *Proc. Int. Conf. on Integrated Micro-Nanotechnology for Space Applications* 1995

[46] P. Buttolo and R. Oboe and B. Hannaford and W. McNeely. Force Feedback in Shared Virtual Simulations *Proceedings MICAD* 1996

[47] B. Hannaford and J. Hewitt and T. Maneewarn and S. Venema and M. Appleby and R. Ehresman. Telerobotic Macros for Remote Handling of Protein Crystals *Proceedings Intl. Conf. on Advanced Robotics, (ICAR97)* 1997

[48] B. Hannaford and J. Hewitt and T. Maneewarn and S. Venema and M. Appleby and R. Ehresman. Telerobotic Remote Handling of Protein Crystals *IEEE International Conference on Robotics and Automation* 1997

[49] R. Adams and B. Hannaford. A Two-Port Framework for the Design of Unconditionally Stable Haptic Interfaces *Proceedings of IROS 98* 1998

[50] R. Adams and M. Moreyra and B. Hannaford. Stability and Performance of Haptic Displays: Theory and Experiments *Proceedings of the ASME Winter Annual Meeting Haptics Workshop* 1998

[51] B. Hannaford and J. Trujillo and M. Sinanan and M. Moreyra and J. Rosen and J. Brown and R. Lueschke and M. MacFarlane. Computerized Endoscopic Surgical Grasper *Proceedings, MMVR-98 (Medicine Meets Virtual Reality), San Diego* 1998

[52] G.K. Klute and J. Czerniecki and B. Hannaford. Development of Powered Prosthetic Lower Limb *Proc. 1st National Mtg, Veterans Affairs Rehab. R&D Service* 1998

[53] G. Klute and B. Hannaford. Fatigue Characteristics of McKibben Artificial Muscle Actuators *Proceedings. IROS-98* 1998

[54] T. Maneewarn and B. Hannaford. Haptic Feedback of Kinematic Conditioning for Telerobotic Applications *Proceedings of IROS 98* 1998

[55] M. Moreyra and B. Hannaford. A Practical Measure of Dynamic Response of Haptic Devices *Proc. IEEE Intl. Conf. on Robotics and Automation* 1998

[56] R. Adams and M. Moreyra and B. Hannaford. Excalibur, A Three-Axis Force Display *ASME Winter Annual Meeting Haptics Symposium* 1999

[57] J. Rosen J. and M. MacFarlane and C. Richards and B. Hannaford and C. Pellegrini and M. Sinanan. Surgeon/Endoscopic Tool Force-Torque Signatures In The Evaluation of Surgical Skills During Minimally Invasive Surgery *Proceedings, MMVR-99 (Medicine Meets Virtual Reality)* 1999

[58] T. Maneewarn and B. Hannaford. Augmented Haptics of Manipulator Kinematic Condition *Proc. SPIE Telemanipulator Workshop* 1999

[59] T. Maneewarn and B. Hannaford and D. Storti and M. Ganter. Haptic Rendering For Internal Content Of An Implicit Object *ASME Winter Annual Meeting Haptics Symposium* 1999

[60] K.N. Jaax and P.H. Marbot and B. Hannaford. Development of a Biomimetic Position Sensor for Robotic Kinesthesia *Proceedings, IROS 2000* 2000

[61] G. Klute and J. Czerniecki and B. Hannaford. Artificial tendons: biomechanical design properties for prosthetic lowerlimbs *Proc. 22nd Annual Intl. Conf. IEEE Engineering in Medicine and Biology Society and World Congress on Medical Physics and Biomedical Engineering* (3)2000

[62] G.K. Klute and J. Czerniecki and B. Hannaford. Muscle-Like Pneumatic Actuators for Below-Knee Prostheses, *Proceedings, Actuator 2000: 7th International Conference on New Actuators* 2000

[63] J. Dosher and B. Hannaford. Detection Thresholds for Small Haptic Effects *Proceedings, SPIE Teleoperator and Telemanipulator Workshop* 2001

[64] J. Dosher and G. Lee and B. Hannaford. How low can you go? Detection thresholds for small haptic effects. *Touch in Virtual Environments, Proceedings USC Workshop on Haptic Interfaces* 2001

[65] B. Hannaford and G. Klute and K. Jaax. Bio-inspired Actuation and Sensing *Autonomous Robots (Special Issue, Papers from the JPL workshop on Biomorphic Robotics, August 2000)* 2001

[66] B. Hannaford and J.H Ryu. Time Domain Passivity Control of Haptic Interfaces *Proc. IEEE Intl. Conference on Robotics and Automation* 2001

[67] Y.S. Kim and B. Hannaford. Some Practical Issues in Time Domain Passivity Control of Haptic Interfaces *Proceedings IROS 2001* 2001

[68] B. Hannaford and J.H. Ryu and D.S. Kwon and Y.S. Kim and J.B. Song. Testing Time Domain Passivity Control of Haptic Enabled Systems *Experimental Robotics 2002: Proceedings of the International Symposium on Experimental Robotics 2002 (ISER-02)* 2002

[69] J. Rosen and J.D. Brown and L. Chang and M. Barreca and M. Sinanan and B. Hannaford. The BlueDRAGON - A System for Measuring the Kinematics and the Dynamics of Minimally Invasive Surgical Tools In Vivo *Proc. IEEE Intl. Conf. on Robotics and Automation ICRA-2002* 2002

[70] J.H. Ryu and D.S. Kwon and B. Hannaford. Stable Teleoperation with Time Domain Passivity Control *IEEE Intl. Conference on Robotics and Automation, ICRA 2002* 2002

[71] Jee-Hwan Ryu and Dong-Soo Kwon and Blake Hannaford. Control of a Flexible Manipulator with Non-collocated Feedback: Time Domain Passivity Approach *The 2nd Joint IEEE CSS/RAS International Workshop on Control Problems in Robotics and Automation* 2002

[72] Jee-Hwan Ryu and Dong-Soo Kwon and Blake Hannaford. Stability Guaranteed Control: Time Domain Passivity Approach *IEEE/RSJ International Conference on Intelligent Robots and Systems (IROS2002)* 2002

[73] G. Lee and B. Hannaford. Anisotropies of Touch in Haptic Icon Exploration *IEEE/RSJ International Conference on Intelligent Robots and Systems* 2003

[74] Lee G.S. and B Hannaford. Preliminary two dimensional haptic thresholds and task performance enhancements *Proceedings, 2003 Haptics Symposium* 2003

[75] C. Preusche and G. Hirzinger and J.H. Ryu and B. Hannaford. Time Domain Passivity Control for 6 Degrees of Freedom Haptic Displays *IEEE/RSJ International Conference on Intelligent Robots and Systems* 2003

[76] J.H. Ryu and B. Hannaford and C. Preusche and G. Hirzinger. Time Domain Passivity Control with Reference Energy Behavior *Proc. IEEE/RSJ International Conference on Intelligent Robots and Systems* 2003

[77] T.M. Kowalewski and J. Rosen and L. Chang and M. Sinanan and B. Hannaford. Optimization of a vector quantization codebook for objective evaluation of surgical skill. *Proc. Medicine Meets Virtual Reality 12* 2004

[78] J. Lester and B. Hannaford and G. Borriello. 'Are You with Me?' - Using Accelerometers to Determine If Two Devices Are Carried by the Same Person *Proceedings of the Second International Conference on Pervasive Computing* 2004

[79] M.J.H. Lum and J. Rosen and M. Sinanan and B. Hannaford. Kinematic optimization of a spherical mechanism for a minimally invasive surgical robot. *Proc. IEEE International Conference on Robotics and Automation* 2004

[80] J. Lester and T. Choudhury and N. Kern and G. Borriello and B. Hannaford. A Hybrid Discriminative/Generative Approach for Modeling Human Activities *Proceedings of the Nineteenth International Joint Conference on Artificial Intelligence* 2005

[81] S. De and P. Swanson and M.N. Sinanan and J. Rosen and A. Dagon and B. Hannaford. Tissue Damage due to Mechanical Stresses as applied during Minimally Invasive Surgery *Proceedings of the 2006 BioRob Conference* 2006

[82] K. Fodero and H. King and M. J.H. Lum and C. Bland and J. Rosen and M.N. Sinanan and B. Hannaford. Control System Architecture for a Minimally Invasive Surgical Robot *Proceedings of Medicine Meets Virtual Reality* 2006

[83] M.J.H. Lum and D. Trimble and J. Rosen and H. King and G. Sankarayanaranan and J. Dosher and R. Leuschke and B Martin-Anderson and M.N. Sinanan and B. Hannaford. Multidisciplinary approach for developing a new minimally invasive surgical robot system *Proceedings of the 2006 BioRob Conference* 2006

[84] M.J.H. Lum and D. Warden and J. Rosen and M.N. Sinanan and B. Hannaford. Hybrid analysis of a spherical mechanism for a minimally invasive surgical (MIS) robot - design concepts for multiple optimzations *Proceedings of Medicine Meets Virtual Reality* 2006

[85] T. Mackel and J. Rosen and C. Pugh. Data Mining of the E-pelvis Simulator Database A Quest for a Generalized Algorithm for Objectively Assessing Medical Skill *Proceedings of Medicine Meets Virtual Reality* 2006

[86] J.C. Perry and J. Rosen. Design of a 7 Degree-of-Freedom Upper-Limb Powered Exoskeleton *Proceedings of the 2006 BioRob Conference* 2006

[87] Ganesh Sankaranarayanan and B. Hannaford. Virtual Coupling Schemes for Causality Control in Networked Haptic Environments *Proceedings of the 2006 BioRob Conference* 2006

[88] S. De and A. Dagan and P. Roan and J. Rosen and M. Sinanan and M. Gupta and B. Hannaford. CIELab and sRGB color values of in vivo normal and grasped porcine liver *Proceedings MMVR 2007* 2007

[89] R. Donlin and R. Leuschke and B. Hannaford. Experimental Evaluation of Attachment Methods for a Multifinger Haptic Device *Proceedings of World Haptics 2007* 2007

[90] D.W. Friedman and J. Dosher and T. Kowalewski and J. Rosen and B. Hannaford. Automated Tool Handling for the Traumapod Surgical Robot *Proceedings of IEEE Int. Conf. on Robotics and Automation, ICRA2007, Rome Italy* 2007

[91] B. Hannaford and R. Leuschke. Fast Rendering for a Multifinger Haptic Display *Proceedings of World Haptics 2007* 2007

[92] R. Leuschke and A. Bhandari and B. Sires and B. Hannaford. Low Cost Eye Surgery Simulator with Skill Assessment Component *Proceedings MMVR 2007* 2007

[93] M.J.H Lum and J. Rosen and H. King and D.C.W. Friedman and G. Donlin and Ganesh Sankaranarayanan and B. Harnett and L. Huffnam and C. Doarn and T. Broderick and B. Hannaford. Telesurgery Via Unmanned Aerial Vehicle (UAV) with a Field Deployable Surgical Robot *Proceedings, Medicine Meets Virtual Reality (MMVR)* 2007

[94] Ganesh Sankaranarayanan and B. Hannaford. Comparison of Performance of Virtual Coupling Schemes for Haptic Collaboration using Real and Emulated Internet Connections *Proceedings of Robocom 2007* 2007

[95] Ganesh Sankaranarayanan and H. King and S.Y. Ko and M.J.H Lum and D.C.W. Friedman and J. Rosen and B. Hannaford. Portable Surgery Master Station for Mobile Robotic Telesurgery *Proceedings of Robocom 2007* 2007

[96] Ganesh Sankaranarayanan and L. Potter and B. Hannaford. Measurement and Simulation of Time Varying Packet Delay with Applications to Networked Haptic Virtual Environments *Proceedings of 1st international Conference on Robot Communication and Coordination (Robocom 2007)* 2007

[97] X. Yu and H.J. Chizeck and B. Hannaford. Comparison of Transient Performance in the Control of Soft Tissue Grasping *Proceedings of IROS 2007, San Diego, CA* 2007

[98] M.J.H. Lum and D.C.W. Friedman and Ganesh Sankaranarayanan and H. King and A. Wright and M. Sinanan and T. Lendvay and J. Rosen and B. Hannaford. Objective Assessment of Telesurgical Robot Systems: Telerobotic FLS *Proceedings, Medicine Meets Virtual Reality (MMVR)* 2008

[99] Ganesh Sankaranarayanan and B. Hannaford. Experimental Comparison of Internet Haptic Collaboration with Time-Delay Compensation Techniques *Proceedings, IEEE International Conference on Robotics and Automation (ICRA2008)* 2008

[100] Ganesh Sankaranarayanan and B. Hannaford. Experimental Internet Haptic Collaboration Using Virtual Coupling Schemes *Proceedings 2008 Haptics Symposium* 2008

[101] R. Leuschke and R. Donlin and M. Claus and M. Nugent and D. van der Reyden and B. Hannaford. Haptic Characteristics of Document Conservation Tasks *Proceedings 2008 Haptics Symposium* 2008 5P 383-386

[102] H.H. King and K. Tadano and R. Donlin and D. Friedman and M.J.H. Lum and V. Asch and C. Wang and K. Kawashima and B. Hannaford. Preliminary protocol for interoperable telesurgery *Advanced Robotics, 2009. ICAR 2009. International Conference on* 2009

[103] M.J.H. Lum and J. Rosen and H. H. King and D.W. Friedman and T.S. Lendvay and A. S. Wright and M.N. Sinanan and B. Hannaford. Teleoperation in Surgical Robotics - Network Latency Effects on Surgical Performance *Proceedings,31st Annual International Conference of the IEEE EMBS* 2009

[104] M.J.H. Lum and J. Rosen and T.S. Lendvay and M.N. Sinanan and B. Hannaford. Effect of Time Delay on TeleSurgical Performance *IEEE International Conference on Robotics and Automation (ICRA)* 2009

[105] E. Naerum and B. Hannaford. Global Transparency Analysis of the Lawrence Teleoperator Architecture *IEEE International Conference on Robotics and Automation (ICRA)* 2009

[106] E Naerum and H. Hawkeye King and B. Hannaford. Robustness of the Unscented Kalman Filter for State and Parameter Estimation in an Elastic Transmission *Proceedings Robotics Science and Systems 2009 (http://www.roboticsproceedings.org)* 2009

[107] B. Hannaford and J. Dosher and S. Venkatachalam. Haptic Exploration of Spheres: Techniques and Initial Experiments *North American Haptics Symposium 2010* 2010

[108] H.H. King and R. Donlin and B. Hannaford. Haptic Thresholds for Single vs. Multi-Finger Icons *Proceedings of North American Haptics Symposium 2010* 2010

[109] H.H. King and B. Hannaford and J. Kammerl and E. Steinbach. Establishing Multimodal Telepresense Sessions using the Session Initiation Protocol (SIP) and Advanced Haptic Codecs *Proceedings of North American Haptics Symposium 2010* 2010

[110] H. Hawkeye King and Blake Hannaford and Ka-Wai Kwok and Guang-Zhong Yang and Paul Griffiths and Allison Okamura and Ildar Farkhatdinov and Jee-Hwan Ryu and Ganesh Sankaranarayanan and Venkata Arikatla and Kotaro Tadano and Kenji Kawashima and Angelika Peer and Thomas Schau and Martin Buss and Levi Miller and Daniel Glozman and Jacob Rosen and Thomas Low. Plugfest 2009: Global Interoperability in Telerobotics and Telemedicine *International Conference on Robotics and Automation, ICRA 2010* 2010

[111] B. Redmond and R. Aina and T. Gorti and B. Hannaford. Haptic Characteristics of some Activities of Daily Living *North American Haptics Symposium 2010* 2010

[112] R.J. Adams and A.B. Olowin and B. Hannaford and O.S. Sands. Tactile Data Entry for Extravehicular Activity *Proceedings, IEEE World Congress on Haptics* 2011

[113] P. Buckley and H. Hawkeye King and M. Wang and B. Hannaford. Effects of Thermal Protection Methods on Haptic Perception *Proceedings, IEEE World Congress on Haptics* 2011

[114] K. Haller and B. Hannaford. Haptic Exploration of Spheres: Anatomical Regions used for Perception *Proceedings, IEEE World Congress on Haptics* 2011

[115] F. Rydén and H. J. Chizeck and S. Nia Kosari and H. King and B. Hannaford. Using Kinect and a Haptic Interface for Implementation of Real-Time Virtual Fixture *Robotics Sciences and Systems, Workshop on RGB-D: Advanced Reasoning with Depth Cameras,* 2011

[116] F. Ryden and S. Nia Kosari and H. Chizeck. Proxy Method for Fast Haptic Rendering from Time Varying Point Clouds *Proceedings IROS 2011, San Francisco* 2011

[117] S N Kosari and Srikrishnan Ramadurai and HJ Chizeck and Blake Hannaford. Robotic Compression of Soft Tissue *Proc. 2012 IEEE International Conference on Robotics and Automation, St* 2012

[118] Srikrishnan Ramadurai and SN Kosari and H. Hawkeye King and HJ Chizeck and Blake Hannaford. Application of Unscented Kalman Filter to a Cable Driven Surgical Robot: A Simulation Study, *2012 IEEE International Conference on Robotics and Automation, St. Paul-Minneapolis,* 2012

[119] R.J. Adams and A. Olowin and E. Krekovich and B. Hannaford and J.I.C. Lindsay and P. Homer and J. Patrie and S. Sands. Glove-Enabled Computer Operations (GECO): Design and Testing of an Extravehicular Activity Glove Adapted for Human-Computer Interface *Proc. 43rd International Conference on Environmental Systems* 2013

[120] I. Jiang and Y.Ishikawa and J.Lindsay and B. Hannaford. Design and Optimization of Support Structures for Tactile Feedback *Proc. 2013 World Haptics Congress,* 2013

[121] J. Lindsay and R. Adams and B. Hannaford. Improving Tactile Feedback with an Impedance Adapter *Proc. 2013 World Haptics Congress* 2013

[122] J.I.C. Lindsay and I. Jiang and E. Larson and R.J. Adams and S. Patel and B. Hannaford. Good Vibrations; An Evaluation of Vibrotactile Impedance Matching for Low Power Wearable Applications *Proc. UIST 13* 2013

[123] A. Lewis and B. Hannaford. Dynamically evaluated gravity compensation for the raven surgical robot *Proc. Robotics and Automation (ICRA), 2014 IEEE International Conference on* 2014

[124] Muneaki Miyasaka and Joseph Matheson and Andrew Lewis and Blake Hannaford. Measurement of the cable-pulley coulomb and viscous friction for a cable-driven surgical robotic system *Intelligent Robots and Systems (IROS), 2015 IEEE/RSJ International Conference on* 2015

[125] N. Aghdasi and Y. Li and A. Berens and K. Moe and R. Bly and B. Hannaford. Atlas and feature based 3D pathway visualization enhancement for skull base pre-operative fast planning from head CT *Proc. SPIE Medical Imaging Conference* 2015

[126] Y. Gong and D. Hu and B. Hannaford and E. Seibel. Toward real-time endoscopically-guided robotic navigation based on a 3D virtual surgical field modeling *Proc. SPIE 9415, Medical Imaging 2015: Image-Guided Procedures, Robotic Interventions, and Modeling, 94150C (March 18, 2015)* 2015

[127] Mohammad Haghighipanah and Yangming Li and Muneaki Miyasaka and Blake Hannaford. Improving position precision of a servo-controlled elastic cable driven surgical robot using unscented kalman filter *2015 IEEE/RSJ international conference on intelligent robots and systems (IROS)* 2015

[128] Danying Hu and Yuanzheng Gong and Blake Hannaford and Eric J. Seibel. Path Planning for Semi-automated Simulated Robotic Neurosurgery *2015 IEEE/RSJ International Conference on Intelligent Robots and Systems (IROS)* 2015

[129] Danying Hu and Yuanzheng Gong and Blake Hannaford and Eric J. Seibel. Semi-autonomous simulated brain tumor ablation with RAVENII Surgical Robot using behavior tree *2015 IEEE International Conference on Robotics and Automation (ICRA)* 2015

[130] Mohammad Haghighipanah and Muneaki Miyasaka and Yangming Li and Blake Hannaford. Unscented Kalman Filter and 3D Vision to Improve Cable Driven Surgical Robot Joint Angle Estimation *2016 IEEE International Conference on Robotics and Automation* 2016

[131] Muneaki Miyasaka and Mohammad Haghighipanah and Yangming Li and Blake Hannaford. Hysteresis Model of Longitudinally Loaded Cable for Cable Driven Robots and Identification of the Parameters *2016 IEEE International Conference on Robotics and Automation* 2016

[132] Yangming Li and Muneaki Miyasaka and Haghighipanah Mohammad and Lei Cheng and Blake Hannaford. Dynamic modeling of cable driven elongated surgical instruments for sensorless grip force estimation *Robotics and Automation (ICRA), 2016 IEEE International Conference on* 2016

[133] Muneaki Miyasaka and Haghighipanah Mohammad and Yangming Li and Blake Hannaford. Hysteresis model of longitudinally loaded cable for cable driven robots and identification of the parameters *Robotics and Automation (ICRA), 2016 IEEE International Conference on* 2016

[134] Yangming Li and Shuai Li and David Caballero and Muneaki Miyasaka and Andrew Lewis and Blake Hannaford. Improving Control Precision and Motion Adaptiveness for Surgical Robot with Recurrent Neural Network *Intelligent Robots and Systems (IROS), 2017 IEEE/RSJ International Conference on* 2017

[135] Jacob Rosen and Laligam Sekhar and Daniel Glozman and Muneaki Miyasaka and Jesse Dosher and Brian Dellon and Kris Moe and Aylin Kim and Luis Kim and Thomas Lendvay and Yangming Li and Blake Hannaford. Roboscope: A Flexible and Bendable Surgical Robot for Single Portal Minimally Invasive Surgery *Robotics and Automation (ICRA), 2017 IEEE International Conference on* 2017

[136] Yangming Li and Shuai Li and Blake Hannaford. A Novel Recurrent Neural Network for Improving Redundant Manipulator Motion Planning Completeness *IEEE International Conference on Robotics and Automation (ICRA)* 2018

[137] Kyle Lindgren and Niveditha Kalavakonda and David E Caballero and Kevin Huang and Blake Hannaford. Learned Hand Gesture Classification Through Synthetically Generated Training Samples *2018 IEEE/RSJ International Conference on Intelligent Robots and Systems (IROS)* 2018

[138] Yun-Hsuan Su and Issac Huang and Kevin Huang and Blake Hannaford. Comparison of 3D Surgical Tool Segmentation Procedures with Robot Kinematics Prior *2018 IEEE/RSJ International Conference on Intelligent Robots and Systems (IROS)* 2018

[139] Yun-Hsuan Su and Kevin Huang and Blake Hannaford. Real-time vision-based surgical tool segmentation with robot kinematics prior *Medical Robotics (ISMR), 2018 International Symposium on* 2018

[140] Niveditha Kalavakonda and Blake Hannaford and Zeeshan Qazi and Laligam Sekhar. Autonomous Neurosurgical Instrument Segmentation Using End-to-End Learning *Proceedings of the IEEE Conference on Computer Vision and Pattern Recognition Workshops* 2019

[141] Niveditha Kalavakonda and Laligam Sekhar and Blake Hannaford. Augmented Reality Application for Aiding Tumor Resection in Skull-Base Surgery *2019 International Symposium on Medical Robotics (ISMR)* 2019

[142] Shan Lin and Fangbo Qin and Randall A Bly and Kris S Moe and Blake Hannaford. Automatic Sinus Surgery Skill Assessment Based on Instrument Segmentation and Tracking in Endoscopic Video *International Workshop on Multiscale Multimodal Medical Imaging* 2019

[143] Fangbo Qin and Yangming Li and Yun-Hsuan Su and De Xu and Blake Hannaford. Surgical Instrument Segmentation for Endoscopic Vision with Data Fusion of rediction and Kinematic Pose *2019 International Conference on Robotics and Automation (ICRA)* 2019

[144] Yun-Hsuan Su and Kevin Huang and Blake Hannaford. Multicamera 3D Reconstruction of Dynamic Surgical Cavities: Camera Grouping and Pair Sequencing *2019 International Symposium on Medical Robotics (ISMR)* 2019

[145] Yun-Hsuan Su and Kevin Huang and Blake Hannaford. Multicamera 3D Reconstruction of Dynamic Surgical Cavities: Non-Rigid Registration and Point Classification *2019 IEEE/RSJ International Conference on Intelligent Robots and Systems (IROS)* 2019

[146] S. Venema and B. Hannaford. Kalman Filter Based Calibration of Precision Motion Control *Proceedings of IROS-95* August 1995

[147] Lin, Shan and Gu, Xinyu and Bly, Randall A and Moe, Kris S and Hannaford, Blake. Video-based automatic and objective endoscopic sinus surgery skill assessment *Medical Imaging 2020: Image-Guided Procedures, Robotic Interventions, and Modeling* (11315)2020

[148] Lewis, Andrew and Drajeske, David and Raiti, John and Berens, Angelique and Rosen, Jacob and Hannaford, Blake. RAVEN-S: Design and Simulation of a Robot for Teleoperated Microgravity Rodent Dissection Under Time Delay *2020 IEEE International Conference on Robotics and Automation (ICRA)* 2020

[149] Su, Yun-Hsuan and Lindgren, Kyle and Huang, Kevin and Hannaford, Blake. A comparison of surgical cavity 3d reconstruction methods *2020 IEEE/SICE International Symposium on System Integration (SII)* 2020

[150] Su, Yun-Hsuan and Sosnovskaya, Yana and Hannaford, Blake and Huang, Kevin. Securing robot-assisted minimally invasive surgery through perception complementarities *2020 Fourth IEEE International Conference on Robotic Computing (IRC)* 2020

[151] Lin, TzuHsiang and Huang, LeAnn and Hannaford, Blake and Tran, Christopher and Raiti, John and Zaragoza, Richard and Feng, Tian and Wagner, Linda and James, Jenna. Empathics system: application of emotion analysis AI through smart glasses *Proceedings of the 13th ACM International Conference on PErvasive Technologies Related to Assistive Environments* 2020

[152] Su, Yun-Hsuan and Huang, Kevin and Hannaford, Blake. Multicamera 3d reconstruction of dynamic surgical cavities: Autonomous optimal camera viewpoint adjustment *2020 International Symposium on Medical Robotics (ISMR)* 2020

[153] Peng, Haonan and Yang, Xingjian and Su, Yun-Hsuan and Hannaford, Blake. Real-time data driven precision estimator for raven-ii surgical robot end effector position *2020 IEEE International Conference on Robotics and Automation (ICRA)* 2020

[154] Su, Yun-Hsuan and Munawar, Adnan and Deguet, Anton and Lewis, Andrew and Lindgren, Kyle and Li, Yangming and Taylor, Russell H and Fischer, Gregory S and Hannaford, Blake and Kazanzides, Peter. Collaborative Robotics Toolkit (CRTK): Open software framework for surgical robotics research *2020 Fourth IEEE International Conference on Robotic Computing (IRC)* 2020

[155] Lin, Shan and Qin, Fangbo and Li, Yangming and Bly, Randall A and Moe, Kris S and Hannaford, Blake. Lc-gan: Image-to-image translation based on generative adversarial network for endoscopic images *2020 IEEE/RSJ International Conference on Intelligent Robots and Systems (IROS)* 2020

[156] Kaplan, Jack and Sosnovskaya, Yana and Arnold, Matthew and Hannaford, Blake. Sensor Fusion for Force and Position Calibration of a Motorized Surgical Smart Grasper *2021 International Symposium on Medical Robotics (ISMR)* 2021

[157] Lewis, Andrew and Gong, Chen and Zhou, Yaxuan and Chen, Pengcheng and Porter, Michael P and Hannaford, Blake and Seibel, Eric J. Real Time Localization of Cystoscope Angulation in 2D Bladder Phantom for Telecystoscopy *2021 International Symposium on Medical Robotics (ISMR)* 2021

[158] Hwee, Joel and Lewis, Andrew and Bly, Randall A and Moe, Kris S and Hannaford, Blake. An everting emergency airway device *2021 International Symposium on Medical Robotics (ISMR)* 2021

[159] Li, Yangming and Bly, Randall and Akkina, Sarah and Qin, Fangbo and Saxena, Rajeev C and Humphreys, Ian and Whipple, Mark and Moe, Kris and Hannaford, Blake. Learning surgical motion pattern from small data in endoscopic sinus and skull base surgeries *2021 IEEE International Conference on Robotics and Automation (ICRA)* 2021

[160] Chen, Pengcheng and Gong, Chen and Lewis, Andrew and Zhou, Yaxuan and Poor, Seyed Mohammad Mohaghegh and Hannaford, Blake and Seibel, Eric J. Real-time flexible endoscope navigation within bladder phantom having sparse non-distinct features is enhanced with robotic control *Medical Imaging 2022: Image-Guided Procedures, Robotic Interventions, and Modeling* (12034)2022

[161] Sosnovskaya, Yana and Shlizerman, Eli and Hannaford, Blake and Sinanan, Mika N. Comparison of Deep Learning and Signal Processing Methods for Removing a Ringing Artifact from Ultrasound Signals *2023 IEEE Sensors Applications Symposium (SAS)* 2023

[162] Raines, Allison and Lewis, Andrew and Hwee, Joel and Hannaford, Blake. Inferring Environmental Interactions of Soft Everting Robots From Acoustic Signals *2023 IEEE International Conference on Soft Robotics (RoboSoft)* 2023

[163] Hwee, Joel and Lewis, Andrew and Raines, Allison and Hannaford, Blake. Kinematic Modeling of a Soft Everting Robot from Inflated Beam Theory *2023 IEEE International Conference on Soft Robotics (RoboSoft)* 2023

Abstracts or non-selective conferences

[1] P. Buttolo, J. Hewitt, R. Oboe, and B. Hannaford. Force feedback in virtual and shared environments. *Poster: IEEE Intl. conf. on System, Man and Cybernetics*, October 1995.

[2] J. Brown, J. Rosen, B. Hannaford, and M. Sinanan. A passive mechanical pantograph system for measuring tool position during minimally invasive surgery (poster). *BMES 2000, Biomedical Engineering Society, Annual Meeting. Annals of Bioengineering*, 28, Supplement 1, October 2000.

[3] J. Rosen, M. Solazzo, B. Hannaford, and M. Sinanan. Task decomposition of minimally invasive surgery for objective evaluation of laparoscopic surgical skills using hidden markov models. *Abstract: BMES 2000, Biomedical Engineering Society, Annual Meeting, Annals of Bioengineering*, 28, Supplement 1, October 2000.

[4] J.D. Brown, J. Rosen, J. Longnion, M. Sinanan, and B. Hannaford. Design and performance of a surgical tool tracking system for minimally invasive surgery. In *Abstract: Proceedings of the ASME International Mechanical Engineering Congress and Exposition: Advances in Bioengineering, BED*, volume 51, pages 169–170, New York, Nov. 11-16 2001. ASME.

[5] D. Wilson and B. Hannaford. Robust electronic design: What s that? In *Proc. Frontiers in Engineering Education*, Reno, NV, Oct 10-13 2001.

[6] G. Klute, J. Czerniecki, and B. Hannaford. ARTIFICIAL MUSCLES: ACTUATORS FOR LOWER LIMB PROSTHESES. In *Proceedings of the 2nd Annual Meeting of the VA Rehabilitation Research and Development Service*, page 107, Washington DC, February 20-22 2000.

[7] G. Borriello, T. Choudhury, B. Hannaford, N. Kern, and J. Lester. Choosing the right modalities and features for activity recognition. In *Neural Information Processing Systems 2004 Workshop on Multimodal Signal Processing*, Whistler, British Columbia, 2004.

[8] C. Doarn, K. Hufford, T. Low, J. Rosen, and B. Hannaford. Roundtable discussion: Telesurgery and robotics. *Telemedicine and e-Health*, 13(4), 2007.

Books, Chapters, and Editing

[1] B. Hannaford and A. Okamura. Haptics. In B. Siciliano and O. Khatib, editors, *Springer Handbook of Robotics*. Springer, Berlin, Heidelberg, 2nd edition, 2016.

[2] B. Hannaford, P. Buttolo, and H. King. Multi-finger haptic displays for characterization of hand response. In R. Balasubramanian and V.J. Santos, editors, *The Human Hand: A Source of Inspiration for Robotic Hand: Springer Tracts in Advanced Robotics (STAR) series,*, volume 95, pages 363–388. Springer, Heidelberg., 2014.

[3] J. Rosen, J. Brown, S. De, B. Hannaford,'Chapter 24 Macro and Micro Soft Tissue Biomechanics and Tissue Damage: Application in Surgical Robotics ,' In "Surgical Robotics: Systems Applications and Visions", pp. 583-618, Springer, Berlin, Heidelberg, 2011.

[4] J. Rosen, M. Lum, M. Sinanan, B. Hannaford, 'Chapter 8: Raven: Developing a Surgical Robot from a Concept to a Transatlantic Teleoperation Experiment ,' In "Surgical Robotics: Systems Applications and Visions", pp. 159-197, Springer, Berlin, Heidelberg, 2011.

[5] L.N.Sekhar, D, Ramanathan, J. Rosen, L.J. Kim, D. Friedman, D. Glozman, K. Moe, T. Lendvay, B. Hannaford, 'Chapter 30 Robotics in Neurosurgery ,' In "Surgical Robotics: Systems Applications and Visions", pp. 723-742, Springer, Berlin, Heidelberg, 2011.

[6] J. Rosen, B. Hannaford, R. Satava Editors, Surgical Robotics, Systems, Applications, and Visions Springer Verlag, 2011.

[7] B. Hannaford and R. Leuschke rendering for Multifinger Haptic Devices In M. Lin and M. A. Otaduy, editors, *Haptic Rendering, Foundations, Algorithms, and Applications.* A.K. Peters, Co. Wellesley, MA, 2008

[8] B. Hannaford and A. Okamura. Haptics. In B. Siciliano and O. Khatib, editors, *Springer Handbook of Robotics (Winner of two 2008 PROSE awards from the Association of American Publishers.).* Springer, Berlin, Heidelberg, 2008.

[9] M. Moreyra, P.H. Marbot, S. Venema, and B. Hannaford. A 5-axis mini direct drive robot for time delayed teleoperation. In V. Graefe, editor, *Intelligent Robots and Systems 1994*, pages 445–462. Elsevier Science, 1995.

[10] B. Hannaford. Telerobotics. In D. Hemmendinger and A. Ralston, editors, *Encyclopedia of Computer Science.* McMillan, 4th edition, August 2000.

[11] B. Hannaford. Feeling is believing: Haptics and telerobotics technology. In J.K. Goldberg, editor, *The Robot in the Garden, Telerobotics and Telepistomology on the Internet.* MIT Press, Cambridge, MA, 1999.

[12] S.C. Venema and B. Hannaford. Telerobotic remote handling of protein crystals via an internet link. In Ken Goldberg and Roland Siegwart, editors, *Beyond Webcams, An Introduction to Online Robots.* MIT Press, Cambridge, MA, 2002.

[13] J.H. Ryu, D.S. Kwon, and B. Hannaford. Control of a flexible manipulator with noncollocated feedback: Time domain passivity approach. In Antonio Bicchi, Henrik I. Christensen, and Domenico Prattichizzo, editors, *Control Problems in Robotics*, volume 4, pages 121–134. Springer Tracts in Advanced Robotics Series, 2003.

[14] B. Hannaford, J.H. Ryu, and Y.S. Kim. Chapter 3 stable control of haptics. In Margaret L. McLaughlin, editor, *Touch in Virtual Environments*, pages 47–70. Prentice Hall PTR, IMSC Press Multimedia Series, 2001.

[15] Hannaford, B. and Buttolo, P. and King, H. (2014) Multi-finger Haptic Displays for Characterization of Hand Response. In: The Human Hand: A Source of Inspiration for Robotic Hand: Springer Tracts in Advanced Robotics (STAR) series,. Springer, Heidelberg., pp. 363-388.

Project Reports

[1] B. Hannaford, J.H. Ryu, D.S. Kwon, Y.S. Kim, and J.B. Song. Testing time domain passivity control of haptic enabled systems. *University of Washington Department of Electrical Engineering Technical Report number UWEETR-2002-0010*, 19-July- 2002.

[2] Blake Hannaford. Making distorted spheres for psychophysical experimentation. *University of Washington Electrical Engineering Technical Report University of Washington Electrical Engineering Department Technical Report*, 2009-0001, Rev April- 2009.

[3] Blake Hannaford, Diana Friedman, Hawkeye King, Mitch Lum, Jacob Rosen, and Ganesh Sankaranarayanan. Evaluation of RAVEN surgical telerobot during the NASA extreme environment mission operations (NEEMO) 12 mission. *University of Washington Electrical Engineering Department Technical Report*, 2009-0002, 6-Feb- 2009.

[4] Blake Hannaford and Jesse Dosher. Polishing and measuring distorted spheres for psychophysical experimentation. *University of Washington Electrical Engineering Department Technical Report*, 2009-0004, April 24 2009.

[5] Blake Hannaford and Sugandhan Venkatachalam. Characterization of test balls for psychophysical experiments. *University of Washington Electrical Engineering Department Technical Report*, 2009-0006, June 5 2009.

[6] Hawkeye King, Sina Nia Kosari, Blake Hannaford, and Ji Ma. Kinematic analysis of the Raven-II(tm) research surgical robot platform. *University of Washington Electrical Engineering Department Technical Report*, 2012-0006, June 29 2012.(Revised August 2016)

[7] Danying Hu, Yagnming Li, Mohammad Haghighipanah, and Blake Hannaford. RNA, the ROS node automator: A tool for ROS code generation. *University of Washington Electrical Engineering Department Technical Report*, 2015-0001.

[8] Dianmu Zhang and Blake Hannaford. Behavior trees as a representation for medical procedures. *ArXiv e-prints*, cs.RO(1711.05412), November 2017.

[9] Blake Hannaford, Danying Hu, Dianmu Zhang, and Yangming Li. Simulation results on selector adaptation in behavior trees. *ArXiv e-prints*, cs.RO(1606.09219), November 2017.

[10] Blake Hannaford. Behavior trees as a representation for medical procedures. *ArXiv e-prints*, cs.RO(1801.07864), January 2018.

[11] Blake Hannaford, R. Bly, I. Humphreys, M. Whipple, and Behavior Trees as a Representation for Medical Procedures. *ArXiv e-prints*, cs.HC(1808.08954), 27-Aug- 2018.

[12] Dianmu Zhang and Blake Hannaford. IKBT: solving closed-form inverse kinematics with behavior tree. *ArXiv e-prints*, (1711.05412), Mon, 13 Aug 2018 16:48:05 + 0200.

Miscellaneous

Clickable Link: ArXiv Pre-prints

Patents

Google Patents Search: Inventor: Blake Hannaford

[1] B. Hannaford. Method and Apparatus for Multiplexing Switch Signals *US Patent No. 4,884,070* issued 1989

[2] B. Hannaford and M.R. Moreyra and P.H. Marbot. Five axis direct-drive mini-robot having fifth actuator located at a non-adjacent joint *U.S. Patent 5,528,955* issued 1996

[3] P. Buttolo and B. Hannaford. Direct Drive Manipulator for pen-based force display *U.S. Patent 5,642,469* issued 1997

[4] R. Seubert and M.V. Olson and D. Meldrum and B. Hannaford and P. Wiktor and N.A. Friedman and D.B. Snow and R. Kraft. Precision small volume fluid processing apparatus *U.S. Patent 5,785,926* issued 1998

[5] S.C. Venema and E. Matthes and B. Hannaford. Flat Coil Actuator having Coil Embedded in Linkage *U.S. Patent 6,437,770* issued 2002

[6] B. Hannaford and J.H. Ryu. Time domain passivity control of haptic interfaces *U.S. Patent 7,027,965* issued 2006

[7] Diana C. W. Friedman and Blake Hannaford and Devin Karns and Aylin Z. Kim and Louis Kim and Thomas S. Lendvay and Kristen S. Moe and James S. Pridgeon and Jacob Rosen and Laligam Sekhar. Introducer device *US Patent 8,617,197* issued 2013

[8] R. Adams and Aaron Olwin and B. Hannaford. Gloved human-machine interface *US patent 9,104,271* issued 2015

[9] R. Bly and B. Hannaford. Soft tissue shield for trans-orbital surgery *US Patent 9,011,326* issued 2015

[10] Eugene Chen and Aylin Kim and Cang Lam and Blake Hannaford and Randall Bly. Surgical tissue protection sheath *US Patent 8,986,201* issued 2015

[11] B Hannaford. Image matching to augment reality *US Patent 9,001,252,* issued 2015

[12] L White and T Kowalweski and T.S. Lendvay and B. Hannaford. Motion and video capture for tracking and evaluating robotic surgery and associated systems and methods *US Patent 9,026,247* issued 2015

[13] B. Hannaford and E. Rephaeli and C-J Wang. Sensing and Avoiding Surgical Equipment *U.S. Patent 9,486,128* issued 2016

[14] Howard Chizeck and Fredrik Ryden and Sina Nia Kosari and Blake Hannaford and Nicklas Gustafsson and Hawkeye King. Methods and systems for haptic rendering and creating virtual fixtures from point clouds *US Patent 9,471,142* issued 2016

[15] Blake Hannaford and Louis Kim and Thomas Lendvay and Kris Moe and James Pridgeon and Jacob Rosen and Laligam Sekhar. Surgical cockpit comprising multisensory and multimodal interfaces for robotic surgery and methods related thereto *US Patent 9,474,580* issued 2016

[16] Kris Moe and Randall Bly and Blake Hannaford. Surgical instrument input device organization systems and associated methods *US Patent 9,498,194* issued 2016

[17] Blake Hannaford and Joelle Barral and Eden Rephaeli and Denise Ching and Vikram Bajaj. Heads-up displays for augmented reality network in a medical environment *US Patent 9,538,962* issued 2017

[18] J. Dosher and D.C.W. Friedman and D. Glozman and B. Hannaford and A.Z. Kim and L Kim and T.S. Lendvay and K.S. Moe and J.S. Pridgeon and J. Rosen and L. Sekhar. Surgical Device *US Patent 9,775,640* issued 2017

[19] Joelle K. Barral and Benjamin K. Yaffee and Eden Rephaeli and Chia-Jean Wang and Blake Hannaford. Controlled Dissection of Biological Tissue *US Patent 9,833,828* issued 2017

[20] Diana Friedman and Blake Hannaford and Devin Karns and Aylin Kim and Louis Kim and Thomas Lendvay and Kristen Moe and James Pridgeon and Jacob Rosen and Laligam Sekhar. Introducer Device *US Patent 9,622,828* issued 2017

[21] Blake Hannaford and Joelle Barral and Christine Ching and Vikram Bajaj. Heads-up displays for augmented reality network in a medical environment *US Patent 9,645,785B1* issued 2017

[22] B. Hannaford and E. Rephaeli and C-J Wang. Sensing and Avoiding Surgical Equipment *U.S. Patent 9,895,063* issued 2018

[23] Blake Hannaford and Eden Rephaeli and Joelle K. Barral and Chia-Jean Wang. Biophotonic Surgical Probe *US Patent 10,092,355* issued 2018

[24] Eugene Chen and Aylin Kim and Cang Lam and Blake Hannaford and Randall A Bly and Jeremy Ciporen and Kristen Moe and Louis Kim and Laligam Sekhar. Surgical tissue protection sheath *US Patent 10,470,647* issued 2019

[25] Blake Hannaford and Brian Otis. Device Method and System to provide accommdation during a stereoscopic display *US Patent 10,353,219 B1* issued 2019

[26] Joelle K. Barral and Blake Hannaford and Eden Rephaeli and Christine Denise Ching. Surgery Guidance System *US Patent 10,639,104* issued 2020

[27] Joëlle Karine Barral and Benjamin Kreil Yaffe and Eden Rephaeli and Chia-Jean Wang and Blake Hannaford. Controlled dissection of biological tissue *US Patent 10,624,663B1* issued 2020

US Published Patent Applications

APP. NO.	Title
20180206709	SURGICAL TISSUE PROTECTION SHEATH
20180055577	MOTION EXECUTION OF A ROBOTIC SYSTEM
20170340390	Computer-Assisted Osteocutaneous Free Flap Reconstruction
20170042409	SURGICAL TISSUE PROTECTION SHEATH
20160349844	Magnetic Attachment Mechanism for Multifinger Haptic Device
20160074123	Surgery Pathway Guidance And Boundary System
20160074123	Surgery Pathway Guidance And Boundary System
20150297309	Methods And Systems For Selecting Surgical Approaches
20150297295	INSTRUMENT ORGANIZATION SYSTEMS AND ASSOCIATED METHODS
20150186730	IMAGE MATCHING TO AUGMENT REALITY
20150157193	SURGICAL TISSUE PROTECTION SHEATH
20150025547	SURGICAL COCKPIT COMPRISING MULTISENSORY AND MULTIMODAL INTERFACE FOR ROBOTIC SURGERY AND METHODS RELATED THERETO
20140313172	SURGICAL INSTRUMENT INPUT DEVICE ORGANIZATION SYSTEMS AND ASSOCIATED METHODS
20140168073	Methods and Systems for Haptic Rendering and Creating Virtual Fixtures from Point Clouds
20140155910	Spherical Motion Mechanism
20140114338	INTRODUCER DEVICE
20130204092	SOFT TISSUE SHIELD FOR TRANS-ORBITAL SURGERY
20130190571	SURGICAL TISSUE PROTECTION SHEATH
20120253360	MOTION AND VIDEO CAPTURE FOR TRACKING AND EVALUATING ROBOTIC SURGERY AND ASSOCIATED SYSTEMS AND METHODS
20120203069	SURGICAL SHIELD FOR SOFT TISSUE PROTECTION
20110257672	INTRODUCER DEVICE
20110238079	Surgical Cockpit Comprising Multisensory and Multimodal Interfaces for Robotic Surgery and Methods Related Thereto
20110118551	COLLATERAL SOFT TISSUE PROTECTION SURGICAL DEVICE
20110118543	SURGICAL DEVICE
20110102605	IMAGE MATCHING TO AUGMENT REALITY
20110020779	SKILL EVALUATION USING SPHERICAL MOTION MECHANISM
20070172803	SKILL EVALUATION
20060243085	Spherical motion mechanism
20030184574	Touch screen interface with haptic feedback device
20020062177	Time domain passivity control of haptic interfaces

Media Coverage

- June 2016, worked with IEEE PR firm on press release which reached 11M people in 228 publications.
- June 2016, Facebook Livestream in cooperation with IEEE which was viewed by over 37,000 people.
- Established UW Biorobotics Lab Facebook Page to publicize work of all three BRL faculty and their students.

Provisional Patent Applications

Date	Comotion #	Title
07/01/13	45522	Provisional Application filed: METHODS AND SYSTEMS FOR HAPTIC RENDERING ...
08/19/13	46606	Provisional Application filed: Accelerometer based dynamic gravity compensation
11/14/14	47100	"Semi-Autonomous Brain Tumor Ablation with Fluorescently Marked Tumor"
02/04/15	46499	Provisional Application filed: Endoscopic Surgery Pathway Guidance and Boundary System [IP: 46499.03US1]
05/26/15	47339	"U.S. Provisional Application filed: ""Magnetic Attachment Mechanism for Multifinger Haptic Device"" // [IP: 47339.01US1]"
05/17/16	47688	Provisional Application filed: Smart Surgical Navigation [IP: 47688.01US1]
05/12/16	47713	Computer Assisted Maxillary Reconstruction
02/04/16	47346	WO 2016/126934 Methods and Systems for Navigating a Surgical Pathway (YM Li Software)
5/19/17	47839	62/508,847 Drone system for utility line unfouling

Licenses

A license was completed in 2014 between UW and Applied Dexterity for the technologies associated with Raven-II
A license was signed with Simulab Inc. for electromechanical surgeon tracking technology and hidden Markov model based skill assessment technology for measurement of surgical skill in simulators and animal procedures. (2006). As of 2012 this product is now commercialized with the first 10 systems being delivered to customers in May2012.

Startup Companies

SPI Surgical Inc. SPI was formed with Jacob Rosen, 4 MD's, and entrepreneur Aylin Kim in 2009. Two invention disclosures in 2010 were transferred to startup SPI Surgical in 2012. SPI has won over $1M in SBIR/STTR funding.

CSATS Formed by Thomas Lendvay, M.D., and two of my Ph.D. students to commercialize crowd sourcing technolgies for surgical skill evaluation. Acquired by Ethicon, J&J 2018.

Applied Dexterity Inc. Applied Dexterity was formed in Dec. 2012 with Jacob Rosen and David Drajeske to commercialize the Raven Surgical Robotic Research Platform (`www.appliedexterity.com`. It has sold over 20 research surgical robotics systems.

Web Sites

- Biorobotics Lab Page (redesigned in 2010)

Other Scholarly Activity

Blogs and Media

July 27, 2017, "The Marriage of Artificial Intelligence and Patient Care," IEEE Transmitter Blog (`http://transmitter.ieee.org/marriage-artificial-intelligence-patient-care/`) (solicited by IEEE)

Invited Lectures and Seminars (Since 1999)

6-May-2022, Robotics Seminar, University of Wisconsin, Madison (via Zoom)
14-Oct-2020, Keynote Speaker, 2020 IEEE International Conference on Mechatronics and Automation, Beijing, China. (via Zoom)
Sept 30, 2020, Keynote Speaker, 10th Conference on New Technologies for Computer/Robot Assisted Surgery, Barcelona Spain (via Zoom)
July 23, 2020, Outreach event: Nationwide Slides and Q&A with tech interns, CodeLabs Online Expert Lunch, https://labs.codeday.org/.
July 2019, Plenary Speaker, Advances in Robotics (AIR 2019), 4th International Conference of The Robotics Society of India, IIT Madras, Chennai, India
October 2018, Invited Speaker, 1st International Forum on Engineering Education, Tsinghua University, "GIX: Global Innovation Exchange - Developing Leaders in Innovation", Beijing.
May 2018, Invited Keynote Speaker, "Modeling and Optimization for Mechanism Design in Robotic Surgery", SIMPAR 2018, Brisbane Australia.
Feb 2018, Invited panelist on Accountability for the Actions of Robots, Seattle University 2018 Law Review Symposium, "Singularity and The Law", Seattle Wa.
May 2017, Lead off speaker, Workshop on "Methods for Stability Analysis of Haptic Teleoperation Systems," International Automatic Control Conference (ACC), Seattle Wa.
April 2017, "Introducing Automation to Surgical Robotics: Where are we? and Who's in charge?", Mechanical Engineering Department Distinguished Lecture, Colorado School of Mines, Golden Co.
February 2017, "Introducing Automation to Surgical Robotics: Who's in charge?", Invited Keynote, Our_Futures conference, Quest University Canada, Squamish BC.
Sept 2016, "The Essential Interface Between Haptics Science And Haptics Technology", Invited Talk, Occulus Research, Redmond, WA.
July 2016, "The Essential Interface Between Haptics Science And Haptics Technology", Invited Keynote, Eurohaptics 2016, London.
May 2016, "Debate: Resolved, The cost of health care innovation is too high.", Debator, Simnovate 2016, McGill University, Montreal.
October 2015, "Augmented Reality in Surgical Robotics: A research perspective", Uppsala University department of Medical Informatics, Uppsala Sweden.
September 2015, "Augmented Reality in Surgical Robotics: A research perspective", USC/ Childrens Hospital of Los Angeles planning retreat, Palos Verdes, CA October 2014, "Raven II Platform for Collaborative Research in Surgical Robotics," Invited opening Talk, 7th KIST International Workshop on Micro Surgical Robotics, Korean Institute for Science and Technology, Seoul Korea.
August 2014, "Raven II Collaborative Research Platform for Surgical Robotics," Keynote, IEEE Intl. Conf. on Robots and Systems (IROS), Chicago, IL
August 2014, "Open source software framework for surgical robotics research," Summer School on Surgical Robotics, Carnegie Mellon University, Pittsburg, PA.
November 2013, "Raven II Research Surgical Robot Platform," IEEE Smart Tech: Metro Area Workshop Series, Seattle WA.
September 2013, "High stakes telerobotics: agumentating human skills in robotic surgery," Google X, Mountain View Ca.
April 2013, "History of Medical Robotics and Current UW Raven Research," Stanford Medical Robotics Seminar, Palo Alto, CA.
November 2012, "Raven II Research Surgical Robot Platform," Samsung Technology Forum, Suwon Korea.
March 2012, "Raven II Research Surgical Robot Platform," Qatar University Department of Mechanical Engineering Seminar, Doha Qatar.
January 2012, "Raven II Research Surgical Robot Platform," Yale University Department of Mechanical Engineering Seminar.
December 2011 "Raven II Research Surgical Robot Platform," National Cheng Kung University, Tainan, Taiwan.
November 2011 "Surgical Robotics and Teloperation" Psycholotron Theater Project, Seattle.

November 2011 “Teleoperation and Human Augmentation Technology,” Boeing Ergonomics Technology Forum, Boeing Research and Technology Division, Everett, Wa.
September 2011 “Telesurgery,” Summer School on Surgical Robotics, Montpellier France.
August 2011 “Raven-II Surgical Robot Research Platform,” Twente University of Technology, Twente, Netherlands.
June 2011, “Teleoperation Control in Surgical Robotics,” Dutch Institue of Systems and Control (DISC) Summer School on Dynamic Systems and Control, Leeuwenhorst, Netherlands.
August 2010, “Teleoperation Control in Surgical Robotics,” North American Summer School on Surgical Robotics, Seattle, WA (Organizer).
May 2010 “Surgical Robotics the last 20 years,” 50th Anniversary Keynote lecture, IEEE International Conference on Robotics and Automation, Anchorage, Ak,
Sept 09 “Haptics and Telesurgery,” Summer School on Surgical Robotics, Montpellier France.
May 09 “Telesurgery via the Internet,” Imperial College London.
April 09 “Biorobotics Research in Surgery,” Association of Health Care Journalists, UW Campus visit from Seattle National Meeting.
February 09, “When to stop? What is the limit of safe tissue manipulation in surgery?”, Bioengineering Department Seminar (BIOEN 509), University of Washington, Seattle.
January 09, “Telesurgery,” Johns Hopkins Winter School on Surgical Robotics, Baltimore Md.
September 08 “Markov Modeling of Errors,” American College of Surgeons (ACS) Postgraduate Course, “Exploring New Educational Opportunities Through the Consortium of ACS-accredited Education Institutes,” Seattle
August 08 “Surgery over the Internet,” National Taiwan University, Taiwan
August 08 “Surgery over the Internet,” National Central University, Taiwan
August 08 “Introduction to the Science and Technology of Haptics.” (40 contact hours). 1-Week Course for IT Faculty, Advanced Institute for Information Technology, Seoul, Korea.
April 08 “Surgery over the Internet,” Applied Physics Lab Seminar, Seattle WA.
March 08 “Surgery over the Internet,” GRASP lab seminar, University of Pensylvania.
February 08 “Open Source Software in Engineering Education,” DaNang University of Technology, DaNang Vietnam (16 lecture and workshop hrs).
Febuary 08 “Surgery over the Internet,” Robotics Institute Seminar, Carnegie Mellon University, Pittsburgh, PA.
November 07 “Mechanisms for Surgery via the Internet,” Invited Keynote Lecture, International Mechanical Engineering Conference and Exhibition, Seattle WA.
October 07 “Control of Tissue Damage,” Biomechanics Seminar, Dept of Mechanical Engineering, University of Washington.
Sept 07 “Surgery via the Internet,” Distinguished Lecture, Computer Science Department, Columbia University, New York.
Sept 07 “Surgical Telerobotics,” Summer School in Surgical Robotics, Montpellier France.
June 07 “Biorobotics: can robots restore the house call to the practice of medicine?,” Science on Tap, Seattle WA.
March 07 “Telesurgery Research Overview,” Intel Research, Seattle.
Jan. 07 “Telesurgery Research,” DOD (TATRC) sponsored panel, NextMed/MMVR 2007 Conference, Long Beach, CA.
Sept 06 “Multifinger Haptic Display Design I and II,” (3 hrs total) IEEE RAS Summer School in Haptics, Paris, France.
July 06 “Engineering Issues and Field Experience in Remote Surgery,” Dept. of Computing, Imperial College, London.
July 06 “Assessment of Damage and Appearance in Abdominal Organs,” Dept. of BioSurgery and Surgical Technology, Imperial College ,London.
Jan. 06 “Surgical Robotics: An Engineer’s Perspective,” DOD (TATRC) sponsored panel, NextMed/MMVR 2006 Conference, Long Beach, CA.

Nov. 05 “Saving Soldiers, Robots to the Rescue” (with Dr. Mika Sinanan). University of Washington College of Engineering/Alumni Association Lecture Series, ”Engineering the Unexpected”, covered by UWTV. 15-Nov-2005.
Oct. 05 “Science at the Movies,” University of Washington Department of Chemistry Outreach Lecture, “Actuator Technology in I-Robot”. 24-Oct-2005.
Mar. 05 Dept. of Surgery and Bioengineering, Imperial College London. 21-Mar-2005.
Mar. 05 IMT Lucca Institute for Advanced Studies, Lucca Italy. 18-Mar-2005.
Jan. 05 DOD (TATRC) sponsored panel “Are Haptics Really Necessary”, NextMed 2005 Conference, Long Beach, CA January 2005.
Nov 04 Industrial and Operations Engineering Departmental Seminar, University of Michigan
Oct. 04 Keynote Speaker, IEEE Industrial Applications Society 39th Annual Meeting, 5-Oct-2004, Seattle.
Sep. 04 Faculty Member. Society for Laparoscopic Surgeons 13th International Congress and Endo Expo SLS Annual Meeting, September 29-October 2, 2004. New York. Multidisciplinary Plenary Session and Future Technology Session.
Sep. 04 Invited Participant. US Army Medical Research Command (TATRC) workshop on Surgical Robotics, Marina del Rey, California.
Aug. 04 Invited Plenary Talk, International Conference on Control, Automation, and Systems, Bangkok, Thailand.
Aug. 04 Invited Seminar, Samsung Advanced Institute of Technology (SAIT), Seoul Korea.
Aug. 04 Invited Seminar, Korean Advanced Institute of Technology (KAIST), Daejon Korea.
Feb. 04 Robotics, Controls and Mechatronics Colloquium, University of Washington College of Engineering.
Feb. 04 Departmental Seminar: Department of Electrical Engineering and Computer Science, Case Western Reserve University.
Jan. 04 Distinguished Lecture: Department of Computer Science, University of Southern California.
Dec. 03 Intuitive Surgical Inc. Sunnyvale, CA.
Sept. 03 Invited Instructor: European Summer School on Surgical Robotics, University of Montpellier, France.
May 03 Invited Participant: DARPA Workshop on the Operating Room of the Future, Arlington VA.
Apr. 03 Kendal Retirement Community Seminar, Oberlin OH.
Jan. 03 Puget Sound MENSA Society, Mercer Island, WA.
Nov. 02 Mechanical Engineering Department Seminar, Johns Hopkins University
Oct. 02 Biomechanics Seminar, University of Washington Dept. of Mechanical Engineering.
Sept 02 Control Seminar, University of Michigan, Dept. of Mechanical Engineering.
Sept 02 Graduate Research Seminar, Purdue University, Department of EECS.
Aug. 02 Computer Motion Inc., Goleta, CA.
July 02 International Symposium on Experimental Robotics, ISER-02, Isola-di-Ischia, Italy, July 8-12, 2002.
June 02 Invited Lecture, University of Pisa, Pisa Italy.
June 02 Invited Lecture, University of Verona, Verona Italy.
May. 02 University of Washington Academic Medical Center Development Council, “Institute for Advanced Surgical Technology”.
Apr. 02 Grand Rounds, University of Washington, Department of Surgery.
Sept. 01 Invited Visitor, Human-friendly Welfare Robot Systems Engineering Research Center, Korean Advanced Institute of Science and Technology, Daejon, Korea.
Sept. 00 Distinguished Visitor, Samsung R&D Center, Seoul Korea.
Apr. 00 Workshop Speaker: ”Personal Robots in Education,” IEEE Intl. Conference on Robotics and Automation, San Francisco, CA.
Aug. 99 Invited participant, UW-Microsoft Research summer institute on Ubiquitous Computing. Blaine Washington.

Professional Society Memberships

IEEE Robotics and Automation Society (IEEE Life Fellow), AAAS.

Professional Society Service

Program Committee Member, Robotics Science and Systems (RSS) 2017
Plenary Speaker and Member, Best Demo Award Committee, World Haptics Congress, London 2016
Awards Committee, IEEE Robotics and Automation Society, 2012
Fellows Nomination Committee, IEEE Robotics and Automation Society, 2010, 2011
Program Committee, Associate Editor, 2010-2012 IEEE International Conference on Robotics and Automation.
Program Committee, 2010 North American Haptics Symposium, March 2010
Program Committee, Robotics Science and Systems (RSS) 2009, Seattle WA.
Conference Advisory Board, BioRob 2008, Phoenix, AZ.
Program Committee, 2008 Haptics Symposium, Reno.
co-Guest Editor: Special Issue on Biorobotics, IEEE Transactions on Robotics. 2007.
Steering Committee Member, World Haptics Congress, Pisa 2005, Tsukuba 2007, Salt Lake City, 2009
Co-Chair Technical Committee on Biorobotics, IEEE Robotics and Automation Society 2006.
Program Committee, Biorob 2006, Pisa February 2006.
General Chair, International Conference on Advanced Robotics (ICAR), Seattle 2005
Program Co-Chair, Annual Haptics Symposium. 3 year term May 2002-April 2005., 1yr extension through 2006. (http://www.hapticssymposium.org). Los Angeles, March 2003, Chicago, March 2004, Arlington, VA March 2006. The Haptics Symposium is held in conjunction with the IEEE Virtual Reality Conference (VR2003, http://www.vr2003.org).
Founding Editor of "Haptics-e", the first peer-reviewed journal devoted to the interdisciplinary field of Haptics and also, one of the first electronic refereed journals in any of the fields of Engineering that I am involved in. The journal is technically co-sponsored by the IEEE Robotics and Automation Society.
Associate Editor, IEEE Transactions on Robotics and Automation, 8/92 - 9/97,
Associate Editor Annals of Biomedical Engineering, 6/92 - 6/97.

Refereeing and other activity.

Numerous journal and conference paper reviews averaging about 10-20 per year.

Graduate Students

Chaired Doctoral Degrees

Completed

(Career total 31 Ph.D. students: 22 Electrical Engineering, 6 Bioengineering, 3 Mechanical Engineering. 10 Female Ph.D. advises completed.)

- Shan Lin, "Vision-based Surgical Instrument Segmentation and Endoscopic Sinus Surgery Skill Assessment," Spring 2021, PostDoc with Prof. Michael Yip, UCSD.
- Dianmu Zhang, "Building Modular, Human-Interpretable AI Systems with Behavior Trees," Spring 2020, Microsoft AI.
- Yun Hsuan ('Melodie') Su, "Vision Based Surgical Tool Tracking and Force Estimation with Robot Kinematics Prior," Spring 2020, Accepted position: Assistant Professor of Computer Science, Mount Holyoke College.
- Kyle Lindgren, "Robust Vision-Aided Self-Localization of Mobile Robots," Spring 2020, US Army Research Lab.
- Miyasaka, Mune, "Mechanical and Lifetime Properties of Wire Rope Cables in Surgical Robotics," Mechanical Engineering, June 2017, Riverfield.com (Japan).

- Aghdasi, Nava, "Optimal Planning of Surgical Approaches in the Skull Base," Electrical Engineering June 2017, Meta Reality Labs Research, Redmond).
- Hu, Danying, "Semi-Automation in Image Guided Surgery," Electrical Engineering, June 2017, Magic Leap Inc.
- Haghighipanah, Mohammad, "Estimation of Position and External Force for a Cable Driven Surgical Robot," Electrical Engineering, June 2017, Machine Learning Engineer, Intel Corporation
- Lei ('Levi') Cheng, "Evaluation of liver tissue damage and grasp stability using finite element analysis," Mechanical Engineering, 6/2015, Echodyne Corp.
- Jiang, Iris, "Localization of Tactile Information in the Lower Limb," Bioengineering, 6/2015, SRI International.
- H. Hawkeye King, "Human-Machine Collaborative Telerobotics: Computer Assistance for Manually Controlled Telesurgery and Teleoperation", 3/2014, Saildrone Inc.
- Sina Nia Kosari (Joint with Howard Chizeck), "Haptic Vitual Fixtures for Robotic Surgery," Manager, Control Systems Group, Cruse Automation. 8/2013
- Lee White, "Quantitative Objective Assessment of Preoperative Warm-up for Robotic Surgery," (Bioengineering). Currently medical resident (Urology) at Stanford University. 6/2013
- Tim Kowalewski, "Real-time Quantitative Assessment of Surgical Skill," Assistant Professor, University of Minnesota Dept. of Mechanical Engineering. 5/2012. **NSF CAREER Award, July 2019**
- Diana W. Friedman, "Scaling Laws and Size Thresholds for Minimally Invasive Surgical Instruments," Intuitive Surgical, Sunnyvale CA. 6/2011.
- Phillip Roan "An Instrumented Surgical Tool for Local Ischemia Detection," 3/2011. Robert Bosch Research and Technology Center, Palo Alto, CA.
- Jonathan Lester (joint supervision with Gaetano Boriello), "Personal Sensing from Mobile Devices: The Feasibility of Mobile Devices for Diverse Applications," 2/2010, Senior Scientist, Microsoft.
- Mitchell Lum, "Quantitative Performance Assessment of Surgical Robot Systems: Telerobotic FLS" 8/2008. Intel Healthcare Division. (Co-Advised with Jacob Rosen).
- Smita De (Bio-E MD/PhD) "Acute Indicators of Injury at the Grasper-Tissue Interface in Minimally Invasive Surgery." 5/2008, Attending Urologist, The Cleveland Clinic.
- Ganesh Sankaranarayanan, Collaborative Haptic Environments over the Internet. 12/2007. Associate Professor, Department of Surgery, The University of Texas Southwestern Medical Center
- G. Lee, Low Power Haptic Effects. 6/2004. Assistant Professor, Electrical Engineering & Computer Science. Case Western University, Cleveland, Oh.
- J.D. Brown (Bioengineering, Whitaker Fellowship) - Biomechanics of surgery 10/03
  Now with Intuitive Surgical, Sunnyvale, CA.
- K. Jaax (Bioengineering, Whitaker Fellowship, Paul Allen Fellowship, MSTP MD/Ph.D. program) - Biorobotic Position Sensor based on the Artificial Muscle Spindle, 6/2001
  Vice President, Boston Scientific, Sylmar, CA.
- T. Maneewarn (Thai Gov't Fellowship) - Force Feedback of Kinematic Information in Teleoperation and Remote Control 1/2000
  Deputy Director of Research, Institute of Field Robotics, King Mongkut's University of Technology Thonburi
  Bangkok 10140 Thailand

- R. Adams - (Air Force Palace Knight Fellow) Optimal Design of Coupling Networks for Haptic Simulations, 6/1999
  Faculty Member, US Airforce Academy 2008-2010,
  Researcher, Barron Associates, President and CEO, Virtual Therapy Solutions, LLC 2010–
- G. Klute (Bioengineering) - Gaylord McKibben Artificial Muscle Actuators. 9/1999
  VA Rehab Engineering Research Center, Seattle.
- S.C. Venema - Haptic display and perception of surface discontinuities, 5/1999
  Associate Technical Fellow Boeing Phantom Works, Bellevue.
- C.P. Chou - Anthroform biorobotic arm. 5/1996
  Avanti Inc., San Jose California
- P. Buttolo- Force Displays for Virtual Env. 5/96
  Ford Research Labs, Dearborn MI.
- Dal Yeon Hwang (LG Corp. Fellowship) - Force Reflecting Teleoperation with Kinematic Redundancy. 12/95
  Full Professor, Korea Polytechnic University, Seoul Korea 12/95
- P.H. Marbot - Artificial Muscle Spindle 4/95
  MBA 1997, Director of Production Planning, Tosco Inc. Brussels Belgium.

Ph.D. Students in Progress (estimated completion)

- Nive Kalavakonda^{+*}, Summer 2024
- Yana Sosnokova^{+*}, Spring 2024
- Andrew Lewis (ME)$^{+*}$, Summer 2024
- Haonan Peng (ECE)$^{+*}$, Autumn 2024

  * = passed General Exam + = passed qualifying exam

Chaired Masters Degrees (23 career completed)

Completed (Thesis Option)

- Joel Hwee, "Modeling and Applications of Everting Vine Robots," (ME), June 2021.
- Andrew Lewis, "Dynamic Gravity Compensation for the Raven Surgical Robot," (ME), August 2013
- Jack Lindsay, "A Mechanical Amplifier for Haptic Feedback," (ME) June 2013
- Srikrishnan Ramdurai. "Non Linear State Estimation of a Multi Axis Surgical Robot" (ME), 2011
- Diana Friedman, "Kinematic and Dynamic Analysis of a Surgical Robot Positioning Arm," (ME thesis, Co-Advised with Jacob Rosen) 2008.
- Jonathan Lester, "Using Accelerometers to Determine if Two Devices are Carried by the Same Person". (co-advised with Gaetano Borriello) 6/04,
  UWEE Ph.D. program.
- Mitch Lum, "Kinematic Optimization of a 2-DOF Spherical Mechanism," Ph.D. Candidate in UWEE Ph.D. program.
- Bill Anderson, "Haptic Device Interface Design and Testing for Manipulations in Real and Virtual Environments," 12/2004. Founder, Novint Inc. Albuquerque, NM (Haptic Interface Startup Company).

- Jesse Dosher - Detection Thresholds and Performance Gains for Small Haptic Effects, 2/02 Research Engineer II, Biorobotics Lab.
- Jason Trujillo - Control of a Surgical Grasper with Force Feedback, 6/97
  Intel Corp., Albuquerque, NM.
- M. Moreyra (MSEE) - Advanced Force Sensor for Haptic Display, 8/96
  Founder and President of Haptic Technologies Inc.
- Hisato Takenaka - Hidden Markov Modeling of Violin Bowing, 12/95
  BDM Technologies, Tacoma WA.
- Nancy Greivell - Ferrofluidic Based Micro-Pump, 6/95
  Agilent Heartstream Division, Seattle.
- Frederik Boe - An Iterative Trajectory Shaping Algorithm based on Run-Time Results
  ABB Robotics & Arthur Anderson Consulting, Nice France. 12/94
- Darwei Kung - Hidden Markov Model with Explicit Duration and its Application to Robotic Task Segmentation 12/94
  USWest, Denver, Co.
- Steven Venema - Kalman Filter Based Calibration of Analog Encoder Signals 6/94
  UWEE Ph.D., Associate Technical Fellow, Boeing Phantom Works
- Manuel Moreyra (MSME) - Design of a Five Degree of Freedom Direct Drive Minirobot Using Disk Drive Actuators, 6/94
- D. Smith - A New Kinematic Index for Manipulator Motion 3/94
  Applied Physics Lab, Seattle.
- P. Bhatti - Single chip velocity processor for optical encoders. 9/93
  Assistant Professor, Georgia Tech, Jan-2007 —.
- M. Shoemaker - Neural control of the Anthroform Arm. 5/93
  Ph.D. UWEE 2000, Assistant Professor, Seattle Pacific University
- P. Braathen - "Sliding mode control for force-reflecting teleoperation," 3/93
  Norwegian Military
- A. Lawn (UW M.E.) - "Control methods for bi-lateral telemanipulation" 10/92
- Wei-Chi Wang, "A New Optical Microsensor for Mechanical Detection Using Scattering from a Micro-Pipette," 12/91
  Ph.D. UWEE (Sinclair Yee, Adviser), Research Assistant Professor, Dept of Mech. Engineering UW.
- Ching Ping Chou, "Dual Stable Point Model of Muscle Activation and Deactivation" 11/91
  (see Ph.D. Students)
- P.H. Marbot, "Mini Direct Drive Robot for Biomedical Applications"
  (see Ph.D. Students) 8/91

MS In Progress

- Vidur Vij, ME, 9/20 (Currently full time at Unity).

MS Non-Thesis Option Completed

- Lisa Oh, Bioelectronic Tissue Impedance Measurement integrated in the surgical tool. 6/09
- Andrew Redmond, Embedded Software for Multifinger Haptics. 3/08
- Ken Fodero, Embedded software for surgical robotics. 3/06
- Arash Aminpoor, Embedded System Design, 4/05
- Greg Darlington, " 'LilHelper Rehabilitation Positioning Device," (project report) 6/04
  Liposonix Inc.

Post Doctoral Students and Surgical Fellows

5 Engineering PostDocs completed. 6 surgical fellows jointly supervised with M. Sinanan MD and Thomas Lendvay, MD.

Completed

- Yangming Li
  Assistant Professor, Rochester Institute of Technology starting August 2018.
- Omar Aljanaideh, January 2017-December 2017. Control and modeling of non-linear friction dynamics. Now at Facebook.
- Randy Bly MD (Surgical Fellow on 12 month research grant to work in BRL) 2012-13 Now faculty member at UW in ENT / Childrens Hospital.
- Joel Perry (with Jacob Rosen) Powered exoskeleton for rehabilitation. 6/06 - 5/08. Now Project Manager at Tecnalia Research and Innovation, San Sebastian Spain.
- Rainer Leuschke, Sensors for high resolution multifinger haptics. 4/04 - 1/08. Now with University of Washington CREST Lab.
- Yoonsang Kim Ph.D., Stable Control and Novel applications of Haptic Interfaces.
  3/01 - 9/03. Associate Professor, School of Internet Media Engineering, Korea University of Technology and Education (KUT) Cheonan, Korea.
- Jee-Hwan Ryu Ph.D. (KAIST), Stable Control of Haptic Interfaces
  3/02-4/03. Associate Professor, Korea University of Technology.
- Dan Ferris, Ph.D. (U.C. Berkeley), Artificial Muscle actuators for rehabilitation.
  7/01-6/02. Associate Professor, Department of Movement Science, Division of Kinesiology, University of Michigan.
- Marco Solazzo MD, Marco Barecca MD, Lilly Chang MD, (joint with Mika Sinanan, Surgery) working on Surgical Robotics Project 7/98-6/02
  Lily Chang now Assistant Professor of Surgery, UW School of Medicine.
  Marco Solazzo and Marco Barecca, Private Surgical Practice.
- Jacob Rosen, Ph.D. (Tel Aviv University) working on DARPA-funded Surgical Force/Torque Signatures Project 7/97 - 9/02
  Professor, Dept. of Mechanical Engineering, U.C.L.A.
- Dmitry Oleynikov, MD, Surgical Robotics Project 00-01
  University of Nebraska Medical Center.

- Christina Richards, MD. (joint with Mika Sinanan, Surgery) DARPA-funded Surgical Force/Torque Signatures Project 7/97 - 9/99
  Private Surgical Practice.
- Mark MacFarlane, MD. (joint with Mika Sinanan, Surgery) DARPA-funded Surgical Force/Torque Signatures Project 7/97 - 6/98
  Private Surgical Practice, Tacoma Washington.

Undergraduate Research Mentoring

Roughly 10-20 Student credit hours per year.

Student Credit Hours

Quarter	SCH
W14	15
Au13	19
Su13	8
Sp13	19
W13	14
A12	23
Su12	3
Sp10	41
W10	18
A09	24
Sp09	36
W09	34

Selected Recent and Current Students

Name	qtrs	Project Title
Rachel Aina^{*,**,x}	Su09	Haptics of Activities of Daily Living
Brittany Redmond$^{*+**,x}$	Sp08-	Haptics of Activities of Daily Living
Kathy Lee^{x}	Sp08-W09	High Definition 3D display system
Mohammed Logman^{x}	A08-W09	Thermal modeling of motor coils
Radivoje Jovanovic^{+}	A06-S08	C-Arm Control Electronics
Lauren Potter^{**,x}	W06-Su06	Network testing for collaborative haptics
Clint Bland**	Sp05-Sp06	Safety Processor for Surgical Robot
Gyung Sun (Lisa) Oh$^{++,x}$	Su05-Sp06	Electronics for Haptic and Robotic Systems
Gina Donlin$^{++**,x}$	Sp05-Sp08	Electronics for Haptic and Robotic Systems
Liz Kurihara$^{+**,x}$	Sp04-A04	Thermal Actuator Measurements for Haptics
Ken Fodero**	Sp04	Embedded Systems for Haptic Control
Aaron Midkiff^{*x}	Sp03-Sp04	Surgical Telerobot Operations and Technology
Tim Kowalewski^{+**}†	Su02-Sp03	Hidden Markov Models for Surgical Performance
Jacques Le	W03	”
Fumihiko Nagahisa	W03-Sp03	”
Travis Morgan	W03-Sp03	USB-linked embedded microcontroller for surgical robotics.

* NSF REU; ** Co-author; + Mary Gates Award; † Current Ph.D. Student; x Woman or member of an underrepresented minority group.

Selected Success Stories

Gina Donlin (05-07) Gina started as a sophomore with little engineering knowledge. However she quietly became a key lab member by starting with the basics like soldering and board assembly. She made

key technical contributions to our surgical robot and was deemed an essential person to travel with us down to California for the HapSMRT wireless surgical teleoperation experiment in spring 2006. She designed her own experiments to evaluate methods of attaching the fingers to a haptic device and wrote up a paper on her own for the World Haptics Congress in Tsukuba, Japan (March 2007). She traveled to that conference and made excellent use of the experience making many contacts there. I heard many positive comments on her work from leading people in the field.

In Feb 2008, she presented a paper to about 200 international attendees at the highly selective, single track conference the North American Haptics Symposium, in Reno NV. She also supported a demonstration booth of her technology in which we performed over 100 demos. She spent 3 months in Spring 2009 at Scuola Superiore Santa Anna, Pisa/Pontadera Italy doing research.

Jeff Longnion (99-00) Starting with a loosely described idea, Jeff built an experimental apparatus that measured for the first time the effects of motor inertia and gearing friction on perception of stiffness through a haptic device. He then wrote and presented a conference paper [1] and presented it himself at the Medicine Meets Virtual Reality Conference. While all the UG researchers mentioned in this section have published papers, Jeff was exceptional in his autonomy in doing so. One colleague from Berkeley claimed it was the best paper he heard at the conference. This research was recognized by a Mary Gates award and Jeff will enroll in UW's highly selective Medical Scientist Training Program (MD/Ph.D.) in fall 2003.

Dan Klowden (97-99) Starting with a basic software demonstration in which users manipulate a haptic device and interact with simulated Lego blocks on the screen (while feeling the interaction forces between blocks), Dan totally revised the collision detection algorithms incorporating knowledge of the Lego block geometry and a linked list structure to dramatically speed the computation. While the original code could only display up to 4 blocks on the screen at a time Dan's code expanded this to hundreds (and still completed the calculations in the required 1 millisecond time interval). (Mary Gates Winner)

Mitch Lum (99-02) When Mitch began in the lab doing basic tasks such as cleaning and organizing our electronics benches and fabricating mockups from PVC pipe, he was often torn between his interest in the lab and his hobbies like RC-car racing. As his imagination increasingly caught fire, he began to make important engineering contributions in his senior year (he also won a Mary Gates stipend). Now he is a Ph.D. student on an Army-funded surgical robot design project and after just three quarters, he has completed material for a Master's Thesis and journal paper which breaks new ground in the theory of spherical mechanisms as well as producing a tool for kinematic optimization of both parallel and serial spherical mechanisms.

He won the Oustanding Graduate Research Assistant Award from the EE Department in Spring 2007. He is expected to complete his Ph.D.

Tim Kowalewski (01-03) Tim graduated in Spring 2003 after performing two simulaneous UG research projects at both ends of the theoretical/applied scale. In 2001 he began to work at Washingtons Human Interface Technology Lab with Suzanne Weghorst and Urologist Rob Sweet. Together they have created a simulator for the Trans Urethral Prostate Resection procedure which has garnered national attention and and industrial licensee. At the same time, he worked with Prof. Hannaford studying Hidden Markov Model - based software for tracking surgical progress and skill monitoring. Recently he graduated and is working about 80% time on HMM's in the JHU/ITR project. He visited JHU and presented his research in June of 2003. Tim was also a Mary Gates winner. In early 2006 we hired time as a staff engineer, and since September 2007 he has been a Ph.D. student in our lab.

[1] J. Longnion, J. Rosen, M. Sinanan, and B. Hannaford. *Effects of geared motor characteristics on tactile perception of tissue stiffness,* Studies in Health Technology and Informatics - Medicine Meets Virtual Reality, 81:286–292, Newport Beach, CA. January 2001.

Other Research Activities

Sponsored Research

Awards: (PI unless otherwise noted)
Completed

UW Graduate School Fund $7.5k 5/91-4/92
UW Graduate School Research Fund $10k 1/90-12/90
NSF Presidential Young Investigator $350k 9/90-9/95
ONR: "Anthroform Biorobotic Arm" $37k 5/91-4/92
ONR "Anthroform Biorobotic Arm" $255k 3/92 - 4/96
UW Royalty Research Fund $22k 2/93 - 1/94
Washington Technology Center, "High Bandwidth Force Display" $100k 7/93 - 12/94
Washington Technology Center, "Advanced Genome Automation" (D. Meldrum PI) $140k 7/93 - 6/95
NASA "Micro Telerobotics Experiment, Micro-Trex: Phase A" $60k 3/94 - 12/94
NSF: "Consumer Electronics Design Course" $100k 9/94 - 8/97
NASA Johnson Space Center, "Force Display for EVA Training" $45k 5/95 - 9/95
UW Libraries Allen Innovation Award $7.5k 9/95-6/96 "Haptic Interface to Databases"
Boeing Defense and Space Company $68k 10/95 - 4/96 "Protein Crystal Growth Cell"
Boeing Information and Support Services $16k 1/96 - 6/96 "Advanced Force Sensor for Haptic Display"
ONR / United Research Inc. STTR: "Improved Dynamic Response of McKibben Artificial Muscle Actuators," $50k 9/96 - 4/97
Boeing Information and Support Services $86k 8/96 - 12/96 "3-D Haptic Display Device Design and Test"
Boeing Defense and Space Company, "Telerobotic Protein Crystal Mounting System" $20K 8/96 - 12/96
DARPA, "Force/Torque Signatures in Minimally Invasive Surgery," $500k 7/97 - 6/98
Ford Research Labs (gift), "Haptic Interfaces for Body Panel Shape Perception," $135k 1/97 - 12/99
VA Rehab Engineering Center (w/ Seattle VA), "Technologies for Powered Above-Knee Prostheses," $375k 10/97 - 9/01
Boeing Defense and Space Company, "Telescience User Interfaces" $100k 4/97 - 12/97
Washington Tech. Center, "Intelligent Control of cooking appliances" (J. Vagners PI, w/ Lang Manufacturing) $60k 7/97 - 6/99
National Science Foundation, "Computing Appliances, A Context for Integrating Research and Education," Gaetano Borriello, P.I. $490k 10/98-9/01
National Science Foundation, "Low Power Haptic Interfaces", Dissertation Enhancement project for Jesse Dosher, (3 month research visit to PERCRO lab, Scuola Superiore Santa Anna, Pisa Italy) $23k 8/01 - 7/02.
National Science Foundation, "MEMS Technology for Low Power Haptic Interfaces," Dissertation Enhancement project for Greg Lee, (3 month research visit to ARTS lab, Scuola Superiore Santa Anna, Pisa Italy) $23k 8/01 - 7/02.
Ford Motor Company, "Education and Research in Transportation Infotronics," $750k 6/98 - 5/04

Rockefeller Brothers Fund, Charles E. Culpepper Biomedical Pilot Initiative Grant, "Exploration of Opportunities in Telemedicine for Surgery: Access for Rural Areas,".
$24.8k 1/03 - 12/03.

Washington Research Foundation, "Advanced Surgical Technology,"
$200k 7/01 - 12/03

Intel Seattle Research Lab, "Embedded Computing, Sensing, and Pattern Recognition in Health Care and Rehabilitation,"
$29k, 1/03 - 3/05.

Boeing Company Phantom Works, "Collaborative Haptics,"
$60k, 1/04 - 12/04,

National Science Foundation, "Hidden Markov Models of Surgical Procedures," (Subcontract on NSF ITR award to Johns Hopkins University).
$85k 4/01 - 9/05.

Boeing Company Phantom Works, "Collaborative Haptics,"
$60k. 1/05 - 12/05,

Samsung Advanced Institute of Technology, "Human Performance for Low Power Hand Held Haptic Devices," 12/03 - 11/05, $130k direct costs (gift).

National Science Foundation, " IIS-0303750 Exploratory Procedures in Multi-Finger Haptic Display,"
$200k 5/01 - 5/05 (extended to 5/06).

TATRC via U. of Cincinnati "HAPSMRT Telerobotic Surgery Demo"
$60k 2/06-7/06

US Army Medical Research Acquisition and Materiel Command, "Robotic Mechanism for Military Telesurgery in the Battlefield,"
$1.2M 5/02-4/06 (extended to 3/15/07)

DARPA (via TATRC/U.S. Army) "Traumapod Phase I" **J. Rosen P.I.**
$600k 3/05 - 9/07 ($350k Supplement, 6/06)

US Army TATRC "Hidden Markov Model evaluation of simulator data" **J. Rosen P.I.**
$200k 10/05-9/07(?)

US Army TATRC via U. of Cincinnati "NEEMO-12 Telerobotic Surgery Demo"
$35k 3/07-5/07

US Army TATRC, "Control of Teleoperated Surgery with Time Delay", Howard Chizeck, Co-I.
$150k 8/06-10/07.

NSF, "Research Experience for Undergraduates Supplement,"
$18k, 6/1/2008–5/31/2009.

NSF, "Research Experience for Undergraduates Supplement,"
$12k, 6/1/2009–5/31/2010.

NSF, "IIS-0713028 HCC: Multi-Finger Haptics for Learning, Visualization, and the Arts,"
$450k 6/07-5/10.

US Army TATRC (STTR via SPI surgical) "Surgical Cockpit for advanced surgical technologies," **(J. Rosen P.I.)**
$30k (UW Portion) 9/2009-10/2010

Coulter Foundation (via UW Bioengineering), "Animal Testing of a multisensing surgical tool,"
$50k, 6/1/2009 – 10/1/2009

Washington Technology Center & Simulab Inc., "Improved Machine Learning Methods for Surgical Performance Measurement,"
$120k 7/1/09-6/31/10

US Army TATRC (STTR via SPI surgical) "Roboscope - Minimally invasive surgical system for neurosurgery through natural orfices,"
$30k (UW Portion) 9/2009-2/2010 No Cost Extension to June 2010

UW Technology Gap Innovation Fund (TGIF), "Engineering robustness of the multisensing surgical tool,"
$50k, 7/1/2009– 6/31/2010

NSF, "CPS Small: Control of Surgical Robots, Network Layer to Tissue Contact,"
$550k 10/2009-9/2012

NSF, "II-NEW: A Network of Open Testbeds for Surgical Robotics Research,"
$880k ($550k UW Portion) 4/1/2010—3/31/2012.

Washington Technology Center & Simulab Inc., "Improved Machine Learning Methods for Surgical Performance Measurement, Phase II,"
$135k 7/1/10—6/31/11

US Army TATRC (STTR via SPI surgical), "Surgome Surgical Skill Database" **Thomas Lendvay, P.I.**
$32.6k (UW Portion) 9/1/2010 — 8/31/2011

NSF (REU) "HCC: Multi-Finger High Fidelity Haptic Exploration."
$9.9k 5/10 — 7/31/10

US Army TATRC (STTR via SPI surgical) "Surgical Cockpit for advanced surgical technologies Phase II," **J. Rosen, P.I.**
$155k (UW Portion) 9/2010 — 4/2013

NASA (SBIR) via Barron Associates, "Vibrotactile Feedback for Space Suit Gloves. Phase II"
$150k (UW Portion) 10/11 — 6/13

Qatar National Research Foundation, "Flexible Imaging Probe for Surgical Robotics," **Wong Jong Yoon, Qatar University, P.I.**
$250k (UW Portion) 10/1/2010 — 9/31/2013

University of Central Florida/University of Western Ontario/University of Montpellier (France), "Raven Surgical Robot Research Platform,"
$950,000, 9/12-7/13, 5/22/12-5/21/15, 10/12-7/21/13

NSF ERC, via University of Washington, Computer Science
Hannaford CSNE 2014
$66,566 (UWEE portion), 12/16/13 – 12/15/15

Qatar University (QNRF)
Demonstration of Tactile Sensing System and Imaging Probe for Smart MIS Tool
$109,133, 4/2012 – 3/2015

University of Washington, Coulter Foundation
Computer Model for Advanced Pre-Operative Planning in Skull Base

$99,176, 11/2013 – 11/2014

National Institutes of Health
R21: Computer Modeled Multiportal Approaches to the Skull Base
$215,894, 9/2013 – 8/31/2015

American Academy of Otolaryngology
Computer Modeled Multiportal Approaches to the Skull Base
$9,735, 7/2013 – 6/2014

National Institutes of Health (R01), "Robotic Assisted Surgery with Tumor Paint", Eric Seibel, PI
$391,000 (UWEE portion), 9/2012 – 8/2016 (No cost extens ion through 9/17)

Korean Institute of Science and Technology (KIST)
Dr. Hujoon
$163,200 (year 1), 11/2013 – 10/2014 (total for 5 years $681,045, 11/2013-10/2018)

National Science Foundation, "NRI Large: Collaborative Research: Multilateral Manipulation by Human robot Collaborative Teams," Allison Okamura, Stanford, PI
$219,000 (UW portion), 12/2012 – 12/2016

Amazon Catalyst Program
Intelligent Robotic Assistant for Neurosurgery
$100,000, 3/2017 – 3/15/2018

Army Research Office
Tissue Characterization Cooperative Agreement
Robert M. Sweet, PI
$150,000 (approx UWBRL portion) 1/2017–12/2016 (renewal pending)
National Science Foundation, Award: 2025814
FW-HTF-P: Planning for the future of rural telerobotic surgical healthcare
PI:Stephen Seslar; Co-Principal Investigator:Blake Hannaford, Tadayoshi Kohno
$149,999, 10/2020 – 9/2021
National Science Foundation, National Robotics Initiative
NRI: Collaborative Research: Software Framework for Research in Semi-Autonomous Teleoperation
Peter Kazanzides JHU, PI.
$479,998 (UWEE portion), 10/2016– 9/2020 **Active:**

1. National Science Foundation, Award: 2036255
   SenSE: Smart Grasper for Intelligent Surgical Manipulation
   PI, Profs. Eli Schlizerman and Mika Sinanan, Co-I's
   $743,168, 9/2020 – 8/2023. (on a no-cost extension until 9/24).

2. Co-Motion Innovation Fund
   TPT-Finder: smart surgical instrument for Thyroid - Parathyroid descrimination
   PI.
   $50,000 1/1/24 – 10/1/24.

Pending:
TPT-Finder: smart surgical instrument for Thyroid - Parathyroid descrimination
NSF PFI-TT program
Submitted 2-Jan-2024
$ 550,000, 10/1/24 – 9/30/26

Unsponsored Research and projects with Fellowship Students

Current

Completed

"Low cost cricothyroidotomy simulator for developing countries," Team of undergraduates, graduates, and MD's. Seed funding from UWEE and Dept. of Global Health ($10k).
"Soft Tissue Biomechanics of Interal Organs Relevant to Abdominal Surgery," Ph.D. work of Jeff Brown (Bioengineering). Supported by a Whitaker Fellowship. 9/99-8/03.
"Force Feedback of Kinematic Information in Teleoperation and Remote Control," Ph.D. work of Thavida Maneewarn, supported by a Thai Government Fellowship. 6/96 - 12/98.
"Optimal Design of Coupling Networks for Haptic Simulations," Ph.D. work of Rick Adams, supported by an Air Force Fellowship. 9/96 - 6/99.
"Biorobotic Artificial Muscle Spindle," Ph.D. work of Kristen Jaax, supported by a Whitaker Foundation Fellowship, 6/96 - 6/99.

Documentation of Teaching Effectiveness

Courses Taught
(average of first 4 items) ECE 543 (PMP) Au21 Models of Robot Manipulatoin 4.3/4.2 (N=6/14)
ECE 474 Sp 21 Introduction to Embedded Systems 3.0/3.1 (N=10/62)
ECE 398 Sp21 Professional Issues in ECE 3.7//4.0 (N=17/69)
ECE 398 W21 Professional Issues in ECE 4.8/4.4 (N=9/46)
ECE 398 A20 Professional Issues in ECE 4.1/4.2 (N=11/40)
Re-factored course for asynchronus online delivery. Developed first material in the course on Diversity, Equity, Inclusion in Engineering.

EE 543B W 17 Models of Robot Manipulation 4.3/4.2 (N=22/39)
EE 543A (PMP) W 17 Models of Robot Manipulation 4.5/4.5 (N=10/23)
EE 447 A 17 Control Systems Analysis I 4.4/4.4 (N-35/80)
EE 398A Sp 17 Professional Issues in EE 4.8/4.7 (N=23/73)
EE 589A W 17 Haptic Enabled Systems 3.8/5.0 (N=12/16)
EE 447 A 16 Control Systems Analysis I 4.2/5.0 (N=63/67)
EE 543(PMP) Sp 16 Models of Robot Manipulation N=7
EE 543 W 16 Models of Robot Manipulation 4.1/5 (N=16/26)
EE 589 W 14 Haptic Enabled Systems 4.7/5 (N=11/12)
EE 447 A 13 Control Systems Analysis I 4.4/5 (N=35/79)
EE 546 Sp13 Models in Control and Robotics (PMP) 3.8/5 (N=17/27)
EE 543 W13 Models of Robot Manipulation 4.3/5 (N=21/28)
EE 447 Au12 Control System Analysis I 4.3/5 (N=41/78)
EE 546 Sp12 Models in Control and Robotics (PMP)
EE 447 Au11 Control System Analysis I 4.9/5 (N=21/63)
EE 546 Sp11 Models in Control and Robotics (PMP) 4.4/5 (N=24/28)
EE 543 W11 Models of Robot Manipulation 4.4/5 (N=24/28)
EE 447 A10 Control System Analysis I 4.7/5 (N=33/62)
EE 546 Sp10 Models in Control and Robotics (PMP) 4.5/5 (N=27/31)

EE 589 W10 Haptic Enabled Systems 3.9/5 (N=11/12)
EE 447 A09 Control Systems Analysis I 4.0/5 (N=36/59)
EE 332 S09 Devices and Circuits II 3.7/5 (N=13/34)
EE 543 W09 Models of Robot Manipulation 3.8/5 (N=8/11).
EE 472 A08 Embedded Microcomputer Systems 3.8/5 (N=20/31)
EE 472 A07 Embedded Microcomputer Systems 3.8/5 (N=22/30)
EE 472 W07 Embedded Microcomputer Systems 3.7/5 (N=33/40)
EE 472 A06 Embedded Microcomputer Systems 3.4/5 (n=21/30)
EE 449 S06 Control Systems Design 3.9/5 (n=10/27)
EE 543 W06 Models of Robot Manipulation 4.0/5 (n=11/16)
EE 472 A05 Embedded Microcomputer Systems 4.2/5 (n=24/25)
EE 332 S05 Devices and Circuits II 3.6/5 (n=40/67)
EE 589A W05 Haptic Enabled Systems 3.5/5 (n=7/15)
EE 472 A04 Embedded Microcomputer Systems 3.8/5 (n=21/31)
EE 332 S04 Devices and Circuits II 4.1/5 (n=29/65)
EE 472 A03 Embedded Micromputer Systems 4.1/5 (n=27/30)
EE 544 S03 Advanced Robot Manipulation 4.1/5 (n=7/7)
EE 543 W03 Models of Robot Manipulation 3.9/5 (n=13/18)
EE 472 A02 Embedded Microcomputer Systems 3.7/5 (n=30/38)
EE/AA449 S02 Control Systems Design 1.8/5 (n=10/13)
EE299b W02 The Secret Life of the Electron (coordinated a team of faculty) 4.1/5
EE472 A01 Embedded Microcomputer Systems 3.42/5 (n=32/38)
EE498 S01 Consumer Electronics Design (with D. Wilson) 3.75/5 (n=12/12)
EE400c W01 Consumer Electronics Design (with D. Wilson)
EE299b A00 The Secret Life of the Electron (coordinated a team of faculty) 3.69/5 (n=23/32)
EE498 S00 Consumer Electronics Design 2.89
release W00
EE498 A99 Consumer Electronics Design 3.625
EE498 S99 Consumer Electronics Des. N/A
release W99
EE498 A98 Consumer Electronics Des. 3.25/5 (n=17/24)
EE449 S97 Control Systems Design 4.17/5 (n=10/13)
EE546 W97 Industrial Automation Lab 3.4/5 (n=9/12)
EE498 A96 Consumer Electronics 4.0/5 (n=16/20)
EE544 S96 Adv. Robot Manip. 4.0/5 (n=9/15)
EE543 W96 Intro. Robot Manip. 4.5/5 (n=15/24)
EE498 A95 Consumer Electronics 3.3/5 (n=22/27)
EE544 S95 Adv. Robot Manip. 4.0/5.0(n=7/9)
EE543 W95 Intro. Robot Manip. 3.98/5.0 (n=13/23)
EE 498 A94 Consumer Electr. Des. 3.46/5.0 (n=12/15)
EE 544 S94 Advanced Robot Manip. 4.0/5.0 (n=14/15)
EE 543 W94 Intro. Robotic Manip. 4.0/5.0
- A94 Course Development: Consumer Electronics
EE 544 S93 Adv. Robotic Manipulation (unrated)
EE 235 W93 Linear Systems and Signals 2.9/5.0 (n=22/36)
EE 446 W93 Classical Control 3.41/5.0 (n=29/45)
EE 546 S92 Adv. Robotic Manipulation 4.31/5.0 (n=9/9)
EE 231 S92 Electric Circuits 3.99/5.0 (n= 37/70)
EE 546 W92 Intro. Robotic Manipulation 3.92/5.0 (n = 12/16)
EE 231 A91 Electric Circuits Unrated (n = 50)
EE546 S91 Adv. Robotic Manipulation 8th decile CofE
EE333 W91 Circuits & Systems 3.88/5.0 (n=100/120)

EE400a W91 Intro. Robotic Manipulation 4.27/5.0 (n=13/13)
EE333 A90 Circuits & Systems 3.93/5.0 (n=40/70)
EE446 W90 Control Systems unrated

Curriculum Innovation

Redesigned EE 472 embedded and development computing environment (Spring/Summer 2008). New embedded platform now allows TCP/IP networking, web services, and power managemement to be integrated into EE472.
Revised Control Engineering Capstone to increase design orientation (EE449) (Spring 2006).
Revised labs for EE448 (with Eric Klavins) (Sum 2005).
Revised (with J. Peckol and G. Zick) EE472, Embedded Computer Programming.
Developed "Industrial Automation Laboratory," (course number pending) a new course for Winter 97. This course exposed Engineering students to automation technologies widely practiced in industry but little studied in universities: PLC, CNC, and Robotic Assembly technologies.
EE498, "Consumer Electronics Design" (with Kelin Kuhn). Developed curricular materials and laboratory exercises. Wrote NSF grant application to ILI-LLD Program (Nov 93). NSF Grant funded 4/94 for $100k. Proposal received 6 reviews all of which checked "Excellent".
EE 543 and 544, "Introduction to Robot Manipulation," and "Advanced Robot Manipulation". These courses were developed and are now listed in the catalog. Typical enrollment in EE543 is 23 students. Received $100k ECSEL TRP funding to create a lab component to EE543 this lab component was later merged into the Industrial Automation Lab. Developed 3 robotics lab exercises for EE543, W96.

Service

Departmental Service

- Systems, Robotics, and Control Group Chair, AY20-21
- Chair EE Faculty Search Committee, 9/12-6/13
- Chair EE Computing Committee, 9/09 – 9/10
- EE Space Committee, 9/08 – 9/09
- Excel Search Committee 12/07 – 6/08
- EE Executive Committee 1/06 – 8/07
- EE Faculty Search Committee 3/05 – 5/05
- EE Development Committee. 9/04 – 8/05
- EE Promotion and Tenure Committee. 9/04 – 8/07
- Faculty Senator representing EE dept. 9/03 – 6/07
- Coordinator for Undergraduate Research, 9/02 –
- Chair, Faculty Search Committee, 9/01 - 6/02
- Associate Chair for Education, 7/99 - 6/01
- Chair, Faculty Search Committee, 9/98 - 6/99
- Member, Dept Research Committee, 9/98 - 6/99

- Chair, Instructional Resources Committee, 9/95 - 6/97
- Member of Departmental Advisory Committee, 9/93 - 8/96
- Chair of Controls & Robotics Group, 3/93 - 8/96
- Teaching Laboratory Strategic Planning Committee, 1/95 - 9/95
- Organized first quarter of Robotics Colloquium, 8/93 and Spring Quarter 1995
- EE Chair Search Committee. 3/93-5/93
- Core Curriculum Development Com. AY 89-90
- Dept. Strategic Planning Com. AY 90-91
- Dept. Resource Allocation Com. Sp. 91
- Sun Micro-systems gift coordinating committee. 3/92
- Extensive participation in recruitment of Deirdre Meldrum to the faculty. AY 91-92

College Service

- College of Engineering Strategic Planning Subcommittee on Technology Transfer and Innovation, AY 20-21.
- ECE representative to College Council AY20-21.
- Electrical Engineering Department Chair Search Committee, 3/07-6/07

University Service

- Faculty "FPLC" participant and leader. Coordinated faculty learning group on "flipping the classroom". Au & W 2013
- Testbed Leader, Center for Sensorimotor Neural Engineering (NSF ERC), 9/11 — 9/13
- Search Committee, Digital Arts program Faculty Position, 1/07-6/07.
- Ad hoc Committee supporting Mary Lidstrom in negotiating with Alfred E. Mann foundation for major gift to UW. 11/06 –
- Search Committee, Battelle Endowed Chair and Director of the Center for Technology Entrepreneurship , Business School. 4/03 – 7/03
- Review Committee, Center for Technology Entrepeneurship, Business School 1/03 – 3/03
- Leading ad-hoc strategic planning group of about 15 faculty. Result is a strategic plan for research in advanced surgical technologies which is being presented to donors in the Medical School's capital campaign. 5/02 –
- Royalty Research Fund Grant Review Committee 3/95 – 12/96

Community Service

- Panelist, Start-Up Pitch Event. Korean Ministry of SMEs and Startups (KSC) Seattle and Intuitive-X, online, 16-Aug-2021
- Judge, Seattle Innovation Startup Competition, hosted by Seattle Entrepreneurship Club. Nov, 2019
- Judge, Tsinghua Univ. / GIX Innovation competition, Aug 2018.
- Science Teaching in K-12 classroom, TOPS elementary/ (2 hrs per year) 98-2002

National Service

- NIH Study Section, SBIR/STRR Surgical Sciences, Biomedical Imaging and Bioengineering IRG, 2020-21 (3 times)
- NIH Study Section, SBIR/STRR Surgical Sciences, Biomedical Imaging and Bioengineering IRG, 2018, 2020 (2 times)
- Department of Energy, Visiting delegation member, reviewing robotics opportunities in Nuclear Waste Cleanup at Hanford Site, August 2015.
- NSF National Robotics Roadmaping sub-panel in Medical Robotics, 2012
- FDA Device Certification Panel Consultant - November 2002.
- FDA Device Certification Panel Consultant - October 2000.
- FDA Device Certification Panel Consultant - June 1999.
- NSF panels: 2007, May 2010

Other Service

- Conference Program Committee and Steering Committee, North American Haptics Symposium (even years), World Haptics Congress (odd years). 2007–
- Conference General Chair, organizing committee for International Conference on Advanced Robotics. ICAR-2005, Seattle WA. (about 200 attendees).
- Program Co-Chair, Haptics Symposium 2003-2006, currently affiliated with IEEE Virtual Reality Conference IEEE-VR2003.
- Conference Program Committee: ICAR-2003, Portugal, IEEE Intl. Conf. on Robotics and Automation, Alexandria VA, 2002, Leuven Belgium, May98. ICAR-97, Monterey, ASME Haptics Symposium, 11/97, First International Symposium on Medical Robotics and Computer Assisted Surgery, Pittsburgh, Sept. 1994.
- Conference Steering Committee: IEEE Workshop on Human Robot Communication, RO-MAN-94, 95, 96, Nagoya, July 94, etc.
- Video Proceedings Chair: Vrais-95, Raleigh NC, March 95.
- Advisory Committee: NSF Research Planning Workshop on Computer Assisted Surgery, March, 1993
- Video Proceedings and Tutorials Chair: VRAIS-93, First IEEE Conference on Virtual Reality Technology, Seattle, 1993.

- Invited Panelist: NSF workshop on Biosystems Analysis and Control Expansion, October 95, Japan Science Foundation 11th Science and Technology Forum, Kawasaki, 1/92, support from JSF. Talk: Kinesthetic Interface to Virtual Environments
- Invited Speaker and Panelist: IROS'91 (Intelligent Robots and Systems), Osaka, 11/91, Support from NSF and Toshiba. Talk: Hidden Markov Models for Manufacturing
- Conference Program Committee: ICAR 91 "International Conference on Advanced Robotics," Pisa Italy, June 1991. Track Chair: "Bio-robotics"
- Track Chair: "Biorobotics," IEEE EMBS Annual Intl. Conference, Nov., 1989, Seattle, Nov., 1990, Philadelphia, Nov 1993, San Diego.

Consulting

- DLA Piper, Expert witness in Patent litigation before the International Trade Commission, IMMR vs Apple. (2016-2017)
- Dorsey & Whitney, LLP. Expert witness on behalf of IEEE in copyright case, Kumar vs. IEEE. (2014-2016)
- Google-X. Advice on robotic surgery proof of concept project. (2013)
- Steptoe & Johnson, expert witness in International Trade Commission Investigation 337-TA-834, Immersion vs. Motorola Mobility, (2012)
- Orrick Herrington and Sutcliffe, LLC, expert witness in International Trade Commision Investigation 337-TA-743, Motiva vs. Nintendo. (2011)
- Intellectual Ventures, Inventing in selected technology areas different from my research. 2009,10
- Fogarty LLC (Law Firm) Advising on Patent Prosecution (2009/10)
- Howrey LLC (Law Firm) Advising on intellectual property. (Nov 2008)
- International Advisory Board, The Hamlyn Centre of Robotic Surgery, Imperial College London 4/2008 -
- McKool Smith LLC, expert Witness in patent case related to bioelectronics, 2005-2006
- Accor Technology Corp, Wenatchee WA. Automation. 2004
- Advisory Board, In-Touch Health Inc., Goleta, CA. 2002-2004
- Expert consultant to Patent Case involving haptic technology, Spring 2002.
- Interface Displays and Controls, Oceanside CA. Touch Screen Design, Spring 2002.
- Immersion Human Interface Corp., San Jose, CA. Consultation on haptic interface product design., 1997
- Expert witness in trade secrets case related to industrial automation, Autumn 96