UNITED STATES PATENT AND TRADEMARK OFFICE

BEFORE THE PATENT TRIAL AND APPEAL BOARD

APPLE INC.
Petitioner,

v.

RESONANT SYSTEMS, INC.,
Patent Owner.

Case No. IPR2024-00697
U.S. Patent No. 8,093,767

Case No. IPR2024-00698
U.S. Patent No. 8,093,767

Case No. IPR2024-00806
U.S. Patent No. 9,941,830

Case No. IPR2024-00807
U.S. Patent No. 8,860,337

EXPERT DECLARATION OF KEITH W. GOOSSEN, PH.D.

TABLE OF CONTENTS

I. BACKGROUND 1

II. MATERIALS CONSIDERED 2

III. SUMMARY OF OPINIONS 3

IV. EDUCATIONAL AND EMPLOYMENT BACKGROUND 3

V. LEVEL OF ORDINARY SKILL IN THE ART 5

VI. RELEVANT LEGAL STANDARDS 6

VII. BACKGROUND OF THE ’767, ’337, AND ’830 PATENTS 11

VIII. CLAIM CONSTRUCTION 21

A. ’767 Patent Terms 21

1. Preamble of Claim 1 21

2. “driving component” 22

3. “control component” 22

B. ’830 Patent Terms 23

1. “driving component” 23

2. “control component” 23

3. ’830 Patent Claims 4–6 27

C. ’337 Patent Terms 28

1. “driving component” 28

2. “control component” 29

IX. OBVIOUSNESS 32

A. ’767 IPRs (IPR2024-00697 and IPR2024-00698) 32

Resonant Systems, Inc., Ex. 2009
Sony Interactive Entertainment Inc., etc. v. Resonant Systems, Inc., IPR2024-00807

1. No Motivation to Combine the References in IPR2024-00697 (all grounds) 32

2. Failure to Satisfy [1.5.3] "a switch that receives a directional signal d from the processor" (IPR2024-00698, all claims and all grounds) 38

3. Failure to Satisfy Both [2.3] "a directional-signal splitter/inverter that generates two complementary internal signals d and $\overline{d}$" and [2.4] "two pairs of solid-state switches, a first switch of each pair controlled by internal signal d and a second switch of the pair controlled by internal signal $\overline{d}$" (Grounds 1B, 1C, and 2B of -00697 IPR and Grounds 1B, 1D, 2B of -00698 IPR).....42

4. Failure to Satisfy Either "Vibration Sensor" or "Continuously Monitors Output from the Vibration Sensor" in Claim 3 (Grounds 1B and 2B of -00697 IPR and Grounds 1B and 2B of -00698 IPR) 44

B. '830 IPR (IPR2024-00806).....46

1. Failure to Satisfy Both 1[c]/19[c]/20[c] "power supply" and 1[f]/19[f]/20[f] "control component" (all grounds) 46

2. Failure to Demonstrate Motivation to Modify Wakuda to satisfy [14] "flux paths comprising a paramagnetic material . . ." (Grounds 1B and 1E).....53

C. '337 IPR (IPR2024-00807).....60

1. Failure to Satisfy Both 2[c] "power supply" and 2[f] "control component" (Ground 1).....60

2. Failure to Satisfy Both 2[c] "power supply" and 2[f] "control component" (Ground 2).....65

3. Failure to Satisfy Both 2[c] "power supply" and 2[f] "control component" (Grounds 3A, 3B).....68

4. Failure to Satisfy Both 2[c] "power supply" and 2[f] "control component" (Ground 4A).....73

5. Failure to Satisfy Both 2[c] "power supply" and 2[f] "control component" (Ground 4B) 73

X. CONCLUSION 73

Resonant Systems, Inc., Ex. 2009
Sony Interactive Entertainment Inc., etc. v. Resonant Systems, Inc., IPR2024-00807

Resonant Systems, Inc., Ex. 2009
Sony Interactive Entertainment Inc., etc. v. Resonant Systems, Inc., IPR2024-00807

I. BACKGROUND

1. I have been retained as a technical expert by Patent Owner Resonant Systems, Inc. ("Patent Owner" or "Resonant Systems") in these proceedings. Resonant Systems has asked me to provide my expert opinions concerning certain technical aspects of vibration modules and associated technologies as they relate to the petitions filed by Petitioner Apple Inc. ("Petitioner" or "Apple") for inter partes review of U.S. Patent 8,093,767 ("'767 patent") in Case Nos. IPR2024-00697 and IPR2024-00698 ("-00697 IPR" and "-00698 IPR," and collectively the "'767 IPRs"), of U.S. Patent 9,941,830 ("'830 patent") in Case No. IPR2024-00806 ("'830 IPR"), and of U.S. Patent 8,860,337 ("'337 patent") in Case No. IPR2024-00807 ("'337 IPR"), and the accompanying Declarations of Dr. Blake Hannaford.

2. The '337 patent is a continuation-in-part of the '767 patent, and the '830 patent is a continuation of a continuation of the '337 patent. There is overlap in the specifications and in the limitations of the claims. The prior art and obviousness arguments overlap to differing degrees among the petitions. For convenience I therefore submit one declaration addressing all four of the IPRs. Unless I expressly state otherwise, any opinions that I offer concerning issues in one of the IPRs also applies to the corresponding issues in the other IPR.

3. The statements in this declaration summarize my opinions on these matters based on my over 35 years of experience in electrical engineering, electro-mechanical systems, and sensors, my education, knowledge, skills, and my review and analysis of the materials referenced herein.

4. I am being compensated for my work in this matter at the rate of $350 per hour. I am also being reimbursed for reasonable and customary expenses associated with my work and testimony in this investigation. My compensation is not contingent on the outcome of this matter or the substance of my testimony.

II. MATERIALS CONSIDERED

5. In the preparation of this declaration and the opinions contained herein, I have considered the petitions and other materials, as listed below:

- The patents 8,093,767, 8,860,337, and 9,941,830 (Ex. 1001 in each IPR)
- The petitions and accompanying exhibits in IPR2024-00697, IPR2024-00698, IPR2024-00806, and IPR2024-00807, including prior art references and the declarations of Dr. Blake Hannaford
- The deposition transcripts of Dr. Hannaford (Exs. 2011–2013)
- The CRC Handbook of Chemistry and Physics, 52nd Edition (Ex. 2014)
- A description of the bending of magnetic field lines as they enter materials having different magnetic permeabilities can be found at https://phys.libretexts.org/Bookshelves/Electricity_and_Magnetism/Electromagnetics_and_Applications_(Staelin)/02%3A_Introduction_to_Electrodynamics/2.06%3A_Boundary_conditions_for_electromagnetic_fields. (Ex. 2015)
- The article "Quality Factor (Q)" available at https://ccrma.stanford.edu/~jos/fp/Quality_Factor_Q.html. (Ex. 2016)
- The Texas Instruments reference design document by John Caldwell, titled "Analog Pulse Width Modulation." (Ex. 2017)

Resonant Systems, Inc., Ex. 2009
Sony Interactive Entertainment Inc., etc. v. Resonant Systems, Inc., IPR2024-00807

III. SUMMARY OF OPINIONS

6. As set forth in detail below, I disagree that Apple has successfully shown that any of the challenged patent claims of the ’767, ’337, or ’830 patents is obvious, either because Apple has failed to establish that the proposed combination or modification would satisfy the claims under their proper constructions, or because Apple has failed to properly demonstrate the art to be combined is analogous and to demonstrate a motivation to make the combination or modification in question.

IV. EDUCATIONAL AND EMPLOYMENT BACKGROUND

7. Attached as Exhibit 2010 is my CV. I summarize in this section my educational background, career history, publications, and other relevant qualifications. My qualifications can be found in my curriculum vitae, including details about my employment history, fields of expertise, and publications.

8. I became an Associate Professor in Electrical and Computer Engineering at the University of Delaware in 2002 and in 2018 was promoted to Professor. I oversee the Optoelectronic Packaging and Integration laboratory at the University of Delaware. I am also the Director of the Mid-Atlantic Industrial Assessment Center, an award-winning center for research and development of energy systems and energy efficiency. The Center has won the 2012 U.S. Department of Energy Best Center award, and the 2015 U.S. Department of Energy Excellence in Applied Energy Engineering Research award.

9. I have served on professional committees including the IEEE Conference on Micro Electro Mechanical Systems and IEEE Optical Interconnect conferences. I am a Senior Member of the Institute of Electrical and Electronic Engineers (IEEE).

Resonant Systems, Inc., Ex. 2009
Sony Interactive Entertainment Inc., etc. v. Resonant Systems, Inc., IPR2024-00807

10. I earned a B.S. in Electrical Engineering from the University of California at Santa Barbara (1983) and an M.A. in Electrical Engineering from Princeton University (1985). I received my Ph.D. from Princeton University in 1988, and worked at Bell Labs from 1988 until founding Aralight, Inc. in September, 2000. I performed research at Bell Labs in MEMS-based (Micro-Electro-Mechanical Systems-based) optical switches, much of which forms the basis of today's wavelength selective switches.

11. In September of 2000, I co-founded Aralight, Inc, where I was involved in the company's raising of $10 million in capital and the growth of the company to 35 people. The company's product, an integrated optoelectronic fiber-optic transmit/receive module—showing 3x the bandwidth of previous such products—was based upon my inventions and followed on my research at Bell Labs. Aralight was later sold and its product forms the basis of today's Active Optical Cabling, which enables high-speed optical backplanes for switches and supercomputers.

12. I am the inventor (or co-inventor) on 87 issued U.S. patents. I have over 300 published papers and conference proceedings.

13. My qualifications include teaching electromagnetics and electric power systems, which address the same physics of haptic devices in that they involve converting electrical energy to mechanical energy. In electric power systems and haptic devices, currents and/or voltages are used to produce electric or magnetic forces on masses in order to cause their rotary or linear motion. For electric motors, vibration is considered a loss mechanism and not optimized. In haptics, essentially, the vibration loss mechanism is what is desired to be optimized.

Resonant Systems, Inc., Ex. 2009
Sony Interactive Entertainment Inc., etc. v. Resonant Systems, Inc., IPR2024-00807

14. A specific qualification is my invention of the Mechanical Anti-Reflection Switch, or MARS device. This is a Micro-Electromechanical System, or MEMS device, designed to produce digital movement in response to a data input. It was instrumental in early testing of various fiber optic systems, and to this date I believe holds the record for the fastest controlled mechanical device ever produced at 10 Mbits/second.

V. LEVEL OF ORDINARY SKILL IN THE ART

15. It is my opinion that a POSITA at the time of the invention would have had (1) a bachelor's degree in electrical engineering, mechanical engineering, or a comparable field of study, and (2) at least two years of professional experience with electro-mechanical control systems, or other similarly relevant industry experience. Additional relevant industry experience may compensate for lack of formal education or vice versa. I qualified as a POSITA as of the earliest claimed priority date of the '767, '337, and '830 patents, in May 2009. I also understand the capabilities of a POSITA at the relevant time because I was working with and providing technical direction to others with similar levels of training and experience during that period.

16. I note that Petitioners offer a similar level of ordinary skill in the art in their petitions for the '767 IPRs:

> a degree in mechanical engineering, electrical engineering, physics, or a related technical field, and at least 2-3 years of experience related to the design or development of systems incorporating linear actuators; additional years of experience could substitute for the advanced-level degree[1]

[1] IPR2024-00697 Petition at 4; IPR2024-00698 Petition at 4.

Resonant Systems, Inc., Ex. 2009
Sony Interactive Entertainment Inc., etc. v. Resonant Systems, Inc., IPR2024-00807

Petitioners do not appear to propose a level of ordinary skill in the ’337 IPR or the ’830 IPR. The meaning of this proposed level of ordinary skill is unclear, in that the phrase after the semicolon refers to “the advanced-level degree,” but the phrase before the semicolon only mentioned “a degree.” I assume that the intended meaning is that a person might reach the proposed level of ordinary skill if they have an advanced-level degree such as a master’s degree or Ph.D., but less than 2-3 years of experience.

17. Based upon my experience as a Ph.D. electrical engineer, industry researcher, company co-founder, and university teacher and researcher, I also qualified as a POSITA and understand the capabilities of a POSITA under either my definition or Petitioner’s definition of the level of ordinary skill in the art. In particular, the Mechanical Anti-Reflection Switch MEMS device that I invented and worked on was a linear-motion device. My opinions herein would not change if the Board were to adopt either of the proposed definitions for the level of ordinary skill.

18. In this declaration, I offer opinions from the perspective of a POSITA having ordinary skill in May 2009. I note that the continuation-in-part application leading to the ’337 patent was filed on January 6, 2012.[2] My opinions in this declaration would not change if offered from the perspective of a POSITA having ordinary skill in January 2012.

VI. RELEVANT LEGAL STANDARDS

19. I have been informed of the legal standards for establishing patent invalidity in inter partes review proceedings before the Patent Trial and Appeal Board.

[2] ’337 Patent at 1.

Resonant Systems, Inc., Ex. 2009
Sony Interactive Entertainment Inc., etc. v. Resonant Systems, Inc., IPR2024-00807

20. I understand that the petitioner must prove invalidity of a patent claim by a preponderance of the evidence, that is, the evidence must be sufficient to show that a fact or legal conclusion is more likely than not.

21. I understand that a claim may be anticipated if (1) the claimed invention was patented, described in a printed publication, or in public use, on sale, or otherwise available to the public before the effective filing date of the claimed invention; or (2) the claimed invention was described in a patent or published application, in which the patent or application names another inventor and was effectively filed before the effective filing date of the claimed invention.

22. I understand that, once the claims of a patent have been properly construed, the next step in determining anticipation of a patent claim requires a comparison of the properly construed claim language to the prior art on a limitation-by-limitation basis.

23. I understand that even if a patent claim is not anticipated, it may still be invalid if the differences between the claimed subject matter and the prior art are such that the subject matter as a whole would have been obvious at the time the invention was made to a person of ordinary skill in the pertinent art.

24. I also understand that a patent may be rendered obvious based on an alleged prior art reference or a combination of such references plus what a person of ordinary skill in the art would understand based on his or her knowledge and the references. It is also my understanding that in assessing the obviousness of claimed subject matter one should evaluate obviousness over the prior art from the perspective of one of ordinary skill in the art at the time the invention was made (and not from the perspective of either a layman or a genius in that art).

Resonant Systems, Inc., Ex. 2009
Sony Interactive Entertainment Inc., etc. v. Resonant Systems, Inc., IPR2024-00807

25. I understand that a patent claim composed of several elements is not proved obvious merely by demonstrating that each of its elements was known in the prior art. There must be a reason for combining the elements in the manner claimed. That is, there must be a showing that a person of ordinary skill in the art at the time of the invention would have thought of either combining two or more references or modifying a reference to achieve the claimed invention.

26. I understand that an obviousness determination includes the consideration of the following factors: (1) the scope and content of the prior art, (2) the differences between the prior art and the claims at issue, (3) the level of ordinary skill in the art, and (4) objective evidence of nonobviousness.

27. I understand that prior art references are applicable to the obviousness inquiry only when they are analogous to the claims being challenged. To be considered analogous art, the prior art must either (1) be from the same field of endeavor, regardless of the problem addressed, or (2) if not within the field of the inventor's endeavor, be reasonably pertinent to the particular problem with which the inventor is involved.

28. I understand that the burden is on the petitioner to explain how specific references could be combined, which combinations of elements in specific references would yield a predictable result, and how any specific combination would operate or read on the claims. I further understand that the petitioner cannot rely on conclusory statements but must instead provide a reasoned explanation supported by evidence. I also understand that obviousness does not exist where the prior art discourages or teaches away from the claimed invention. I also understand that even if a reference does not teach away, its statements

Resonant Systems, Inc., Ex. 2009
Sony Interactive Entertainment Inc., etc. v. Resonant Systems, Inc., IPR2024-00807

regarding preferences are relevant to a finding whether a person skilled in the art would be motivated to combine that reference with another reference.

29. I understand that it is impermissible to use hindsight to arrive at the claimed invention. My understanding is that the inventor's own path never leads to a conclusion of obviousness. I also understand that, when assessing whether there was a motivation to combine references to teach a claim element, defining the problem in terms of its solution reveals improper hindsight.

30. I understand that a proper determination of the validity of patent claims can only be done after the claims have been properly construed. I understand that a claim construction inquiry begins and ends with the actual words of the claim. Apart from the written description and the prosecution history, the claims themselves provide substantial guidance as to the meaning of particular terms. I further understand that the context in which a term is used in the asserted claim can be highly instructive. The patent specification can also shed light on the meaning of claim terms.

31. I understand that, when conducting a claim construction inquiry, courts are not required to construe every limitation present in a patent's asserted claims. I further understand that where a term is used in accordance with its plain meaning, the court should not re-characterize it using different language.

32. I understand that there is a "heavy presumption" that claim terms carry their full ordinary and customary meaning unless the accused infringer can show that the patentee expressly relinquished claim scope. The ordinary and customary meaning of a claim term is the meaning that the term would have to a POSITA at the time of the invention.

Resonant Systems, Inc., Ex. 2009
Sony Interactive Entertainment Inc., etc. v. Resonant Systems, Inc., IPR2024-00807

33. I understand that courts generally do not import limitations into claims from examples or embodiments appearing only in a patent's written description, even when a specification describes very specific embodiments of the invention or even only a single embodiment. Similarly, I understand that statements during patent prosecution do not limit the claims unless the statement is a clear and unambiguous disavowal of claim scope.

34. I understand that, under 35 U.S.C. § 112 ¶ 6, "[a]n element in a claim for a combination may be expressed as a means or step for performing a specified function without the recital of structure, material, or acts in support thereof, and such claim shall be construed to cover the corresponding structure, material, or acts described in the specification and equivalents thereof." 35 U.S.C. § 112 ¶ 6. I understand that the standard for determining whether § 112 ¶ 6 applies is whether the words of the claim are understood by persons of ordinary skill in the art to have a sufficiently definite meaning as the name for structure. Where a claim term lacks the word "means," there is a presumption that § 112 ¶ 6 does not apply. To rebut this presumption, the challenger must demonstrate that the claim term fails to recite sufficiently definite structure or else recites function without reciting sufficient structure for performing that function. I understand this presumption cannot be overcome without showing that the claim limitation is devoid of anything that can be construed as a structure. I further understand that if § 112 ¶ 6 does apply, then the corresponding structure should not be limited to the structure described for a single embodiment in the specification if the patentee has disclosed multiple embodiments.

35. I understand that when a claim is subject to § 112 ¶ 6 and it recites basic processor functions, the specification need not disclose corresponding algorithms because a standard microprocessor can provide sufficient structure for functions that can be achieved by any

Resonant Systems, Inc., Ex. 2009
Sony Interactive Entertainment Inc., etc. v. Resonant Systems, Inc., IPR2024-00807

general purpose computer without special programming. If special programming is required to perform the claimed function, I understand that a corresponding algorithm can be expressed in the patent in any understandable terms, including as a mathematical formula, in prose, as a flow chart, or in any other manner that provides sufficient structure. I further understand that, if a corresponding algorithm is required, steps that are not necessary to perform the claimed function must be omitted from the algorithm because the algorithm must only include what is necessary and nothing more.

36. I understand that a typographical error in a patent claim can be corrected by the Board during claim construction, as long as the correction is not subject to reasonable debate based on the claim language and specification, and as long as the prosecution history does not suggest a different interpretation of the claim.

VII. BACKGROUND OF THE '767, '337, AND '830 PATENTS

37. The '767, '337, and '830 patents generally relate to haptic devices, which can be roughly described as electro-mechanical devices that vibrate in response to an input (such as touching a touch screen). Such devices are commonplace today as a human interface feedback, for example informing the human that they have correctly made an input. A haptic device can be generalized as having an electrical driving force, either an electric or magnetic field, causing a weight or mass to move, usually in an oscillatory fashion. The movement of the mass can roughly be generalized as rotary or linear. The movement of the mass is connected either mechanically or electro-mechanically to a housing, which is connected in some way to whatever surface the human touches, and thus the vibration caused by the oscillatory movement is transmitted to the human.

Resonant Systems, Inc., Ex. 2009
Sony Interactive Entertainment Inc., etc. v. Resonant Systems, Inc., IPR2024-00807

38. While a more technological table of haptic devices is given below, a high level overview of electromechanical devices in general is:

movement / force	rotary	linear
magnetic	electric motor	loudspeaker
electric	rotary actuators	piezoelectric

39. One can see that both electric and magnetic fields can produce both rotary and linear movement, although, magnetic devices can be generally larger and produce more mechanical power, which is inherent in that electric field requires shorter distances to generate large forces.

40. Before going forward it is useful to connect the use of the terms, electric and magnetic fields, to the driving voltages and currents, and the resulting forces. Electric actuation is easy to understand, as a voltage across two plates produces an electric field in the same direction as the voltage (perpendicular to the plates), and a charged object between the plates will experience a force in the same direction as the electric field.

41. Magnetic actuation is a bit more difficult as the vectors of the fields and both the driving currents (alternating voltages can be used to produce magnetic fields, but it is less common), and the magnetic forces, are at right angles to the magnetic fields.

42. For example, by Ampere's Law, a current-carrying wire will produce a circular magnetic field with its axis being the wire:

Resonant Systems, Inc., Ex. 2009
Sony Interactive Entertainment Inc., etc. v. Resonant Systems, Inc., IPR2024-00807

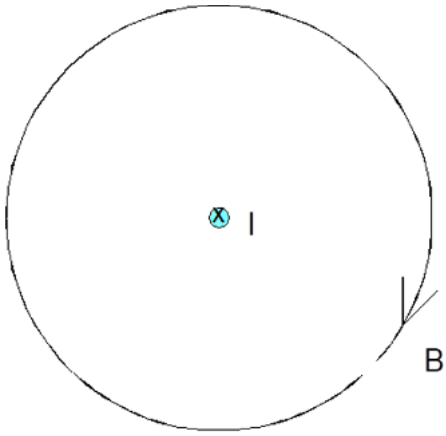

43. Here the current-carrying wire is perpendicular to the page and the current is directed into the page. If a current-carrying coil is formed, the direction of the magnetic field can be determined by adding up the contributions of all the wires in the coil:

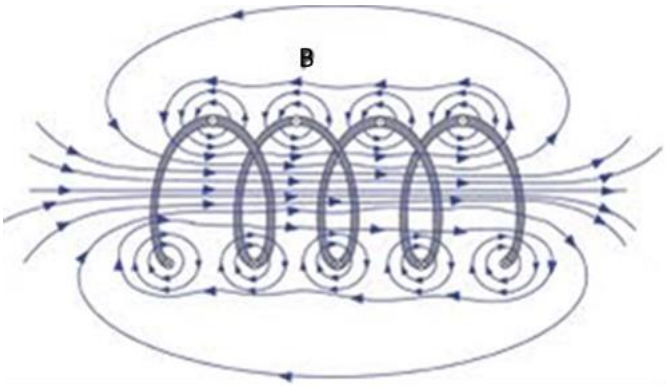

44. One sees that by considering that the effect of every point on the wire in the coil, causing a circular magnetic field around it, and adding those effects, the resulting overall magnetic field can be determined. As can be seen, as the coil is more tightly wound (sometimes then called a solenoid), the magnetic field becomes concentrated within the coil, in a direction along the axis of the coil:

Resonant Systems, Inc., Ex. 2009
Sony Interactive Entertainment Inc., etc. v. Resonant Systems, Inc., IPR2024-00807

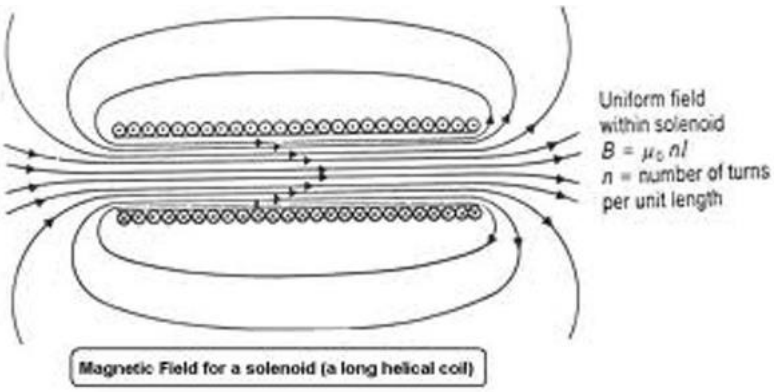

45. Now we get to the forces resulting from the magnetic field. If the object in the magnetic field is itself a magnet, this is easy, the force is in the same direction as the magnetic field. The way to understand this is that a magnet is essentially itself a "coil," containing electrons rotating in the same circular direction, resulting in a magnetic field. And, we all know that opposite poles attract:

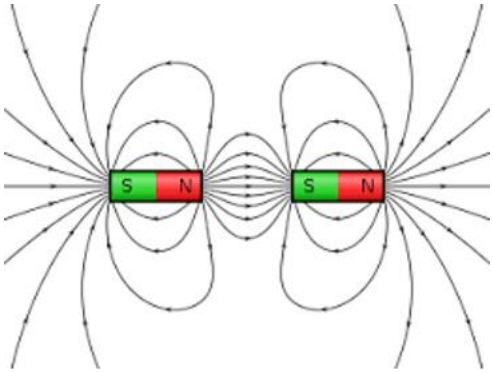

46. One sees that the two magnets behave essentially like two solenoids producing magnetic fields in the same directions along their axes. Thus, in the above drawing, you could replace one of the magnets with the solenoid of the previous drawing, and have the same attractive forces occurring.

47. The basis of the forces between two magnets, or between a magnet and a solenoid, or between two solenoids for that matter, must be found by considering the forces on the currents embedded in each, which are circular about their axes. A magnetic field only

Resonant Systems, Inc., Ex. 2009
Sony Interactive Entertainment Inc., etc. v. Resonant Systems, Inc., IPR2024-00807

produces a force on a moving charge, or current, and that force is at right angles to both the magnetic field and the current. In the above drawing of the two magnets, the force on the left magnet is to the right. The "currents" in the left magnet are like that in the solenoid earlier pictured. The force is at right angles to both. To understand the overall force one must consider the entire coil, and that's hard. A simple principle that helps us understand the overall effect is that like currents attract:

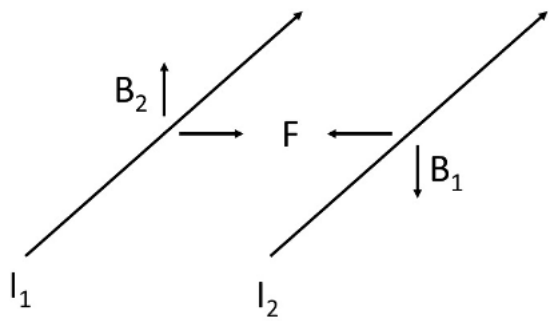

48. Thus, the two attracting "solenoids" in the magnet drawing have all their "currents" in the same direction, and thus they all attract. For the same reason two magnets with their poles in the same direction will attract.

49. The discussions and petitions here also involve the characterization of the magnetic property of materials, and the resulting bending and concentration of magnetic field lines in magnetic materials. For example a common use of magnetic materials is concentration and conveyance of magnetic field lines using a ferromagnetic bar[3]:

[3] Ex. 2015, "Why do ferromagnetic materials channel magnetic field lines?," at https://physics.stackexchange.com/questions/129782/why-do-ferromagnetic-materials-channel-magnetic-field-lines.

Resonant Systems, Inc., Ex. 2009
Sony Interactive Entertainment Inc., etc. v. Resonant Systems, Inc., IPR2024-00807

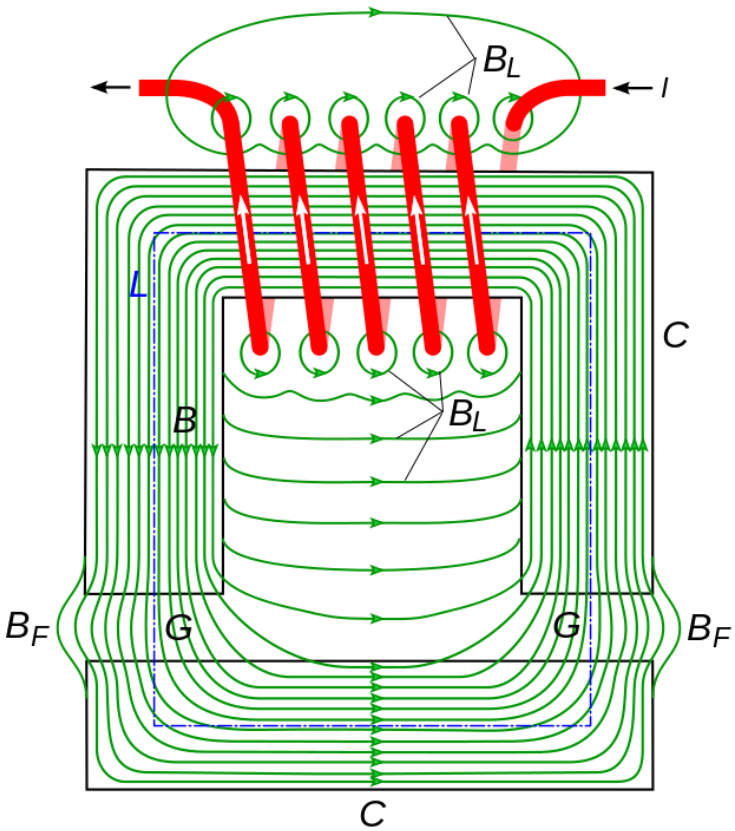

50. The bending of magnetic field lines as they enter materials of different magnetic properties is discussed at https://phys.libretexts.org/Bookshelves/Electricity_and_Magnetism/Electromagnetics_and_Applications_(Staelin)/02%3A_Introduction_to_Electrodynamics/2.06%3A_Boundary_conditions_for_electromagnetic_fields:

Resonant Systems, Inc., Ex. 2009
Sony Interactive Entertainment Inc., etc. v. Resonant Systems, Inc., IPR2024-00807

$$H_{2\perp} = B_{2\perp}/\mu_2 = B_{1\perp}/\mu_2 = \mu_1 H_{1\perp}/\mu_2$$

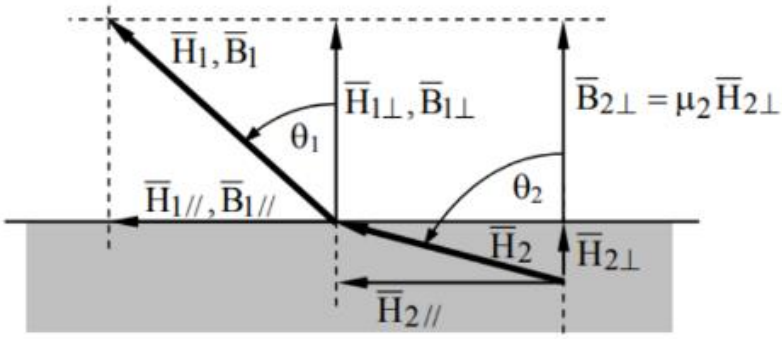

Figure 2.6.3: Static magnetic field directions at a boundary.

$$\theta_2 = \tan^{-1}\left(\left|\vec{H}_{2//}\right|/H_{2\perp}\right) = \tan^{-1}\left(\mu_2\left|\vec{H}_{1//}\right|/\mu_1 H_{1\perp}\right) = \tan^{-1}[(\mu_2/\mu_1)\tan\theta_1]$$

The bending of the lines is determined by the materials permeability, μ; the greater the permeability, the greater the bending and concentration of the magnetic field lines.

51. Materials are characterized magnetically based on the value of their permeability relative to that of vacuum (μ_r):

Diagmagnetic: $_{mr}$<1, repels magnetic field lines

Paramagnetic: μ_r slightly > 1, weakly bends and concentrates lines

Ferromagnetic: μ_r much > 1, strongly bends and concentrates

An example of a paramagnetic material referred to in the case is aluminum. Aluminum has a permeability μ_r=1.000022.[4] Thus while "magnetic" in the sense that its relative permeability is greater than 1, it would have an effect nearly indistinguishable from air.

52. Now that the basic electro-physics has been explained, the forced movement of any magnet or charge due to any current or voltage can be determined.

[4] https://en.wikipedia.org/wiki/Permeability_(electromagnetism); see further discussion and calculation XI.B.2 below.

Resonant Systems, Inc., Ex. 2009
Sony Interactive Entertainment Inc., etc. v. Resonant Systems, Inc., IPR2024-00807

53. As mentioned, haptic devices come in a variety of forced motions and electrical forces. This table summarizes the various types (from "Development of a Human-Display Interface with Vibrotactile Feedback for Real-World Assistive Applications," in Sensors, 2021):

Table 1

Comparison of actuators and needed characteristics for haptic feedback.

Characteristics / Actuators	Voice Coil Motor	Eccentric Rotating Mass Motor	Linear Resonant Actuator	Piezoelectric Actuator	Electrostatic Tactile Actuator
Response time	High	Low	High	High	High
Bandwidth	High	Low	Low	High	High
Displacement output	High	High	Medium	Medium	Low
Power consumption	Low	Low	Low	High	High
Mechanical simplicity	Medium	Low	High	Medium	Medium

54. The main types of haptic generators in human interfaces such as touch screens, such as on smartphones, are Eccentric Rotating Mass Motor (ERMM) and Linear Resonant Actuator (LRA) devices. ERMMs are basically unbalanced motors that when rotating thus produce a vibration. LRAs are the subject of these IPRs and are devices that cause reciprocating linear motion of some mass, resulting in vibration. One sees that the LRA is superior in various respects to the ERMM, and thus have largely taken over as the technology of choice in haptic generators. The inventors of the '767, '337, and '830 patents understood these advantages, which led them to the claimed inventions, as reflected in the exemplary description below from the '830 patent (2:15-3:25):

Resonant Systems, Inc., Ex. 2009
Sony Interactive Entertainment Inc., etc. v. Resonant Systems, Inc., IPR2024-00807

While effective in producing vibrations, there are many problems associated with the unbalanced-electric-motor vibration-generating units, such as that shown in FIG. 1A, commonly used in the various devices, systems, and applications discussed above. First, unbalancing the shaft of an electric motor not only produces useful vibrations that can be harnessed for various applications, but also produces destructive, unbalanced forces within the motor that contribute to rapid deterioration of motor parts. Enormous care and effort is undertaken to precisely balance rotating parts of motors, vehicles, and other types of machinery, and the consequences of unbalanced rotating parts are well known to anyone familiar with automobiles, machine tools, and other such devices and systems. The useful lifetimes of many devices and appliances, particularly hand-held devices and appliances, that employ unbalanced electric motors for generating vibrations may range from a few tens of hours to a few thousands of hours of use, after which the vibrational amplitude produced by the devices declines precipitously as the electric motor and other parts deteriorate.

A second problem with unbalanced electric motors is that they are relatively inefficient at producing vibrational motion. A far greater amount of power is consumed by an unbalanced electrical motor to produce a given vibrational force than the theoretical minimum power required to produce the given vibrational force. As a result, many hand-held devices that employ unbalanced electric motors for generating vibrations quickly consume batteries during use.

A third problem with unbalanced electric motors, discussed above, is that they generally produce elliptical vibrational modes. Although such modes may be useful in particular applications, many applications can better use a linear oscillation, with greater directional concentration of vibrational forces. Linear oscillation cannot generally be produced by unbalanced electric motors.

Resonant Systems, Inc., Ex. 2009
Sony Interactive Entertainment Inc., etc. v. Resonant Systems, Inc., IPR2024-00807

A fourth, and perhaps most fundamental, problem associated with using unbalanced electric motors to generate vibrations is that only a very limited portion of the total vibrational-force/frequency space is accessible to unbalanced electric motors. FIG. 3 shows a graph of vibrational force with respect to frequency for various types of unbalanced electric motors. The graph is shown as a continuous hypothetical curve, although, of course, actual data would be discrete. As shown in FIG. 3, for relatively low-power electric motors used in hand-held appliances, only a fairly narrow range of frequencies centered about 80 Hz (302 in FIG. 3) generate a significant vibrational force. Moreover, the vibrational force is relatively modest. The bulk of energy consumed by an unbalanced electric motor is used to spin the shaft and unbalanced weight and to overcome frictional and inertial forces within the motor. Only a relatively small portion of the consumed energy is translated into desired vibrational forces.

Because of the above-discussed disadvantages with the commonly employed unbalanced-electric-motor vibration-generation units, designers, manufacturers, and, ultimately, users of a wide variety of different vibration-based devices, appliances, and systems continue to seek more efficient and capable vibration-generating units for incorporation into many consumer appliances, devices, and systems.

SUMMARY

The current application is directed to various types of linear vibrational modules, including linear-resonant vibration modules, that can be incorporated in a wide variety of appliances, devices, and systems to provide vibrational forces. The vibrational forces are produced by linear oscillation of a weight or member, in turn produced by rapidly alternating the polarity of one or more driving electromagnets. Feedback control is used to maintain the vibrational frequency of linear-resonant vibration module at or near the

Resonant Systems, Inc., Ex. 2009
Sony Interactive Entertainment Inc., etc. v. Resonant Systems, Inc., IPR2024-00807

> resonant frequency for the linear-resonant vibration module. Both linear vibration modules and linear-resonant vibration modules can be designed to produce vibrational amplitude/frequency combinations throughout a large region of amplitude/frequency space.

55. Thus in an LRA (referred to in certain asserted patents as a "LRVM," or Linear Resonance Vibration Module), a mass is moved in a linear reciprocating fashion within a housing, with the main embodiment being by wrapping the housing with a solenoid like coil, that produces a magnetic field within the housing, like described above. This magnetic field produces a force on a magnet in the housing, and when the coil is driven with an alternating current, the magnet first is force one way than the other, and thus oscillates, producing a vibration.

56. Further background on the claimed inventions is provided in the specification of each patent, especially the portions referenced in my analyses below.

VIII. CLAIM CONSTRUCTION

A. '767 Patent Terms

1. Preamble of Claim 1

57. In its institution decisions for each of the '767 IPRs, the Board determined, for the purposes of institution, that the preamble of '767 patent claim 1 is limiting.[5] The parties had agreed to that construction in their related district court litigation.[6] To the extent relevant to this declaration, I have assumed that the preamble of '767 patent claim 1 is limiting.

[5] IPR2024-00697, Paper 9 at 10; IPR2024-00698, Paper 9 at 10.
[6] IPR2024-00697, Ex. 3001 at 10; IPR2024-00698, Ex. 3001 at 10.

Resonant Systems, Inc., Ex. 2009
Sony Interactive Entertainment Inc., etc. v. Resonant Systems, Inc., IPR2024-00807

2. "driving component"

58. In its institution decisions for each of the '767 IPRs, the Board determined, for the purposes of institution, that the term "driving component" is a means-plus-function term, with a function "drives the moveable component in each of two opposite directions" and a corresponding structure that includes "coils 420, 514, 626, 1202, 1204, 1302, 1304, 1412, 1414, 1510 (also shown in Figs. 16–17); electromagnets shown in Figs. 10–11; and equivalents thereof."[7] The parties had agreed to that construction in their related district court litigation.[8] To the extent relevant to this declaration, I have assumed this agreed construction.

3. "control component"

59. In its institution decisions for each of the '767 IPRs, the Board determined, for the purposes of institution, that the term "control component" is not a means-plus-function term.[9] In particular, the Board determined that: "Given the context provided by claim 1 as a whole, a person having ordinary skill in the art would have understood the 'control component' as identifying a specific structure (requiring a microprocessor, control program, and switch as claim 1 recites)."[10]

60. I agree that to a POSITA, the limitations in claim 1 including "microprocessor," "control program," and "switch" identify specific structure for performing the functions of the "control component. Because of this, I understand that the means-plus-function provision of 35 U.S.C. § 112 ¶ 6 does not apply, and I have applied this term according to its

[7] IPR2024-00697, Paper 9 at 11; IPR2024-00698, Paper 9 at 10–11.
[8] IPR2024-00697, Ex. 3001 at 11; IPR2024-00698, Ex. 3001 at 11.
[9] IPR2024-00697, Paper 9 at 11; IPR2024-00698, Paper 9 at 11.
[10] IPR2024-00697, Paper 9 at 11; IPR2024-00698, Paper 9 at 11.

plain and ordinary meaning. Unless I specifically state otherwise, however, the opinions I offer here also apply if I assume the means-plus-function constructions for "control component" proposed by Apple in its petitions in the '767 IPRs.[11]

B. '830 Patent Terms

1. "driving component"

61. In its institution decision for the '830 IPR, the Board determined, for the purposes of institution, that the term "driving component" is a means-plus-function term, with a function "drives the moveable component to oscillate within the housing" and a corresponding structure of:

> [A] coil of conductive wire 420" (Figures 4A-4G); "coil 514" (Figures 5A–5B); "coil 626" (Figure 6); "electromagnet" (Figures 10-11); "additional coils 1202 and 1204" (Figure 12); "coils 1302 and 1304" (Figure 13); "driving coils 1412 and 1414" (Figure 14); "coil 1510" (Figures 15-17); "stator coils" (Figures 24A-25)[12]

62. The parties had agreed to that construction in their related district court litigation.[13] To the extent relevant to this declaration, I have assumed this agreed construction.

2. "control component"

63. In its institution decision for the '830 IPR, the Board determined, for the purposes of institution, that the term "control component" of independent claims 1 and 19 is a means-plus-function term.[14] The parties agreed that the claimed function is "controls supply of power from the power supply to the driving component to cause the moveable component

---

[11] IPR2024-00697, Petition at 8–9; IPR2024-00698, Petition at 8–10.
[12] IPR2024-00806, Paper 11 at 12–13.
[13] IPR2024-00806, Ex. 3001 at 11.
[14] IPR2024-00806, Paper 11 at 20.

to oscillate at a frequency and an amplitude specified by one or more stored values."[15] For purposes of institution, the Board adopted the same construction of the corresponding structure as adopted by the District Court in the Apple Litigation: "a microcontroller, a processor, a microprocessor, or a CPU that performs the algorithm shown in Steps 706 through 716 in Figure 7A, with reference to all steps shown in Figure 7B other than Step 734 and all steps shown in Figure 7C, <u>or</u> the algorithm described in the corresponding text, *See, e.g.*, 7:20–7:34, 7:42–7:52, 7:60–8:40, and equivalents thereof."[16] The Board summarized its construction as follows:

> In summary, the corresponding structure of the "control component" under a means plus function interpretation that relies upon a microprocessor (and memory) as corresponding structure further requires algorithmic structure at least for 1) operating a timer or its equivalent to flip the polarity of a control value periodically corresponding to a user-selected frequency and input the control value to an H-bridge switch circuit to change the direction of the current through the coil as supplied by the power supply, and 2) computing an output value corresponding to a user-selected amplitude of oscillation and outputting the value to the claimed power supply so that the power supply outputs an appropriate current amplitude to a coil.[17]

64. I understand that Petitioner has proposed the corresponding structure "one of the switches shown in Figures 5A-6 and described at 5:52–6:5, 6:9–16, and the processor (also referred to as microprocessor, microcontroller, or CPU) that performs the algorithm shown in Figures 7A–7C and described at 6:52–8:40."[18]

---

[15] IPR2024-00806, Paper 11 at 13.
[16] IPR2024-00806, Paper 11 at 13–14.
[17] IPR2024-00806, Paper 11 at 20.
[18] IPR2024-00806, Paper 11 at 13 (citing Pet. 4; Reply 2).

65. The ’830 patent describes Fig. 7C:

> FIG. 7C provides a control-flow diagram for the routine “control,” called in step **716** in FIG. 7A. This routine is invoked when a change in the user controls has occurred. In step **760**, the variables mode and strength are set to the currently selected mode and vibrational strength, represented by the current states of control features in the user interface. Next, in step **762**, the routine “control” computes an output value p corresponding to the currently selected strength, stored in the variable strength, and outputs the value p to the power supply so that the power supply outputs an appropriate current to the coil.[19]

[19] ’830 patent at 8:20–30.

Resonant Systems, Inc., Ex. 2009
Sony Interactive Entertainment Inc., etc. v. Resonant Systems, Inc., IPR2024-00807

66. The figure described in the text appears below:[20]

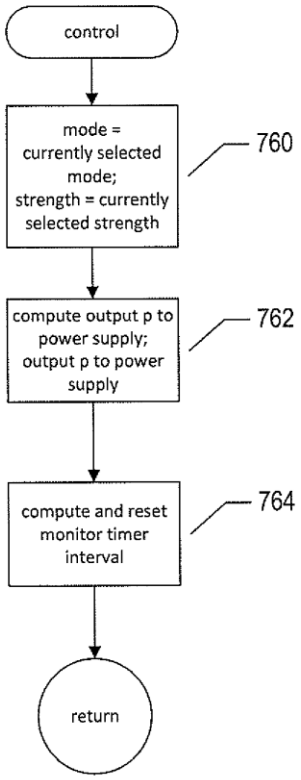

FIG. 7C

67. Under either Petitioner's proposal or the Board's preliminary construction, the corresponding structure of the "control component" requires algorithmic structure for computing an output to the power supply and providing that output to the power supply, corresponding to step 762 of Figure 7C and to step 762 described at 8:26-30 of the '830 Patent.[21] Figure 7C indicates that step 762 requires "compute output p to power supply;

[20] '830 patent Fig. 7C.
[21] '830 patent Fig. 7C and 8:26–30.

Resonant Systems, Inc., Ex. 2009
Sony Interactive Entertainment Inc., etc. v. Resonant Systems, Inc., IPR2024-00807

output p to power supply."[22] Under the District Court's construction and the Board's preliminary construction, the corresponding text of the specification provides an alternative structure: "the routine 'control' computes an output value p corresponding to the currently selected strength, stored in the variable strength, and outputs the value p to the power supply so that the power supply outputs an appropriate current to the coil."[23] Under either alternative in the District Court's construction and Board's preliminary construction, and also under Petitioner's construction, the processor must compute an output value p and output that value to the power supply.

68. In my opinion, any proper construction of the "control component" limitation requires that a processor, CPU, or microprocessor satisfying the limitation must include steps corresponding to steps 760 and 762, including in particular a step to "provide a corresponding output to the power supply."

3. '830 Patent Claims 4–6

69. In my opinion, claim 4 of the '830 patent contains a clear typographical error in the identification of which claim it depends from. Claim 3 introduces limitations of "sensors" and "one or more operational control outputs of the control component."[24] The very next claim then refers to "the sensors" and "the one or more operational control outputs."[25] Ordinarily, use of "the" in this manner in a patent claim indicates a reference to a "sensor" or "one or more operational control outputs of the control component" that was introduced in a parent claim or earlier in the same claim. The natural conclusion is that these terms in

[22] '830 patent Fig. 7C.
[23] '830 patent at 8:26–30.
[24] '830 patent at 16:15–20.
[25] '830 patent at 16:21–27.

Resonant Systems, Inc., Ex. 2009
Sony Interactive Entertainment Inc., etc. v. Resonant Systems, Inc., IPR2024-00807

claim 4 are meant to refer to the corresponding terms in claim 3, and thus that claim 4 was meant to depend on claim 3.

70. Therefore, in my opinion, claim 4 of the ’830 patent should be interpreted as depending from claim 3, and the statement that it instead depends from 1 should be understood as a typographical error that can be corrected. I note that the district court hearing litigation between Patent Owner and Apple reached the same conclusion.[26]

C. ’337 Patent Terms

1. “driving component”

71. In its institution decision for the ’337 IPR, the Board determined, for the purposes of institution, that the term “driving component” is a means-plus-function term, with a function “drives the moveable component to oscillate within the housing” and a corresponding structure of:

> [A] coil of conductive wire 420” (Figures 4A-4G); “coil 514” (Figures 5A–5B); “coil 626” (Figure 6); “electromagnet” (Figures 10-11); “additional coils 1202 and 1204” (Figure 12); “coils 1302 and 1304” (Figure 13); “driving coils 1412 and 1414” (Figure 14); “coil 1510” (Figures 15-17); “stator coils” (Figures 24A-25)[27]

72. The parties had agreed to that construction in their related district court litigation.[28] To the extent relevant to this declaration, I have assumed this agreed construction.

[26] IPR2024-00806, Ex. 3001 at 50.
[27] IPR2024-00807, Paper 10 at 12.
[28] IPR2024-00807, Ex. 3001 at 11.

Resonant Systems, Inc., Ex. 2009
Sony Interactive Entertainment Inc., etc. v. Resonant Systems, Inc., IPR2024-00807

2. "control component"

73. In its institution decision for the '337 IPR, the Board determined, for the purposes of institution, that the term "control component" of independent claim 2 is a means-plus-function term.[29] The parties agreed that the claimed function is "controls supply of power from the power supply to the driving component to cause the moveable component to oscillate at a frequency and an amplitude specified by user input received from the user-input features."[30] For purposes of institution, the Board adopted the same construction of the corresponding structure as adopted by the District Court in the Apple Litigation: "a microcontroller, a processor, a microprocessor, or a CPU that performs the algorithm shown in Steps 706 through 716 in Figure 7A, with reference to the steps shown in Figures 7B and 7C, or the algorithm described in the corresponding text, See, e.g. 7:10–7:24, 7:32–8:30 and/or equivalents thereof."[31] The Board summarized its construction as follows:

> In summary, the corresponding structure of the "control component" under a means-plus-function interpretation that relies upon a microprocessor (and memory) as corresponding structure further requires algorithmic structure at least for 1) operating a timer or its equivalent to flip the polarity of a control value periodically corresponding to a user-selected frequency and input the control value to an H-bridge switch circuit to change the direction of the current through the coil as supplied by the power supply, and 2) computing an output value corresponding to a user-selected amplitude of oscillation and outputting the value to the claimed power supply so that the power supply outputs an appropriate current amplitude to a coil.[32]

---

[29] IPR2024-00807, Paper 10 at 12-13.
[30] IPR2024-00807, Paper 10 at 12-13.
[31] IPR2024-00807, Paper 10 at 13.
[32] IPR2024-00807, Paper 10 at 20.

74. I understand that Petitioner has proposed the corresponding structure "one of the switches shown in Figures 5A-6 and described at 5:45–65, 6:2–8, and the processor (also referred to as microprocessor, microcontroller, or CPU) that performs the algorithm shown in Figures 7A–7C and described at 6:43–8:30 and 13:3–41."[33]

75. The '337 patent describes Fig. 7C:

> FIG. 7C provides a control-flow diagram for the routine "control," called in step **716** in FIG. 7A. This routine is invoked when a change in the user controls has occurred. In step **760**, the variables mode and strength are set to the currently selected mode and vibrational strength, represented by the current states of control features in the user interface. Next, in step **762**, the routine "control" computes an output value p corresponding to the currently selected strength, stored in the variable strength, and outputs the value p to the power supply so that the power supply outputs an appropriate current to the coil.[34]

[33] IPR2024-00807, Paper 10 at 13.
[34] '337 patent at 8:10–20.

Resonant Systems, Inc., Ex. 2009
Sony Interactive Entertainment Inc., etc. v. Resonant Systems, Inc., IPR2024-00807

76. The figure described in the text appears below:[35]

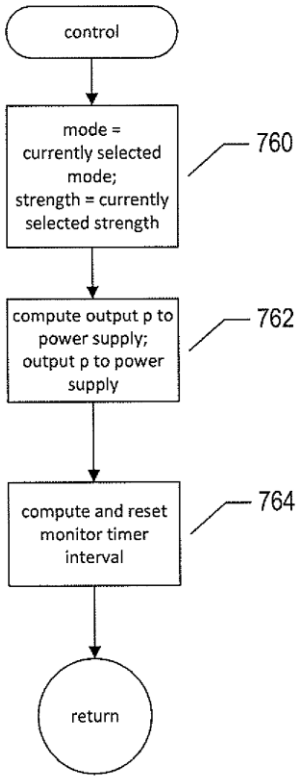

FIG. 7C

77. Under either Petitioner's proposal or the Board's preliminary construction, the corresponding structure of the "control component" requires algorithmic structure for computing an output to the power supply and providing that output to the power supply, corresponding to step 762 of Figure 7C and to step 762 described at 8:16–20 of the '830 Patent.[36] Figure 7C indicates that step 762 requires "compute output p to power supply;

[35] '337 patent Fig. 7C.
[36] '337 patent Fig. 7C and 8:16–20.

Resonant Systems, Inc., Ex. 2009
Sony Interactive Entertainment Inc., etc. v. Resonant Systems, Inc., IPR2024-00807

output p to power supply."[37] Under the District Court's construction and the Board's preliminary construction, the corresponding text of the specification provides an alternative structure: "the routine 'control' computes an output value p corresponding to the currently selected strength, stored in the variable strength, and outputs the value p to the power supply so that the power supply outputs an appropriate current to the coil."[38] Under either alternative in the District Court's construction and Board's preliminary construction, and also under Petitioner's construction, the processor must compute an output value p and output that value to the power supply.

78. In my opinion, any proper construction of the "control component" limitation requires that a processor, CPU, or microprocessor satisfying the limitation must include steps corresponding to steps 760 and 762, including in particular a step to "provide a corresponding output to the power supply."

IX. OBVIOUSNESS

A. '767 IPRs (IPR2024-00697 and IPR2024-00698)

1. No Motivation to Combine the References in IPR2024-00697 (all grounds)

79. Each ground of the -00697 IPR requires combining Shahoian with Cosper, in some cases with additional references as well. Cosper is from a different field of endeavor than Shahoian and is not pertinent to the problems being addressed in Shahoian. For these reasons, I understand that Shahoian and Cosper are not considered analogous art that could be combined to demonstrate obviousness. Even if they were considered to be analogous art,

[37] '337 patent Fig. 7C.
[38] '337 patent at 8:16–20.

Resonant Systems, Inc., Ex. 2009
Sony Interactive Entertainment Inc., etc. v. Resonant Systems, Inc., IPR2024-00807

the differences between them mean that a POSITA would not be motivated to combine them as proposed by the petition.

80. Ground 1A of the -00697 IPR involves modifying Shahoian to add "feedback" and "multiple sensors" based upon Cosper.[39] Grounds 1B and 1C add additional features from Rossi and from Ramsay, but they still rely on modifying Shahoian to add the same features from Cosper as Ground 1A.[40] Ground 2A adds a "feedback control algorithm" from the Aldrich reference, but it describes adding that to a system "that implement feedback control in accordance with Cosper."[41] Like Ground 1B, Ground 2B adds features from Rossi, but it still relies upon the same feedback control in accordance with Cosper and feedback control algorithm from Aldrich as Ground 2A.[42] Thus, each of the grounds depends on the combinability of Shahoian with Cosper.

81. Shahoian identifies its field of endeavor[43]:

> The present invention is directed to moving magnet actuators that provide haptic sensations in a ***haptic feedback device*** that is interfaced with a host computer. The present invention provides actuators that output high magnitude, ***high bandwidth vibrations*** for more compelling force effects.

82. Shahoian specifically seeks to be able to produce vibrations over a range of different frequencies "independently" from the magnitude of vibration:

[39] IPR2024-00697, Petition at 15–16.
[40] IPR2024-00697, Petition at 31–36, 47–52.
[41] IPR2024-00697, Petition at 31–36, 55–56.
[42] IPR2024-00697, Petition at 73–75.
[43] IPR2024-00697, Ex. 1004 at 2:3–8.

Resonant Systems, Inc., Ex. 2009
Sony Interactive Entertainment Inc., etc. v. Resonant Systems, Inc., IPR2024-00807

> Both the frequency and amplitude of the vibrations can be controlled using bi-directional control, and features such as the elastic material and flexures contribute to a high quality and ***high bandwidth vibration*** force output.[44]
>
> The controller can also ***adjust the frequency of the drive waveform independently of the amplitude*** to adjust the frequency of vibration. This allows different frequency vibrations to be output independently of the magnitude of those vibrations.[45]

83. When Shahoian mentions the gain due to operating near resonance, it describes it as an effect that must be counteracted in order to achieve the desired "flat" frequency response, not a desirable effect to take advantage of[46]:

> The linear actuator **100** provides a greater magnitude of vibrations at higher frequencies (assuming the waveform magnitude is held constant). This gain at higher frequencies is due primarily to the vibration occurring at the resonance frequency of the mechanical system including actuator, foam, housing, etc., and, if desired, ***can be compensated for in other embodiments to obtain a more flat response by providing compensating frequencies that will provide the desired response*** (e.g. from a look-up table or firmware).

84. Cosper's field of endeavor has nothing to do with haptic feedback or with high bandwidth vibrations. Rather, Cosper describes an optical beam scanner, e.g., where a "light source is used in conjunction with a resonant engine (not shown) having a mirror and a bias, and a mirror driver that oscillates the mirror at or near a resonant frequency of

[44] IPR2024-00697, Ex. 1004 at 4:56–60.
[45] IPR2024-00697, Ex. 1004 at 7:41–45.
[46] IPR2024-00697, Ex. 1004 at 7:54–62.

the mirror and bias" and "[a]s a result, the spot of light from the light source is effectively scanned over the target."[47] Cosper does not describe haptics or tactile applications at all.

85. While Cosper does use the words "linear . . . movement" in abstract, the two embodiments shown describe rotational motion of the moving mass. The embodiment shown in fig. 2 describes "the electromagnetic coil 207 can be excited by electrical current to create a magnetic field that interacts with the magnet 209 to load the bias 205 and thereby move the mirror 201 around the light source 203, projecting the light from the opening in the housing 220 in the process."[48] The second embodiment shown in Figure 15 shows clearly rotational movement[49]:

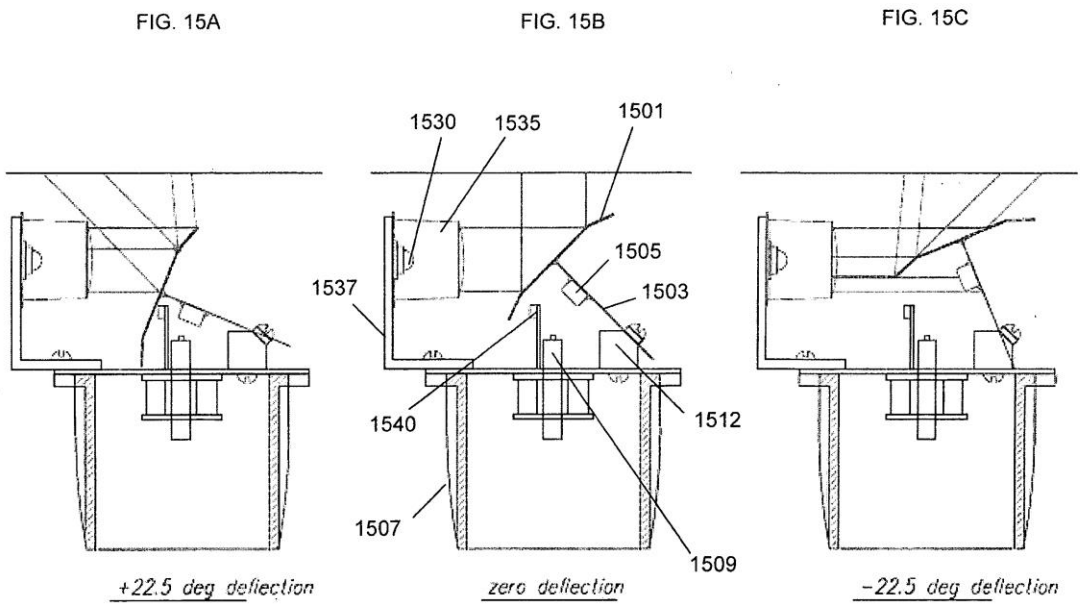

[47] IPR2024-00697, Ex. 1009, ¶ [0067].
[48] IPR2024-00697, Ex. 1009, ¶ [0073].
[49] IPR2024-00697, Ex. 1009, Fig. 15.

Resonant Systems, Inc., Ex. 2009
Sony Interactive Entertainment Inc., etc. v. Resonant Systems, Inc., IPR2024-00807

86. In addition, Cosper is not in the field of "high bandwidth" vibrations. Instead, it explains that[50]:

> Driving a mechanical resonant system for low loss, and a ***high Q***, at or near its resonant frequency using an external frequency references may require a ***highly stable frequency source***. It may also require that the resonant frequency of the mass and spring mechanism itself be very stable. The frequency of the two systems, one mechanical, and one electronic, will typically drift apart over time. ***Even relatively small variations in frequency*** between the two systems may ***cause the amplitude of the mechanical oscillations to decrease significantly***.

87. The high "Q" or quality factor that Cosper refers to "may be defined as the resonance frequency divided by the resonator bandwidth," and a "nearly equivalent definition of from mechanics is the amplitude gain at resonance."[51] Thus, a "high Q" implies a narrow bandwidth, with high gain but only at frequencies very close to the resonant frequency. This is the opposite of Shahoian's "high bandwidth" (and thus low Q) system that can operate at a range of frequencies, with a relatively "flat response" and ability to adjust frequency and amplitude independently.

88. Thus, Shahoian's high bandwidth (low Q) haptic feedback device and Cosper's low bandwidth (high Q) scanning light source device belong to different fields of endeavor. Cosper's techniques for "driving . . . and maintaining oscillations . . . at a resonant frequency"[52] apply to a high Q system, where "even relatively small variations in frequency"

---

[50] IPR2024-00697, Ex. 1009, ¶ [0007].
[51] Ex. 2016.
[52] IPR2024-00697, Ex. 1009, ¶ [0009].

Resonant Systems, Inc., Ex. 2009
Sony Interactive Entertainment Inc., etc. v. Resonant Systems, Inc., IPR2024-00807

from resonance must be avoided.[53] They are not pertinent to any problem Shahoian is involved with, given its high bandwidth, intentional operation at multiple frequencies and relatively flat frequency response. There also would be no motivation for applying Cosper's techniques for maintaining the oscillations at the resonant frequency to Shahoian. Operation at resonance is not specifically desirable in the Shahoian system, which instead must operate over a range of frequencies. Even when operating in the vicinity of resonance, there is no particular importance in Shahoian to maintaining the oscillation specifically at resonance, as Cosper teaches, because the gain in Shahoian's low Q, high bandwidth system is not highly sensitive to small variations in frequency.

89. The addition of the Aldrich reference to the combinations in Grounds 2A and 2B does not change the situation. Like Cosper, Aldrich addresses the problem of keeping the frequency "at or near the resonance frequency," through its teaching of "fine resonance tracking."[54] Like Cosper, Aldrich is not in the same field of endeavor as Shahoian, is not pertinent to problems Shahoian is involved with, and a POSITA would not have been motivated to apply its "fine resonance tracking" to the devices taught by Shahoian.

90. For these reasons, each ground of the -00697 IPR involves combining references that are not analogous, and even if they were analogous a POSITA would not have been motivated to make the proposed combinations.

[53] IPR2024-00697, Ex. 1009, ¶ [0007].
[54] IPR2024-00697, Ex. 1021 at 1–2.

Resonant Systems, Inc., Ex. 2009
Sony Interactive Entertainment Inc., etc. v. Resonant Systems, Inc., IPR2024-00807

2. Failure to Satisfy [1.5.3] "a switch that receives a directional signal d from the processor" (IPR2024-00698, all claims and all grounds)

91. Limitation [1.5.3] of the '767 patent includes the requirement of "a switch that receives a directional signal d from the processor."[55] For each of the grounds of the -00698 IPR, the petition relies on Izumi as teaching this feature.

92. For example, Ground 1A relies on a combination of Izumi with Cosper, but both in the petition and in the declaration of Dr. Hannaford it relies upon the only citations to prior art for this limitation are citations to Izumi.[56] Ground 1B adds citations to the Rossi reference for limitation [1.5.3], but not for evidence of a processor or that the processor is the source of the directional signal d.[57] Grounds 1C, 1D, 2A, and 2B add no further citations to prior art references for limitation [1.5.3].[58] Accordingly, all grounds rest on the Ground 1A citations to Izumi to satisfy the "switch that receives a directional signal d from the processor" limitation.

93. Focusing on Ground 1A then, the sole argument presented for this limitation is the following paragraph[59]:

> In the combination, the switch receives the control signals (e.g. S1-S4) from the microprocessor. APPLE-1005, [0060] ("The switching elements Q1 to Q4 are controlled by control signals S1 to S4, respectively, which are inputted into the base terminals by the current waveform decider 60."); see also [0049]-[0051], [0057]-[0059], [0061]; APPLE-1003, ¶138.

---

[55] '767 Patent at 11:21–22.
[56] IPR2024-00698, Petition at 27–28; Ex. 1003, ¶¶ 134–138.
[57] IPR2024-00698, Petition at 36–38; Ex. 1003, ¶¶ 150–151.
[58] IPR2024-00698, Petition at 51–53, 71, 74; Ex. 1003, ¶¶ 153, 175, 219, 228.
[59] IPR2024-00698, Petition at 28.

94. The evidence presented by Dr. Hannaford for this aspect of limitation [1.5.3] is substantively the same as in the paragraph quote above.[60]

95. All that the quoted portion of Izumi says is that the control signals come from "the current waveform decider 60."[61] Nowhere does Izumi say that the current waveform decider is a "microprocessor" or that the arrow in Figure 2 connecting it to "alternating voltage output part" 61 is a signal "from [a] processor"[62]:

FIG. 2

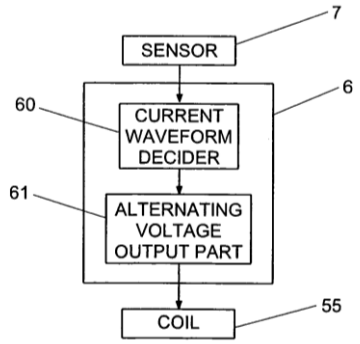

96. None of the cited paragraphs [0049]-[0051], [0057]-[0061] mentions a processor or suggest that the output of the current waveform decider is—or even would be obvious to be—a signal "from the processor."

97. A different paragraph of Izumi mentions a "CPU"[63]:

> Although each of the ON-time and the OFF-time of the voltage is controlled in order to form the intended current waveform in this embodiment, in the actual real time control, it can be difficult to perform complicated control at every half-cycle or one cycle of the moving element **1** due to a constraint of

[60] IPR2024-00697, Ex. 1003, ¶ 138.
[61] IPR2024-00698, Ex. 1005, ¶ [0060].
[62] IPR2024-00698, Ex. 1005, Fig. 2.
[63] IPR2024-00698, Ex. 1005, ¶ [0063].

> the control device, ***such as CPU speed, ROM capacity***, etc. So, the controller may control a ratio of the ON-time (T**1**) to the OFF-time (T**2**), namely a duty ratio (T**1**/T**2**), while keeping the sum of the ON-time and the OFF-time (T**3**=T**1**+T**2**) constant. ***That is, the controller may use a so-called PWM control method. In this case, the controller 6 can form an intended current waveform without using a complex control system.***

98. While this mentions a CPU, it does not mention a directional signal d that is "from the [CPU]." Rather, it suggests that any CPU would not be a signal "from" the CPU, because implementing such a "complex control system" on the CPU would run into constraints of "CPU speed" or "ROM capacity." Instead, this paragraph suggests that the controller form the waveform using "PWM control."[64]

99. A POSITA would understand that "PWM control" would not require that the directional signal itself be generated by, or otherwise be "from," a processor. Indeed, a POSITA would understand that pulse width modulation (PWM) can readily be performed by entirely analog circuit, such as the following circuit from a Texas Instruments reference design, taking an analog voltage V_{IN} as its input[65]:

[64] IPR2024-00698, Ex. 1005, ¶ [0063].
[65] Ex. 2017 at 3.

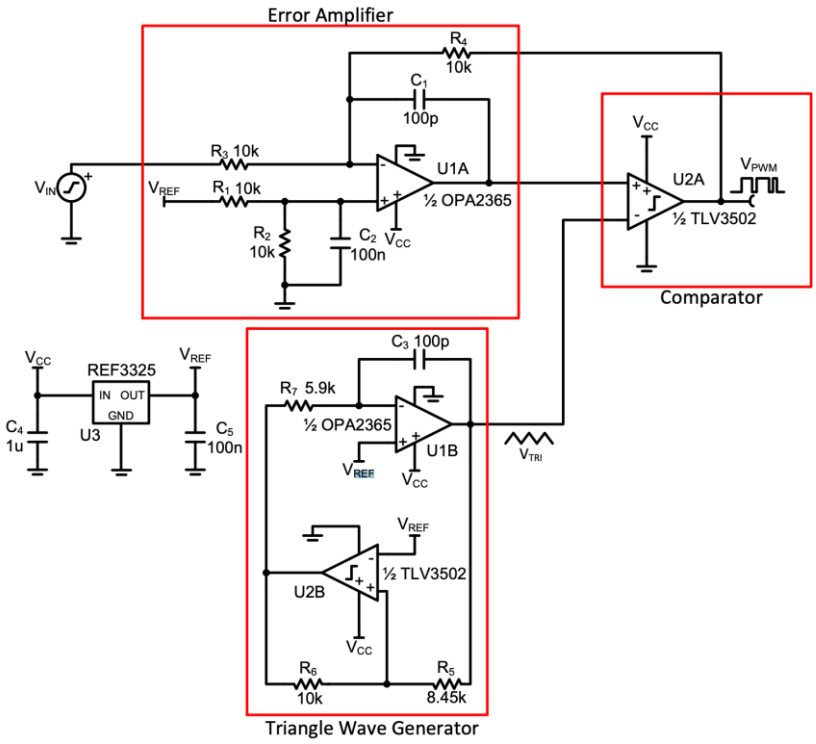

Figure 2: Complete circuit schematic with functional portions highlighted.

100. For these reasons, Izumi does not teach the claimed "switch that receives a directional signal d from the processor." Dr. Hannaford's backup argument that it would be obvious to modify Izumi to satisfy this limitation provides no motivation for doing so, beyond the assertion that it "would have furthered Izumi's straightforward teachings, and efficiently utilized the microprocessor of the combined system."[66] But as explained above, Izumi's only teachings that mention a CPU are describing the "constraints" that stand in the way of implementing a "complex control system" on the CPU. Neither the petition nor Dr. Hannaford point to any motivation a POSITA would have had to disregard these teachings and utilize "a directional signal d from the processor" anyway.

101. Because Apple has failed to show that the prior art discloses a "switch that receives a directional signal d from the processor" and has failed to demonstrate that a POSITA

[66] IPR2024-00698, Ex. 1003, ¶ 136.

would have been motivated to modify the art to add this feature, it has failed to show that claim 1 or any of claims 2–5 that depend from it are obvious under any of the proposed grounds.

3. Failure to Satisfy Both [2.3] "a directional-signal splitter/inverter that generates two complementary internal signals d and $\overline{d}$" and [2.4] "two pairs of solid-state switches, a first switch of each pair controlled by internal signal d and a second switch of the pair controlled by internal signal $\overline{d}$" (Grounds 1B, 1C, and 2B of -00697 IPR and Grounds 1B, 1D, 2B of -00698 IPR)

102. Claim 2 of the '767 Patent includes the limitations:

> [2.3] a directional-signal splitter/inverter that generates ***two complementary internal signals, d and $\overline{d}$***, corresponding to directional-signal d; and
>
> [2.4] ***two pairs of solid-state switches, a first switch of each pair controlled by internal signal d and a second switch of the pair controlled by internal signal $\overline{d}$***, that apply the input voltage in a first direction to the driving component when the d is in a first voltage state and that apply the input voltage in a second direction to the driving component when the d is in a second voltage state.[67]

Claims 3–5 depend from claim 2 and thus also include these limitations.[68]

103. To satisfy these limitations in each of Grounds 1B, 1C, and 2B of -00697 IPR and Grounds 1B, 1D, 2B of -00698 IPR, the petitions depend on the "H-bridge switching circuit" of the Rossi reference[69]:

---

[67] '767 Patent at 12:3–12.
[68] '767 Patent at 12:13–33.
[69] IPR2024-00697, Petition at 31–32, 40–46, 52–54, 75; IPR2024-00698, Petition at 30–31, 40–45, 51–52, 75; annotated figure is from IPR2024-00697, Petition at 41, IPR2024-00698, Petition at 41.

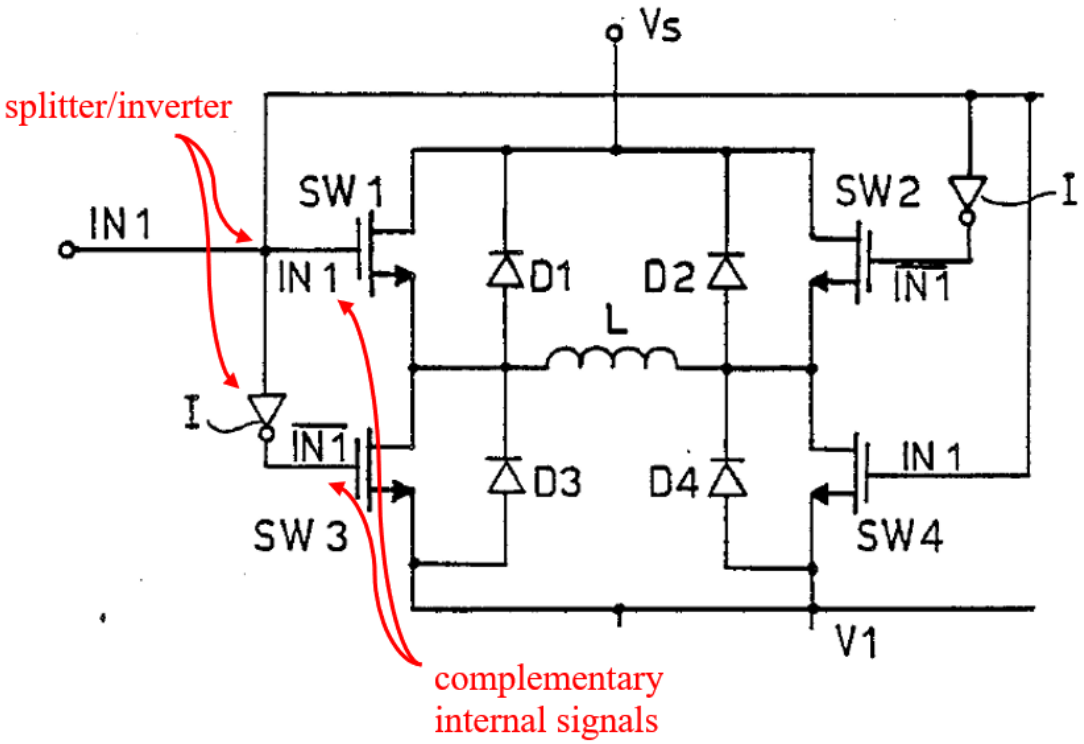

104. As the petitions state, each of the symbols made up of a triangle with a small circle at one vertex, labeled "I," is an inverter.[70] According to the petitions, the junction and inverter "I" with red arrows pointing to them correspond to the "splitter/inverter" of limitation [2.3], and the signals "IN 1" and "$\overline{\text{IN 1}}$" correspond to the claimed internal signals d and $\overline{\text{d}}$ of limitation [2.3], respectively.[71]

105. As for limitation [2.4], the petitions point to switches "SW2" and "SW3" of the Rossi figure as corresponding to the "second switch" of each pair.[72] But these switches fail to satisfy the limitation "controlled by internal signal $\overline{\text{d}}$," as required by [2.4]. While each of SW2 and SW3 is shown receiving a signal labelled "$\overline{\text{IN 1}}$," only the signal received by SW3 is the "internal signal $\overline{\text{d}}$," i.e. the signal generated by the splitter/inverter of limitation

[70] IPR2024-00697, Petition at 40; IPR2024-00698, Petition at 40.
[71] IPR2024-00697, Petition at 40; IPR2024-00698, Petition at 40.
[72] IPR2024-00697, Petition at 42; IPR2024-00698, Petition at 42.

[2.3]. The signal labelled "$\overline{\text{IN 1}}$" that is received by SW2 is generated by a different inverter "I" on the right hand side of the circuit diagram.

106. For these reasons, the "H-bridge switching circuit" of Rossi does not satisfy both limitation [2.3] and [2.4], as they appear together in claims 2–5 of the '767 patent. As a result, the petitions fail to establish that any of these claims is obvious under any of their asserted grounds.

4. Failure to Satisfy Either "Vibration Sensor" or "Continuously Monitors Output from the Vibration Sensor" in Claim 3 (Grounds 1B and 2B of -00697 IPR and Grounds 1B and 2B of -00698 IPR)

107. Limitation [3.1] of the '767 patent adds the requirement of "a vibration sensor."[73] For this "vibration sensor," each petition points to an "accelerometer" that is distinct from the sensors that were mapped to the limitations of claim 1.[74] Specifically, the -00697 petition points to "a vibration sensor (***accelerometer***) in addition to the sensors associated with 'position' and 'velocity' that are used as part of the feedback control," and the -00698 petition points to "a vibration sensor (***accelerometer in accordance with Cosper***) in addition to the sensors associated with 'position' and 'velocity' that are used as part of the feedback control."[75]

108. While the -00698 petition is clear that it is pointing to Cosper for teaching of an accelerometer, the -00697 petition is silent on which reference or references it relies upon for the accelerometer. But neither petition cites to anything in Cosper or any other reference

[73] '767 patent at 12:15.
[74] IPR2024-00697, Petition at 45; IPR2024-00698, Petition at 45.
[75] IPR2024-00697, Petition at 45; IPR2024-00698, Petition at 45.

Resonant Systems, Inc., Ex. 2009
Sony Interactive Entertainment Inc., etc. v. Resonant Systems, Inc., IPR2024-00807

that is allegedly an accelerometer. Each petition does cite to a declaration of Dr. Hannaford's.[76] Dr. Hannaford is clear in each declaration that he is pointing to an "accelerometer" that is "in accordance with Cosper."[77] But like the petitions, his declaration do not point to anything in Cosper that is allegedly an accelerometer.[78] The only exhibit that either the petitions or Dr. Hannaford's declarations point to for this limitation that actually mention an accelerometer is the '767 patent itself.[79]

109. For these reasons, I believe that the petition fails to identify what in the prior art it points to as the claimed "vibration sensor" or what the claimed "vibration sensor" would be in the proposed combination.

110. The petition also fails to explain why a POSITA would have been motivated to add a separate accelerometer for adjusting frequency, in addition to the sensors already being used for the feedback control in the mapping of claim 1. While Cosper speaks generically of "one or more sensors,"[80] it never mentions an accelerometer, let alone an accelerometer in combination with other sensors measuring position and velocity. The petition and Dr. Hannaford fail to explain why a POSITA would be motivated to use this particular combination of sensors, in a way that would satisfy claim 3, either to achieve the oscillation near resonance desired in Cosper or for any other reason. For these reasons, each petition fails to show that a combination satisfying limitation [3.1] would have been obvious.

---

[76] IPR2024-00697, Petition at 45; IPR2024-00698, Petition at 45.
[77] IPR2024-00697, Ex. 1003, ¶ 158; IPR2024-00698, Ex. 1003, ¶ 162.
[78] IPR2024-00697, Ex. 1003, ¶ 158; IPR2024-00698, Ex. 1003, ¶ 162.
[79] IPR2024-00697, Petition at 45, Ex. 1003, ¶ 158; IPR2024-00698, Petition at 45, Ex. 1003, ¶ 162.
[80] IPR2024-00697, IPR2024-00698, Ex. 1009, ¶ [0050].

Resonant Systems, Inc., Ex. 2009
Sony Interactive Entertainment Inc., etc. v. Resonant Systems, Inc., IPR2024-00807

111. Limitation [3.2] of the ’767 patent adds the requirement that the control program “continuously monitors output from the vibration sensor.”[81] Both the petitions and the declarations from Dr. Hannaford that they cite fail to point to anything in the prior art references that teaches “continuous” monitoring or to explain why it would have been obvious to modify the prior art to perform such “continuous” monitoring.[82] Indeed, the only exhibit that either the petitions or Dr. Hannaford’s declarations point to for this limitation that actually describes continuous monitoring is the ’767 patent itself.[83] For these reasons, each petition fails to show that a combination satisfying limitation [3.2] would have been obvious.

B. ’830 IPR (IPR2024-00806)

1. Failure to Satisfy Both 1[c]/19[c]/20[c] “power supply” and 1[f]/19[f]/20[f] “control component” (all grounds)

112. Claims 1 and 19 of the ’830 patent both require a “power supply” and, under the proper means-plus-function construction of the “control component” term, a control component that includes steps corresponding to steps 760 and 762, including in particular a step to “provide a corresponding output to the power supply.” I discuss the proper construction of the “control component” of this term above.

113. For the “power supply” and “control component” limitations, Ground 1A of the petition relies on the teachings of Gregorio, and all of the other grounds rely on the Ground

[81] ’767 patent at 12:16–17.

[82] IPR2024-00697, Petition at 4–465, Ex. 1003, ¶ 159; IPR2024-00698, Petition at 45–46, Ex. 1003, ¶ 163.

[83] IPR2024-00697, Petition at 4–465, Ex. 1003, ¶ 159; IPR2024-00698, Petition at 45–46, Ex. 1003, ¶ 163.

1A analysis.[84] For Ground 2A alone, the petition further asserts that "the Gregorio-Ramsay-Rossi-Aldrich combination provides that the processor is programmed with the algorithm described in Figures 7A-7C of the '830 patent under the means-plus-function construction."[85]

114. For the claimed "power supply," the petition asserts that "a person of ordinary skill in the art (POSITA) would have understood that actuator drive circuit 16 corresponds to, or is coupled to, a power supply," and further notes that "Gregorio also describes 'current generator 422' as a power supply to convert a pulse to current that flows into LRA 18."[86] The petition provides the following annotated illustration[87]:

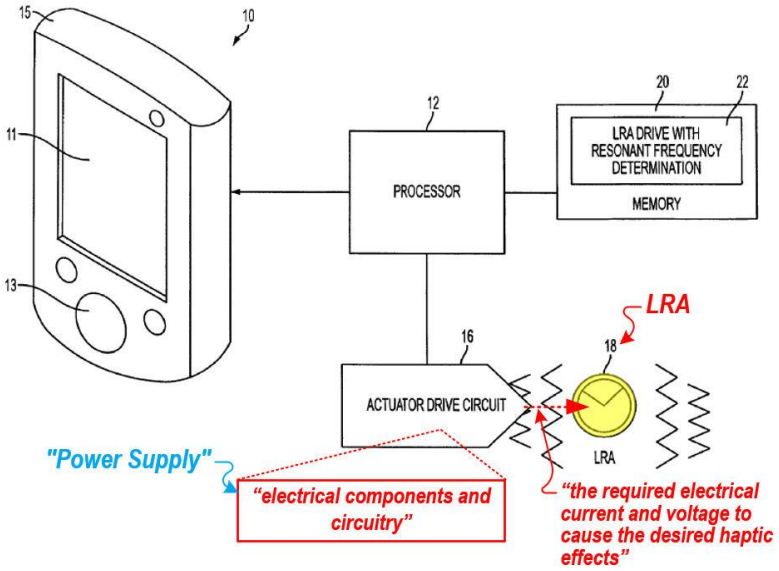

[84] IPR2024-00806, Petition at 13–14, 29, 36, 40, 45, 50–51, 53–54, 63–64, 72, 74, 75.
[85] IPR2024-00806, Petition at 65.
[86] IPR2024-00806, Petition at 14.
[87] IPR2024-00806, Petition at 14.

115. For the claimed "control component," the petition relies on Gregorio's "processor 12" and "memory 20," as shown in the following annotated illustration[88]:

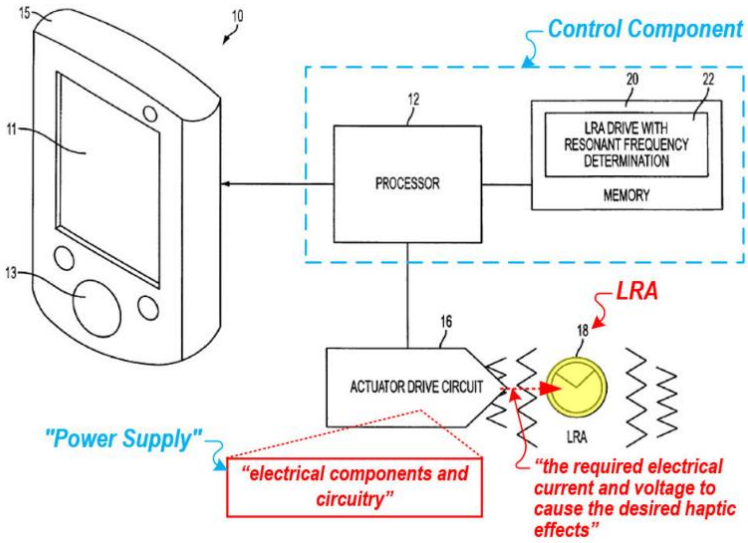

116. For the first theory of the power supply, "that "a person of ordinary skill in the art (POSITA) would have understood that actuator drive circuit 16 corresponds to, or is coupled to, a power supply," Petitioner concedes directly in that statement that drive circuit 16 may not be a power supply, let alone one that receives a signal, as required by the claim. Gregorio never uses the words "power supply." In fact a POSITA would recognize in the above drawing that a power supply is required that is not shown. That that unshown power supply receives a signal from the processor is a sweeping conclusion that does not follow from any obviousness argument.

117. For the second theory of the power supply that it is current generator 422, it is clearly shown in the figure as a dumb voltage-to-current converter (in fact it appears labeled as such, "V-I," where V-I appears to directly refer to voltage-current converter. The

[88] IPR2024-00806, Petition at 17.

petition does not and cannot show that current generator 422 receives any input from a processor executing an algorithm as claimed in the ’820 patent. Correspondingly, the petition does not and cannot show any processor or algorithm that provides a corresponding output to the power supply, as required under the proper construction of “control component,” if the claimed power supply corresponds to Gregorio’s current generator 422.

118. Gregorio’s processor 12, which the petition relies on as the “control component,” is part of one embodiment, shown in overview form in Gregorio’s Figure 1; the processor’s functionality is illustrated as a flow diagram in Figure 3 and its digital or software-based implementation is described in connection with Figure 3.[89] Current generator 422, on the other hand, is part of an alternative embodiment, shown in the figure below[90]:

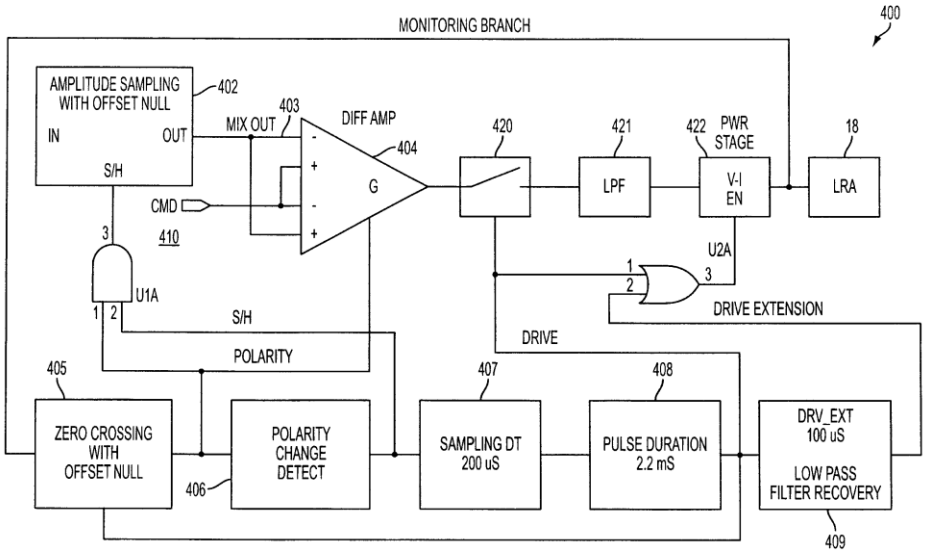

FIG. 4

[89] IPR2024-00806, Ex. 1004, Figs. 2, 3, 2:10-20, and 4:15-20.
[90] IPR2024-00806, Ex. 1004, Fig. 4.

119. Gregorio describes Figure 4 as follows[91]:

> FIG. 4 is a block diagram of a circuit 400 for generating the functionality of FIG. 3 for driving LRA 18 in accordance with one embodiment. In the embodiment of FIG. 4, the driving signal is generated primarily in hardware as opposed to FIG. 3 which can be generated by any combination of software (via module 22) or hardware.

120. In other words, whereas the primary embodiment of Figures 1 and 3 is a processor-based embodiment that can use software (stored in module 22), Figure 4 is an alternative embodiment that does not depend on software or use a processor; rather, Figure 4 implements the same "functionality" as figure 3 "primarily in hardware." As Figure 4 itself and the associated description make clear, the alternative embodiment of Figure 4 is entirely formed of analog circuitry and cannot comprise a processor.[92] The only input to this circuit is the "command" signal 410.[93] The petition does not discuss the command signal 410 or contend that command signal 410 is an output of the processor at all, much less an "output value p corresponding to the currently selected strength" or an "output p to the power supply," one or both of which is required under the proper means-plus-function construction.

121. As shown in Gregorio, the main input to current generator 422 comes from the low-pass filter 421; there is also an input corresponding to signal U2A, provided by an OR gate. The OR gate's inputs are connected to components 405, 408, 409, and 420. None of these are outputs from a processor.

122. Furthermore, a POSITA reviewing Gregorio's Figure 4 and the corresponding description would readily understand that there is no disclosed or obvious way to connect

---

[91] IPR2024-00806, Ex. 1004 at 4:66–5:4.
[92] IPR2024-00806, Ex. 1004 at 5:5–55.
[93] IPR2024-00806, Ex. 1004 at 5:5–6.

either input of current generator 422 to a processor with an algorithm as claimed in the ’820 patent.

123. The petition does not contend that Gregorio discloses any processor or algorithm that provides an “output value p corresponding to the currently selected strength” or an “output p to the power supply,” one or both of which is required under the proper means-plus-function construction if the claimed power supply corresponds to Gregorio’s actuator drive circuit 16.[94] Also, the means-plus-function construction requires at least two outputs from the control component, namely the output “d,” corresponding to the desired direction, as produced by the frequency timer, and the output “p” to the power supply. The petition does not and cannot show both of these outputs.

124. In ground 2A, the petition also asserts that, in the combined system of Gregorio-Ramsay-Rossi-Aldrich involves a step of “the user input provides a change in vibration strength (e.g., in accordance with Ramsay)” during a “monitoring period,” and “ the software executing on the microprocessor outputs a corresponding control signal to the power supply in accordance with the user unput [sic].”[95] This is conclusory and nonspecific and does not show any disclosure or obviousness. In my opinion, the combined system of Gregorio-Ramsay-Rossi-Aldrich does not teach the claimed output to the power supply. I also note that this statement appears to be identical to the contention about the different Wakuda-Ramsay-Rossi-Aldrich combination in IPR2024-00807, which I discuss below, confirming that this statement does specifically address the structural or algorithmic disclosures of either Gregorio-Ramsay-Rossi-Aldrich or Wakuda-Ramsay-Rossi-Aldrich.

---

[94] IPR2024-00806, Paper 3 at 16-18, 70-73.
[95] IPR2024-00806, Petition at 72.

125. Dr. Hannaford provides additional arguments regarding the output signals from the control component, which are not mentioned in the petition.[96] But these arguments do not change my conclusion. For example, Dr. Hannaford explains how the control component responds to user input in specific ways in order to produce the "directional signal d output to the H-bridge switch circuit" within his theory, but he does not provide any similar discussion of an output p to the power supply, as required.[97] In particular, the only thing he says about the algorithm for the output to the power supply is the same conclusory sentence from the petition: "the software executing on the microprocessor outputs a corresponding control signal to the power supply in accordance with the user unput [sic]."[98] This is non-specific and does not show any disclosure or obviousness.

126. Dr. Hannaford elsewhere states that "in the combined system, the software executed by the microprocessor receives user input adjusting the magnitude (e.g., height, frequency, etc.) of the waveform via a user interface, in accordance with Ramsay, thereby directing a change in vibration strength, and the control component changes the current provided from a power supply to the driving component. APPLE-1006, [0022]-[0026], [0030]-[0033], [0046], [0053]-[0055]."[99] This is a description of Ramsay's user interface, and the paragraphs cited in exhibit 1006 all relate solely to the user interface. Dr. Hannaford's statement about "the current provided from a power supply to the driving component" has nothing to do with Ramsay's disclosure. Dr. Hannaford has not shown that a POSITA would have found it obvious from Ramsay's teaching of a user interface to provide an output to the

[96] IPR2024-00806, Ex. 1003 ¶¶ 259-61.
[97] IPR2024-00806, Ex. 1003 ¶¶ 259-61.
[98] IPR2024-00806, Ex. 1003 ¶ 260.
[99] IPR2024-00806, Ex. 1003 ¶ 259.

Resonant Systems, Inc., Ex. 2009
Sony Interactive Entertainment Inc., etc. v. Resonant Systems, Inc., IPR2024-00807

power supply that changes the current provided, and if that is his implied opinion, I disagree.

127. Dr. Hannaford also states that "the current applied to the coil directly impacts the magnitude of the oscillations, implementing the user input directing a change in vibration strength."[100] He cites to an unremarkable statement that the force of an electromagnet depends on the current through it. This is not a disclosure of an output signal to a power supply. Dr. Hannaford has not shown that a POSITA would have found it obvious to implement the specific algorithmic and structural limitations of the '830 patent regarding a output p to the power supply (separate and apart from the output d), and if that is his implied opinion, I disagree.

2. Failure to Demonstrate Motivation to Modify Wakuda to satisfy [14] "flux paths comprising a paramagnetic material . . ." (Grounds 1B and 1E)

128. Claim 14 of the '830 patent requires the use of a "paramagnetic material."[101] For this limitation, the petition points to Figure 1B of Wakuda, which it annotates as shown below[102]:

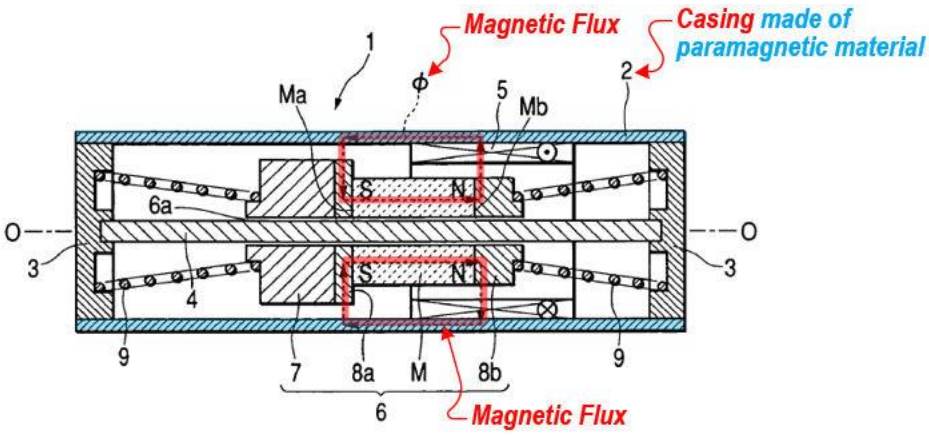

[100] IPR2024-00806, Ex. 1003 ¶ 259.
[101] '830 patent at 17:26–29.
[102] IPR2024-00806, Petition at 32, 53–54, 75–76.

129. But Wakuda does not mention paramagnetic materials. Instead, it describes the casing 2 and yoke members 8a and 8b as "magnetic."[103] The petition argues that a POSITA would have been motivated to use a paramagnetic material such as aluminum as the "magnetic" material of Wakuda and that Wakuda thereby renders this limitation obvious.

130. I disagree. To the contrary, evidence in Wakuda and in the documents cited by the '830 IPR petition demonstrate that a POSITA would have understood the category of "magnetic" materials in Wakuda excludes paramagnetic materials such as aluminum and would not have been motivated to replace Wakuda's magnetic material with a paramagnetic material.

131. First, the petition and Hannaford declaration point to exhibit 1032 as evidence that the class of paramagnetic materials are one of a limited number of types of "magnetic" materials.[104] But this document states that "**All** materials are magnetic in the sense that they are affected by magnetic fields" and that "all materials are diamagnetic," one of the three categories of "magnetic materials" listed in exhibit 1032.[105] It also states that "most applications of magnetic materials call for ferromagnetic materials," confirming that the categories in exhibit 1032 would not be seen by a POSITA as equally suitable for use in Wakuda's device.[106] Wakuda expressly calls for the use of both "a magnetic substance" and "a non-magnetic substance" for different elements of its Figure 1 design.[107] Thus a POSITA would understand that Wakuda does not consider all of the "magnetic materials"

[103] IPR2024-00806, Ex. 1005 at 4:35–36, 4:53–54.
[104] IPR2024-00806, Petition at 32, Ex. 1003, ¶ 155.
[105] IPR2024-00806, Ex. 1032.
[106] IPR2024-00806, Ex. 1032.
[107] IPR2024-00806, Ex. 1005 at 4:34–38, 4:48–54.

Resonant Systems, Inc., Ex. 2009
Sony Interactive Entertainment Inc., etc. v. Resonant Systems, Inc., IPR2024-00807

listed in exhibit 1032 to be "magnetic substances," as if diamagnetic materials were "magnetic" as Wakuda uses the term, then there would be no "non-magnetic substances."

132. Other documents cited in the petition makes clear that paramagnetic materials are commonly considered to be "non-magnetic." For example, exhibit 1037 listed five "major groups" of materials according to their magnetic behavior: diamagnetism, paramagnetism, ferromagnetism, ferrimagnetism, and antiferromagnetism.[108] The document then states: "Ferromagnetic and ferrimagnetic materials are usually what we consider as being magnetic (ie., behaving like iron). The remaining three are so weakly magnetic that they are usually thought of as 'nonmagnetic'."[109] In other words, paramagnetic materials are "usually thought of as 'nonmagnetic.'"

133. Apple's exhibit 1031 is a patent to Brooks.[110] In a paragraph that Dr. Hannaford quotes in part,[111] this patent states[112]:

> In applications where it is desired to ensure actuation times are as low as possible, the piston 92 is made of material having a suitably high ratio that is also ***non-magnetic***, non-ferrous ***and***, if desired, ***can be paramagnetic***. ***Aluminum***, copper and magnesium and alloys thereof are ***examples of suitable materials meeting these requirements***. Actuation time is advantageously optimized because a piston 92 ***made of a such a non-magnetic,*** non-ferrous ***material*** is not susceptible to any potentially acceleration reducing self-induction or solenoid effect, as would likely be the case if it were ferromagnetic.

[108] IPR2024-00806, Ex. 1037 at 1.
[109] IPR2024-00806, Ex. 1037 at 1.
[110] IPR2024-00806, Ex. 1031 at 1.
[111] IPR2024-00806, Ex. 1003, ¶ 155.
[112] IPR2024-00806, Ex. 1031 at 21:61–22:3.

134. This paragraph clearly refers to paramagnetic materials—and to aluminum specifically—as "non-magnetic."

135. Wakuda Figure 1B and the associated specification text would provide a POSITA with further reasons not to be motivated to use a paramagnetic material such as aluminum to implement the teachings of Wakuda, as illustrated further in the McLyman textbook cited by the petition. If a magnet like the magnet M of Wakuda is located away from magnetic materials, it will have a dipole magnetic field with magnetic flux lines filling the surrounding air in all directions[113]:

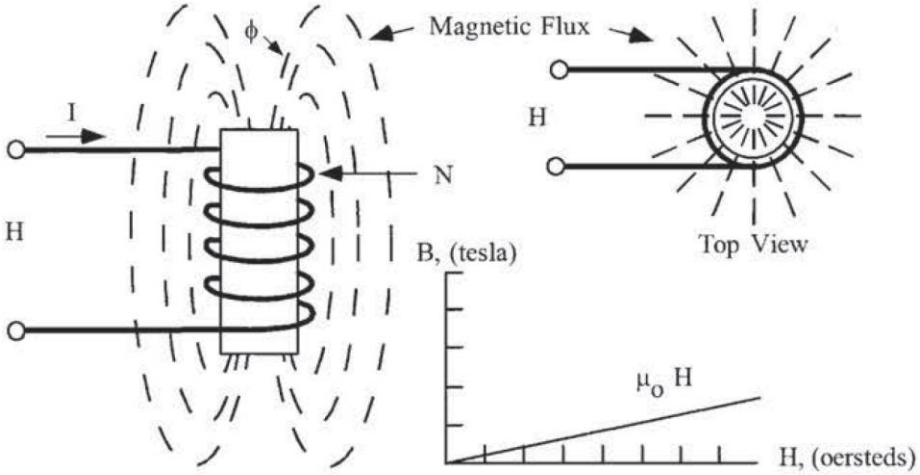

Figure 1-10. Air-Core Coil Emitting Magnetic Flux when Excited.

136. If a yoke of magnetic material is formed that connects the north of south poles of the magnet, the magnetic field and associated flux lines will be concentrated within that magnetic material, much it is shown to be concentrated in the magnetic core of McLyman Figure 1-11[114]:

[113] IPR2024-00806, Ex. 1012 at 27.
[114] IPR2024-00806, Ex. 1012 at 27.

Resonant Systems, Inc., Ex. 2009
Sony Interactive Entertainment Inc., etc. v. Resonant Systems, Inc., IPR2024-00807

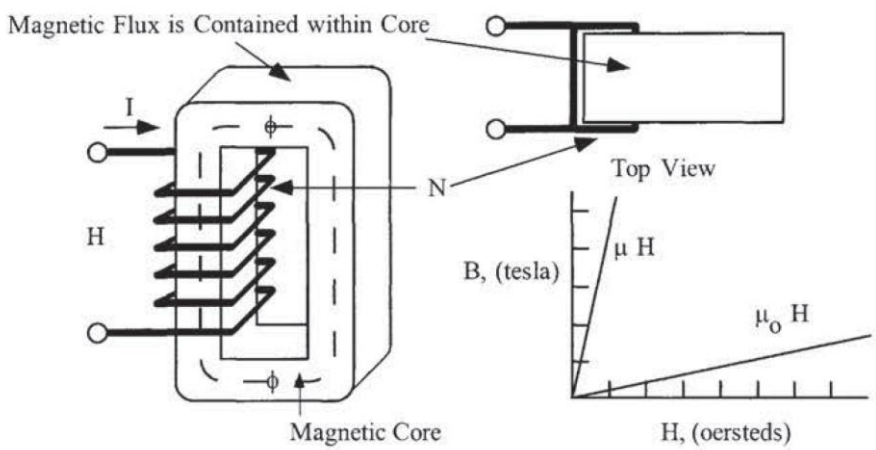

Figure 1-11. Introduction of a Magnetic Core.

137. While Wakuda differs in having a permanent magnet instead of the electromagnet of these McLyman figures and in having air gaps, the same basic effect of flux lines concentrating in the magnetic material is show in Wakuda Figure 1B [115]:

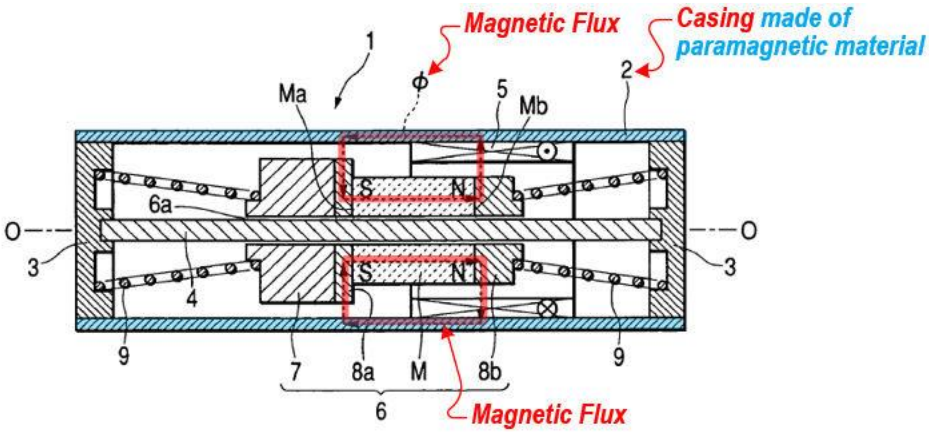

138. In order to dramatically change the magnetic field from that produced by the magnet alone, as shown in the change from McLyman Figure 1-10 to 1-11, the magnetic material of the core or yoke must produce a substantial magnetic field, as I explain further in my background section above.

[115] IPR2024-00806, Petition at 32.

Resonant Systems, Inc., Ex. 2009
Sony Interactive Entertainment Inc., etc. v. Resonant Systems, Inc., IPR2024-00807

139. As this figure is drawn, showing strong bending of the magnetic field lines into the casing, it is clearly represented as ferromagnetic, as discussed above. A paramagnetic material would not so strongly bend the lines. Furthermore Wakuda states that the casing forms the magnetic circuit, and thus must bend and guide the magnetic field lines[116]:

> In the embodiment shown in FIG. 1, the end surface Mb assumes the N pole and the end surface Ma assumes the S pole. In this case, magnetic flux φ generated by the magnet M are output through one of the yoke members **8***b* in an outer peripheral direction to traverse the coil **5** perpendicularly to reach the casing **2**. Further, the magnetic flux φ form a magnetic path, along which the flux pass inside the casing **2** made of a magnetic substance to be conducted to a position opposed to the other of the yoke members **8***a*, and are output toward the yoke member **8***a* from the position to reach the S pole of the magnet M.

140. Thus replacing the casing with a paramagnetic material would result in the device not working, according to Wakuda's design.

141. The magnetic field within a material is described by the following formula (in the CGS system of units)[117]:

$$B=H+4\pi M$$

142. Here, the magnetic induction B equals the sum of the magnetic field H produced by sources outside the material and a term reflecting the magnetization M of the material.[118]

[116] IPR2024-00806, Ex. 1005 at 5:54–64.
[117] IPR2024-00806, Ex. 1037 at 14.
[118] IPR2024-00806, Ex. 1037 at 12–14.

The ratio of B/H, called the "permeability," is a measure of how much the magnetic B field is affected by the magnetic response of the material.[119] As McLyman explains[120]:

> Most materials are poor conductors of magnetic flux; they have low permeability. ***A vacuum has a permeability of 1.0, and nonmagnetic materials, such as air, paper, and copper have permeabilities of the same order.*** There are a few materials, such as ***iron, nickel, cobalt, and their alloys that have high permeability, sometimes ranging into the hundreds of thousands.*** To achieve an improvement over the air-coil, as shown in Figure 1-10, a magnetic core can be introduced, as shown in Figure 1-11. ***In addition to its high permeability***, the advantages of the magnetic core over the air-core are that the magnetic path length (MPL) is well-defined, ***and the flux is essentially confined to the core***, except in the immediate vicinity of the winding.

143. As this explains, a permeability substantially greater than 1 (i.e., in the thousands) is needed to confine the flux, like what is illustrated in McLyman Figure 1-11 or Wakuda Figure 1B. To understand where the properties of aluminum place it in this discussion from McLyman, we can determine its permeability. In the CGS units used in McLyman, the permeability can be written in terms of susceptibility κ[121]:

$$\frac{B}{H} = 1 + 4\pi\kappa$$

144. The CGS susceptibility of solid aluminum is 16.5×10^{-6}, making the permeability $1+4\pi\kappa$ approximately 1.000022,[122] and making it one of the "non-magnetic materials" with

[119] IPR2024-00806, Ex. 1037 at 14.
[120] IPR2024-00806, Ex. 1012 at 27.
[121] Follows from IPR2024-00806, Ex. 1037 at 14.
[122] The table in https://en.wikipedia.org/wiki/Permeability_(electromagnetism) agrees.

Resonant Systems, Inc., Ex. 2009
Sony Interactive Entertainment Inc., etc. v. Resonant Systems, Inc., IPR2024-00807

"permeabilities of the same order" as 1.0, according to McLyman.[123] Importantly, the magnetization due to paramagnetism in aluminum will only alter the magnetic B field by around 0.002% of the value that field would have in a vacuum. A POSITA would recognize that such a weak effect would not alter the magnetic flux lines from McLyman Figure 1-10 to be concentrated as in McLyman Figure 1-11, and it would not produce the magnetic flux paths confined to the magnetic material as shown in Wakuda Figure 1B.

145. A POSITA seeking to apply the teachings of Wakuda Figure 1B would not be motivated to use a paramagnetic material such as aluminum in place of the magnetic material taught by Wakuda. Accordingly, the combination of Gregario with Wakuda does not render claim 14 obvious. Because the petition points to no teachings of Ramsay, Rossi, or Aldrich that would suggest using a paramagnetic material, the combinations under Grounds 1E and 2B also do not render claim 14 obvious.[124]

C. '337 IPR (IPR2024-00807)

1. Failure to Satisfy Both 2[c] "power supply" and 2[f] "control component" (Ground 1)

146. Claim 2 of the '337 patent requires a "power supply" and, under the proper means-plus-function construction of the "control component" term, a control component that includes steps corresponding to steps 760 and 762, including in particular a step to "provide

[123] IPR2024-00806, Ex. 1012 at 27.
[124] IPR2024-00806, Petition at 1, 53–54, 75–76

Resonant Systems, Inc., Ex. 2009
Sony Interactive Entertainment Inc., etc. v. Resonant Systems, Inc., IPR2024-00807

a corresponding output to the power supply." I discuss the proper construction of the "control component" of this term above.

147. For Ground 1, Petitioner contends that "a POSITA would have understood and found obvious that Wakuda's system includes a power supply," as shown in the annotated illustration from the petition below[125]:

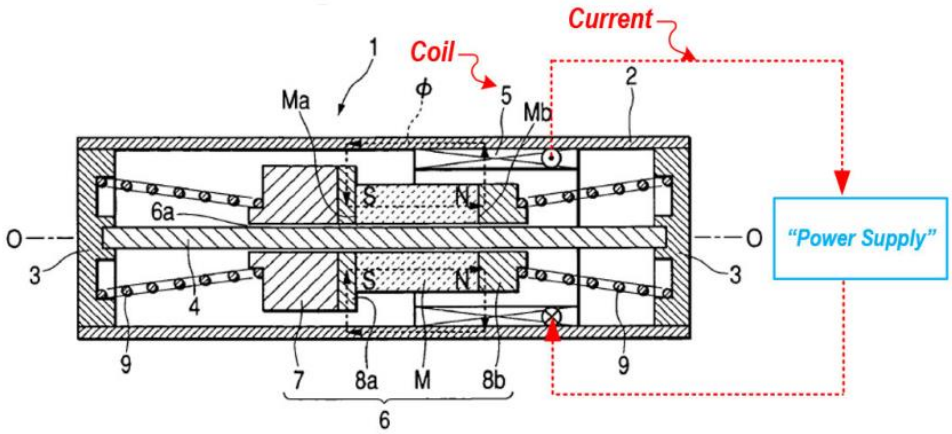

148. The petition further contends that the power supply is connected to Wakuda's "drive means," as shown in the annotated illustration from the petition below[126]:

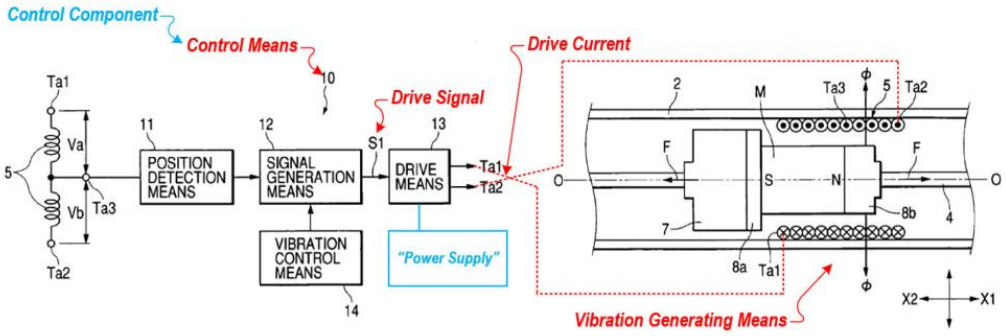

149. This does not show an "output value p corresponding to the currently selected strength" or an "output p to the power supply," one or both of which is required under the

[125] IPR2024-00807, Petition at 16, 25 (cross-reference from claim 2 to claim 1].
[126] IPR2024-00807, Petition at 18, 25 (cross-reference from claim 2 to claim 1].

proper means-plus-function construction. In the petition's own illustration, the control component provides a signal to the control means, which provides a signal to the signal generation means, which provides a drive signal to the drive means 13. This is consistent with Wakuda's disclosure. A POSITA reading Wakuda would readily understand Wakuda's teaching to use a single drive signal to control both the frequency and amplitude of the vibration of the vibration generating means, by controlling whether the drive signal

Resonant Systems, Inc., Ex. 2009
Sony Interactive Entertainment Inc., etc. v. Resonant Systems, Inc., IPR2024-00807

is in-phase ("accumulation signal") or out-of-phase ("damping signal") with the vibrational waveform. This is illustrated, for example, in Wakuda's figures 4 and 5, shown below[127]:

FIG. 4

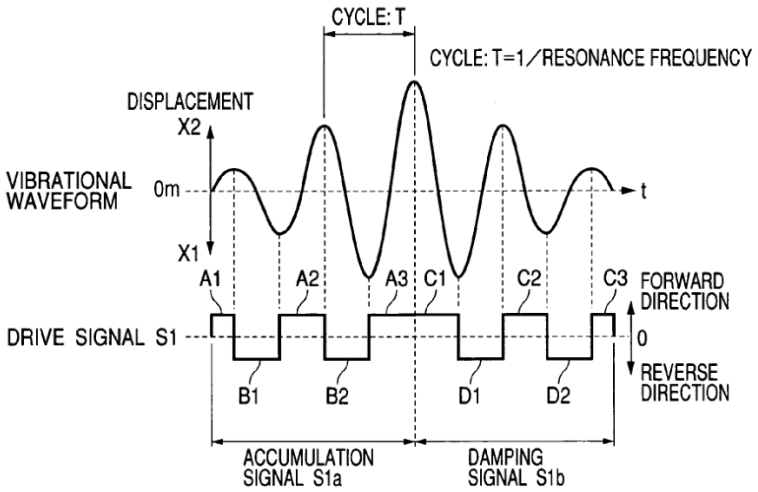

FIG. 5

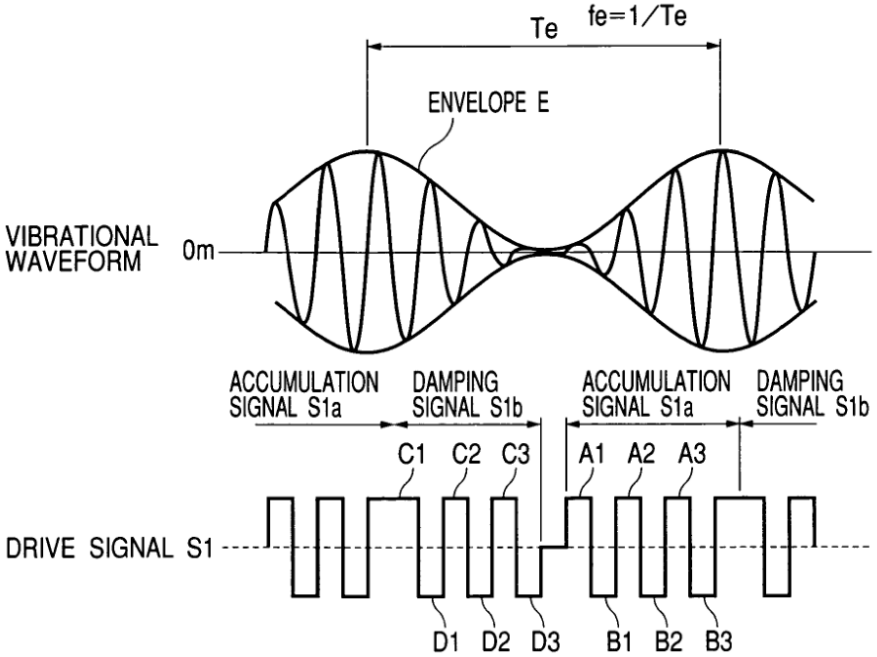

150. Based on this, a POSITA would similarly recognize that Wakuda does not disclose, and does not require, a separate signal d from the control component to the power supply, either directly or indirectly. This is in contrast to the teaching of the ’337 Patent, and the requirement under the correct means-plus-function construction, of both a directional output d (corresponding to Wakuda’s drive signal) and a separate output p to the power supply (which has no counterpart in Wakuda).

151. In its Institution Decision, the Board noted that “drive means 13… receive[s] drive signal S1, which ‘switch[es] . . . current direction,’ based on control via signal generation means 12, and suppl[ies] the desired drive current/power to Wakuda’s vibration generating coil 5.”[128] This is consistent with, and supports, my opinion that Wakuda teaches a single drive signal S1 to drive means 13 to control both direction and current/power, and not a second signal p to the power supply as taught and required by the ’337 patent.

152. Likewise, the Board noted on the preliminary record that “Petitioner generally reasons that using Wakuda’s drive signal to control the power supply allows the user to control various haptic effects.”[129] This statement is also consistent with my opinion regarding Wakuda. As I discuss in the previous paragraphs, Wakuda teaches a drive signal to the drive means to switch the direction of the current supplied by the power supply to the coil, which is sufficient, in the context of the purported obviousness combination, to control the haptic effects. The ’337 patent, on the other hand, teaches an additional output to the power supply itself, which is not disclosed or rendered obvious by Wakuda, either alone or in combination.

---

[127] IPR2024-00807, Ex. 1005 Figs. 4 and 5.
[128] IPR2024-00807, Paper 10 at 28.
[129] IPR2024-00807, Paper 10 at 30.

2. Failure to Satisfy Both 2[c] "power supply" and 2[f] "control component" (Ground 2)

153. In Ground 2, the petition relies on the same disclosure of a power supply as in Ground 1A.[130] My corresponding opinions about Ground 1A also apply.

154. The main addition in Ground 2 is the addition of Rossi's purported disclosure of an H-bridge switch, presumably implementing Wakuda's drive means 13.[131] The petition states that "a control signal is output from the processor to a transistor of the H-bridge switch to control whether the transistor is in an open or closed state, providing the direction signal… In the resulting system, the switch receives a directional signal (e.g., at "IN1") that selects a corresponding direction of the opposite directions in which the driving component drives the moveable component."[132]

155. In the purported combination, it is thus clear that the *only* control signal is a directional signal that selects a direction of current flow. This is not an output to the power supply as required under any proper means-plus-function construction of "control component." The addition of Rossi further confirms my analysis of Ground 1A above that a POSITA would recognize that Wakuda teaches only a single control signal to the H-bridge switch, without the separate output to the power supply taught and required by the '337 patent.

156. In Ground 2, the petition also asserts that, in the combined system of Wakuda-Ramsay-Rossi-Aldrich involves a step of "the user input provides a change in vibration

[130] IPR2024-00807, Petition at 39.
[131] IPR2024-00807, Petition at 39.
[132] IPR2024-00807, Petition at 39.

Resonant Systems, Inc., Ex. 2009
Sony Interactive Entertainment Inc., etc. v. Resonant Systems, Inc., IPR2024-00807

strength (e.g., in accordance with Ramsay)" during a "monitoring period," and "the software executing on the microprocessor outputs a corresponding control signal to the power supply in accordance with the user unput [sic]."[133] This is conclusory and nonspecific and does not show any disclosure or obviousness. In my opinion, the combined system of Gregorio-Ramsay-Rossi-Aldrich does not teach the claimed output to the power supply. I also note that this statement appears to be identical to the contention about the different Gregorio-Ramsay-Rossi-Aldrich combination in IPR2024-00806, which I discuss above, confirming that this statement does specifically address the structural or algorithmic disclosures of either Gregorio-Ramsay-Rossi-Aldrich or Wakuda-Ramsay-Rossi-Aldrich.

157. Dr. Hannaford provides additional arguments regarding the output signals from the control component, which are not mentioned in the petition.[134] But these arguments do not change my conclusion. For example, Dr. Hannaford explains how the control component responds to user input in specific ways in order to produce the "directional signal d output to the H-bridge switch circuit" within his theory, but he does not provide any similar discussion of an output p to the power supply, as required.[135] In particular, the only thing he says about the algorithm for the output to the power supply is the same conclusory sentence from the petition: "the software executing on the microprocessor outputs a corresponding control signal to the power supply in accordance with the user unput [sic]."[136] This is nonspecific and does not show any disclosure or obviousness.

---

[133] IPR2024-00807, Petition at 47.
[134] IPR2024-00807, Ex. 1003 ¶¶ 186-88. *See also* IPR2024-00806, Ex. 1003 ¶¶ 259-61.
[135] IPR2024-00807, Ex. 1003 ¶ 188.
[136] IPR2024-00807, Ex. 1003 ¶ 187.

158. Dr. Hannaford elsewhere states that "in the combined system, the software executed by the microprocessor receives user input adjusting the magnitude (e.g., height, frequency, etc.) of the waveform via a user interface, in accordance with Ramsay, thereby directing a change in vibration strength, and the control component changes the current provided from a power supply to the driving component. APPLE-1006, [0022]-[0026], [0030]-[0033], [0046], [0053]-[0055]."[137] This is a description of Ramsay's user interface, and the paragraphs cited in exhibit 1006 all relate solely to the user interface. Dr. Hannaford's statement about "the current provided from a power supply to the driving component" has nothing to do with Ramsay's disclosure. Dr. Hannaford has not shown that a POSITA would have found it obvious from Ramsay's teaching of a user interface to provide an output to the power supply that changes the current provided, and if that is his implied opinion, I disagree.

159. Dr. Hannaford also states that "the current applied to the coil directly impacts the magnitude of the oscillations, implementing the user input directing a change in vibration strength."[138] He cites to an unremarkable statement that the force of an electromagnet depends on the current through it. This is not a disclosure of an output signal to a power supply. Dr. Hannaford has not shown that a POSITA would have found it obvious to implement the specific algorithmic and structural limitations of the '337 patent regarding a output p to the power supply (separate and apart from the output d), and if that is his implied opinion, I disagree.

[137] IPR2024-00807, Ex. 1003 ¶ 186.
[138] IPR2024-00807, Ex. 1003 ¶ 186.

Resonant Systems, Inc., Ex. 2009
Sony Interactive Entertainment Inc., etc. v. Resonant Systems, Inc., IPR2024-00807

160. As I explain above, the teachings of Wakuda and Rossi clearly explain how this combination would work, and it would not work by outputting a control signal to the power supply. This sentence in the petition also cites several paragraphs from Dr. Hannaford discussing user interface teachings entirely unrelated to either Wakuda or Rossi or to the proposed combination.[139]

3. Failure to Satisfy Both 2[c] "power supply" and 2[f] "control component" (Grounds 3A, 3B)

161. For the "power supply" and "control component" limitations, Ground 3A of the petition relies on the teachings of Gregorio, and Ground 3B relies on the Ground 3A analysis.[140] In contrast to Ground 2 and with Ground 2A of the IPR2024-00806 petition, neither Ground 3A nor Ground 3B contends that the processor is programmed with the algorithm described in Figures 7A-7C of the '337 patent under the means-plus-function construction.[141]

162. For the claimed "power supply," the petition asserts that "a person of ordinary skill in the art (POSITA) would have understood that actuator drive circuit 16 corresponds to, or is coupled to, a power supply," and further notes that "Gregorio also describes 'current

[139] IPR2024-00807, Petition at 47 (citing Ex. 1003 ¶¶ 186-88).
[140] IPR2024-00807, Petition at 59-60, 62-64, 70.
[141] *Compare* IPR2024-00807, Petition at 62-64 *with* IPR2024-00807, Petition at 40.

generator 422' as a power supply to convert a pulse to current that flows into LRA 18."[142]

The petition provides the following annotated illustration[143]:

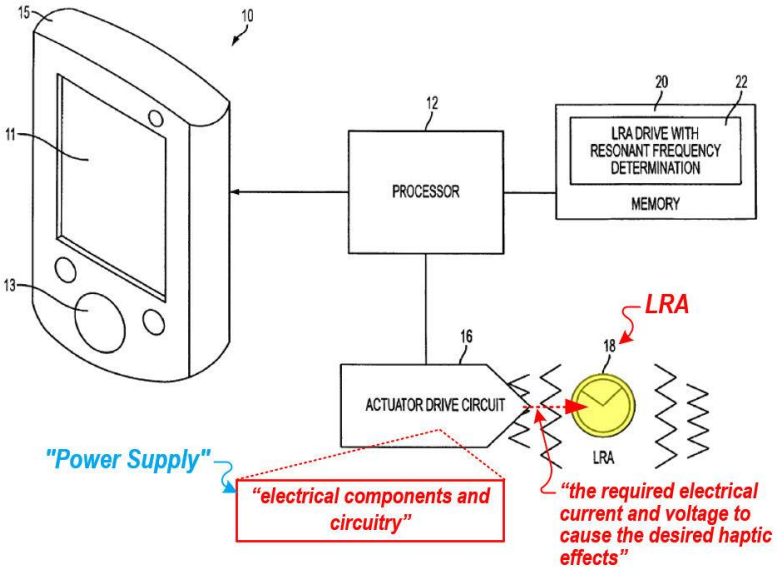

163. For the claimed "control component," the petition relies on Gregorio's "processor 12" and "memory 20," as shown in the following annotated illustration[144]:

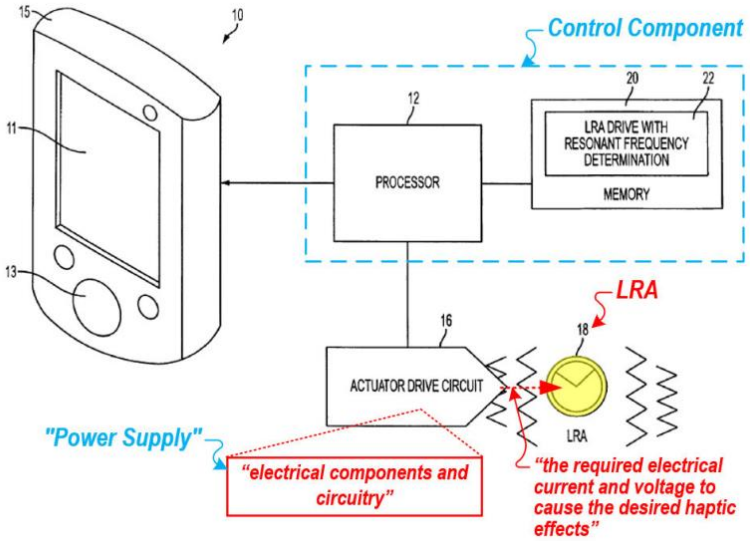

[142] IPR2024-00807, Petition at 60.
[143] IPR2024-00807, Petition at 60.
[144] IPR2024-00807, Petition at 63.

164. For the first theory of the power supply, "that "a person of ordinary skill in the art (POSITA) would have understood that actuator drive circuit 16 corresponds to, or is coupled to, a power supply," Petitioner concedes directly in that statement that drive circuit 16 may not be a power supply, let alone one that receives a signal, as required by the claim. Gregorio never uses the words "power supply." In fact a POSITA would recognize in the above drawing that a power supply is required that is not shown. That that unshown power supply receives a signal from the processor is a sweeping conclusion that does not follow from any obviousness argument.

165. For the second theory of the power supply that it is current generator 422, it is clearly shown in the figure as a dumb voltage-to-current converter (in fact it appears labeled as such, "V-I," where V-I appears to directly refer to voltage-current converter.[145] The petition does not and cannot show that current generator 422 receives any input from a processor executing an algorithm as claimed in the '337 patent. Correspondingly, the petition does not and cannot show any processor or algorithm that provides a corresponding output to the power supply, as required under the proper construction of "control component," if the claimed power supply corresponds to Gregorio's current generator 422.

166. Gregorio's processor 12, which the petition relies on as the "control component," is part of one embodiment, shown in overview form in Gregorio's Figure 1; the processor's functionality is illustrated as a flow diagram in Figure 3 and its digital or software-based

[145] IPR2024-00807, Ex. 1004, Fig. 4 and 4:66–5:4

Resonant Systems, Inc., Ex. 2009
Sony Interactive Entertainment Inc., etc. v. Resonant Systems, Inc., IPR2024-00807

implementation is described in connection with Figure 3.[146] Current generator 422, on the other hand, is part of an alternative embodiment, shown in the figure below[147]:

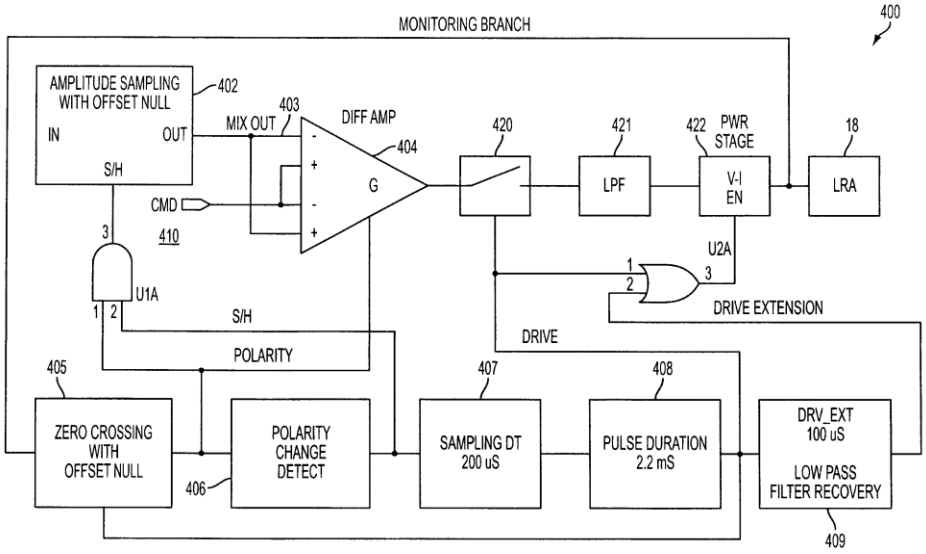

FIG. 4

167. Gregorio describes Figure 4 as follows[148]:

> FIG. 4 is a block diagram of a circuit 400 for generating the functionality of FIG. 3 for driving LRA 18 in accordance with one embodiment. In the embodiment of FIG. 4, the driving signal is generated primarily in hardware as opposed to FIG. 3 which can be generated by any combination of software (via module 22) or hardware.

168. In other words, whereas the primary embodiment of Figures 1 and 3 is a processor-based embodiment that can use software (stored in module 22), Figure 4 is an alternative embodiment that does not depend on software or use a processor; rather, Figure 4 implements the same "functionality" as figure 3 "primarily in hardware." As Figure 4 itself and

[146] IPR2024-00807, Ex. 1004, Figs. 2, 3, 2:10-20, and 4:15-20.
[147] IPR2024-00807, Ex. 1004, Fig. 4.
[148] IPR2024-00807, Ex. 1004 at 4:66–5:4.

Resonant Systems, Inc., Ex. 2009
Sony Interactive Entertainment Inc., etc. v. Resonant Systems, Inc., IPR2024-00807

the associated description make clear, the alternative embodiment of Figure 4 is entirely formed of analog circuitry and cannot comprise a processor.[149] The only input to this circuit is the "command" signal 410.[150] The petition does not discuss the command signal 410 or contend that command signal 410 is an output of the processor at all, much less an "output value p corresponding to the currently selected strength" or an "output p to the power supply," one or both of which is required under the proper means-plus-function construction.

169. As shown in Gregorio, the main input to current generator 422 comes from the low-pass filter 421; there is also an input corresponding to signal U2A, provided by an OR gate. The OR gate's inputs are connected to components 405, 408, 409, and 420. None of these are outputs from a processor.

170. Furthermore, a POSITA reviewing Gregorio's Figure 4 and the corresponding description would readily understand that there is no disclosed or obvious way to connect either input of current generator 422 to a processor with an algorithm as claimed in the '337 patent.

171. The petition does not contend that Gregorio discloses any processor or algorithm that provides an "output value p corresponding to the currently selected strength" or an "output p to the power supply," one or both of which is required under the proper means-plus-function construction if the claimed power supply corresponds to Gregorio's actuator drive circuit 16.[151] Also, the means-plus-function construction requires at least two outputs from the control component, namely the output "d," corresponding to the desired direction,

[149] IPR2024-00807, Ex. 1004 at 5:5–55.
[150] IPR2024-00807, Ex. 1004 at 5:5–6.
[151] IPR2024-00807, Petition at 62-64.

Resonant Systems, Inc., Ex. 2009
Sony Interactive Entertainment Inc., etc. v. Resonant Systems, Inc., IPR2024-00807

as produced by the frequency timer, and the output "p" to the power supply. The petition does not and cannot show both of these outputs.

172. Ground 3B relies on the same analysis of 2[c] and 2[f] as Ground 3A, and my opinions about Ground 3A also apply.[152]

4. Failure to Satisfy Both 2[c] "power supply" and 2[f] "control component" (Ground 4A)

173. Ground 4A claims to rely on the same analysis of 2[c] and 2[f] as Ground 2 and Ground 3A, and my corresponding opinions about Ground 2 and Ground 3A also apply.[153]

5. Failure to Satisfy Both 2[c] "power supply" and 2[f] "control component" (Ground 4B)

174. Ground 4A claims to rely on the same analysis of 2[c] and 2[f] as Ground 2 and Ground 3B, and my corresponding opinions about Ground 2 and Ground 3B also apply.[154]

X. CONCLUSION

175. In signing this declaration, I understand that the declaration will be filed as evidence in proceedings before the Patent Trial and Appeal Board of the United States Patent and Trademark Office. I acknowledge that I may be subject to cross-examination in the case and that cross-examination will take place within the United States. If cross-examination is required of me, I will appear for cross-examination within the United States during the time allotted for cross-examination.

176. I declare under penalty of perjury under the laws of the United States of America that the foregoing is true and correct and that all statements made herein of my knowledge are true and that all statements made on information and belief are believed to be true; and

---

[152] IPR2024-00807, Petition at 70.
[153] IPR2024-00807, Petition at 79.
[154] IPR2024-00807, Petition at 80.

further, that these statements were made with knowledge that willful false statements and the like so made are punishable by fine or imprisonment, or both, under 18 U.S.C. § 1001.

Executed on February 7, 2025 // _____

Keith W. Goossen, Ph.D.

Resonant Systems, Inc., Ex. 2009
Sony Interactive Entertainment Inc., etc. v. Resonant Systems, Inc., IPR2024-00807