John Caldwell

TI Precision Designs: Verified Design

Analog Pulse Width Modulation

TI Precision Designs

TI Precision Designs are analog solutions created by TI's analog experts. Verified Designs offer the theory, component selection, simulation, complete PCB schematic & layout, bill of materials, and measured performance of useful circuits. Circuit modifications that help to meet alternate design goals are also discussed.

Circuit Description

This circuit utilizes a triangle wave generator and comparator to generate a pulse-width-modulated (PWM) waveform with a duty cycle that is inversely proportional to the input voltage. An op amp and comparator generate a triangular waveform which is passed to the inverting input of a second comparator. By passing the input voltage to the non-inverting comparator input, a PWM waveform is produced. Negative feedback of the PWM waveform to an error amplifier is utilized to ensure high accuracy and linearity of the output

Design Resources

Design Archive	All Design files
TINA-TI™	SPICE Simulator
OPA2365	Product Folder
TLV3502	Product Folder
REF3325	Product Folder

TI E2E™ Community

Ask The Analog Experts
WEBENCH® Design Center
TI Precision Designs Library

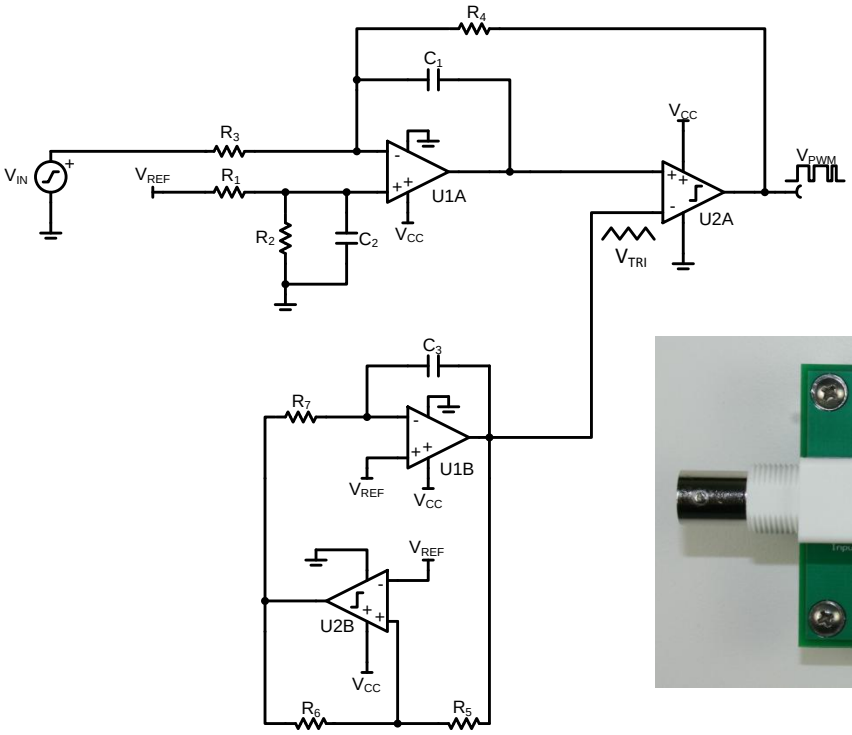

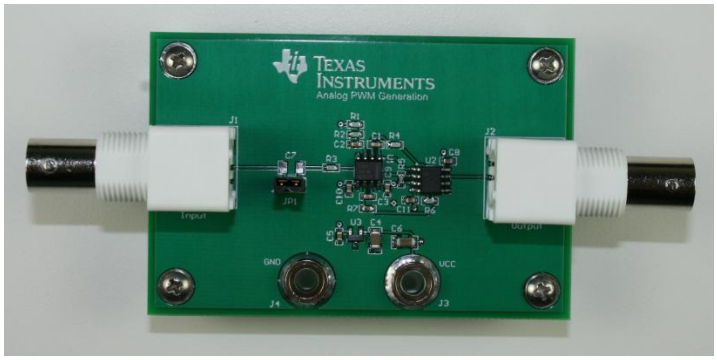

An IMPORTANT NOTICE at the end of this TI reference design addresses authorized use, intellectual property matters and other important disclaimers and information.

TINA-TI is a trademark of Texas Instruments
WEBENCH is a registered trademark of Texas Instruments

Copyright © 2013, Texas Instruments Incorporated

Resonant Systems, Inc., Ex. 2017
Sony Interactive Entertainment Inc., etc. v. Resonant Systems, Inc., IPR2024-000807

1 Design Summary

The design requirements are as follows:

- Supply voltage: 5 Vdc
- Input voltage: -2 V to +2 V, dc coupled
- Output: 5 V, 500 kHz PWM
- Ideal transfer function: $V_O = (-1 * V_{IN}) + 2.5\ V$

The design goals and performance are summarized in Table 1.

Table 1: Design goals and performance summary.

	Goals	Simulated	Measured
THD (1 Vrms, 1 kHz)	0.1%	NA	0.009%
Offset Error (%)	5%	2.324%	0.108%
Gain Error (%)	5%	4.5%	0.22%

Figure 1 depicts the operation of the circuit. An input waveform is converted to a 5 Vp, 500 kHz PWM waveform. The duty cycle of the waveform is inverted from the input signal.

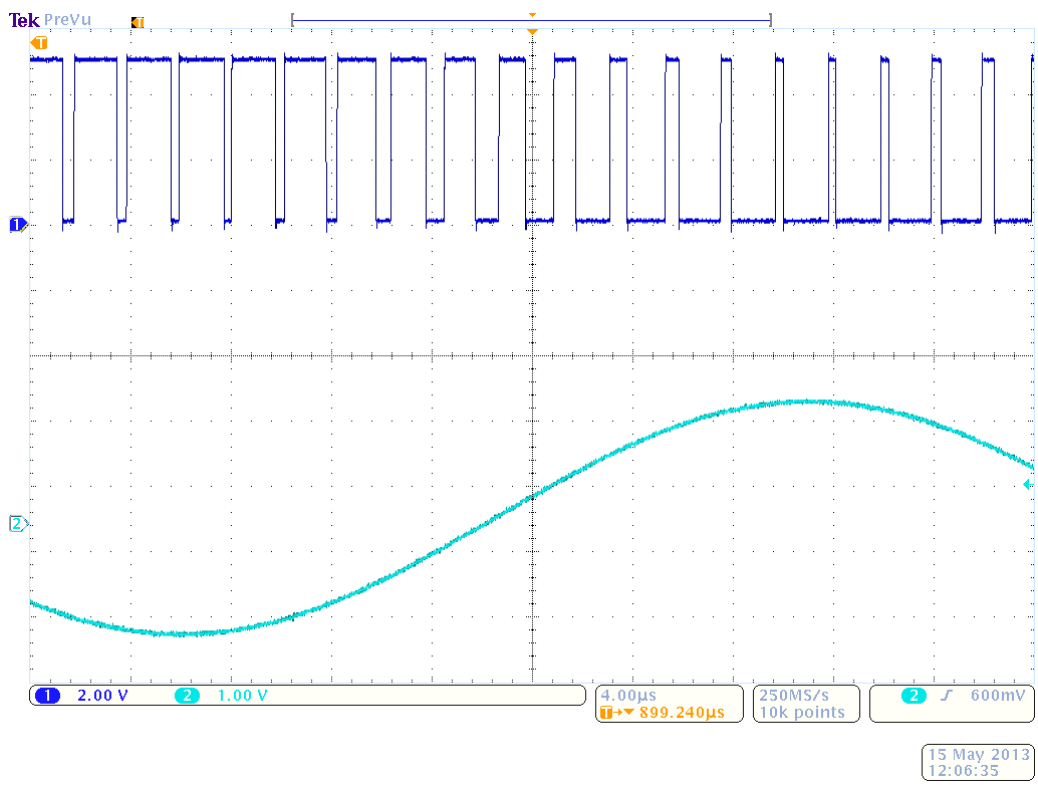

Figure 1: Actual PWM output (top) for a 20 kHz, 1.5 Vp input sine wave (bottom).

Copyright © 2013, Texas Instruments Incorporated
Resonant Systems, Inc., Ex. 2017
Sony Interactive Entertainment Inc., etc. v. Resonant Systems, Inc., IPR2024-000807

2 Theory of Operation

Lowpass filtering a PWM waveform produces an output voltage that follows the function:

$$V_O = \delta * V_{PWM} \tag{1}$$

Where V_O is the averaged output voltage, δ is the duty cycle of the PWM waveform, and V_{PWM} is its amplitude. For example, a 5 V PWM waveform with a duty cycle of 75% would produce an output voltage of 3.75 V when lowpass filtered. This concept is extremely useful in many applications such as Class-D audio amplifiers, switching power supplies, optical transmission, and conveying analog information through digital isolation. This circuit's operation can be better understood by breaking it into three parts: a comparator, an error amplifier, and a triangle wave generator.

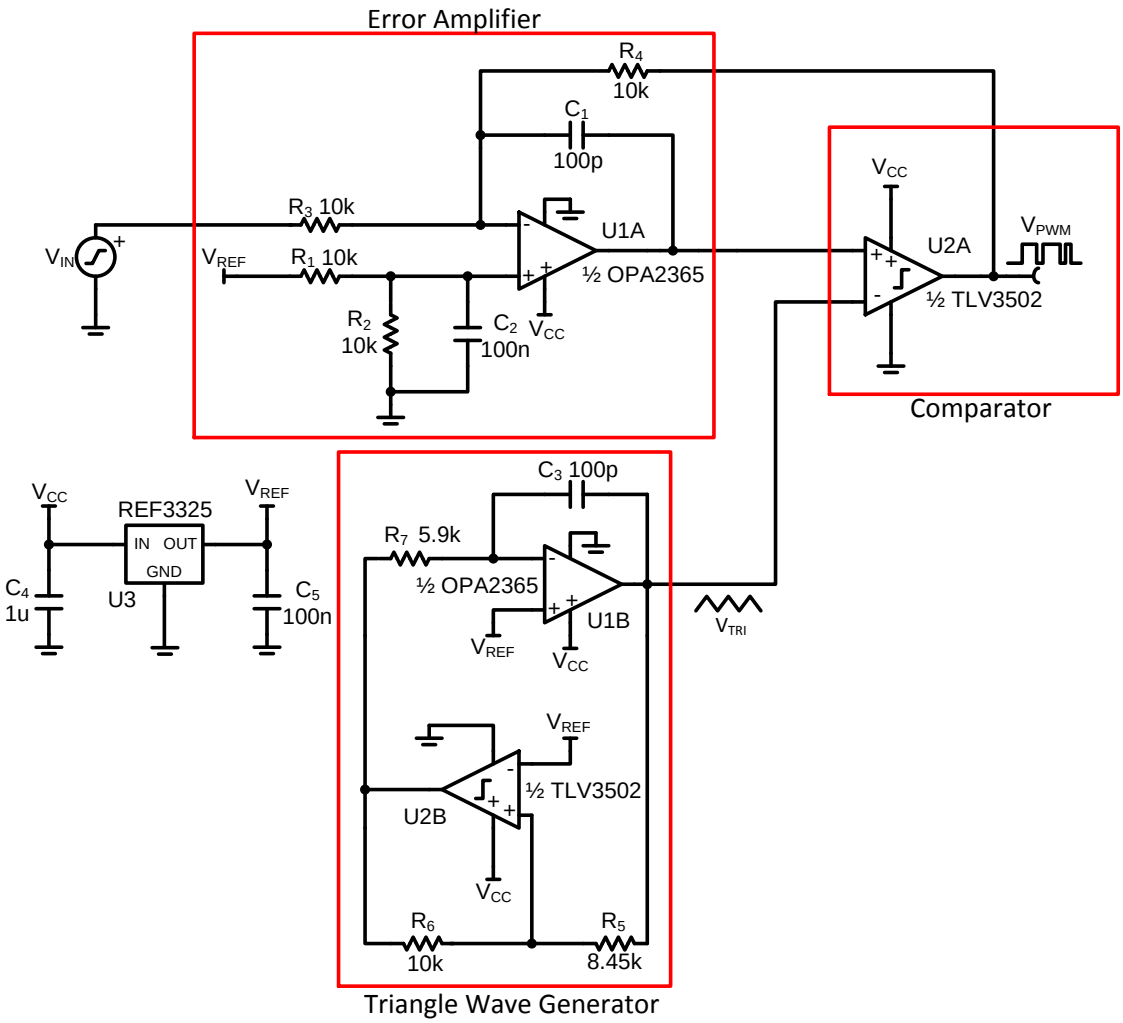

Figure 2: Complete circuit schematic with functional portions highlighted.

Copyright © 2013, Texas Instruments Incorporated
Resonant Systems, Inc., Ex. 2017
Sony Interactive Entertainment Inc., etc. v. Resonant Systems, Inc., IPR2024-000807

2.1 Output Comparator Function

The operation of the output comparator (one half of dual comparator U2) is best understood graphically. Figure 3 depicts the two inputs to the comparator (top, triangle and sine wave) as well as the output (bottom). The triangle wave is applied to the negative input of the comparator. The sinusoid represents a signal applied to the positive input of the comparator. Notice that when the value of the triangle wave is greater than the value of the input signal, the output of the comparator is low. Conversely, when the value of the input signal is greater than that of the triangle wave, the output of the comparator is high. This simple method produces an output square wave with a duty cycle that varies depending on an input voltage.

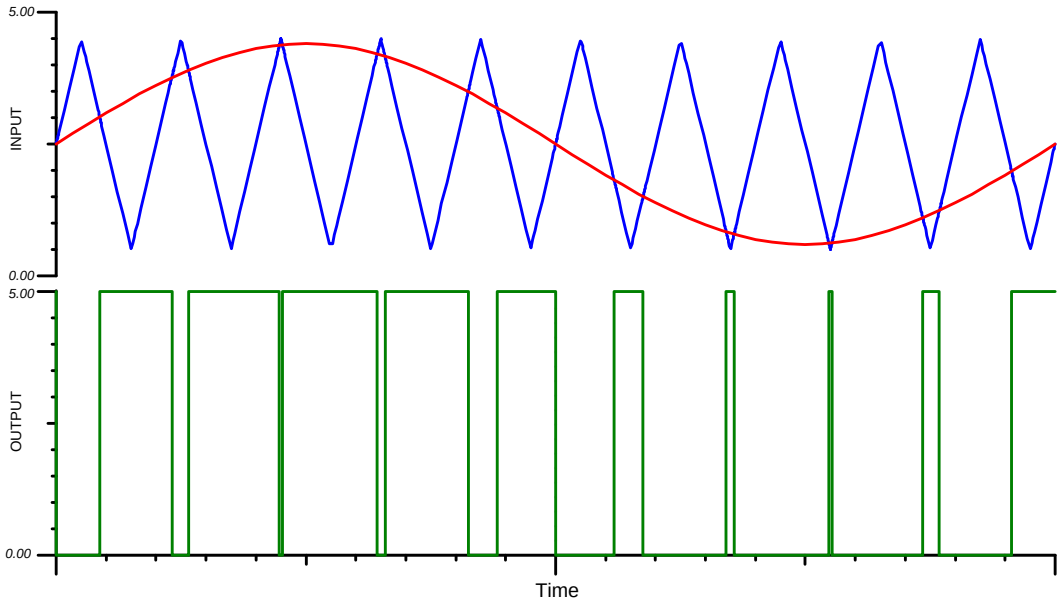

Figure 3: The output of a comparator (green) with a triangle wave applied to its negative input (blue) and a sine wave applied to its positive input (red).

A.1 Error Amplifier Design

The error amplifier, composed of one half of the dual op amp U1, serves two purposes. First, the error amplifier accommodates feedback of the output PWM waveform in order to correct for any errors in the output voltage introduced by the comparator. Second, it adds a dc offset to the input voltage so that negative input voltages can be accommodated by the circuit.

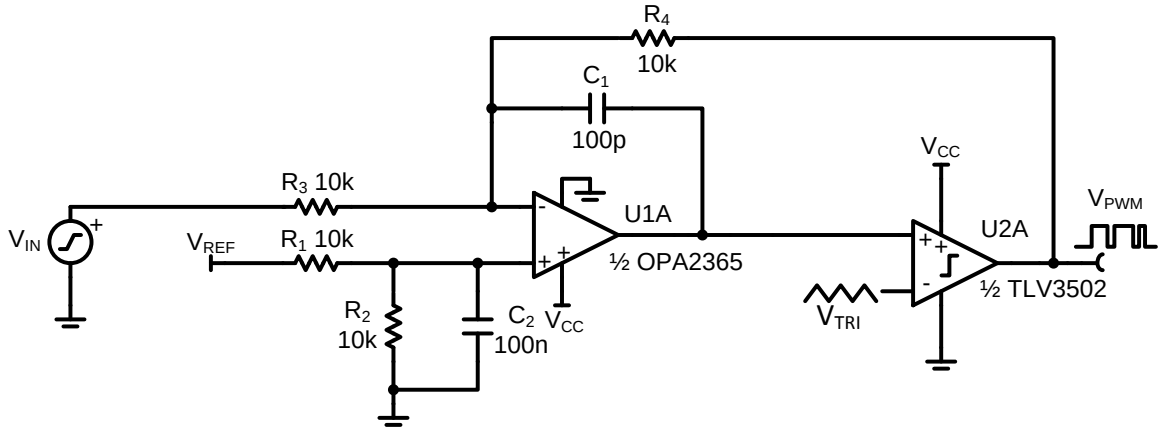

Figure 4: The error amplifier and output comparator with calculated component values.

Copyright © 2013, Texas Instruments Incorporated
Resonant Systems, Inc., Ex. 2017
Sony Interactive Entertainment Inc., etc. v. Resonant Systems, Inc., IPR2024-000807

Many PWM circuits operate without the comparator included in the feedback loop of an amplifier. For these circuits, the output duty cycle is a function of the amplitude of the triangle wave (V_{TRI}) and amplitude of the input signal (V_{IN}). The average output voltage (V_O) depends on the amplitude of the PWM waveform (V_{PWM}) which is typically determined by the supply voltages of the comparator.

$$V_O = \delta * V_{PWM} = \frac{V_{TRI} + V_{IN}}{2 * V_{TRI}} * V_{PWM} \tag{2}$$

Because the supply voltage of the comparator directly impacts the output voltage, PWM circuits without feedback have no power supply rejection. In this TI Design, the error amplifier acts as an inverting amplifier to the input signal, shown as a dc-coupled source V_{IN}. By including the comparator inside the feedback loop of the error amplifier, and adding integration capacitor C1, the error amplifier now directly controls the average output voltage.

$$V_O = \left(-\frac{R_4}{R_3} * V_{IN}\right) + V_{REF} \tag{3}$$

The power supply voltage of the comparator no longer affects the average output voltage, showing the benefits of negative feedback on power supply rejection. Using values of 10kOhms for R4 and R3 produces the desired signal gain of -1. The value of capacitor C1 must be chosen to limit the bandwidth of the error amplifier to below the switching frequency in order to ensure stability of the system. This will also limit the signal bandwidth, so a value must be chosen which does not interfere with the desired signal bandwidth. C1 creates a pole in the frequency response at:

$$f_p = \frac{1}{2\pi R_4 C_1} \tag{4}$$

A value of 100 pF for C1 creates a pole in the frequency response at 159 kHz and causes negligible attenuation of the signal within the audio frequency range (20 Hz to 20 kHz).An offset is added to the signal (VREF) such that input signals that extend below ground may be accommodated. Because the offset voltage, provided by 2.5 V reference U3, is applied to the non-inverting input of amplifier U1A, it is amplified according to the equation:

$$V_O = \left(1 + \frac{R_4}{R_3}\right) V_{(IN+)} \tag{5}$$

Resistors R1 and R2 are necessary to divide the reference voltage by two, in order to compensate for the non-inverting gain of two applied by the error amplifier. Thus, the DC offset at the output of U1A is:

$$\begin{aligned} V_O &= \left(1 + \frac{R_4}{R_3}\right)\left(\frac{R_2}{R_1 + R_2}\right) V_{REF} \\ &= \left(1 + \frac{10\text{ kOhms}}{10\text{ kOhms}}\right)\left(\frac{10\text{ kOhms}}{10\text{ kOhms} + 10\text{ kOhms}}\right) 2.5\text{ V} = 2.5\text{ V} \end{aligned} \tag{6}$$

AC coupling the input signal through a capacitor will reduce the non-inverting gain to unity. In this case, resistor R2 can be removed from the circuit. Capacitor C2 is included at the non-inverting input to filter any interference which may be introduced to the non-inverting input.

2.2 Triangle Wave Generator

The other halves of the dual op amp and comparator form the basis for the triangle wave generator. The operation of this circuit is well described in reference 1 and this document draws on that publication for several design equations.

Copyright © 2013, Texas Instruments Incorporated
Resonant Systems, Inc., Ex. 2017
Sony Interactive Entertainment Inc., etc. v. Resonant Systems, Inc., IPR2024-000807

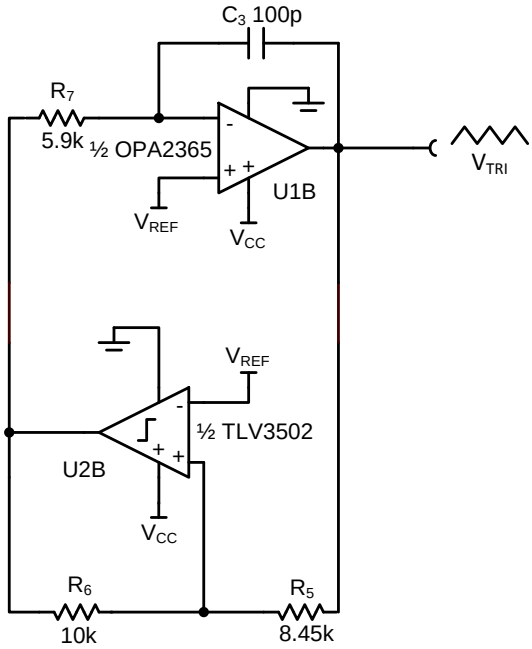

Figure 5: Triangle wave generator circuit with calculated component values.

The op amp is configured as an integrator and its output increases linearly when the comparator output is low. Conversely, the output decreases linearly when the comparator output is high. The comparator output switches when the voltage at its non-inverting input passes through the reference voltage, which is 2.5V in this circuit. Because this circuit is designed to be powered from a single 5V supply, a 2.5V offset was added to the triangle wave such that it is centered at the mid-supply point for all components in the circuit. The amplitude of the triangle wave is defined by the equation:

$$V_{TRI} = \frac{R_5}{R_6} V_1 \tag{7}$$

In this equation, V_1 is the comparator output voltage above or below the reference voltage. For example, in our system the comparator output will be either 5V or 0V. Because this circuit employs a 2.5V reference, V_1 is equal to 2.5V. Most PWM systems do not allow for 0% or 100% modulation because the output would be DC and may damage other components in the signal path. Therefore, the amplitude of the triangle wave must be chosen such that it is greater than the maximum expected input voltage. Choosing an amplitude of 2.1V will allow for the required input range of -2V to +2V. By selecting a value of 10kOhms for R6, the value of R5 can be calculated:

$$R_5 = \frac{V_{TRI} * R_6}{V_1} = \frac{2.1\ \text{V} * 10\ \text{kOhms}}{2.5\ \text{V}} = 8421.05\ \text{Ohms} \rightarrow 8.45\ \text{kOhms} \tag{8}$$

A value of 8.45 kOhms is the closest 1% value to the calculated value. Low resistor values in the triangle wave generator circuit can cause excess current to be drawn from the op amp output. This may have the effect of distorting the triangular waveform shape. Although higher triangle wave amplitudes would allow for larger input voltages, we are limited by the output voltage range of the op amp. The oscillation frequency of the triangle wave generator is calculated from this equation:

$$f_T = \frac{R_6}{4 R_7 R_5 C_3} \tag{9}$$

Selecting a value of 100 pF for C3 allows us to calculate R7 for a 500 kHz triangle wave:

Copyright © 2013, Texas Instruments Incorporated
Resonant Systems, Inc., Ex. 2017
Sony Interactive Entertainment Inc., etc. v. Resonant Systems, Inc., IPR2024-000807

$$R_7 = \frac{R_6}{4f_T R_5 C_3} = \frac{10\ \text{kOhms}}{4(500\ \text{kHz})(8.45\ \text{kOhms})(100\ \text{pF})} = 5917.16\ \text{Ohms}$$
$$\rightarrow 5.90\ \text{kOhms} \tag{10}$$

3 Component Selection

3.1 Amplifier Selection

In order to use a dual operational amplifier for this circuit, one must consider the demands of both the error amplifier and the triangle wave generator portions of the circuit. Examining at the triangle wave generator portion the slew rate and bandwidth of the op amp must be considered. The slew rate of the linear portion of the triangle wave is:

$$R_S = 4 * V_{TRI} * f_{TRI} = 4 * 2.1\ \text{V} * 500\ \text{kHz} = 4.2\text{V}/\mu\text{s} \tag{11}$$

An op amp with a slew rate much greater than 4.2 V/µs must be used in this circuit in order to prevent distortion of the triangle wave. A triangle wave is an infinite summation of sinusoids which are odd-ordered integer multiples of the fundamental. Using a rule of thumb that 10 harmonics are the minimum necessary to produce a triangular wave, we can determine that the bandwidth of the op amp must be greater than 19 times the triangle wave frequency. This is because the 10th harmonic of a triangle wave has a frequency 19 times the fundamental.

$$\text{GBW} = 19 * f_{TRI} = 19 * 500\text{kHz} = 9.5\text{MHz} \tag{12}$$

The op amp is configured as an integrator in the triangle wave circuit. In this configuration, the input bias current of the op amp can contribute error to the triangle wave shape by delivering or removing extra charge from the integration capacitor C3. For this reason, a FET type op amp is recommended because the extremely low bias currents of these amplifiers will not add appreciable error to the triangle wave shape. Finally, the output of the op amp must be able to produce voltages near the supply voltages. The triangle wave in this circuit has an amplitude of 2.1V and an offset of 2.5V giving it maximum and minimum voltages of 4.6V and .4V respectively. The op amp must be able to output voltages less than 400mV from either supply rail if it is powered from a single 5V supply.

The additional demands placed on the dual op amp are from the error amplifier portion of the circuit. For DC applications, the op amp's input offset voltage and offset voltage drift may introduce inaccuracies in the output waveform. More commonly however, DC inaccuracy is dominated by the tolerance of resistors R2, R3, R4, and R5. The OPA2365 chosen for this circuit is a FET-input dual op amp that has a gain bandwidth product of 50 MHz and a typical slew rate of 25 V/µs. The maximum offset of the OPA2365 is 200 µV with a maximum offset drift of 1 µV/°C. These specifications make the OPA2365 an excellent candidate for both the error amplifier and triangle wave portions of the circuit.

3.2 Comparator Selection

The comparator used must have a push-pull output topology. Many comparators have an open collector or open drain output topology. Although an open drain output allows the output voltage to be rapidly pulled low, the output voltage can only be pulled high through an external resistor. Low value resistors allow for fast rise times on the output but cause excess power dissipation while the output is pulled low. In the triangle wave circuit, a comparator with an open drain output would also have different rise and fall times at its output, distorting the triangle wave.

For proper operation of the triangle wave generator and stability of the control loop the propagation delay of the comparator must be much less than the period of the PWM waveform.

$$t_{pd} \ll T_{PWM} \tag{13}$$

Keeping the comparator propagation delay less than 1/10th the period of the PWM waveform is a good design goal. The phase delay introduced by the comparator can be calculated using the equation:

Copyright © 2013, Texas Instruments Incorporated
Resonant Systems, Inc., Ex. 2017
Sony Interactive Entertainment Inc., etc. v. Resonant Systems, Inc., IPR2024-000807

$$\Phi = t_{pd} f * 360 \tag{14}$$

Because the propagation delay of the comparator must be much less than the period of the PWM waveform, the comparator will not introduce significant phase delay into the feedback loop until frequencies well above the switching frequency. This is why choosing a pole frequency for the error amplifier less than the switching frequency allows for stable operation. The TLV3502 used here has a push-pull output and a typical propagation delay of 4.5 ns making it a good candidate for systems with high PWM frequencies.

3.3 Passive Component Selection

Resistors

The tolerance of resistors R1, R2, R3, and R4 is directly responsible for the output offset error and gain error. For the purposes of this document, 1% resistors were used because they were readily available however improvements in the dc performance and gain accuracy of the circuit can be achieved from using resistors with tighter tolerances.

Capacitors

The type of capacitor used for C1 and C3 can have a direct effect on the performance of this circuit. Because both of these capacitors can have a substantial voltage across them, the voltage coefficient of high-k ceramic capacitors can introduce non-linearity in both the error amplifier and triangle wave generator. Ceramic capacitors with an NP0/C0G dielectric were used for these two capacitors. All other capacitors were of the X7R type.

Copyright © 2013, Texas Instruments Incorporated
Resonant Systems, Inc., Ex. 2017
Sony Interactive Entertainment Inc., etc. v. Resonant Systems, Inc., IPR2024-000807

4 Simulation

Because this circuit's operation depends on rapid changes in output voltages as well as an oscillator circuit, it is best to simulate the design in separate parts to confirm functionality and avoid convergence issues in SPICE simulators. For this reason, the error amplifier and comparator were simulated separately from the triangle wave generator.

4.1 Triangle Wave Generator

The Tina-TI™ schematic used to simulate the triangle wave generator portion of the circuit is shown in Figure 6. It includes component values that were calculated in the "Theory of Operation" portion of this document.

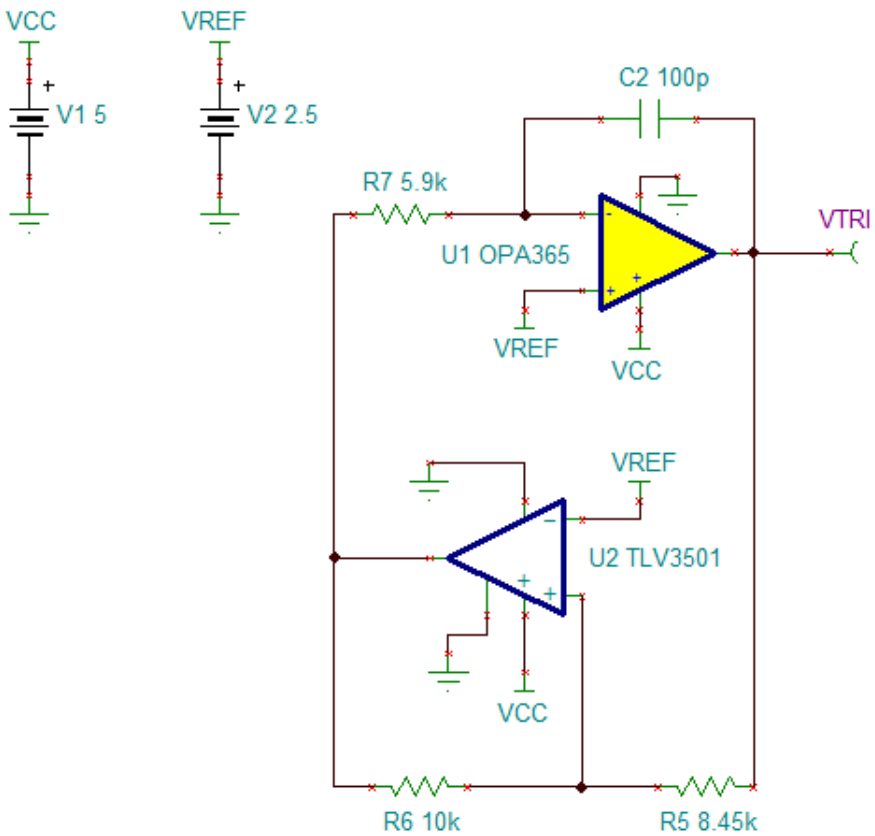

Figure 6: Tina-TI™ simulation schematic of the triangle wave generator.

Transient Analysis

A transient analysis can be used to confirm that the amplitude and frequency of the triangle waveform are close to the intended values.

Copyright © 2013, Texas Instruments Incorporated
Resonant Systems, Inc., Ex. 2017
Sony Interactive Entertainment Inc., etc. v. Resonant Systems, Inc., IPR2024-000807

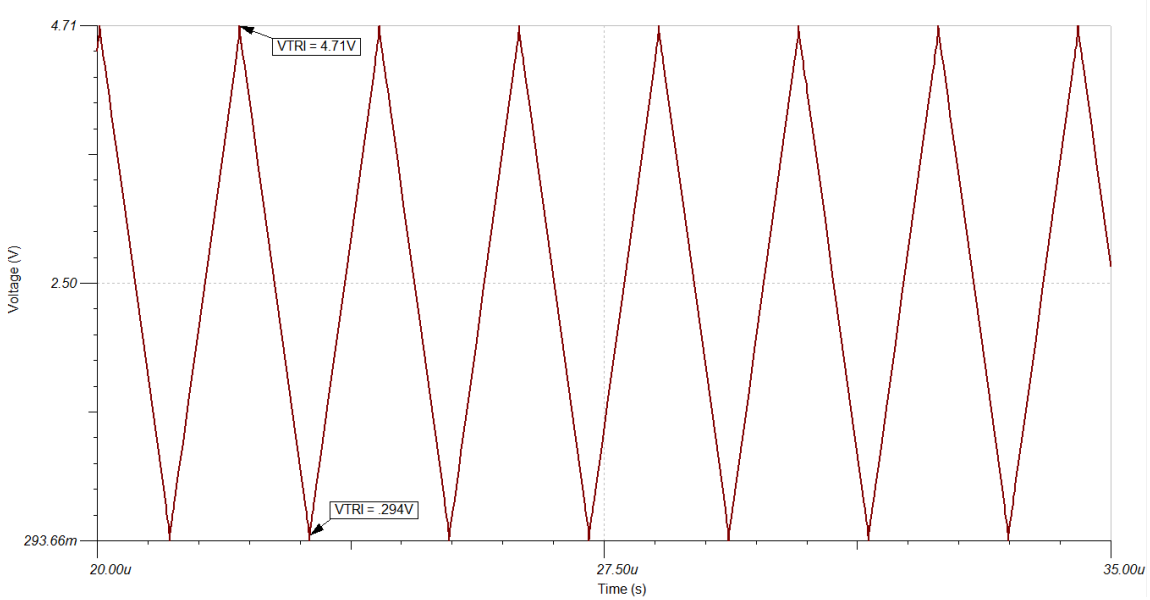

Figure 7: Transient analysis results displaying the output voltage of the triangle wave generator

Table 2: Comparison of the design goals and simulation results for the triangle wave generator

	Design Goal	Simulation
Frequency	500 kHz	483.6 kHz
Amplitude	2.1 V	2.21 V

4.2 Error Amplifier and Comparator

In order to simulate the functionality of the error amplifier and comparator, the triangle wave generator portion of the circuit was replaced with a voltage controlled oscillator (VCO) block which outputs a 500 kHz triangle wave with a 2.5 V offset and 2.1 V amplitude. This allows for faster simulation times and also mitigates convergence issues.

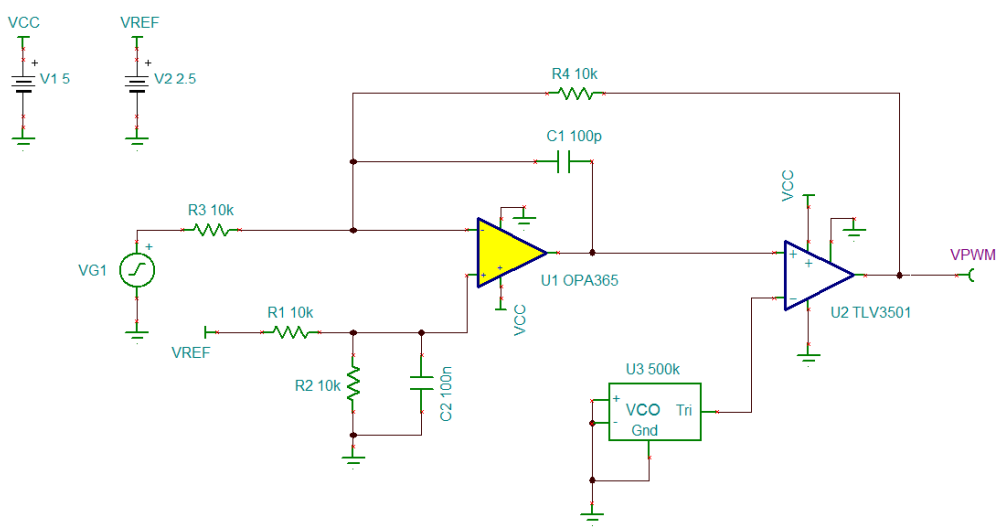

Figure 8: Tina-TI™ simulation schematic of the error amplifier and output comparator.

Copyright © 2013, Texas Instruments Incorporated
Resonant Systems, Inc., Ex. 2017
Sony Interactive Entertainment Inc., etc. v. Resonant Systems, Inc., IPR2024-000807

Transient Analysis

A transient analysis is used to ensure proper functionality of the circuit. As shown in Figure 9, the output is a 500 kHz PWM waveform with a 5 V amplitude. Again, because the error amplifier is in an inverting configuration, the polarity of the output signal is inverted.

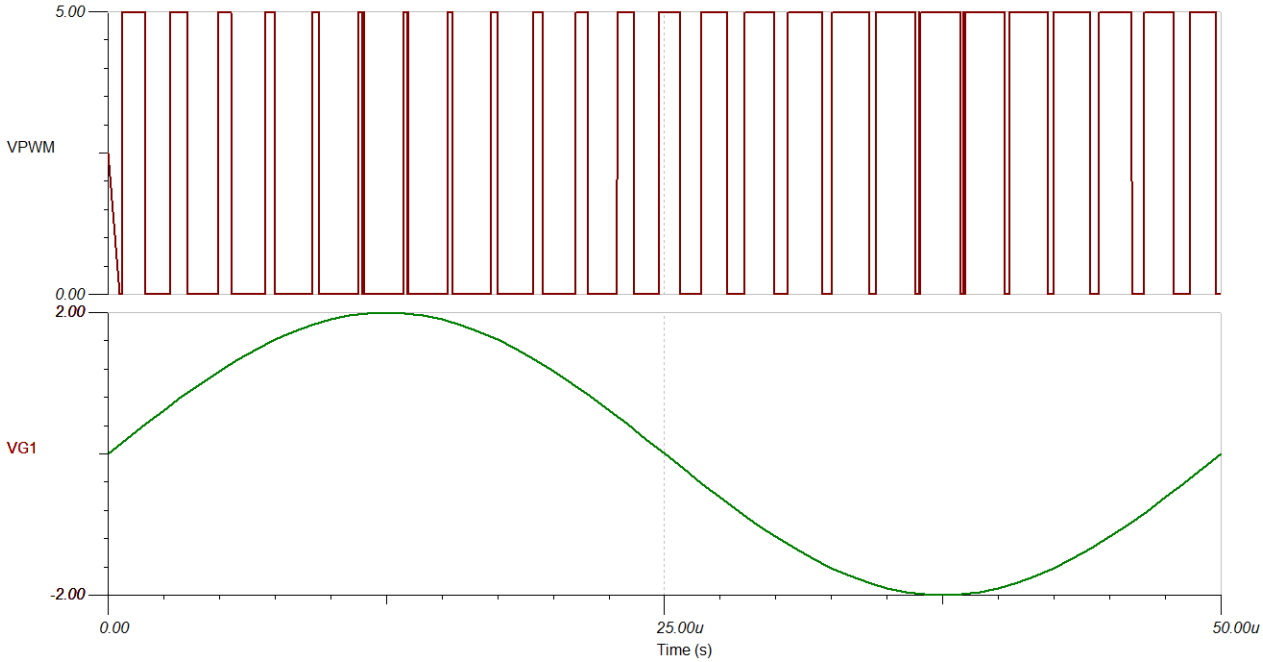

Figure 9: Transient analysis of the error amplifier and comparator showing the comparator output (top, red) and the input waveform (bottom, green).

DC Transfer Characteristic

Performing a dc transfer characteristic sweep shows that the average output voltage follows the desired transfer function if the circuit is built with ideal component values for R1 through R4. The voltage plotted in Figure 10 is measured at VPWM in the schematic in Figure 8. Because this simulation is a dc transfer characteristic, the plotted voltage is the average value of the PWM waveform.

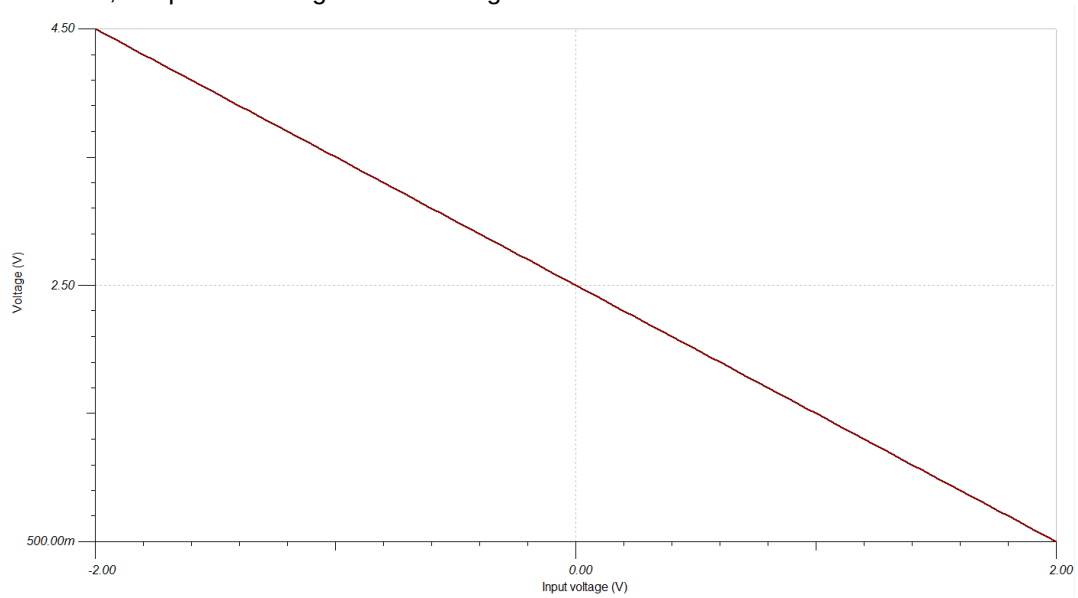

Figure 10: A DC transfer characteristic sweep showing the average output voltage of the circuit when built with ideal components.

Copyright © 2013, Texas Instruments Incorporated
Resonant Systems, Inc., Ex. 2017
Sony Interactive Entertainment Inc., etc. v. Resonant Systems, Inc., IPR2024-000807

Performing a 100-sweep Monte Carlo analysis of the circuit, using 1% tolerances for the resistors with a Gaussian distribution shows more realistic values for the output at different input voltages.

Table 3: Monte Carlo analysis results for different input voltages.

Input	Designed Output	Simulation Output (Min)	Simulation Output (Max)	Average	Standard Deviation
0V	2.5 V	2.4419 V	2.549304 V	2.501631 V	0.0235407 V
-2V	4.5 V	4.367954 V	4.618445 V	4.500606 V	0.0468972 V
+2V	0.5 V	0.436538 V	0.549543 V	0.502656 V	0.02322183 V

These numbers reveal a potential gain error of +/- 4.5% and a potential offset of 58.1mV or 2.324% error. Using resistors with tighter tolerances can greatly increase the DC accuracy of this circuit.

4.3 Simulated Results Summary

Comparing the simulated results to the design goals shows that the design requirements will be met even when factoring in the component tolerances, as shown in the Monte Carlo analysis.

Table 4: Comparison of design goals and simulated results

	Goals	Simulated
THD (1Vrms, 1kHz)	0.1%	NA
Offset Error (%)	5%	2.324%
Gain Error (%)	5%	4.5%

Copyright © 2013, Texas Instruments Incorporated
Resonant Systems, Inc., Ex. 2017
Sony Interactive Entertainment Inc., etc. v. Resonant Systems, Inc., IPR2024-000807

5 PCB Design

The PCB schematic and Bill of Materials can be found in the appendix.

5.1 PCB Layout

The fast edge rates of the output PWM signal can be capacitively coupled back into the signal path or reference voltage. The PCB layout for this TI design seeks to minimize trace lengths and loop areas, and separates the error amplifier portion of the circuit from the triangle wave generator and PWM outputs. Jumper JP1 can be removed to accommodate ac coupling of the input signal. If this is desired, resistor R2 must be removed in order to maintain the proper dc offset at the output. Resistor R4 closes the error amplifier feedback loop around the comparator. However, R4 can be uninstalled and resistor R8 (on the bottom of the PCB) can be installed to close the error amplifier feedback loop excluding the comparator.

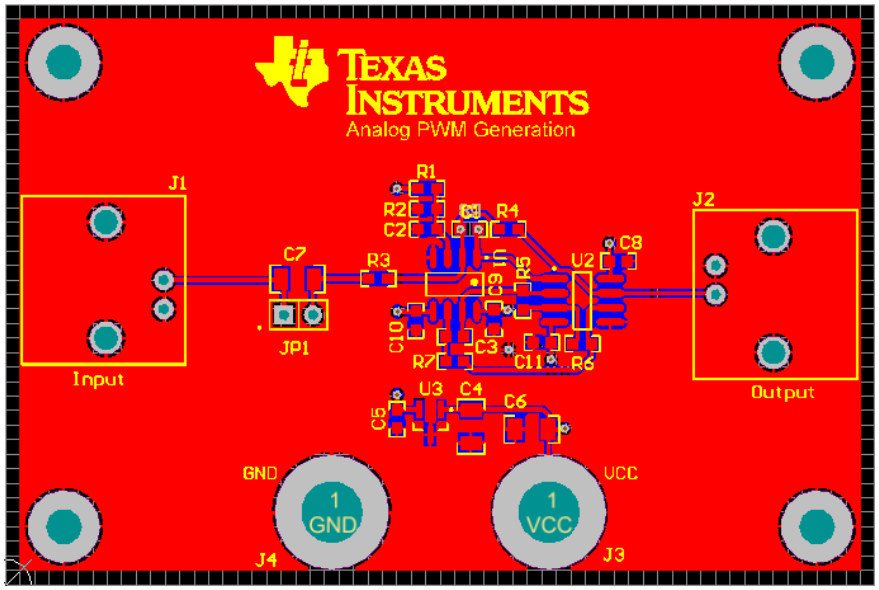

Figure 11: Top view of the PCB layout.

Copyright © 2013, Texas Instruments Incorporated
Resonant Systems, Inc., Ex. 2017
Sony Interactive Entertainment Inc., etc. v. Resonant Systems, Inc., IPR2024-000807

6 Verification & Measured Performance

The output of the triangle wave generator circuit was examined to confirm that it met the designed specifications. The output of this circuit is shown in Figure 12, the amplitude of the triangle wave was 2.087 V and the frequency was 477 kHz. These values were suitably close to the design values for the total system performance to meet the design specifications.

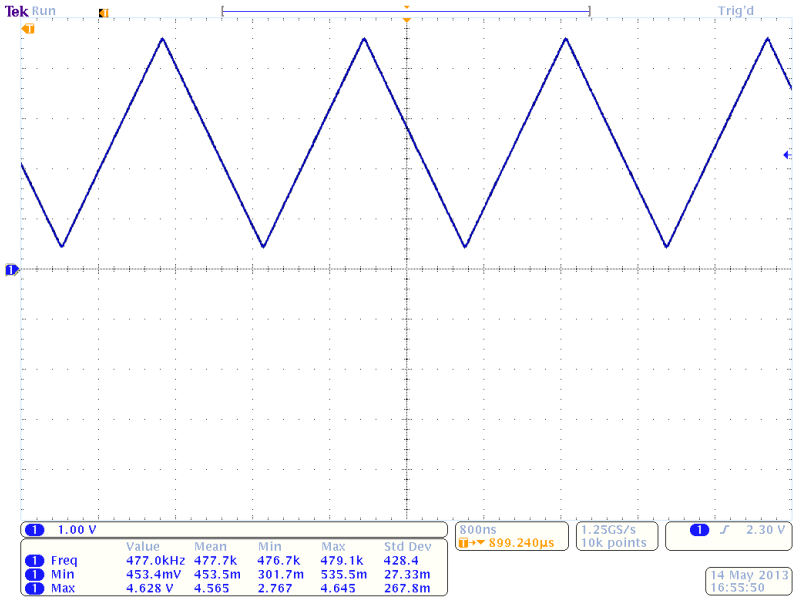

Figure 12: Output of the triangle wave generator circuit

Basic functionality of the circuit was confirmed by viewing the output PWM waveform on an oscilloscope and observing the change in duty cycle when an input signal is applied.

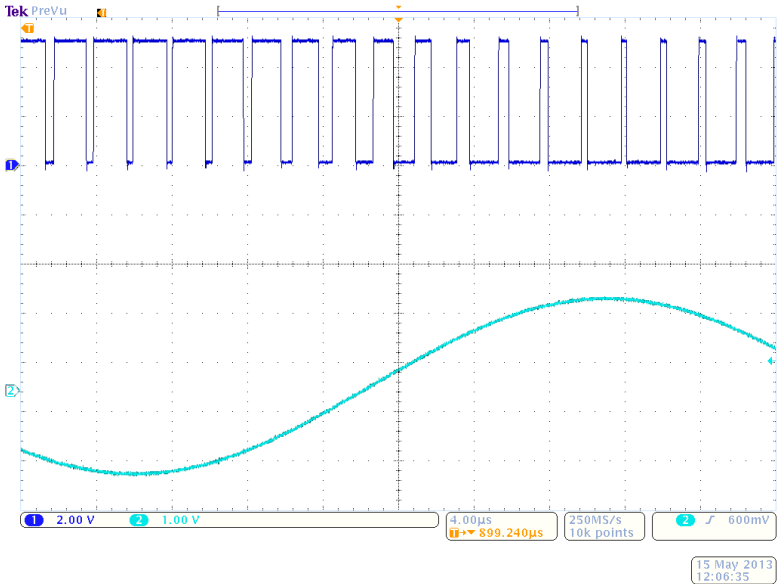

Figure 13: Pulse width modulated waveform (top) produced by an input 20 kHz, 1.5 Vp input sine wave (bottom)

In order to recover the average output voltage V_O from the PWM waveform, a lowpass filter must be placed at the output of the circuit. Figure 14 shows the passive 4th-order Butterworth lowpass filter used to recover the average output voltage and facilitate the measurement of the dc transfer function and distortion performance of the circuit.

Copyright © 2013, Texas Instruments Incorporated
Resonant Systems, Inc., Ex. 2017
Sony Interactive Entertainment Inc., etc. v. Resonant Systems, Inc., IPR2024-000807

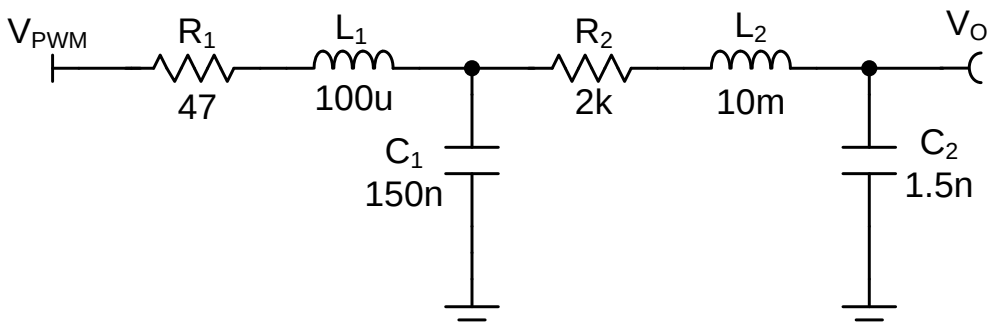

Figure 14: A 4th-order Butterworth lowpass filter used to measure the average output voltage of the PWM waveform

Placing this filter on the output of the circuit, we can see that the average output voltage is indeed an inverted representation of the input signal.

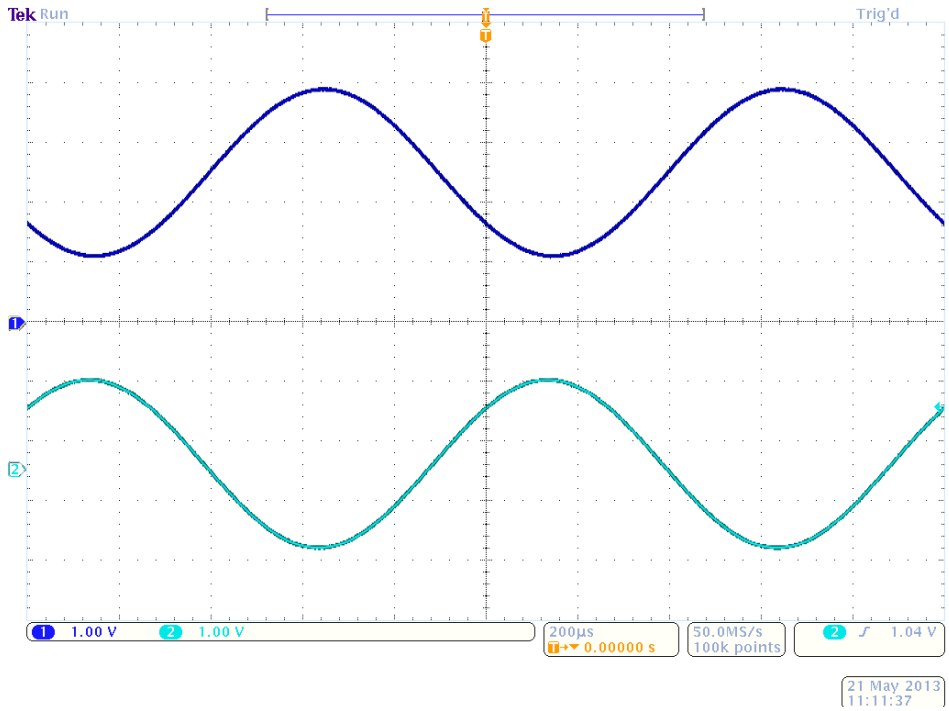

Figure 15: Lowpass filtered output (top) shows proper reconstruction of the input signal with phase inverted.

6.1 Transfer Function

The transfer function of the circuit was measured by varying the input voltage and measuring the voltage after the filter with a 6.5 digit voltmeter. The gain of the circuit was -0.9978 V/V which is a gain error of 0.22%. The offset of the circuit was measured at 2.4973 V, producing an offset error of 0.108%. Because the measured transfer function so closely follows the ideal transfer function for the circuit, the deviation between measured and ideal was plotted separately. Figure 17 displays the total transfer function error which includes both offset and gain error. The worst case deviation from ideal occurs for a 2 V input which produced and output error of 0.32%.

Copyright © 2013, Texas Instruments Incorporated
Resonant Systems, Inc., Ex. 2017
Sony Interactive Entertainment Inc., etc. v. Resonant Systems, Inc., IPR2024-000807

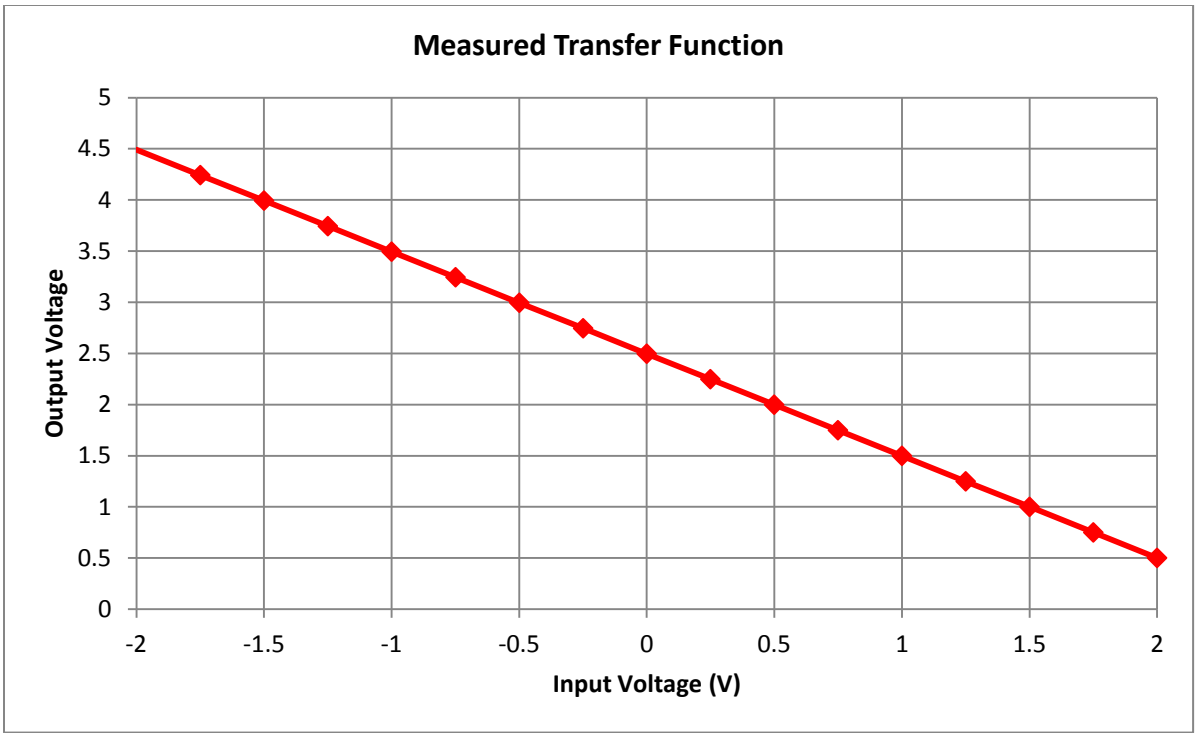

Figure 16: The transfer function of the circuit measured by lowpass filtering the output waveform.

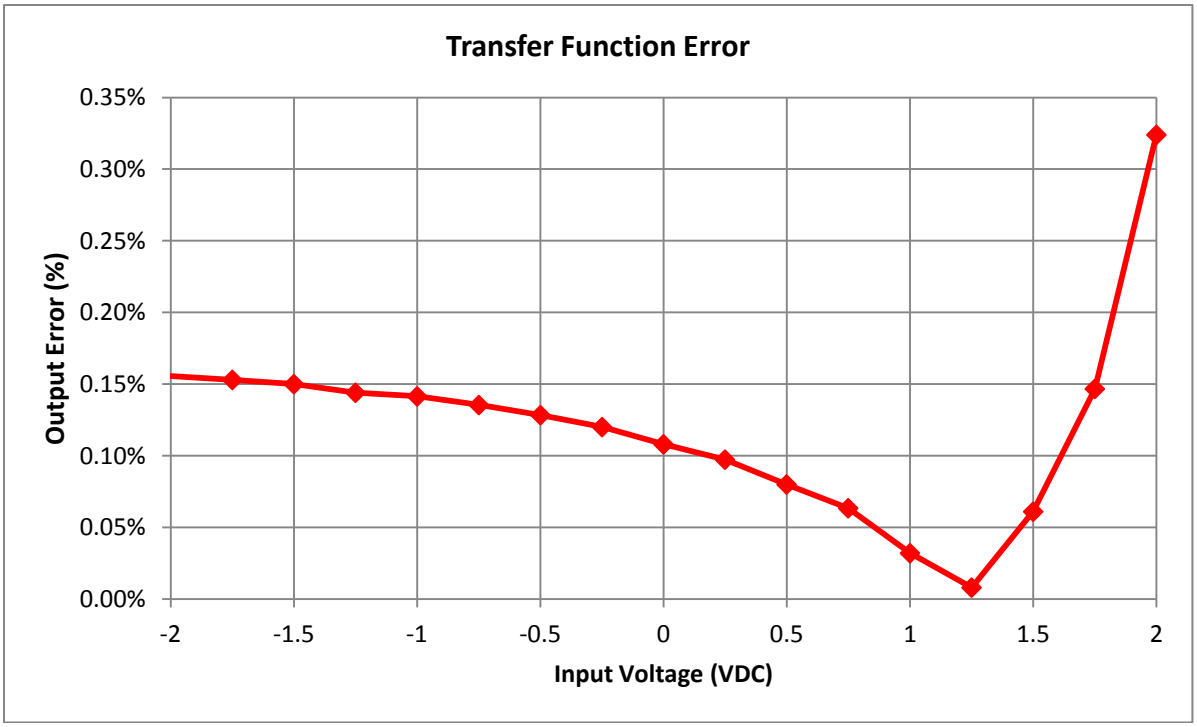

Figure 17: Total measured transfer function error.

Copyright © 2013, Texas Instruments Incorporated
Resonant Systems, Inc., Ex. 2017
Sony Interactive Entertainment Inc., etc. v. Resonant Systems, Inc., IPR2024-000807

6.2 Total Harmonic Distortion and Noise

Because PWM circuits are commonly used in audio applications, the total harmonic distortion and noise (THD+N) of the circuit was measured over the 20 Hz to 20 kHz frequency range for a 1 Vrms input signal. A 4th-order passive Butterworth lowpass filter with a corner frequency of 40 kHz was added to the output of the circuit to recover the input signal. An audio analyzer configured with an AES17 40 kHz input filter was used to perform the measurements. The plot shows the THD+N for the circuit configured two ways. The red trace is the output THD+N when the feedback loop incorporates the output comparator (closed loop). The blue trace is the output THD+N when the feedback loop only includes the error amplifier (open loop).

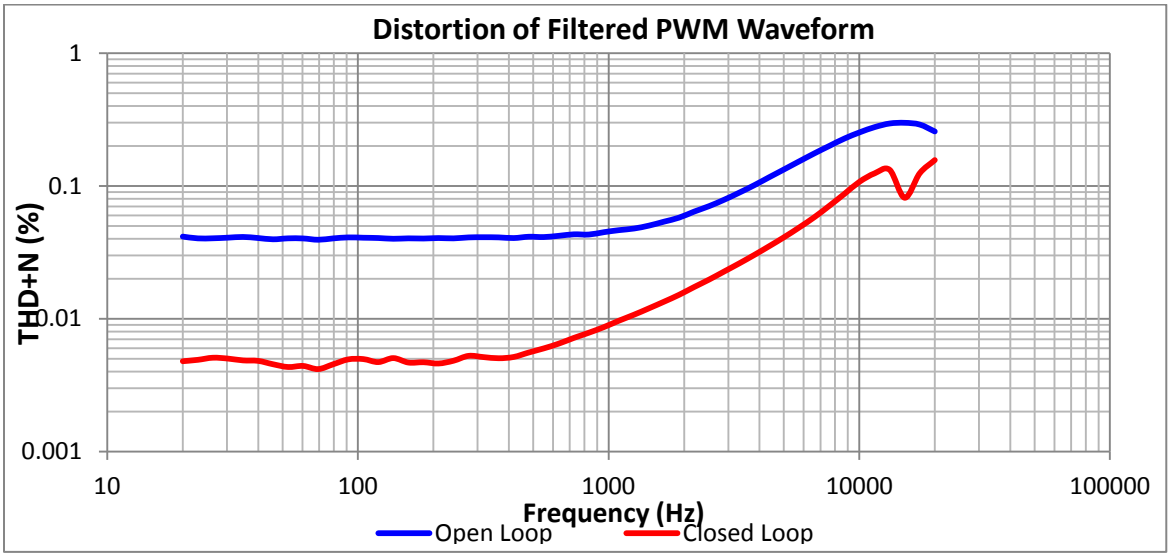

Figure 18: Measured THD+N of the lowpass filtered PWM waveform. THD+N is greatly reduced by closing the error amplifier feedback loop around the comparator (red).

6.3 Measured Result Summary

The measured results of the circuit exceed the design goals by a large amount in every category. However, these results are for a single unit. If a large number of units were built, it is likely that some units would exhibit the offset and gain error magnitudes shown in the Monte Carlo simulation.

Table 5: A comparison of the measured results to the design goals

	Goals	Measured
THD (1Vrms, 1kHz)	0.1%	0.009%
Offset Error (%)	5%	0.108%
Gain Error (%)	5%	0.22%

7 Modifications

Several dual operational amplifiers meet the design requirements of wide bandwidth, high slew rate, low input offset voltage and low offset voltage drift. Selecting an alternative amplifier depends on the dominant performance goals of the project. For example, selecting an OPA2376 could potentially improve the DC accuracy of the circuit due to its improved offset and drift specifications. However, because this amplifier has a lower bandwidth and slew rate than the OPA2365, the PWM frequency would need to be reduced. One modification that may improve the performance of this system is to use separate single-channel amplifiers for the error amplifier and triangle wave generator. This would allow for both high DC precision and fast PWM frequencies, while reducing power consumption.

Copyright © 2013, Texas Instruments Incorporated
Resonant Systems, Inc., Ex. 2017
Sony Interactive Entertainment Inc., etc. v. Resonant Systems, Inc., IPR2024-000807

Table 6: Several alternative amplifiers compared with the OPA2365

Amplifier	Max Offset Voltage (uV)	Max Offset Drift (uV/°C)	Gain Bandwidth (MHz)	Slew Rate (V/us)	Supply Current (mA/ch)
OPA2365	200	1	50	25	4.6
OPA2320	150	5	20	10	1.5
OPA2350	500	4	38	22	5.2
OPA2376	25	1	5.5	2	0.76

Because the dual comparator must have a push-pull output topology and an extremely low propagation delay, the number of alternative comparators is greatly limited. The TLV3202 is one alternative which offers reduced power supply consumption with a slightly slower propagation dely. It is important to note that the TLV3202 does not have a compatible pin out with the TLV3502 and will not work on the PCB layout presented herein.

Table 7: Comparison of TLV3202 and TLV3502 comparators

Comparator	Supply Current (mA/ch)	Propagation Delay (nS)
TLV3502	3.2	4.5
TLV3202	0.04	40

8 About the Author

John Caldwell is an applications engineer with Texas Instruments Precision Analog, supporting operational amplifiers and industrial linear devices. He specializes in precision circuit design for sensors, low-noise design and measurement, and electromagnetic interference issues. He received his MSEE and BSEE from Virginia Tech with a research focus on biomedical electronics and instrumentation. Prior to joining TI in 2010, John worked at Danaher Motion and Ball Aerospace.

9 Acknowledgements & References

1. *W.M. Leach, Introduction to Electroacoustics and Audio Amplifier Design: The Class-D Amplifier, Iowa: Kendall/Hunt Publishing Co., 2001.*

Copyright © 2013, Texas Instruments Incorporated
Resonant Systems, Inc., Ex. 2017
Sony Interactive Entertainment Inc., etc. v. Resonant Systems, Inc., IPR2024-000807

Appendix A.

A.1 Electrical Schematic

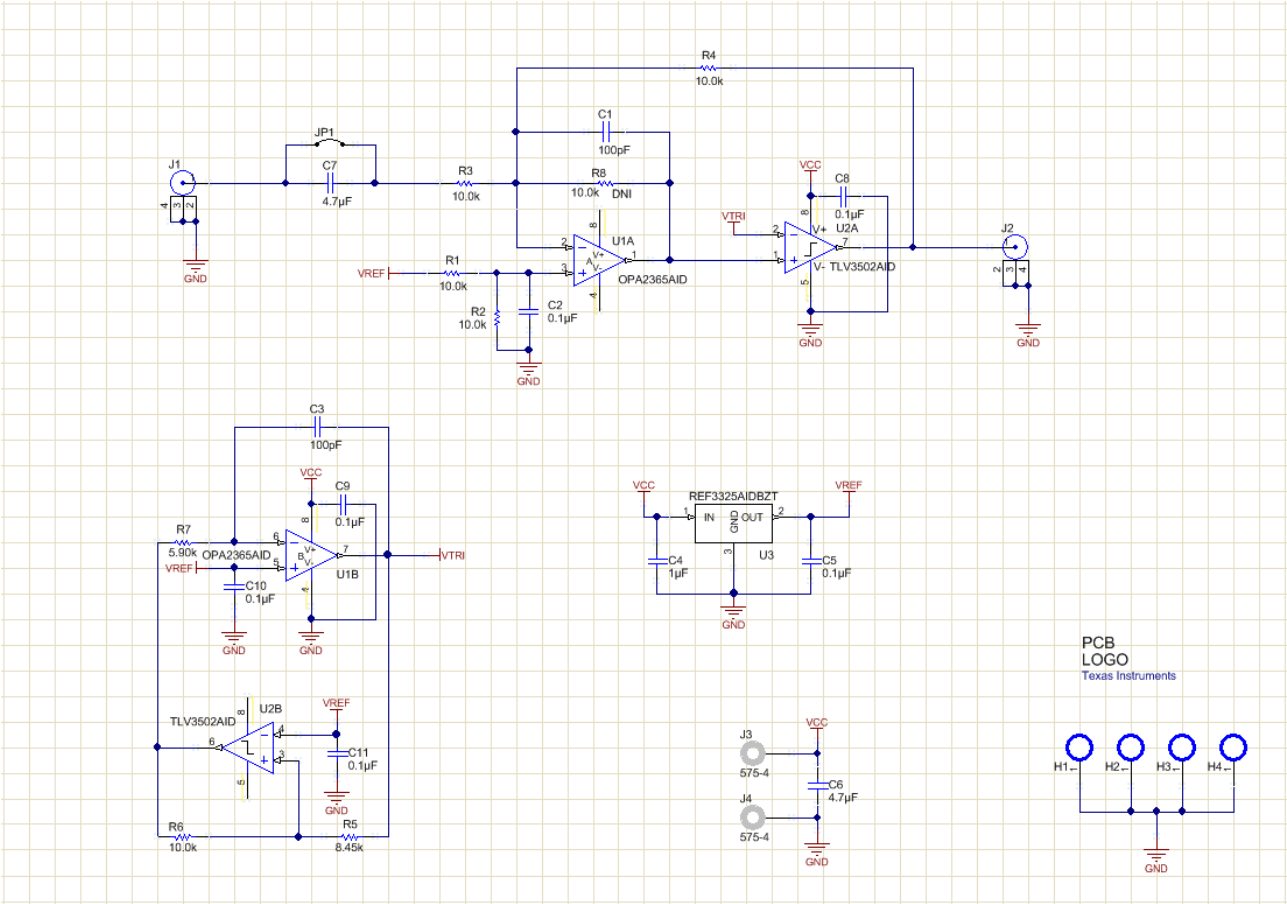

Figure A-1: Electrical Schematic

Copyright © 2013, Texas Instruments Incorporated
Resonant Systems, Inc., Ex. 2017
Sony Interactive Entertainment Inc., etc. v. Resonant Systems, Inc., IPR2024-000807

A.2 Bill of Materials

Quantity	Value	Designator	Description	Manufacturer	Manufacturer Part #	Supplier Part #
2	100pF	C1, C3	CAP, CERM, 100pF, 50V, +/-5%, C0G/NP0, 0603	AVX	06035A101JAT2A	478-1175-1-ND
6	0.1uF	C2, C5, C8, C9, C10, C11	CAP, CERM, 0.1uF, 16V, +/-5%, X7R, 0603	AVX	0603YC104JAT2A	478-3726-1-ND
1	1uF	C4	CAP, CERM, 1uF, 25V, +/-10%, X7R, 1206	Kemet	C1206C105K3RACTU	399-1255-1-ND
2	4.7uF	C6, C7	CAP, CERM, 4.7uF, 16V, +/-10%, X5R, 1206	Kemet	C1206C475K4PAC TU	4520506
2		J1, J2	Right Angle BNC Connector	TE Connectivity	1-1634612-0	571-1-1634612-0
2		J3, J4	Standard Banana Jack, Uninsulated, 5.5mm	Keystone	575-4	575-4K-ND
1		JP1	Two pin male header for jumper	Samtec	87224-2	A26543-ND
6	10.0k	R1, R2, R3, R4, R6, R8(DNI)	RES, 10.0k ohm, 1%, 0.1W, 0603	Vishay-Dale	CRCW060310K0FKEA	541-10.0KHCT-ND
1	8.45k	R5	RES, 8.45k ohm, 1%, 0.1W, 0603	Vishay-Dale	CRCW06038K45FKEA	541-8.45KHCT-ND
1	5.90k	R7	RES, 5.90k ohm, 1%, 0.1W, 0603	Vishay-Dale	CRCW06035K90FKEA	541-5.90KHCT-ND
1		U1	OPA2365 Dual Operational Amplifier	Texas Instruments	OPA2365AID	595-OPA2365AID
1		U2	TLV3502 Dual Comparator	Texas Instruments	TLV3502AID	296-18301-5-ND
1		U3	REF3325, 2.5V Low Power Voltage Reference	Texas Instruments	REF3325AIDCKT	296-22642-2-ND

Copyright © 2013, Texas Instruments Incorporated
Resonant Systems, Inc., Ex. 2017
Sony Interactive Entertainment Inc., etc. v. Resonant Systems, Inc., IPR2024-000807

IMPORTANT NOTICE FOR TI REFERENCE DESIGNS

Texas Instruments Incorporated ("TI") reference designs are solely intended to assist designers (“Buyers”) who are developing systems that incorporate TI semiconductor products (also referred to herein as “components”). Buyer understands and agrees that Buyer remains responsible for using its independent analysis, evaluation and judgment in designing Buyer’s systems and products.

TI reference designs have been created using standard laboratory conditions and engineering practices. **TI has not conducted any testing other than that specifically described in the published documentation for a particular reference design.** TI may make corrections, enhancements, improvements and other changes to its reference designs.

Buyers are authorized to use TI reference designs with the TI component(s) identified in each particular reference design and to modify the reference design in the development of their end products. HOWEVER, NO OTHER LICENSE, EXPRESS OR IMPLIED, BY ESTOPPEL OR OTHERWISE TO ANY OTHER TI INTELLECTUAL PROPERTY RIGHT, AND NO LICENSE TO ANY THIRD PARTY TECHNOLOGY OR INTELLECTUAL PROPERTY RIGHT, IS GRANTED HEREIN, including but not limited to any patent right, copyright, mask work right, or other intellectual property right relating to any combination, machine, or process in which TI components or services are used. Information published by TI regarding third-party products or services does not constitute a license to use such products or services, or a warranty or endorsement thereof. Use of such information may require a license from a third party under the patents or other intellectual property of the third party, or a license from TI under the patents or other intellectual property of TI.

TI REFERENCE DESIGNS ARE PROVIDED "AS IS". TI MAKES NO WARRANTIES OR REPRESENTATIONS WITH REGARD TO THE REFERENCE DESIGNS OR USE OF THE REFERENCE DESIGNS, EXPRESS, IMPLIED OR STATUTORY, INCLUDING ACCURACY OR COMPLETENESS. TI DISCLAIMS ANY WARRANTY OF TITLE AND ANY IMPLIED WARRANTIES OF MERCHANTABILITY, FITNESS FOR A PARTICULAR PURPOSE, QUIET ENJOYMENT, QUIET POSSESSION, AND NON-INFRINGEMENT OF ANY THIRD PARTY INTELLECTUAL PROPERTY RIGHTS WITH REGARD TO TI REFERENCE DESIGNS OR USE THEREOF. TI SHALL NOT BE LIABLE FOR AND SHALL NOT DEFEND OR INDEMNIFY BUYERS AGAINST ANY THIRD PARTY INFRINGEMENT CLAIM THAT RELATES TO OR IS BASED ON A COMBINATION OF COMPONENTS PROVIDED IN A TI REFERENCE DESIGN. IN NO EVENT SHALL TI BE LIABLE FOR ANY ACTUAL, SPECIAL, INCIDENTAL, CONSEQUENTIAL OR INDIRECT DAMAGES, HOWEVER CAUSED, ON ANY THEORY OF LIABILITY AND WHETHER OR NOT TI HAS BEEN ADVISED OF THE POSSIBILITY OF SUCH DAMAGES, ARISING IN ANY WAY OUT OF TI REFERENCE DESIGNS OR BUYER’S USE OF TI REFERENCE DESIGNS.

TI reserves the right to make corrections, enhancements, improvements and other changes to its semiconductor products and services per JESD46, latest issue, and to discontinue any product or service per JESD48, latest issue. Buyers should obtain the latest relevant information before placing orders and should verify that such information is current and complete. All semiconductor products are sold subject to TI’s terms and conditions of sale supplied at the time of order acknowledgment.

TI warrants performance of its components to the specifications applicable at the time of sale, in accordance with the warranty in TI’s terms and conditions of sale of semiconductor products. Testing and other quality control techniques for TI components are used to the extent TI deems necessary to support this warranty. Except where mandated by applicable law, testing of all parameters of each component is not necessarily performed.

TI assumes no liability for applications assistance or the design of Buyers’ products. Buyers are responsible for their products and applications using TI components. To minimize the risks associated with Buyers’ products and applications, Buyers should provide adequate design and operating safeguards.

Reproduction of significant portions of TI information in TI data books, data sheets or reference designs is permissible only if reproduction is without alteration and is accompanied by all associated warranties, conditions, limitations, and notices. TI is not responsible or liable for such altered documentation. Information of third parties may be subject to additional restrictions.

Buyer acknowledges and agrees that it is solely responsible for compliance with all legal, regulatory and safety-related requirements concerning its products, and any use of TI components in its applications, notwithstanding any applications-related information or support that may be provided by TI. Buyer represents and agrees that it has all the necessary expertise to create and implement safeguards that anticipate dangerous failures, monitor failures and their consequences, lessen the likelihood of dangerous failures and take appropriate remedial actions. Buyer will fully indemnify TI and its representatives against any damages arising out of the use of any TI components in Buyer’s safety-critical applications.

In some cases, TI components may be promoted specifically to facilitate safety-related applications. With such components, TI’s goal is to help enable customers to design and create their own end-product solutions that meet applicable functional safety standards and requirements. Nonetheless, such components are subject to these terms.

No TI components are authorized for use in FDA Class III (or similar life-critical medical equipment) unless authorized officers of the parties have executed an agreement specifically governing such use.

Only those TI components that TI has specifically designated as military grade or “enhanced plastic” are designed and intended for use in military/aerospace applications or environments. Buyer acknowledges and agrees that any military or aerospace use of TI components that have ***not*** been so designated is solely at Buyer's risk, and Buyer is solely responsible for compliance with all legal and regulatory requirements in connection with such use.

TI has specifically designated certain components as meeting ISO/TS16949 requirements, mainly for automotive use. In any case of use of non-designated products, TI will not be responsible for any failure to meet ISO/TS16949.

Mailing Address: Texas Instruments, Post Office Box 655303, Dallas, Texas 75265
Copyright © 2013, Texas Instruments Incorporated