US 20060112427A1

(19) United States
(12) Patent Application Publication
Shahbazi
(10) Pub. No.: US 2006/0112427 A1
(43) Pub. Date: May 25, 2006

(54) ENTERPRISE-WIDE SECURITY SYSTEM FOR COMPUTER DEVICES

(75) Inventor: **Majid Shahbazi**, Oakton, VA (US)

Correspondence Address:
**VENABLE LLP**
**P.O. BOX 34385**
**WASHINGTON, DC 20045-9998 (US)**

(73) Assignee: **Trust Digital, LLC**, Mc Lean, VA (US)

(21) Appl. No.: **10/527,235**

(22) PCT Filed: **Aug. 27, 2003**

(86) PCT No.: **PCT/US03/26645**

**Related U.S. Application Data**

(60) Provisional application No. 60/406,032, filed on Aug. 27, 2002.

**Publication Classification**

(51) **Int. Cl.**

| | | |
|---|---|---|
| *G06F* | *12/14* | (2006.01) |
| *G06F* | *12/00* | (2006.01) |
| *H04L* | *9/32* | (2006.01) |
| *G06F* | *13/00* | (2006.01) |
| *G06F* | *17/30* | (2006.01) |
| *G06F* | *7/04* | (2006.01) |
| *G06F* | *7/58* | (2006.01) |
| *G06K* | *19/00* | (2006.01) |
| *G11C* | *7/00* | (2006.01) |

(52) **U.S. Cl.** ..... **726/16**

(57) **ABSTRACT**

A system and method for securing data in mobile devices includes a computing node and a plurality of mobile devices. A node security program executed in the computing node interfaces with a device security program executed at a mobile device. The computing node is responsible for managing the security based on a node security profile interpreted by a node security program executed in the computing node. A device discovery method and arrangement also detects and locates various information about the mobile devices based on a scan profile.

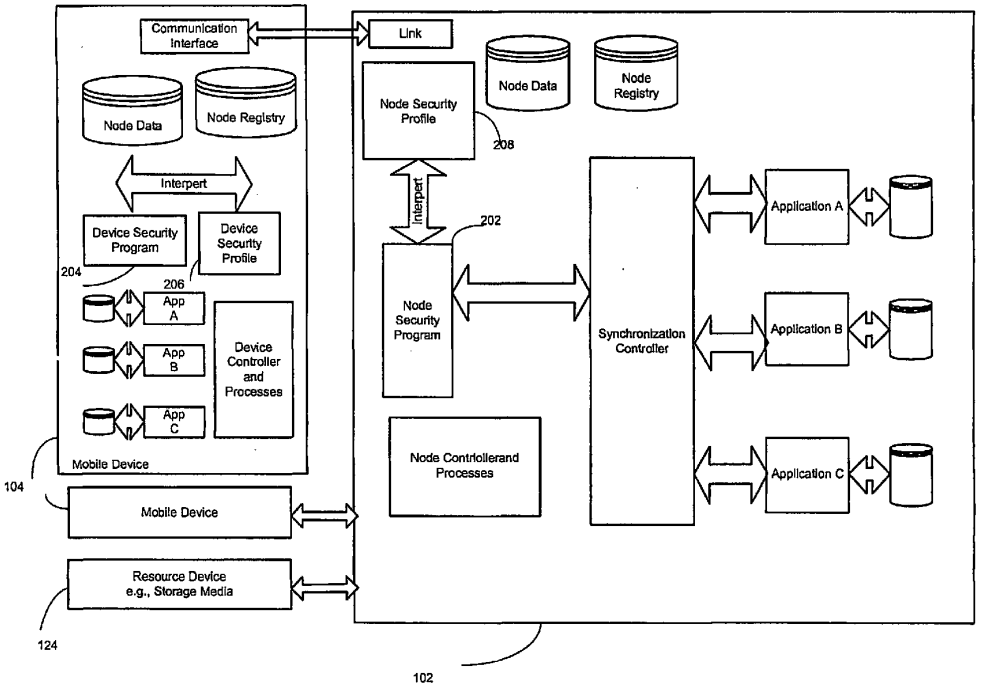

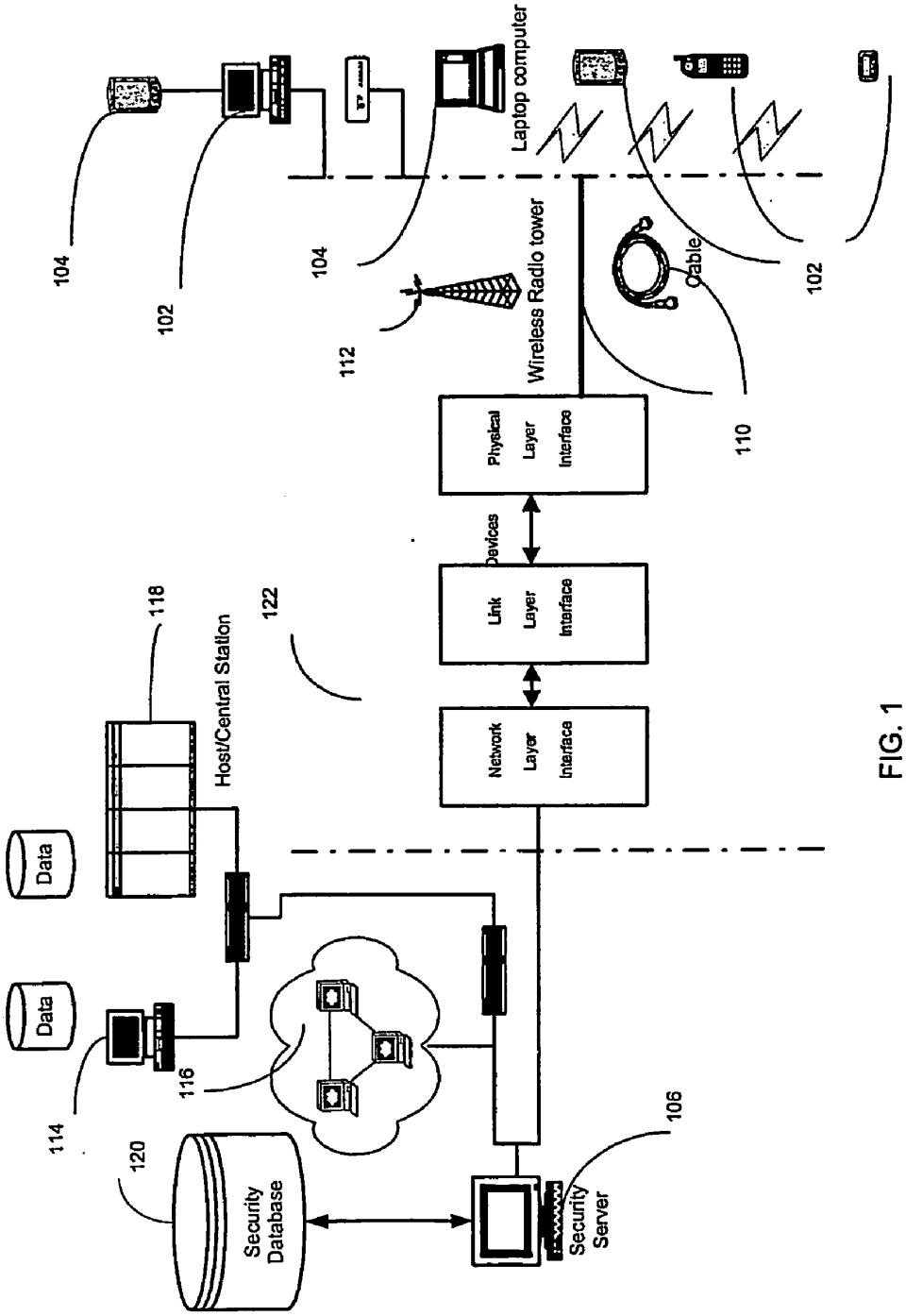
104
102
104
Laptop computer
102
112
Wireless Radio tower
Cable
110
Physical Layer Interface
Devices
Link Layer Interface
Network Layer Interface
118
Host/Central Station
122
Data
Data
114
116
120
Security Database
106
Security Server

FIG. 1

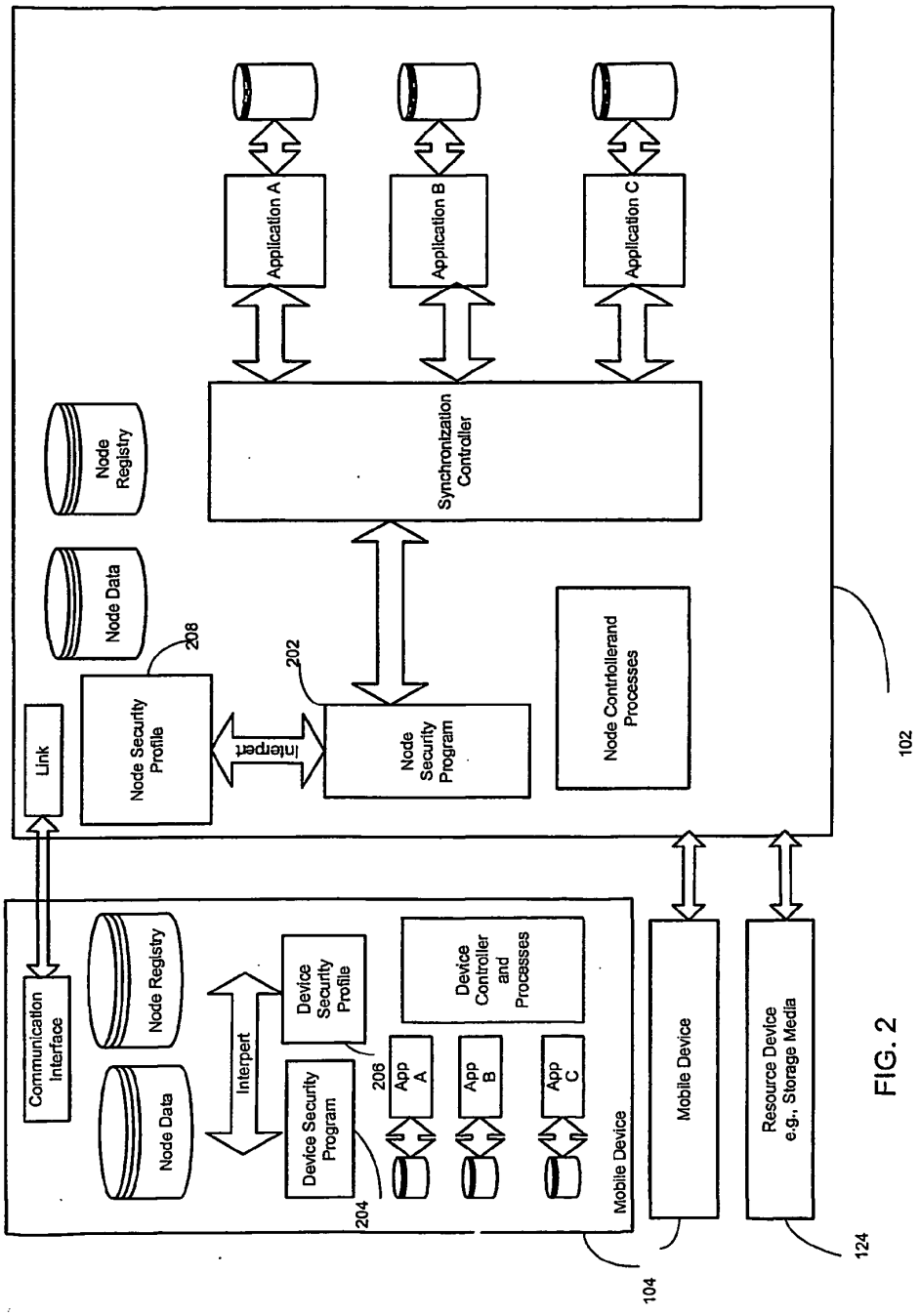
Application A
Application B
Application C
Synchronization Controller
Node Registry
Node Data
Link
Node Security Profile
Interpert
Node Security Program
Node Controllerand Processes
208
202
102
Communication Interface
Node Registry
Node Data
Interpert
Device Security Profile
Device Security Program
Device Controller and Processes
App A
App B
App C
206
204
Mobile Device
104
Mobile Device
Resource Device e.g., Storage Media
124

FIG. 2

FIG. 3


```
- <r_8F092CDD-DABB-452f-83E5-FC00849D74C7>
  - <PolicyEditor>
      <IsCommonPolicy value="true" />
      <DeviceType value="Pocket PC" />
      <CreationStamp value="2003-08-26 17:34:46" />
      <UserName value="Pocket PC" />
      <hotSyncName value="Pocket PC" />
      <Version value="21" />
      <MagicValue value="1004695628" />
      <SerialNumber value="N-082603AUVP2082" />
      <AdminPassword value="[1]" />
      <SessionKey value="ad21a791bed695fc300f87cfcc5666518d3dbc68" />
      <NewAdminPassword value="[1]" />
      <ChangePassword value="false" />
      <ForceGlobalPasswordChange value="false" />
      <ExpirationPeriod value="0" />
      <MinPasswordLength value="1" />
      <FolderName value="SecureFolder" />
      <CryptoMethod value="RC4" />
      <StorageSize value="65536" />
      <UserCanSeeSettings value="true" />
      <RestrictionStartTime value="0" />
      <RestrictionEndTime value="0" />
      <PasswordRestriction value="33686018" />
      <GlobalPasswordRestriction value="2" />
      <LocalPasswordRestriction value="2" />
      <BackdoorPasswordRestriction value="2" />
      <WipePasswordRestriction value="2" />
      <WorkingDays value="0" />
      <Company value="Trust Digital" />
      <Address value="" />
```

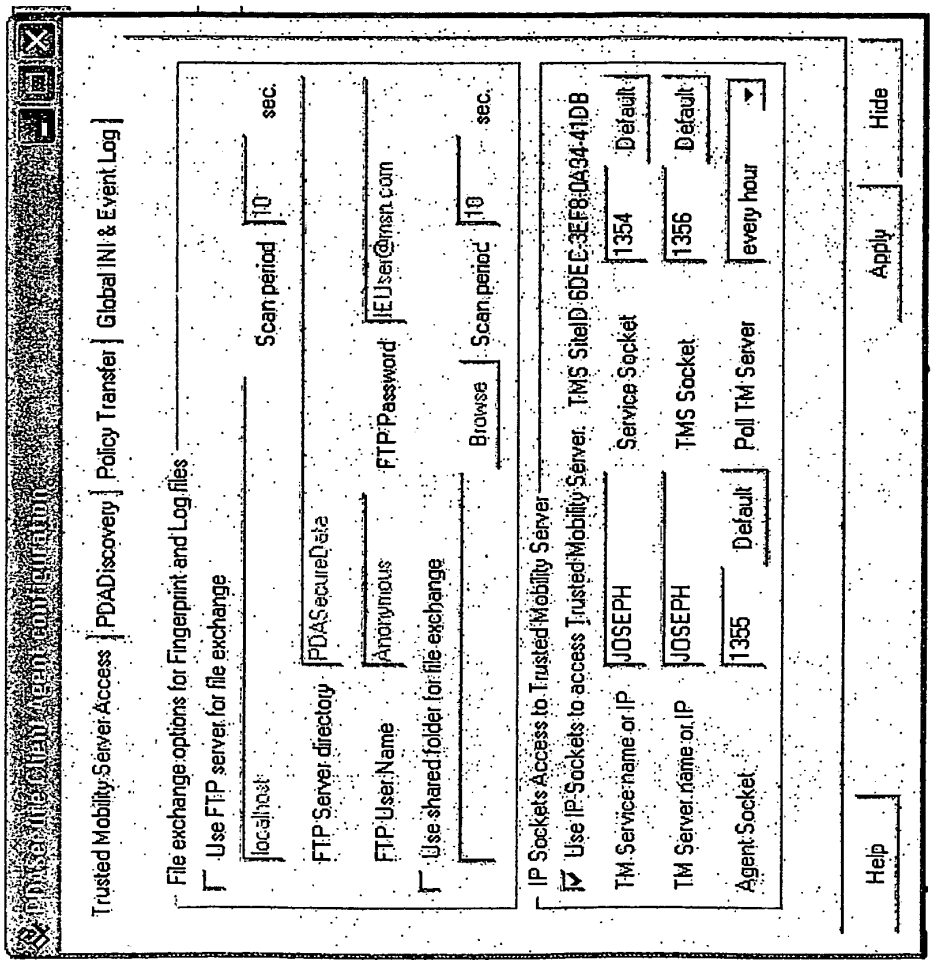
Trusted Mobility Server Access
PDADiscovery
Policy Transfer
Global INI & Event Log
File exchange options for Fingerprint and Log files
Use FTP server for file exchange
localhost
Scan period
10
sec.
FTP Server directory
PDASecureData
FTP User Name
Anonymous
FTP Password
IEUser@msn.com
Use shared folder for file exchange
Browse
Scan period
10
sec.
IP Sockets Access to Trusted Mobility Server
Use IP Sockets to access Trusted Mobility Server.
TMS SiteID 6DEE3EF8-0A94-41DB
TM Service name or IP
JOSEPH
Service Socket
1354
Default
TM Server name or IP
JOSEPH
TMS Socket
1356
Default
Agent Socket
1355
Default
Poll TM Server
every hour
Help
Apply
Hide

FIG. 4

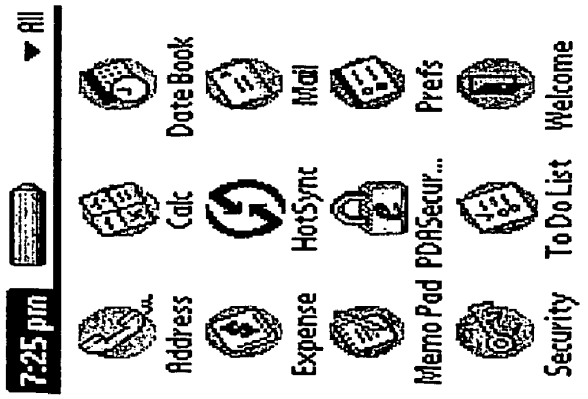
7:25 pm
All
Address
Calc
Date Book
Expense
HotSync
Mail
Memo Pad
PDASecur...
Prefs
Security
To Do List
Welcome

FIG. 5

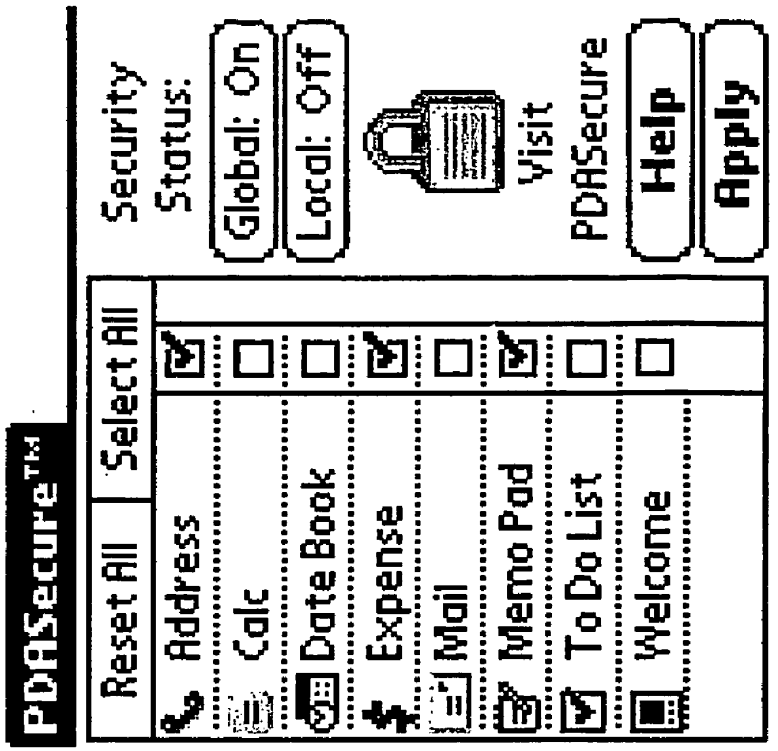
PDASecure™
Reset All
Select All
Address
Calc
Date Book
Expense
Mail
Memo Pad
To Do List
Welcome
Security Status:
Global: On
Local: Off
Visit PDASecure
Help
Apply

FIG. 6

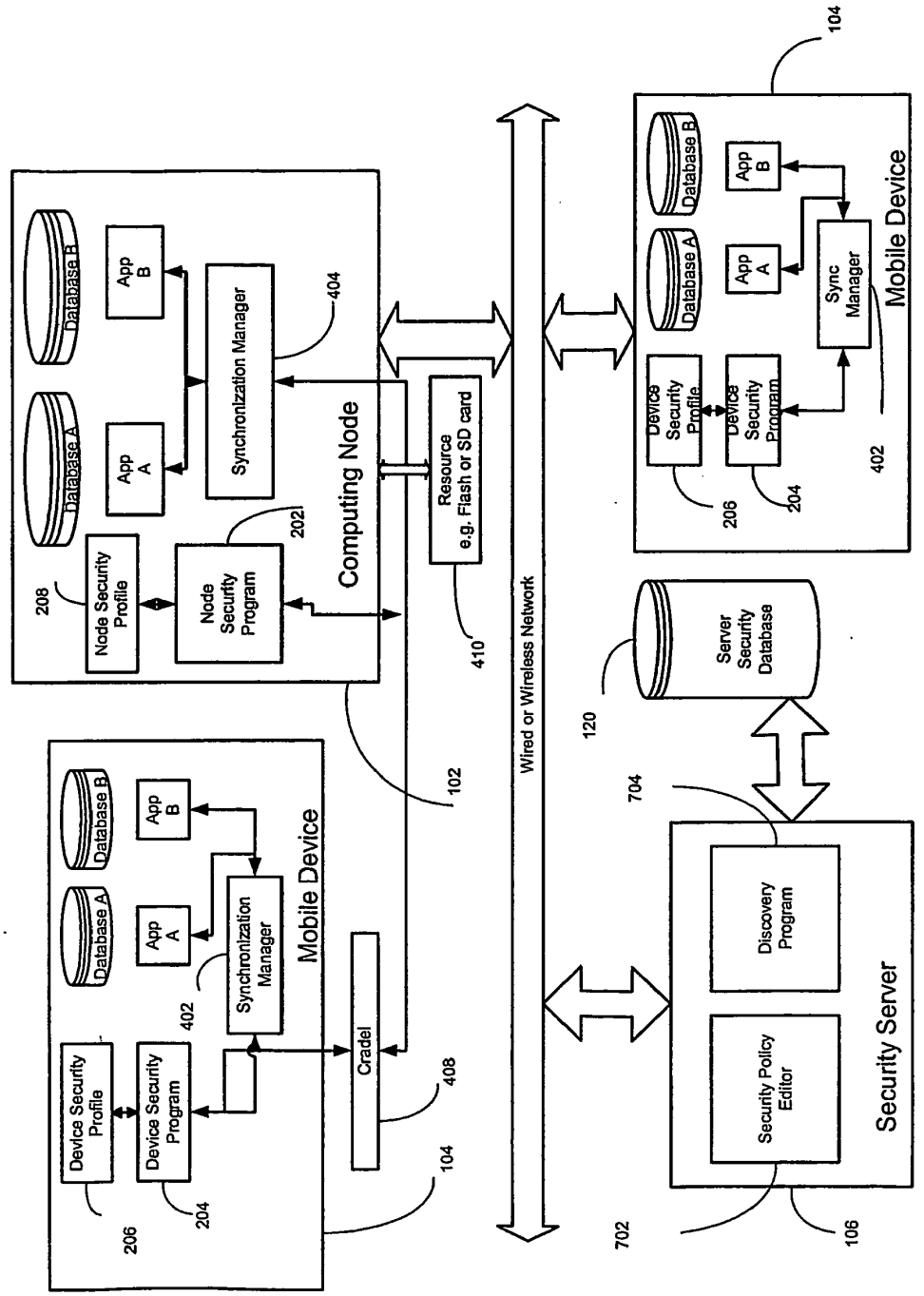
Computing Node
Database A
Database B
App A
App B
Synchronization Manager
Node Security Profile
Node Security Program
Resource e.g. Flash or SD card
Mobile Device
Device Security Profile
Device Security Program
Cradel
Wired or Wireless Network
Mobile Device
Database A
Database B
App A
App B
Sync Manager
Device Security Profile
Device Security Program
Server Security Database
Security Server
Discovery Program
Security Policy Editor
102
104
106
120
202
204
206
208
402
404
408
410
702
704

FIG. 7

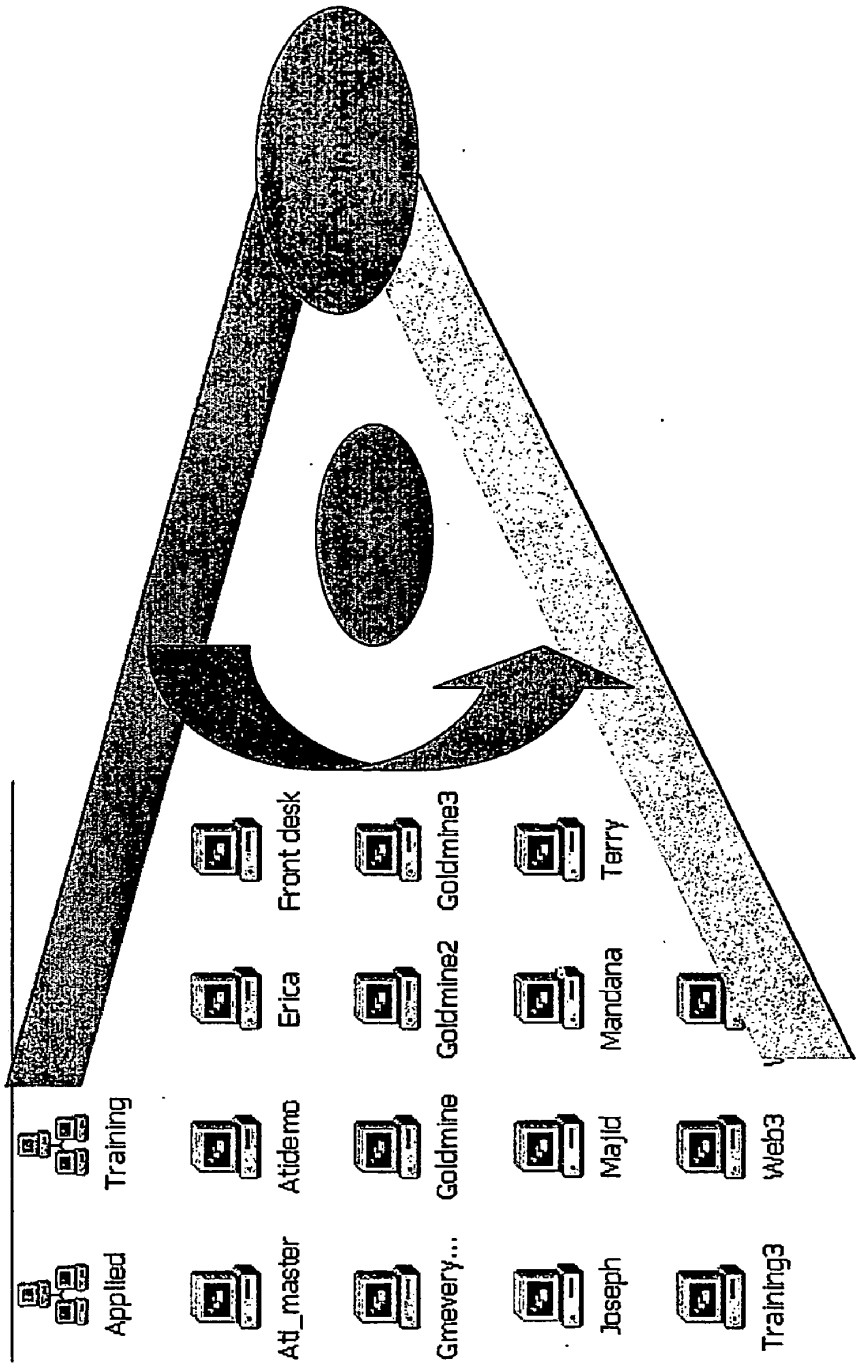
Applied
Training
Atl_master
Atldemo
Erica
Front desk
Gmevery...
Goldmine
Goldmine2
Goldmine3
Joseph
Majid
Mandana
Terry
Training3
Web3

FIG. 8

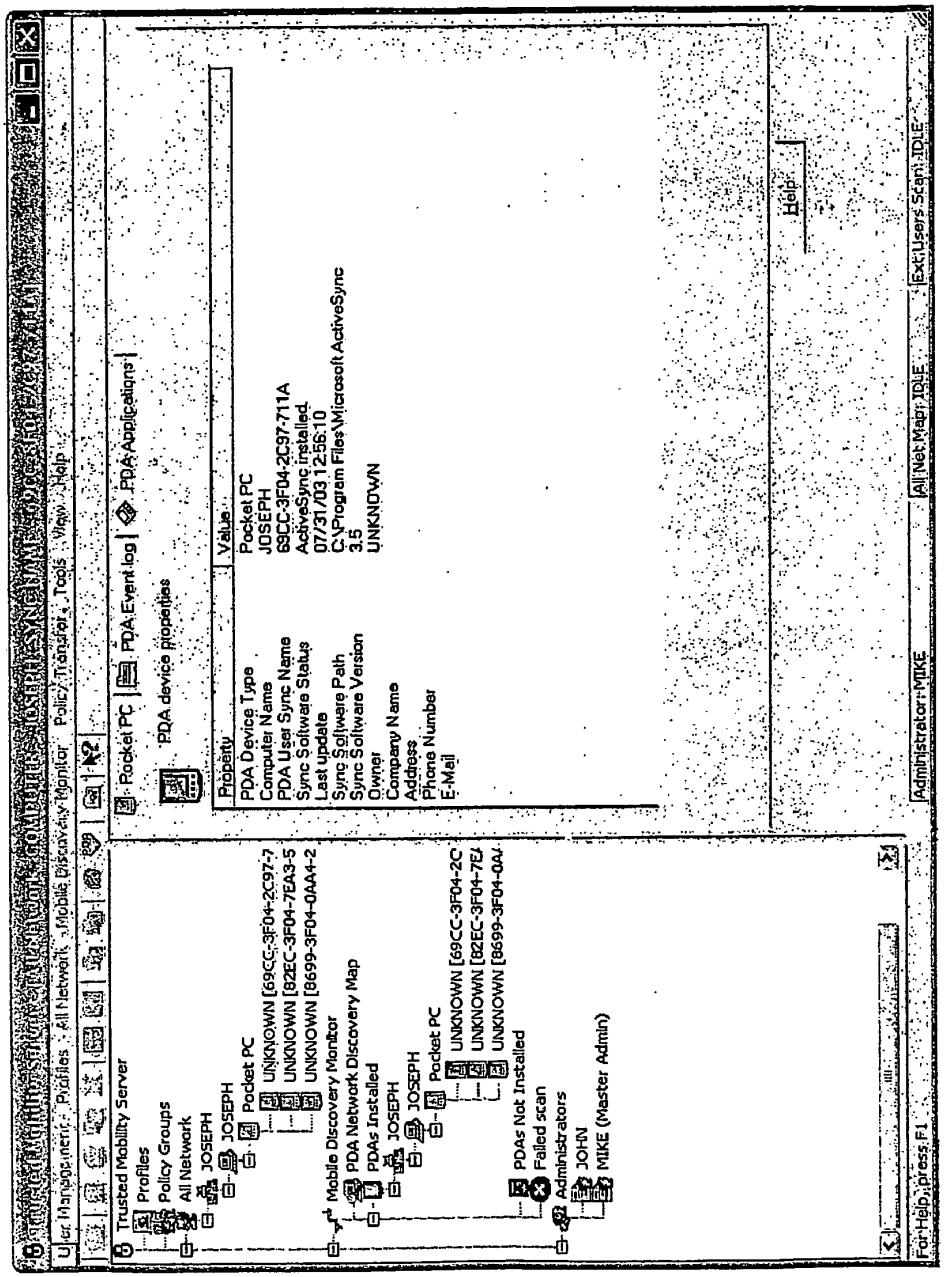
Trusted Mobility Server
Profiles
Policy Groups
All Network
JOSEPH
JOSEPH
Pocket PC
UNKNOWN [69CC-3F04-2C97-7
UNKNOWN [82EC-3F04-7EA3-5
UNKNOWN [8699-3F04-0AA4-2
Mobile Discovery Monitor
PDA Network Discovery Map
PDAs Installed
JOSEPH
JOSEPH
Pocket PC
UNKNOWN [69CC-3F04-2C
UNKNOWN [82EC-3F04-7E
UNKNOWN [8699-3F04-0A
PDAs Not Installed
Failed scan
Administrators
JOHN
MIKE (Master Admin)
Pocket PC
PDA device properties
PDA Applications
Property
Value
PDA Device Type
Computer Name
PDA User Sync Name
Sync Software Status
Last update
Sync Software Path
Sync Software Version
Owner
Company Name
Address
Phone Number
E-Mail
Pocket PC
JOSEPH
69CC-3F04-2C97-711A
ActiveSync installed
07/31/03 12:56:10
C:\Program Files\Microsoft ActiveSync
3.5
UNKNOWN
Help
For Help, press F1
Administrator+MIKE
All Net Map: IDLE
Ext: Users Scan: IDLE

FIG. 9

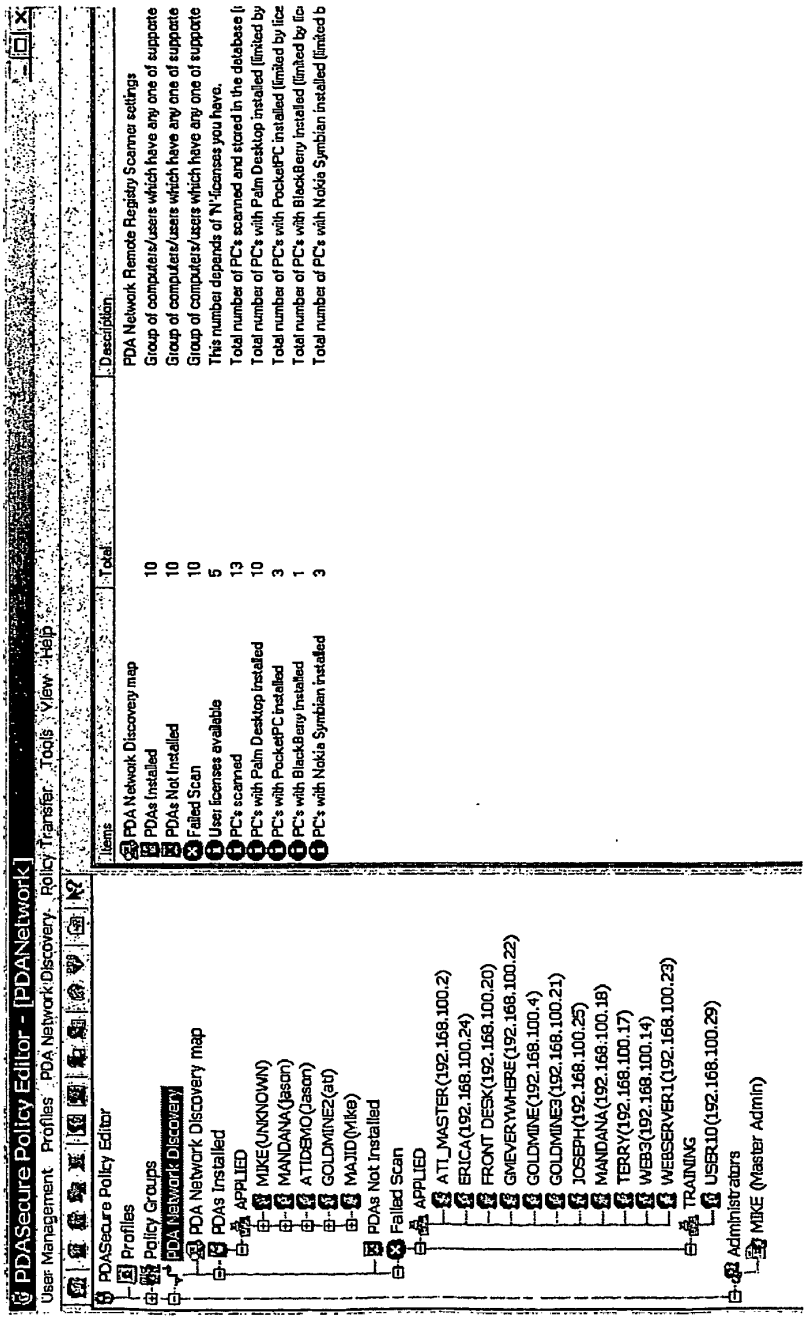
PDASecure Policy Editor - [PDANetwork]
User Management Profiles PDA Network Discovery Policy Transfer Tools View Help
PDASecure Policy Editor
Profiles
Policy Groups
PDA Network Discovery
PDA Network Discovery map
PDAs Installed
APPLIED
MIKE(UNKNOWN)
MANDANA(Jason)
ATIDEMO(Jason)
GOLDMINE2(atl)
MAJID(Mike)
PDAs Not Installed
Failed Scan
APPLIED
ATI_MASTER(192.168.100.2)
ERICA(192.168.100.24)
FRONT DESK(192.168.100.20)
GMEVERYWHERE(192.168.100.22)
GOLDMINE(192.168.100.4)
GOLDMINE3(192.168.100.21)
JOSEPH(192.168.100.25)
MANDANA(192.168.100.18)
TERRY(192.168.100.17)
WEB3(192.168.100.14)
WEBSERVER1(192.168.100.23)
TRAINING
USER10(192.168.100.29)
Administrators
MIKE (Master Admin)
Items Total Description
PDA Network Discovery map PDA Network Remote Registry Scanner settings
PDAs Installed 10 Group of computers/users which have any one of supporte
PDAs Not Installed 10 Group of computers/users which have any one of supporte
Failed Scan 10 Group of computers/users which have any one of supporte
User licenses available 5 This number depends of N-licenses you have.
PC's scanned 13 Total number of PC's scanned and stored in the database (i
PC's with Palm Desktop installed 10 Total number of PC's with Palm Desktop installed (limited by
PC's with PocketPC installed 3 Total number of PC's with PocketPC installed (limited by lice
PC's with BlackBerry installed 1 Total number of PC's with BlackBerry installed (limited by lic
PC's with Nokia Symbian installed 3 Total number of PC's with Nokia Symbian installed (limited b

FIG. 10

# ENTERPRISE-WIDE SECURITY SYSTEM FOR COMPUTER DEVICES

## TECHNICAL FIELD

[0001] The present invention relates in general to the field of data security and more particularly to providing data security to mobile devices.

## BACKGROUND

[0002] Recent advances in hardware and communication technologies have brought about the proliferation of powerful mobile devices ranging from notebook computers to much smaller personal digital assistants (PDAs) that operate over wired and wireless networks. These mobile devices (also known as handheld devices) operate on various platforms, such as palm computing platform, Windows CE, etc. Other types of mobile devices include paging and messaging devices, laptop computers, data-capable smart phones, etc. These devices can provide users with network access connectivity, which allows users to be quickly notified of changing events, and provide them with the resources necessary to respond even when in transit. In this way, users can be given the power to access mission critical information in quick and reliable manner. For example, data generated by client applications running on a wide variety of mobile devices may be transported over networks having various access protocols and wired and wireless links. One such protocol is Transmission Control Protocol/Internet Protocol (TCP/IP), which is designed to connect computer systems that use different operating systems and network technologies. Many popular network applications have been built directly on top of the TCP over the past decade, maling TCP/IP a de-facto network access protocol standard.

[0003] Many personal computer users use Personal Information Management (PN) applications such as an address book, a daily organizer, and a To-Do list application-on their personal computers and mobile devices. The data for these PIMS are stored in corresponding databases at the personal computers and mobile devices. Often, data in these databases must be synchronized in order to maintain data uniformity. The synchronization of data between devices of this type is known. For example, U.S. Pat. No. 6,006,274 describes a "Method and Apparatus Using a Pass Through Personal Computer Connected to Both a Local Communication Link and a Computer Network for Identifying and Synchronizing a Preferred Computer with a Portable Computer". Also, U.S. Pat. Nos. 6,000,000 and 5,884,323 both describe an "Extendible Method and Apparatus for Synchronizing Multiple Files on Two Different Computer Systems." Generally, the synchronization process is activated either by detecting a mobile device on a cradle or by manual press of a button. The synchronization process proceeds to synchronize data for several different applications that run on the mobile devices with data for corresponding application on other computers.

[0004] As society continues to adopt handheld devices as a standard computing platform and applications become more powerful with the standardization of wired and wireless computing, security threats to data stored in these types of mobile devices have become a serious concern and have created a heightened awareness and increased need for security. In fact, the U.S. Air Force Research Laboratory (AFRL), which develops some of the government's most advanced technologies, is crafting a policy to deal with security risks for data stored in mobile devices.

[0005] Various types of security software incorporating different data security encryption standards have been used in the past for securing network, desktop, laptop and PDA environments. On such suit of software is called Trusted Mobility Suite™ offered by Trust Digital™, which is used to set access control, encryption, and other parameters and push them to such mobile devices as Palm Pilot™, Pocket PC™, Blackberry™ or Symbian OS devices to protect against fraud and theft, sabotage, malicious hacking and other adverse exposure caused by data compromise. For example, at a network level, PDASecure™ Virtual Private Network provides secure communication among mobile devices or between mobile devices and routers and servers. Mobile DesktopSecure™ is a security and encryption software designed to protect files, data, applications, databases, directories, or an entire hard drive. It is also used to push security profiles containing defined security policies from a server to protect laptops and desktops within a network. Generally, Trusted Mobility Suite™ implements security using a graphical user interface (GUT) that allows administrators and users to secure all or selected applications. In this way, the users and administrators can selectively secure application(s) from unwanted and unauthorized access.

[0006] Trusted Mobility Suite™ manages data security for mobile devices at different levels. At a higher server level Trusted Mobility Server™ deploys, manages, and secures networks containing mobile devices using a centralized management solution. A policy-profile editor is used to set security parameters for groups of users based on defined security policies. At a lower device level PDASecure™ encrypts the data on the mobile device itself and offers-security management for those devices through the Trust Mobility Server. Once insalled on a mobile device, PDASecure™ provides for universal integration with all available mobile devices on the network, without the requirement for moving data into separate, secured applications. Also, Trusted Mobility Software Development Kit™ allows software developers to incorporate Trust Digital's Mobility Framework, comprising security, encryption, and centralized rule-based management technologies into their products, for mobile/PDA users.

[0007] Also, U.S. Pat. No. 6,158,010 discloses a system and method for maintaining security in a distributed computing environment that comprises a policy manager located on a server for managing and distributing a security policy, and an application guard located on a client for managing access to securable components as specified by the security policy. A global policy specifies access privileges of the user to securable components. The policy manager may then preferably distribute a local client policy based on the global policy to the client. An application guard located on the client then manages access to the securable components as specified by the local policy.

[0008] Implementation of comprehensive security policies in networks that supports large number of mobile devices has become an important issue for many enterprises, particularly in view of complexities associated with supporting various hardware and software platforms in terms of network architectures, protocols, device types, etc. Add to this

complexity, the various situations under which data security may be breached, either on the network side or on the device side. Additionally, due to availability of limited memory and processing resources, creating security programs for mobile devices is much more complicated than that of larger computers. Therefore, there exists a need for an efficient and flexible system and method for securing data in mobile devices used under varying operating environments.

## BRIEF DESCRIPTION OF DRAWINGS

[0009] **FIG. 1** is a diagram of a system that implements security control and management of the present invention.

[0010] **FIG. 2** is a block diagram of a computing node and devices that operate within the system shown in **FIG. 1**.

[0011] **FIG. 3** is an exemplary security profile for setting security parameters for the computing node and device.

[0012] **FIG. 4** is an exemplary diagram of an interface for setting security parameters for a computing node.

[0013] **FIG. 5** is a diagram for interfacing with applications in a mobile device.

[0014] **FIG. 6** is a diagram of an interface for setting security parameters in a mobile device.

[0015] **FIG. 7** is a block diagram of a an exemplary security system in accordance with the present invention.

[0016] **FIG. 8** is a diagram for applying a discovery method in accordance with one aspect of the present invention to a network.

[0017] **FIG. 9** is a diagram of an interface for information discovered in the discovery method of the invention.

[0018] **FIG. 10** is a diagram of a reporting interface based on information gathered by the discovery method of the invention.

## SUMMARY OF THE INVENTION

[0019] Briefly, according to one aspect, the present invention relates to securing a computer system that includes one or more mobile devices and a computing node. A node security program executed in the computing node interprets a node security profile. The node security profile has a format, including text, .ini., binary, XML, etc. that allows for interpretive processing by the node security program to determine one or more security parameters. The present invention then manages the security processes between the computing node and one or more mobile devices based on the security parameters as determined by interpreting the node security profile. The security processes can include any one of securing a storage device, data, file, program and application in either one of the computing node and the one or more mobile devices or other resources such as removable storage media that can be connected to the computing node or mobile devices. In effect, the computing node, based on the security parameters specified by the node security profile, protects both the computing node and the mobile devices (or other resources) from unauthorized incoming and outgoing data processes. These processes are secured by authorizing, denying, preventing, disabling, locking and password protecting data synchronization, data transfer, data query, data collection, network access, program execution, and data manipulation, including unauthorized deletions and additions.

[0020] According to some of the more detailed features of the present invention, security parameters can have attributes relating to a data, file, security profile, application and program. Such attributes can be expressed in terms of size and type. The security parameter can relate to temporal or position attributes. Temporal attributes include date, minute, hour, week, month and year. Position attributes include position determined by various positioning techniques, e.g. GPS, zip code, address, region, and location. The security parameters can also be expressed in terms of a serial number, a model number, a software license number, mobile device type, computing node type, connection type and network type, wither wired or wireless network. The connection types supported by the invention include direct connection and an off-line connection between the computing node and the one or more mobile devices or resources. The security parameter can also be expressed in terms physical address, network resource ID, IP address, domain name, client station ID, mobile device ID or server ID. The security parameters can also relate to handling guest and unknown devices as well as managing a VPN.

[0021] According yet other more detailed features of the present invention, a device security profile, which sets device security parameters, can be transferred to the mobile devices by accessing a server station, central station or computing node. The device security profile is interpreted by a device security program running on the mobile device to determine the security parameters that control the mobile device. The device security profile can also be transferred based on temporal or position attributes and be periodically updated as necessary. The device security profile can also be transferred as a part of a data synchronization process between the computing node and a mobile device. The present invention can lock unauthorized or under some circumstances even authorized mobile devices attempting to access the system, for example by transmitting a security software that locks the intruding device. The node security profile and device security profiles can be transmitted using push or pull technology or an over the air protocol.

[0022] According to another aspect of the present invention a discovery method for mobile devices discovers information regarding the mobile devices by running a discovery program either remotely or locally. The discovery method of the invention includes detecting mobile device types, connection profiles, and location of mobile devices, among other things. The mobile device information are detected based on a registry resource, a file resource, a process resource, a network management parameter, a data format, a packet format, a synchronization log entry, a directory structure or a database entry.

[0023] According to other more detailed features of this aspect of the present invention, the discovery method requires scanning the computer system based on a scan profile to detect the one or more mobile devices. The scan profile defines discovery rules such as network, domain, IP address, netmask, and computer identity to be scanned (or not to be scanned). The gathered information can be grouped in a variety of formats, such as based on mobile devices types. The information gathered as a result can be analyzed, stored, reported or displayed.

DETAILED DESCRIPTION OF TIE INVENTION

[0024] Overview of the Present Invention

[0025] The system and method for securing data in mobile devices of the present invention includes a computing node and a plurality of mobile devices, as later defined below. A node security program or agent executed in the computing node interfaces with a device security program executed at a mobile device, if one exists or interface with device resources. The node security program or agent can also interface with a node security program executed at another computing node. The computing node or alternatively a security server can be responsible for sending information and created profiles to other devices, nodes, or agents, and for controlling the flow of information and data with devices, nodes or agents.

[0026] The node security program interprets a node security profile to control data synchronization, data transfer, data query, data collection, file and program access and execution or device discovery (as further described below) in connection with one or more mobile devices or other external resource discovery, for example external storage discovery like USB flash cards and memory. For example, the node security program can prevent synchronization of data between the mobile device and the computing node if not authorized in accordance with the node security profile information. Also, the node security program can prevent the mobile device from collecting data, run programs and access files from a connected network. The node security program can also prevent any resource on the network or computing node to access resources, files, execute program, collect and query data on the mobile device, if not authorized in accordance with the security profile information.

[0027] The information contained in the node security profile can be used to determine whether a client station acting as a computing node is authorized to transfer a device security profile that sets the security parameters for a mobile device. If authorized, the device security profile is transferred or otherwise copied from the computing node to the mobile device. A device security program, which is executed in the mobile device, interprets the device security profile, for example, as an .ini or XML file, to set the transferred security parameters for the mobile device. If not authorized, the node security program can lock the unauthorized mobile device, for example, by transmitting a device security application to be executed at the unauthorized mobile device, among other things. The device security profile can lock the device for usage, disable IR beam, Bluetooth, networking, sound and voice information.

[0028] The node and device security profiles can define the security parameters in accordance with a defined security policy. As such, the device and/or node security profiles can be created at a central station, such as a server station, using a policy editor program. The security policy can also be created, maintained and enforced at the computing nodes or mobile devices. The created device and node security profiles can be transferred to the computing node or the mobile devices over a network using a push technology, for example. Alternatively, upon request, a pull technology may be used, for example in a wired/wireless network, to transfer the node and device security profiles to wired/wireless mobile devices and computing nodes. Under any one of these arrangements, the computing node security profile and the device security profile can be updated periodically by checking one or more designated web sites or accessing a central station or server station, for example LDAP/Active, database, file directory repository. In a similar manner, the device security profile can be updated by accessing the computing node or accessing a central station or server station. Also, more than one security profiles can be created, transferred and stored on the mobile device.

[0029] Another aspect of the present invention is a discovery system and method for managing a computer network which involves scanning the network based on a scan profile to locate one or more mobile devices or device types belonging to the network. For example, the scan profile can contain information regarding at least one of network, domain and computer identity to be scanned. In the discovery process of the invention, a node, computing node, IP address, or domain can be either included or excluded from being scanned. As such, the scan profile can contain information regarding at least one of network, domain and computer identity not to be scanned. The type of the located mobile device is determined based on entries in an application registry, synchronization log, directory structure, a database or other protocols for example SNMP. The mobile device type information gathered through the discovery process can be used for managing security in the computer network. The located mobile devices can be grouped by type, domain, IP address for reporting and display purposes, identifying welcomed and un-welcomed mobile device as well as risk and vulnerability status.

[0030] Security Management System

[0031] Referring to **FIG. 1**, an exemplary system **100** that advantageously implements the present invention in a network is shown. The system of the invention supports security amongst computing nodes **102** and mobile devices **104**, which are also referred to as user-devices. The computing nodes **102** can be any type of wired or wireless network node, a client station connected to a security application server **106** directly or via a network **122**. The computing node **102** can also be a stand alone computer. The mobile devices **104** can be of any type. Under one feature of the present invention, various types of mobile devices operating within the system **100** can be discovered, located or detected for managing security. For example, the present invention can support any handheld device, personal digital assistant, phone, smart phone, pager, etc.

[0032] Under the present invention various types of data, files and profiles can be transferred between the computing nodes **102** and mobile devices **104** over any supported transport layer, link, or physical connection. The transport protocol can be any suitable protocol, including TCP/IP, various telephony transport protocols, etc. The links can be wired or wireless links **110**, **112**. The wired links **110** can be twisted pair, coaxial cable, optical cable, etc. As described later in more detail, the wireless links **112** can support any number of over-the-air protocols.

[0033] In an exemplary embodiment, the system **100** of the invention is implemented over a network that includes server stations **114**, client stations **116**, and a host or central station **118** either directly or via any collection of interconnected (public and/or private) networks that are linked together by a set of standard or proprietary protocols. The system of the present invention can also support various

wireless links with defined protocols. Examples of such protocols include any one of IEEE 802X, GSM, IS-136, IS-95, Bluetooth, etc.

[0034] The present invention may also be implemented over the Internet, a distributed network that supports the World Wide Web ("Web"). The Web refers generally to both (i) a distributed collection of inter-linked, user-viewable hypertext documents that are accessible via the Internet, and (ii) the user and server software components which provide user access to such documents using standardized Internet protocols. A Web Site is a computer system that serves informational content over a network using the standard protocols of the World Wide Web. Typically, a Web site corresponds to a particular Internet domain name and includes the content associated with a particular organization.

[0035] As shown in **FIG. 1**, the security application server **106** can access a security database **120**, which stores various data, including security profiles for the computing nodes **102** and mobile devices **104**. The database **120** can also store collected and discovered information from computing nodes **102** and mobile devices **104**, including event log and audit log information, etc. The security application server **106** communicates with such devices through a network layer interface **122**. The network used in connection with the present invention can use any one of open- or proprietary-network standards. In a preferred embodiment, the system interconnections are based on an open system interconnection (OSI) model as proposed by the International Standards Organization (ISO).

[0036] It should be noted that the present invention need not be implemented over a network. In fact, the present invention can use a computing node alone or as a part of a network as long as it possesses the processing power to execute programs and applications in accordance with the present invention. When the computing node is not connected to any network the mobile device access between the computing node **102** and the mobile device **104** is an off-line access.

[0037] Managing Security Between Computing Node and Mobile Devices

[0038] Referring to **FIG. 2**, a block diagram for managing security between the computing node **102**, mobile devices **104** and the resource device **124** is shown. A node security program or agent **202** is executed in the computing node **102** for interfacing with a corresponding device security program or agent **204** executed at the mobile device **104** or resource device **124**. The mobile device security is dictated by a device security profile **206** that is interpreted by the device security program **204**. The node security program **202** interprets a node security profile **208** to determine one or more security parameters for managing the security between the computing node **102**, resource device **124** and mobile devices **104**, including controlling transfer of data, files, device profiles, applications and programs between the computing node **102**, resource device **124** and the mobile devices **104**. For example, the security parameters derived from interpreting the node security profile **208** may require preventing data synchronization between one or both of the mobile device **104** and resource device **124**. The computing node **102** acts as a single point communication gateway between the mobile devices **104** and other network resources **124**. One such resource can be a storage device, e.g., a USB enabled flash or SD card. Such resources can include a synchronization program. The node security profile **208** can enable the computing node security program **202** to monitor, scan, query, accept,deny, password protect a request to create, maintain, terminate, modify, a communication link or activity. Based on security parameters determined by interpreting the node security profile **208**, the node security program **202** can prevent remote execution, utilization of any application or file on the mobile device **104** or resources **124**. Based on the determined security parameters, the computing node security program **202** can enable or disable synchronizing particular kind of data. For example, the interpreted security parameters can specify that address book data cannot be synchronized.

[0039] As such, the security parameter can relates to authorizing synchronization with the computing node **102** or other types of transfer of data, files and programs applications between the computing node **102** and devices **104** and **124**. The information contained in the node security profile **208** can include information that alone or in combination identify an authorized or unauthorized computing node, an authorized or unauthorized user, an authorized or unauthorized mobile device, an authorized or unauthorized central station, or an authorized or unauthorized network or resource, such as an external storage devices. The identity may be specified by physical address, serial number, model number, device type, server or a network resource ID, software license number (registration number), user ID etc. The authorized or unauthorized computing node can be specified relative to mobile device parameters, such as device type, etc. For example, certain computing nodes **102** may be authorized to synchronize data with certain specified mobile device types, but not authorized to synchronize data with other device types and vice versa.

[0040] Computing Node Security

[0041] The computing node **102** manages all aspect of data, file, application, and device profile transfer acting as a gateway for all types of device security management. Among other things, the computing node **102** is responsible for control of mobile device data in to and out of the computing node based on security parameters contained in the node security profile **208**.

[0042] As stated above, the computing node **102** can be any type of wired or wireless network node, including a client station connected to the security server **106** directly or via a wired or wireless network. In its simplest form, the computing node **102** can be a stand alone computer station. Also, the computing node **102** can itself be a mobile device **102** that is responsible for managing security for other mobile devices **104**. As stated above, the security parameters of the computing node **102** is defined by the node security profile **208**. For example, the node security profile **208** can set user access rights by enabling/disabling or password protecting users' ability to configure the computing node **104** and/or its profile. Depending upon the security parameters set in the node security profile **208**, corresponding changes are made to the registry key, file, or database entries of the computing node **102** or its configuration file to enforce the node security profile parameters. Registry key, file, or database entries along with functionality associated with the computing node **102** are used to control and monitor all data

synchronization, transfer, access, modification, or execution of files, applications, programs., profiles (e.g., security profiles) and processes that occur through the computing node by any data transport that relates to applications that synchronize data with the devices **104** and **124**. The computing node security program **202** can also check, for example, periodically, for security profile updates.

[**0043**] Under another arrangement, the computing node security program **202** can be deployed for a given IP range, network domain or user list automatically. For example, the security server **106** can detect and identify the computing nodes **102** that do not have or execute corresponding node security programs **202** within an IP range, network domain or user list. Once such determination is made, the server **106** can automatically transmit the node security programs **208** to the so detected IP range, network domain or user list.

[**0044**] The computing node profile can also have a validation life span that could indicate a time frame that the profile can be used or applied. This life span can be indefinite meaning that it can be used at any time or can have a range of date and time.

[**0045**] Device Security

[**0046**] In contrast with the node security profile **208**, which sets the computing node security parameters, the device security profile **206** sets the security parameters for the devices **104** and **124**, as interpreted by the device security programs **204**. The device security parameters include encryption preferences, global (device) password, local (application or resource) password, access control to applications and resources, access control to the device, integrity protection against hackers and traps, file encryption options, port protection, communication protection (i.e., send and receive), ability to use wireless connections like Wi-Fi, 802.11, Bluetooth, controlling the content of the device like restricting installing of some applications, etc.

[**0047**] In one embodiment of the invention, the information contained in the node security profile **208** can be used to determine whether the computing node **102** is authorized to transfer a device security profile **206** to a mobile device **104**. For example, upon a request initiated by the mobile device **104** when it connects it to the computing nodes **102**. If the computing node **102** is an authorized computing node, as further described below, upon request, the device security profile **206** is copied from the computing node **102** to the mobile device **104** using an established wired or wireless link. Alternatively, upon connection or detection of connection to a security policy repository, server or computing node, the mobile device can request creation of a device security profile in real-time bases or query to determine whether a device security profile has been created for it at any time in past to be utilized when requested.

[**0048**] The device security program **204** executed in the mobile device **104** interprets the transferred device security profile **206**, as an .ini or XML file for example, to set the transferred security parameters for the mobile device **104**. If the computing node **102** is not authorized, the node security program **202** can lock the mobile device, for example, by transmitting a device security application to be executed at the unauthorized mobile device, wipe or erase data on the device, or require system administrator intervention, among other things. Both the device and node security profiles can be any type of file that can be interpreted by corresponding device and node security programs, for example a text or .ini file or a binary file or XML file.

[**0049**] According to another feature of the present invention the device security is also controlled temporarily in terms of time, for example, based on year, month, day, hour minute. The device security can also be based on location as determined by any one of well known positioning or location determination techniques. Under this arrangement, device security profiles **206** can be created dynamically based on time and/or location of the device The created profiles can be transferred to the devices **104** or **124** using any one of over-the-air protocols, for example. The security profiles (node or device) can be pre-loaded and activated as needed. Under another arrangement, the device security program **204** can be deployed for a given IP range, network domain or user list, or synchronization ID automatically. For example, the security server **106** or computing node **102** can detect and identify mobile devices **104** that do not have or execute corresponding device security programs **206** within the IP range, network domain or user list. Once such determination is made, the node security program **202** can automatically transmit the device security programs **204** to the so detected IP range, network domain, user list, or synchronization ID.

[**0050**] Under another arrangement, the computing node profile has a validation life span that could indicate a time flame that the profile can be used or applied. This life span can be indefinite meaning that it can be used at any time or can have a range of date and time.

[**0051**] Under another arrangement, multiple device profile can be loaded, stored and transferred to the mobile device, resources. Only one profile can be loaded and active at a time. The appropriate profile can become active based on time, day, date, location or device sensing equipment. For example, as soon as the mobile device is moved to a secure location an external device sends appropriate signals to the mobile device to active a different device profile.

[**0052**] Creating Security Profiles

[**0053**] A node or device security profile **206** or **208** defines one or more security features used for providing various security quality features and characteristics within the computer system **100** of the present invention. The security profiles **206**,**208** can be created at the central station **118**, the server station **106** or at a computing node **102**. As stated above, the node security profile **208** defines the parameters for managing security in accordance with the present invention. The node security profile **208** is interpreted by the node security program **202** to determine the security parameters. The present invention can use any suitable tool for creating security profiles that have defined interpretation rules, such those that govern .ini or XML files. The security profiles can be edited using corresponding editing tools. If the security profile is a text profile, for example, a text editor can be used for creating the node profile. The security profile can also be a binary or XML file interpreted by the node security program or agent based on defined rules.

[**0054**] **FIG. 3** shows an exemplary security profile. **FIG. 4** illustrates an exemplary interface for setting security parameters for a computing node in accordance with the invention. For example, the server access tab shows security

parameters for communicating with a server. Other shown tabs can be used to set device discovery, security policy transfer and event log parameters. **FIG. 5** illustrates an interface on a mobile device for activating various applications. **FIG. 6** illustrates an interface for a device security profile that applies security parameters to an "Address" and "Expense" application.

[**0055**] The security of system **100** can be managed based on a centrally promulgated security policy. Such security policy can be defined for a network or a public or private institution, such as corporations, schools, governmental agencies, etc. In one embodiment, the security profile can be created by running an editor program **702** (shown in **FIG. 7**), which is designed to create security profiles based on a defined security policy. The created node security profiles **208** can be transferred to one or more computing nodes **104** over a network, for example, using a push or pull technology. The transfer of the security profiles can be relative to an IP range, a subnet mask or a network domain name. A pull technology may be used, for example, in a wireless network, to transfer node and device security profiles to wireless mobile devices and computing nodes upon request. Under any one of these arrangements, the computing node security profile **208** and the device security profile **206** can be updated periodically by checking one or more designated web/ftp sites or accessing a central station or server station. In a similar manner, the device security profile **206** can be updated by accessing the computing node **102**. The device security program **204** can also automatically request device security profile **206** in real time.

[**0056**] Synchronization

[**0057**] **FIG. 7** illustrates a logical block diagram for the security system and method of the present invention. In one exemplary embodiment, the system and method of the invention provide security for mobile devices **104** a resource device **124** that share information with computing nodes **102** that store data for corresponding applications running on each device. For example, a mobile device can execute two applications: a calendar application A and a contact application B for calendar and contact management. Calendar and contact information for each application running in the mobile device is stored in calendar databases A and contact database B, respectively. Similarly, the computing node **102** can execute corresponding calendar applications A and contact application B, where calendar and contact information are stored in corresponding databases A and B in the computing device. In order to share data related to these applications, the databases A and B of the mobile device are synchronized with the databases A and B of the computing node. A synchronization program **402** on the mobile device **104** and a peer synchronization program **404** on the computing node **102** perform the necessary operations to synchronize information stored in the databases. A synchronization system for mobile devices is described in U.S. Pat. No. 5,727,202 entitled "Method and Apparatus for Synchronizing Multiple Files On Two Different Computer Systems."

[**0058**] Synchronization Security

[**0059**] The present invention provides security under various environments including: 1) securing one/multiple mobile devices that synchronize with a single computing node, for example, through a cradle, 2) securing a single mobile device that synchronizes with multiple local computing nodes, for example, multiple client stations, 3) securing a mobile device that synchronizes with a remote computing node, such as a server, across a network using a local computing node, such as a client station, and 4) securing a mobile device synchronizing with a remote computing node through a wired or wireless network. The present invention handles each different environment appropriately with minimal user interaction.

[**0060**] In its simplest form, the system of the invention comprises a mobile device **25104** coupled to a computing node **102**, which is a stand alone computer station.

[**0061**] The coupling is through a connection of the computer station and a mobile device cradle **408** that is used for data synchronization between the mobile device **104** and the computing node **102**. A user drops the mobile device **104** into the cradle **408** and activates a button to initiate synchronization. The button activation causes **30** a synchronization program on the mobile device to be executed in accordance with security parameters defined b the node security profile **208**. For example, the node security profile **206** can define the ability to block, not to block, to prevent, to allow, to password protect, to enable, or to disable the synchronization operation, data transfer, operations to be performed as well as applications and data to be used during synchronization.

[**0062**] As shown in **FIG. 7**, other computers such as server and client stations can also be coupled to the network The mobile devices **104** can synchronize either with a local computing node **102** or a remote computing node across the network. Once the security of provisions are verified, the synchronization program on the mobile device works with a peer synchronization program on the computing node.

[**0063**] Authorized Synchronization Station

[**0064**] According to this feature of the invention, computing nodes **102** can be designated as authorized or unauthorized synchronization stations within an environment. A system administrator can designate specific computing nodes as authorized for one or more users or group of users, but unauthorized for other users or group of users. For example, the administrator can restrict certain users from synchronizing on stations located in a defined room or area. Similarly, the administrator can allow specific computing nodes **102** to be used as authorized synchronization stations. This allows for better implementation of security and to insure unauthorized access to data by synchronizing on different unauthorized systems does not take place.

[**0065**] The node security profile **208** defines the parameters for synchronization actions that can or can not be performed on the computing node. The list of authorized computing nodes can be displayed on nodes or servers. A computing node can be enabled/disabled as a synchronization station as required based on administration request or real-time request from other resources. The device security profile **206** stored on the mobile devices **104** can also include parameters for managing synchronization between the mobile device and the computing node.

[**0066**] Mobile Device Discovery

[**0067**] According to another aspect of the invention, a discovery process is used to discover, detect, or locate mobile devices **104**, resources based on specified discovery

rules. Various methods can be used to detect and discover the mobile devices **104** or resource devices **124**. The discovery of the mobile devices can be done remotely or locally. Remote discovery can be within a network that comprises domains, with each domain including a number of computing nodes. Under this arrangement, the discovery, detection and location of the mobile devices, resources can be controlled by a central discovery program **704** or agent, for example, one that runs at the security server **106**. Also, the discovery method of the present invention can be a local discovery process, where the mobile devices **102** are discovered or detected locally at a computing node by running a discovery agent in the computing node locally as opposed to a centrally. The discovery process can detect and track, how a mobile device or external resource is used and on which systems a particular resource or mobile device has synchronized data. The discovery can also detect foreign and unknown devices ( that have not been attached to the network earlier) entering a wired or wireless network of an organization.

[**0068**] **FIG. 8** illustrates a diagram for a system that uses the discovery method of the present invention. According to one embodiment, a system and method for managing a computer network involves scanning the network based on a scan profile that comprises defined discovery rules. Based on the discovery rules, this aspect of the invention discovers, detects, or locates one or more mobile devices or other resources that at one time or another have attached to the system. One such resource can be a storage device (fixed or removable) that contains sensitive information. For example, USB flash, memory or SD card storage media (or any other resource) that can attached to the computing node **102** or the mobile devices **104** using well known protocols. Thus, the discovery method of the present invention can discover and secure the storage media or any other resource that attach to the computing node or mobile devices.

[**0069**] The scan profile can contain information regarding at least one of network, domain and computing node identity to be scanned. Alternatively, the scan profile can contain information regarding at least one of network, domain and computing node identity not to be scanned. The discovery program scans the domains or computing nodes based on the scan profile to discover, detect or locate the mobile devices, e.g., based on a domain identity. Thus, the scan profile defines the parameters for connecting to domains, computing nodes and mobile devices.

[**0070**] In a remote discovery process, the discovery program running on the central station **118** on server **106** detects the domains of the network. After detecting the domains, local and/or remote the computing nodes **102** within the domain are detected by attempts to establish corresponding connections to the computing nodes. Depending on the computing node, the connections can be authenticated or unauthenticated. If an attempt to establish an unauthenticated connection is not successful, an attempt is made to establish authenticated connection. The connection with each computing node can be authenticated using known authentication features, such as a set of password, for example, the last used password to access the computing node. If authentication using the last used password is not successful, pre-defined or selected passwords can be used to access the resources. If no valid password is available, the administrator may be asked to perform password authentication. Once the authenticated or un-authenticated connection is made, the computing node is accessed to detect mobile devices or resources.

[**0071**] Information regarding discovered, detected, or located mobile device or resources is determined based on any one of a registry resource, a file resource, a process resource, a network management parameter, a communication protocol parameter, a data format, a packet format, a synchronization log entry, a directory structure or a database entry. For example, the application registries on the computing node **102** can be interrogated to determine what type of devices have attached to the node. More specifically, registry resources are processed to detect device type in terms of whether the detected mobile devices is a Palm, Nokia, Research In Motion (RIM), or Windows CE device. The mobile devices or external resources can leave an imprint in the registry structure any time they attach to a computing node. The imprint is not erased when a device disconnects. Thus, any device that has attached to the computing node at any time in the past can be detected and identified. Alternatively, the devices can be identified based on connecting to local and remote processes, objects and process requests or connecting to remote drives, file objects, etc.

[**0072**] **FIG. 9** illustrates an interface that shows the discovered mobile devices. As shown, the computing node "JOSEPH" has a pocket PC attachment directory with a number of unknown mobile devices that at one time or another have attached to the computing node. As shown, information determined by the discovery process of the present invention include device type, device identity, synchronization software type, synchronization software availability, synchronization software location, synchronization software version number.

[**0073**] Also determined are information regarding previous synchronization information such as data and time stamp of last synchronization, the type of device used during previous synchronization, synchronization D). Moreover, information regarding device owner can also be determined by the discovery process of the present invention including e.g., name, address, company, etc. Still other determined information include type applications and files installed or used on the mobile device with file size file name, file attribute, and manufacturer information, time stamp of all completed and incomplete synchronization and data access and connections performed or made as well as the type of data and information transferred to and from mobile device and other resources relative to the computing node.

[**0074**] Also, network management parameters, such as those defined by the Simple Network Management Protocol (SNMP) can be used to locate, detect and discover the types of the mobile devices or resources that have attached to the computing node. Also, the data and packet format as well as associated transport and network protocol parameters, e.g., TCP, UDP, and IP can be used to locate, detect or discover the type of mobile devices. Such mobile device type information is used for managing security in the computer network. By processing any of the gathered information, the discovery system and method of the present invention provides an, effective management tool for managing all security aspects of any computer system An exemplary report derived from gathered information by the discovery method of the invention is shown in **FIG. 10**.

[0075] Under another arrangement, mobile devices or resources are discovered by a discovery program or agent that runs on the server, only when the mobile devices connect to the computing node or using registry, file, process resources, as explained above. Under yet another arrangement, the discovery program runs as an agent in the computing node. The discovery agent in the computing node thus can discover and control unwelcomed devices and resources, based on a node security profile, which defines synchronization and data transfer rules. The detected discovery data can be stored in secure files and transferred to the security server for processing.

[0076] The discovery rules for detecting or locating the mobile devices or resources can be either hard-coded in the software or defined as a discovery or scan profile. Such profiles can be updated on-demand, manually or automatically as required to get an updated discovery or scan profile.

Software Development Kit (SDK)

[0077] An SDK provides programming interface to allow the software developers the ability to integrate the present invention with the other platform provided with the system.

[0078] The security system of the present invention can be implemented using defined application programming interfaces (APIs). APIs are contained in a library as a set of software functions that perform various security tasks. Also defined are the structures and parameters needed to correctly call these public functions.

[0079] The SDK would help any third party developer to develop security solutions. It eliminates the need to write the encryption libraries from scratch The input and output parameters of these API calls are clearly defined so that they can be easily embedded in any existing source code. The SDK also helps in providing customized solutions to unique problems encountered by the customers.

| CryptoFileAccess | class members |
|---|---|
| | Construction |
| CryptoFileAccess | Construct CryptoFileAccess object. |
| bdehart@MWE.com | |
| Open | Creates or opens a file object. |
| Close | Closes a file and deletes the object |
| | Input/output |
| Read | Reads (unbuffered) data from a file at the current file position. |
| Write | Writes (unbuffered) data in a file to the current file position. |
| | Position |
| SetPointer | Positions the current file pointer. |
| GetPointer | Set position of file pointer. |
| SetSize | Set the length of the file. |
| GetSize | Get length of the file |
| | Status |
| IsOpen | Get file open state. |
| IsFileEncrypted | Return status of file (true if encrypted) |
| | Operations |
| EncryptFile | Encrypts specified file. |
| DecryptFile | Decrypts specified file. |
| | Operator |
| HANDLE | Get handle to opened file |

| No. | Function names |
|---|---|
| 1 | CryptoFileAccess::CryptoFileAccess( ) |
| 2 | CryptoFileAccess:: CryptoFileAccess(PCSTR pszPassword, CRYPTALGS alg,PCTSTR pszFileName, DWORD dwDesiredAccess, DWORD dwCreationDisposition, DWORD dwFlagsAndAttributes = FILE_ATTRIBUTE_NORMAL, SECURITY_ATTRIBUTES* pSecurityAttributes=0, HANDLE hTemplateFile=0); |
| 3 | Void CryptoFileAccess::Open(PCSTR pszPassword, CRYPTALGS alg, PCTSTR pszFileName, DWORD dwDesiredAccess, DWORDdwCreationDisposition, DWORD dwFlagsAndAttributes=FILE_ATTRIBUTE_NORMAL, SECURITY_ATTRIBUTES *pSecurityAttributes=0,HANDLEhTemplateFile=0); |
| 4 | Void CryptoFileAccess::Close( ) |
| 5 | Bool CryptoFileAccess::Write(const void* p, DWORD dwSize, OVERLAPPED * pOverlapped=0) |

-continued

| | |
|---|---|
| 6 | Bool CryptoFileAccess::Read(void* p, DWORD dwSize, OVERLAPPED* pOverlapped=0) |
| 7 | DWORD CryptoFileAccess::SetPointer(long l DistanceToMove, DWORD dwMoveMethod) |
| 8 | DWORD CryptoFileAccess::GetPointer( ) |
| 9 | Bool CryptoFileAccess::SetSize(DWORD dwNewSize) |
| 10 | bool CryptoFileAccess::IsOpen( ) |
| 11 | static bool CryptoFikleAccess::IsFileEncrypted(PCTSTR pszFileName) |
| 12 | static bool CryptoFileAccess::EncryptFile(PCSTR pszPassword, CRYPTALGS alg, PCTSTR pszSourceFil e, PCTSTR pszDestFile) |
| 13 | static bool CryptoFileAccess::DecryptFile(PCSTR pszPassword, CRYPTALGS alg, PCTSTR pszSourceFil e, PCTSTR pszDestFile) |

I claim:

**1**. A method for securing a computer system that includes one or more mobile devices and one or more a computing node, comprising:

executing a node security program in the computing node for interpreting a node security profile;

determining at least one security parameter from the interpretation of the node security profile; and

managing at least one security process between the computing node and one or more mobile devices based on the at least one security parameter determined by interpreting the node security profile.

**2**. The method of claim 1, wherein the at least one security process comprises a step of securing at least one of a storage area, data, file, program, process and application in at least one of the computing node, the one or more mobile devices and a resource device.

**3**. The method of claim 2, wherein the step of securing comprises at least one of authorizing, denying, preventing, disabling, locking and password protecting at least one of a data synchronization, data transfer, data query, data collection, network access, program execution, data manipulation process initialization, execution and termination.

**4**. The method of claim 1, wherein the node security profiles comprises at least one of a text, .ini and binary, XML format.

**5**. The method of claim 1, wherein the at least one security parameter comprises an attribute relating to at least one of a data, file, security profile, application, process, communication and program.

**6**. The method of claim 1,wherein the attribute is expressed in terms of at least one of a size and type.

**7**. The method of claim 1, wherein the security parameter comprises at least one of a temporal or a position attribute.

**8**. The method of claim 1, wherein the temporal attribute is expressed in terms of at least one of a date, minute, hour, week, month and a year.

**9**. The method of claim 1, wherein the position attribute is expressed in terms of a position determined by at least one of a positioning technique, a zip code, an address, a region, and a location.

**10**. The method of claim 1, wherein the security parameter is expressed in terms of at least one of a serial number, a model number, and a software license number.

**11**. The method of claim 1, wherein the security parameter is expressed in terms of at least one of a mobile device type, a computing node type, a connection type, resource type and a network type.

**12**. The method of claim 1, wherein the network type comprises at least one of a wired and a wireless network type.

**13**. The method of claim 1, wherein the connection type includes at least one of a direct connection and an off-line connection between the computing node and the one or more mobile devices.

**14**. The method of claim 1, wherein the security parameter is expressed in terms of at least one of a physical address, a network resource ID, an IP address, a domain name, a client station ID, a mobile device ID or a server ID.

**15**. The method of claim 1, where the security parameter relates to handling at least one of a guest and unknown device.

**16**. The method of claim 1, wherein the security parameter relates to managing a VPN.

**17**. The method of claim 1 further including transferring a device security profile to a mobile device or a resource device to be interpreted by a device security program running on the mobile device to determine device security parameters.

**18**. The method of claim 17, wherein transferring the device security profile comprises accessing at least one of a server station, a central station, and a computing node or a website.

**19**. The method of claim 17, wherein the device security profile is transferred based on at least one of a temporal attribute and a position of the mobile device in at least one of real time or non-real time modes.

**20**. The method of claim 17 further comprising periodically updating at least one of the node security profile and device security profile.

**21**. The method of claim 17, wherein the step of transferring includes at least one of a data synchronization process, data transfer, file transfer, and an email between the computing node and a mobile device ore resource.

**22**. The method of claim 1, wherein the step of transferring the device security profile requires at least one of a direct link and off-line link with a mobile device.

**23**. The method of claim 1 further comprising at least one of locking and denying access to an unauthorized mobile device attempting to access the system.

**24**. The method of claim 1 further comprising the step of locking an authorized mobile device attempting to access the network.

**25**. The method of claim 24, wherein the locking step comprises transmitting security software to the station.

**26**. The method of claim 17 further including transmitting at least one of the node security profile and device security profile using at least one of a push or pull technology.

**27**. The method of claim 17 further including transmitting at least one of the node security profile and device security profile using an over the air protocol.

**28**. The method of claim 1 further including discovering at least one of one or more mobile devices and one or more resource devices.

**29**. The method of claim 28, wherein the at least one of one or more mobile devices and one or more resource devices are discovered remotely by running a discovery program at a central station.

**30**. The method of claim 28, wherein at least one of one or more mobile devices and one or more resource devices are discovered locally by running a discovery program at the computing node.

**31**. The method of claim 28, wherein the discovering includes detecting at least one of a device type, connection profile, location at least one of one or more mobile devices and one or more resource devices.

**32**. The method of claim 28, wherein the at least one of one or more mobile devices and one or more resource devices are detected based on at least one of a registry resource, a file resource, a process resource, a network management parameter, a data format, a packet format, a synchronization log entry, a directory structure or a database entry.

**33**. A method for managing a computer system including a computing node and one or more mobile devices, comprising:

running a discovery program to detect one or more mobile devices or resources;

determining information regarding one or more mobile devices or resources based on at least one of a registry resource, a file resource, a process resource, a network management parameter, a data format, a packet format, a synchronization log entry, a directory structure, a database entry, the presence of an executable program and attributes associated with a mobile device or resource; and

using the determined mobile device information for managing security of the computer system.

**34**. The method of claim 33 further including scanning the computer system based on a scan profile to detect the one or more mobile devices.

**35**. The method of claim 33, wherein the discovery program is run in at least one of a remote central station or a local computing node.

**36**. The method of claim 33 further including grouping the located mobile devices or resources by type and other attribute.

**37**. The method of claim 33, wherein the scan profile contains information regarding at least one of network, domain, IP address, netmask, and computer identity to be scanned, time of synchronization and device connection.

**38**. The method of claim 33, wherein the scan profile contains information regarding at least one of network, domain, IP address, netmask, and computer identity not to be scanned.

**39**. The method of claim 33, wherein the results of scanning are analyses and populated and stored and displayed to the users.

**40**. The method of claim 33, wherein the gather mobile device information include at least one of device type, device identity, synchronization software type, synchronization software availability, synchronization software location, synchronization software version number, previous synchronization information, data and time of last synchronization, the type of device used during previous synchronization, synchronization ID, device owner information, type of applications and files installed or used on the mobile device, file size, file name, file attribute, manufacturer information, time of all completed and incomplete synchronization and data access and connections performed, type of data and information transferred to and from a mobile device and a resource.

* * * * *