US008208403B2

(12) **United States Patent**
Sarkar et al.

(10) **Patent No.: US 8,208,403 B2**
(45) **Date of Patent: Jun. 26, 2012**

(54) **DEFINING AN END-TO-END PATH FOR A NETWORK SERVICE**

(75) Inventors: **Ashis Sarkar**, Tampa, FL (US); **Dhaval V. Thaker**, Tampa, FL (US); **Ashish Mehta**, Tampa, FL (US)

(73) Assignee: **Verizon Patent and Licensing Inc.**, Basking Ridge, NJ (US)

(*) Notice: Subject to any disclaimer, the term of this patent is extended or adjusted under 35 U.S.C. 154(b) by 305 days.

(21) Appl. No.: **11/964,111**

(22) Filed: **Dec. 26, 2007**

(65) **Prior Publication Data**

US 2009/0168786 A1 Jul. 2, 2009

(51) **Int. Cl.**
H04L 12/28 (2006.01)

(52) **U.S. Cl.** **370/254**; 370/401

(58) **Field of Classification Search** ..... None
See application file for complete search history.

(56) **References Cited**

U.S. PATENT DOCUMENTS

5,065,393 A * 11/1991 Sibbitt et al. 370/360
5,521,910 A * 5/1996 Matthews 370/256
6,549,521 B1 * 4/2003 Edwards et al. 370/255
6,553,002 B1 * 4/2003 Bremer et al. 370/254
6,661,795 B1 * 12/2003 Adas et al. 370/395.1
6,697,325 B1 * 2/2004 Cain 370/255
6,728,205 B1 * 4/2004 Finn et al. 370/217
6,778,535 B1 * 8/2004 Ash et al. 370/395.21
6,791,939 B1 * 9/2004 Steele et al. 370/217
6,963,927 B1 * 11/2005 Lee et al. 370/238
7,145,865 B1 * 12/2006 Meggison et al. 370/397
7,293,106 B2 * 11/2007 Natarajan et al. 370/254
7,362,709 B1 * 4/2008 Hui et al. 370/237
7,440,413 B1 * 10/2008 Tang 370/395.1
7,561,519 B1 * 7/2009 Ash et al. 370/235
7,742,426 B2 * 6/2010 Schumacher et al. 370/248
2001/0028653 A1 * 10/2001 Endo et al. 370/397
2002/0044549 A1 * 4/2002 Johansson et al. 370/255
2002/0120745 A1 * 8/2002 Oishi et al. 370/395.4
2003/0076825 A1 * 4/2003 Guruprasad 370/389
2003/0225906 A1 * 12/2003 Natarajan et al. 709/238
2005/0163057 A1 * 7/2005 Blackburn 370/395.1
2006/0045132 A1 * 3/2006 Metke 370/395.2
2007/0110028 A1 * 5/2007 Wu 370/352
2008/0080517 A1 * 4/2008 Roy et al. 370/395.5

* cited by examiner

Primary Examiner — Chirag Shah
Assistant Examiner — Joshua Smith

(57) **ABSTRACT**

A device receives, from a customer, a request for an end-to-end path through a network, determines parameters of a query based on the request and path criteria, and executes the query on a database of network elements capable of being included in the end-to-end path. The device also selects one or more of the network elements provided in the database based on results of the query, and reserves, in the database, the one or more selected network elements for the end-to-end path.

25 Claims, 10 Drawing Sheets

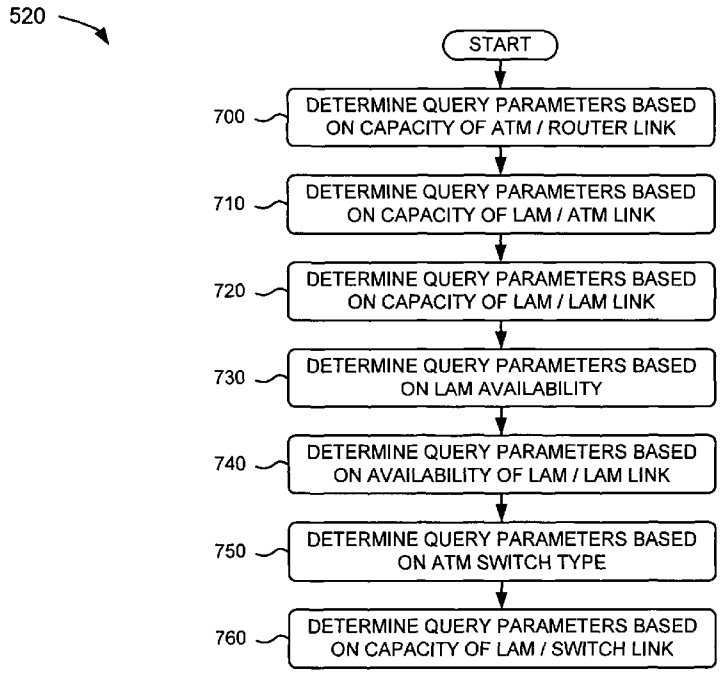

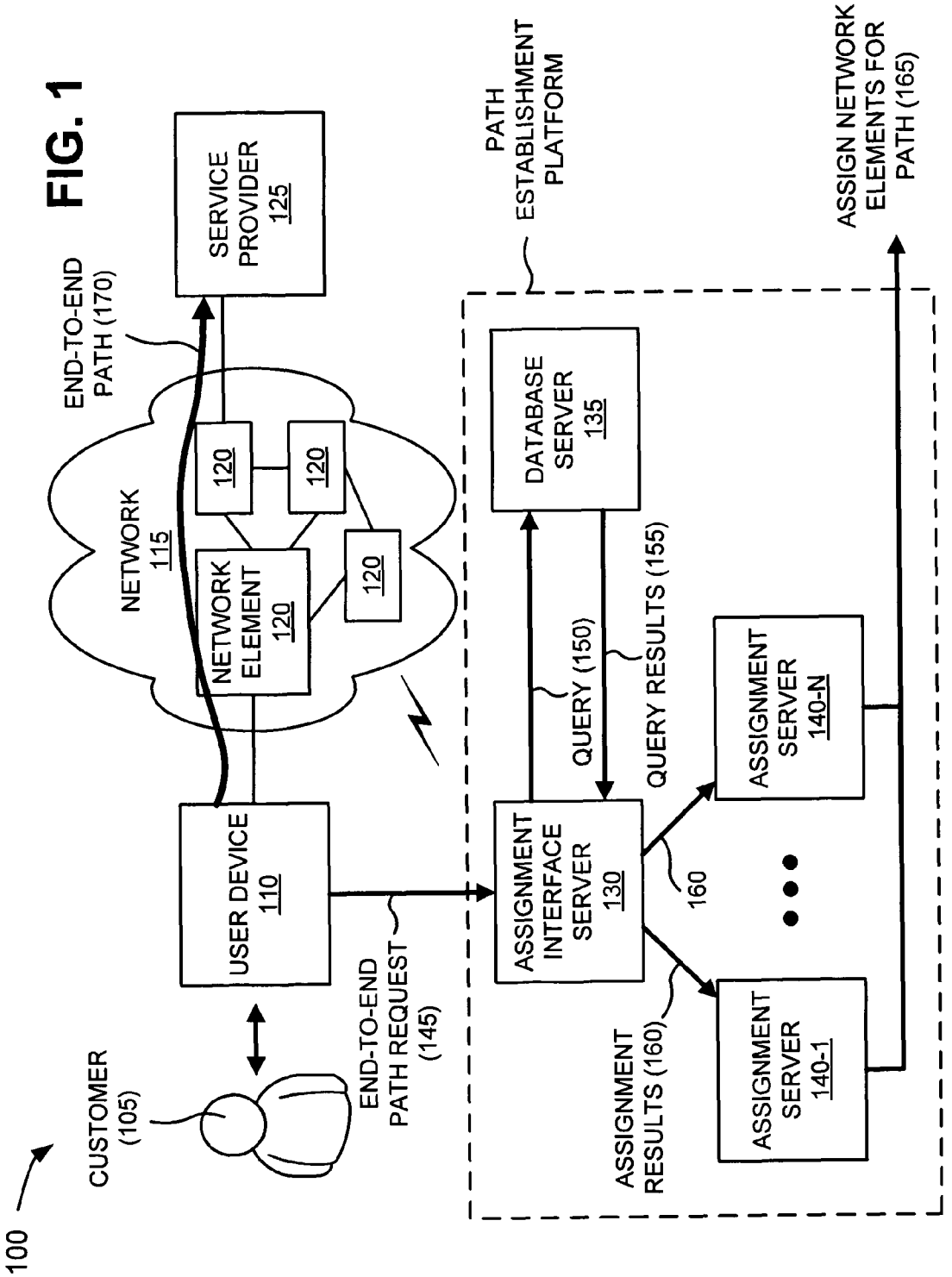
100
CUSTOMER (105)
USER DEVICE 110
END-TO-END PATH REQUEST (145)
NETWORK 115
NETWORK ELEMENT 120
120
120
120
END-TO-END PATH (170)
SERVICE PROVIDER 125
PATH ESTABLISHMENT PLATFORM
ASSIGNMENT INTERFACE SERVER 130
DATABASE SERVER 135
QUERY (150)
QUERY RESULTS (155)
160
ASSIGNMENT RESULTS (160)
ASSIGNMENT SERVER 140-1
ASSIGNMENT SERVER 140-N
ASSIGN NETWORK ELEMENTS FOR PATH (165)

FIG. 1

FIG. 2

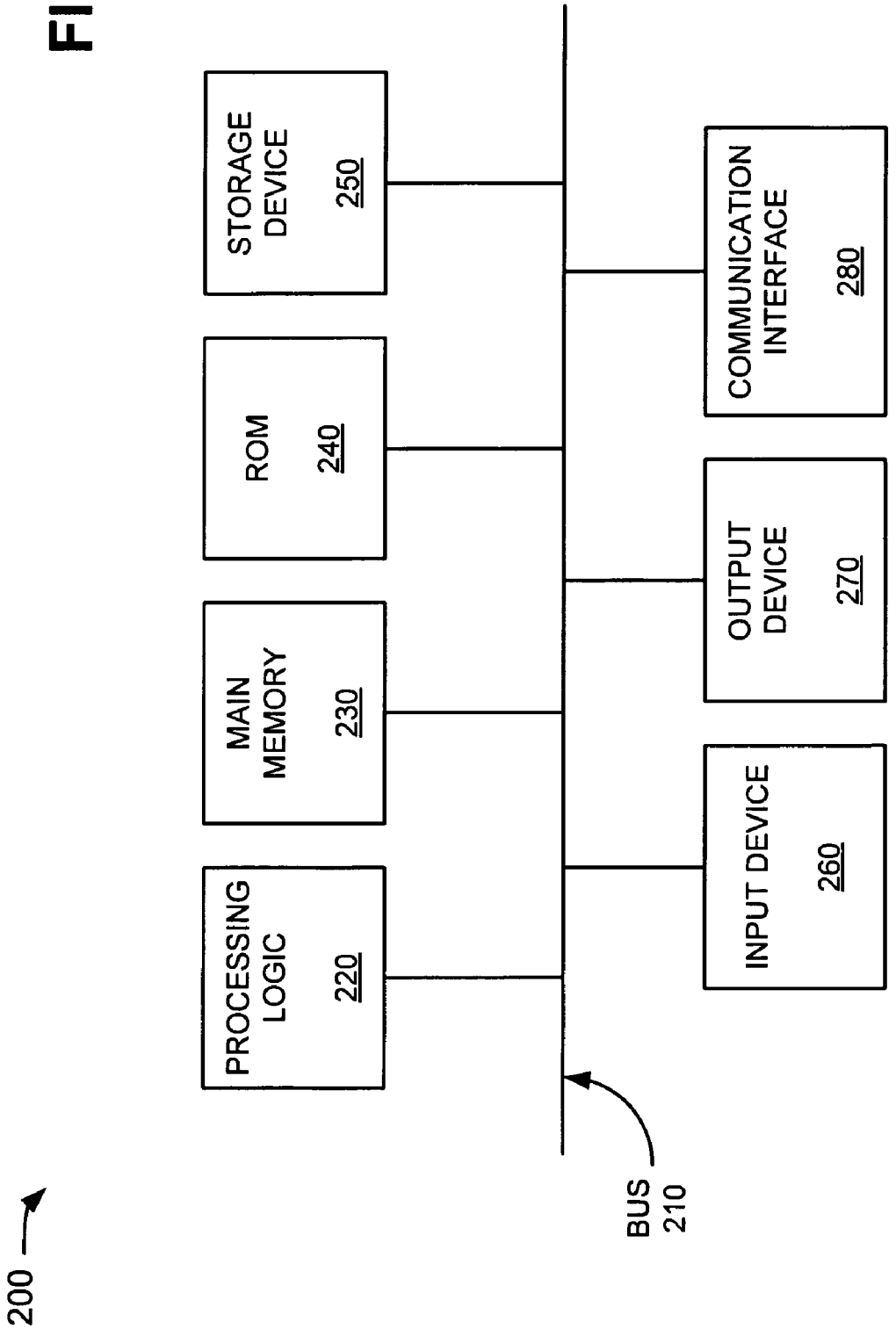
200
PROCESSING LOGIC 220
MAIN MEMORY 230
ROM 240
STORAGE DEVICE 250
INPUT DEVICE 260
OUTPUT DEVICE 270
COMMUNICATION INTERFACE 280
BUS 210

FIG. 3

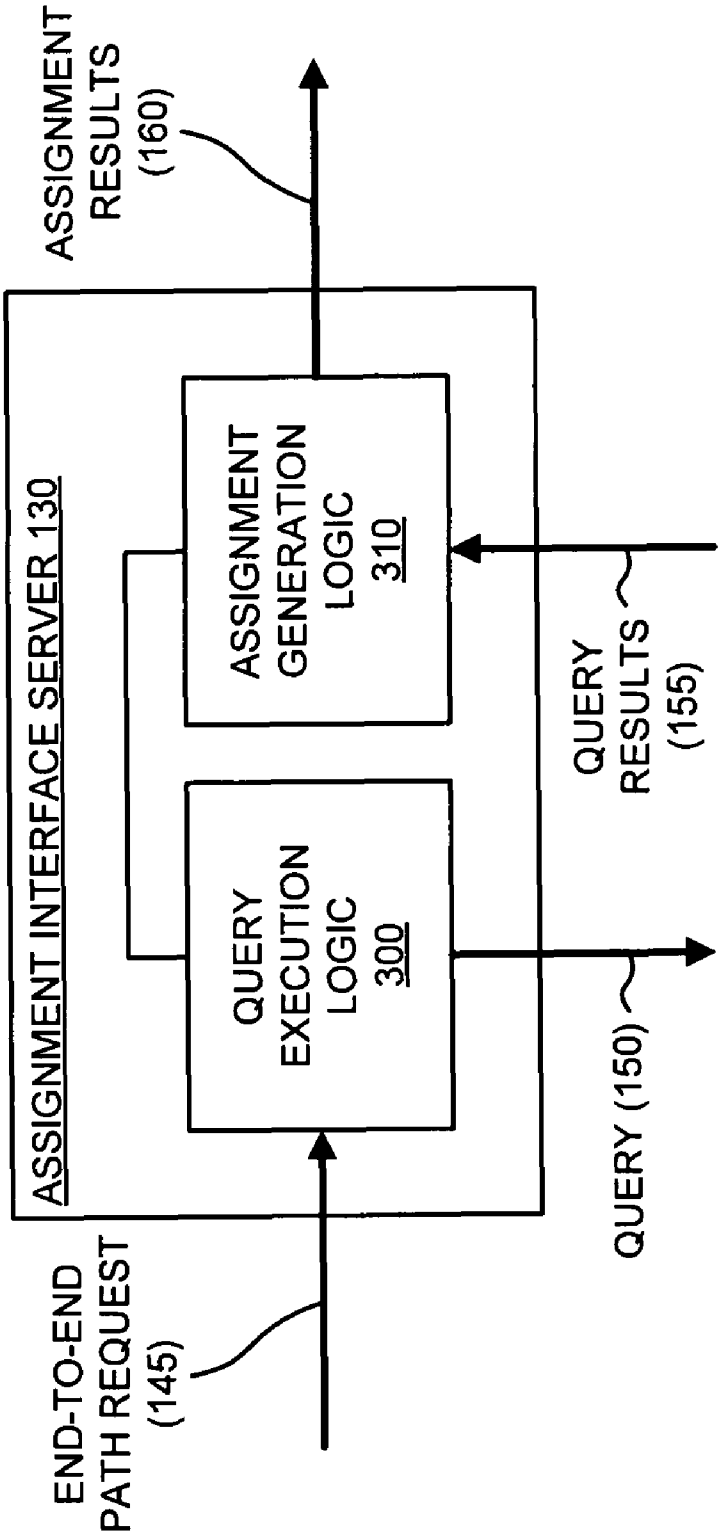
ASSIGNMENT INTERFACE SERVER 130
QUERY EXECUTION LOGIC 300
ASSIGNMENT GENERATION LOGIC 310
END-TO-END PATH REQUEST (145)
QUERY (150)
QUERY RESULTS (155)
ASSIGNMENT RESULTS (160)

FIG. 4

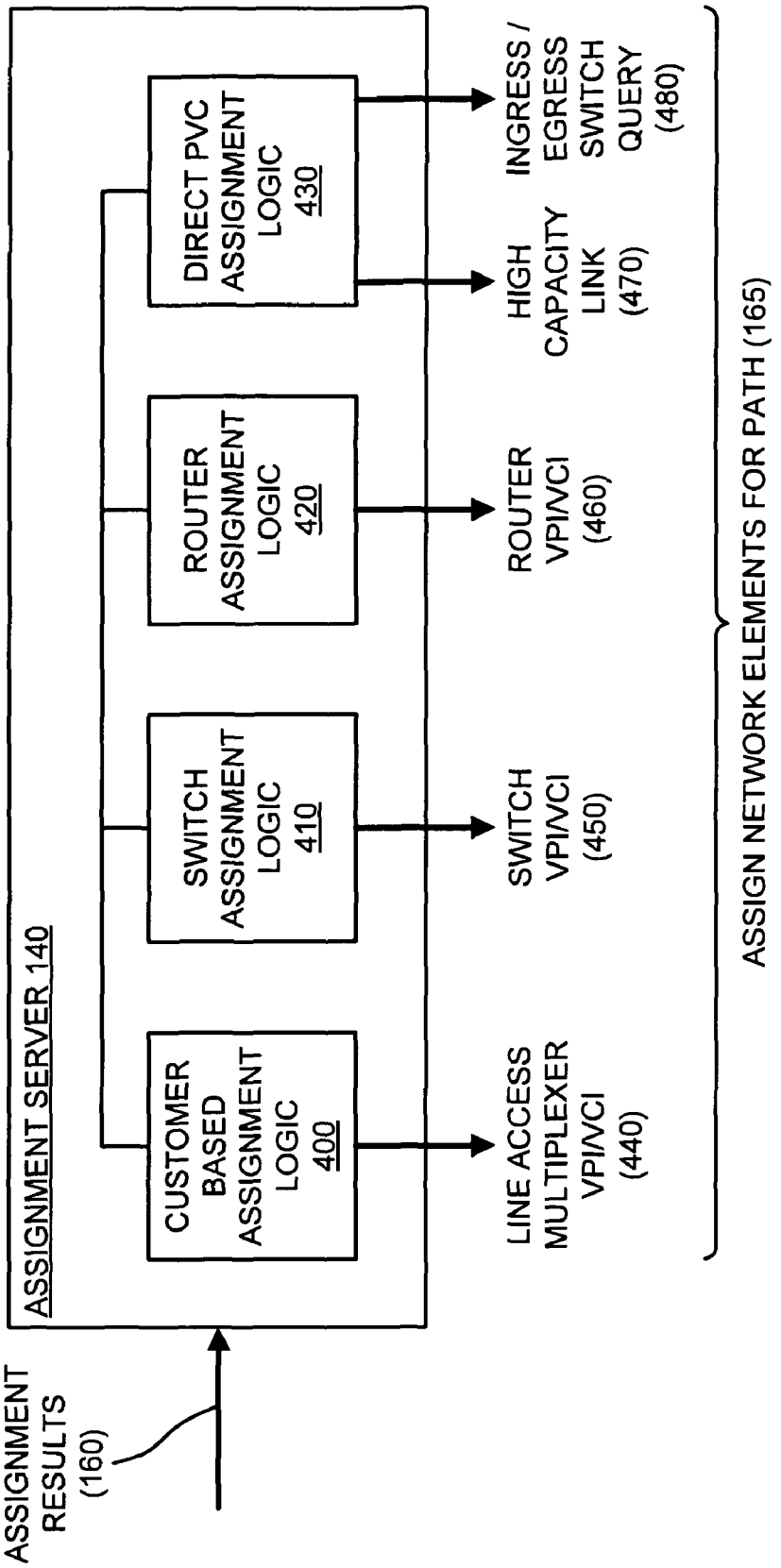
ASSIGNMENT SERVER 140
CUSTOMER BASED ASSIGNMENT LOGIC 400
SWITCH ASSIGNMENT LOGIC 410
ROUTER ASSIGNMENT LOGIC 420
DIRECT PVC ASSIGNMENT LOGIC 430
ASSIGNMENT RESULTS (160)
LINE ACCESS MULTIPLEXER VPI/VCI (440)
SWITCH VPI/VCI (450)
ROUTER VPI/VCI (460)
HIGH CAPACITY LINK (470)
INGRESS / EGRESS SWITCH QUERY (480)
ASSIGN NETWORK ELEMENTS FOR PATH (165)

FIG. 5

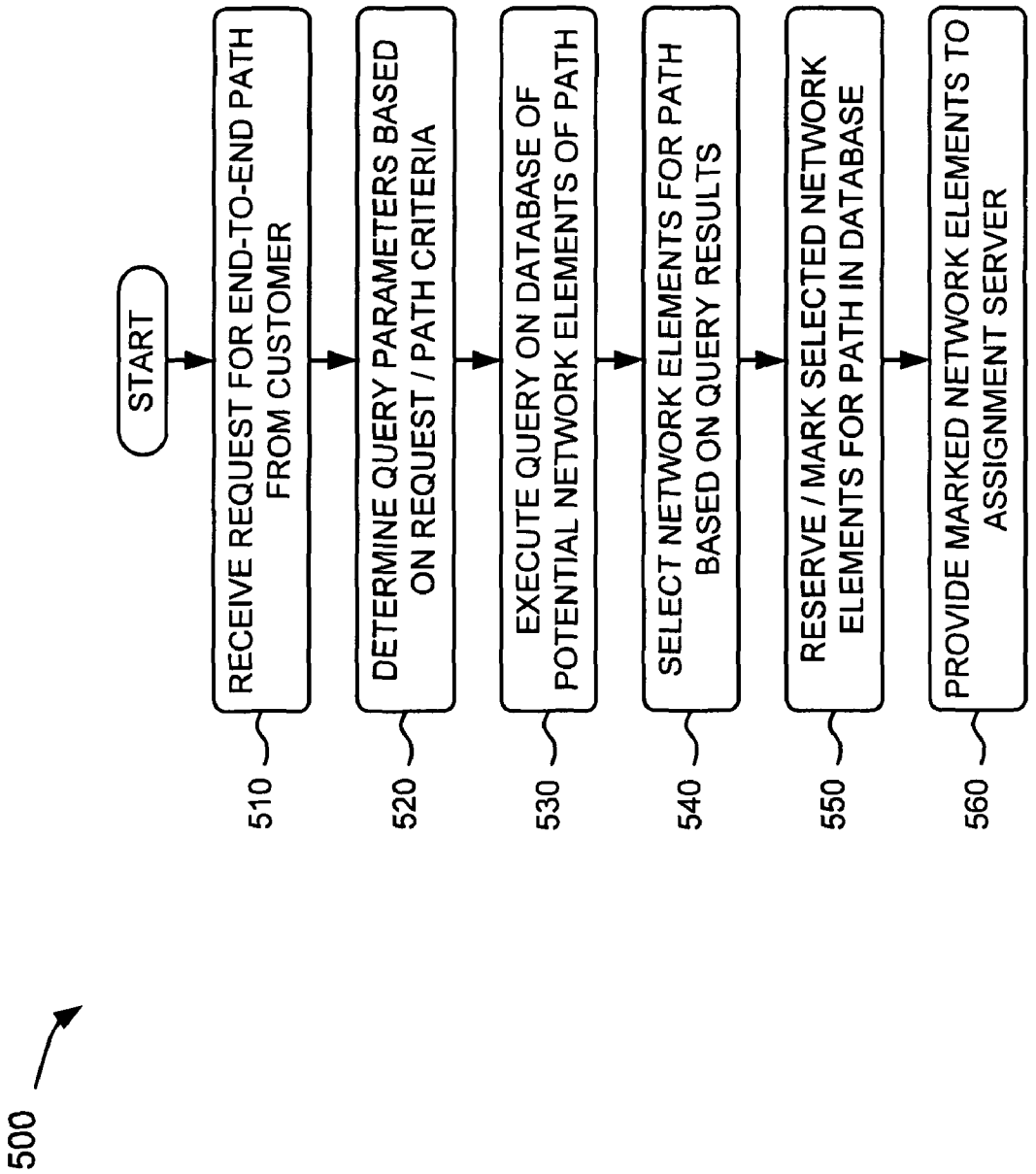
START
RECEIVE REQUEST FOR END-TO-END PATH FROM CUSTOMER
510
DETERMINE QUERY PARAMETERS BASED ON REQUEST / PATH CRITERIA
520
EXECUTE QUERY ON DATABASE OF POTENTIAL NETWORK ELEMENTS OF PATH
530
SELECT NETWORK ELEMENTS FOR PATH BASED ON QUERY RESULTS
540
RESERVE / MARK SELECTED NETWORK ELEMENTS FOR PATH IN DATABASE
550
PROVIDE MARKED NETWORK ELEMENTS TO ASSIGNMENT SERVER
560
500

FIG. 6

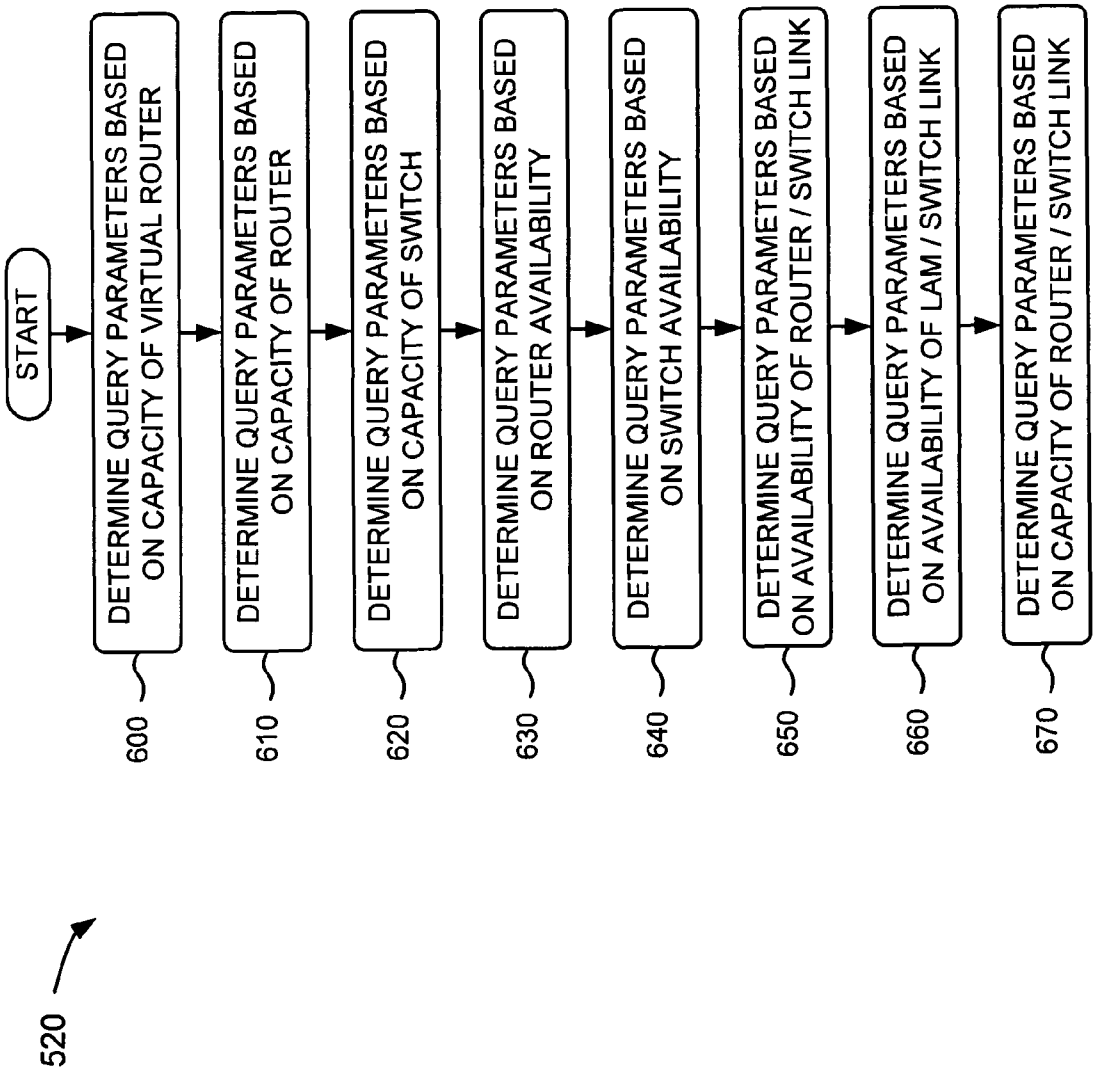
520
START
600
DETERMINE QUERY PARAMETERS BASED ON CAPACITY OF VIRTUAL ROUTER
610
DETERMINE QUERY PARAMETERS BASED ON CAPACITY OF ROUTER
620
DETERMINE QUERY PARAMETERS BASED ON CAPACITY OF SWITCH
630
DETERMINE QUERY PARAMETERS BASED ON ROUTER AVAILABILITY
640
DETERMINE QUERY PARAMETERS BASED ON SWITCH AVAILABILITY
650
DETERMINE QUERY PARAMETERS BASED ON AVAILABILITY OF ROUTER / SWITCH LINK
660
DETERMINE QUERY PARAMETERS BASED ON AVAILABILITY OF LAM / SWITCH LINK
670
DETERMINE QUERY PARAMETERS BASED ON CAPACITY OF ROUTER / SWITCH LINK

FIG. 7

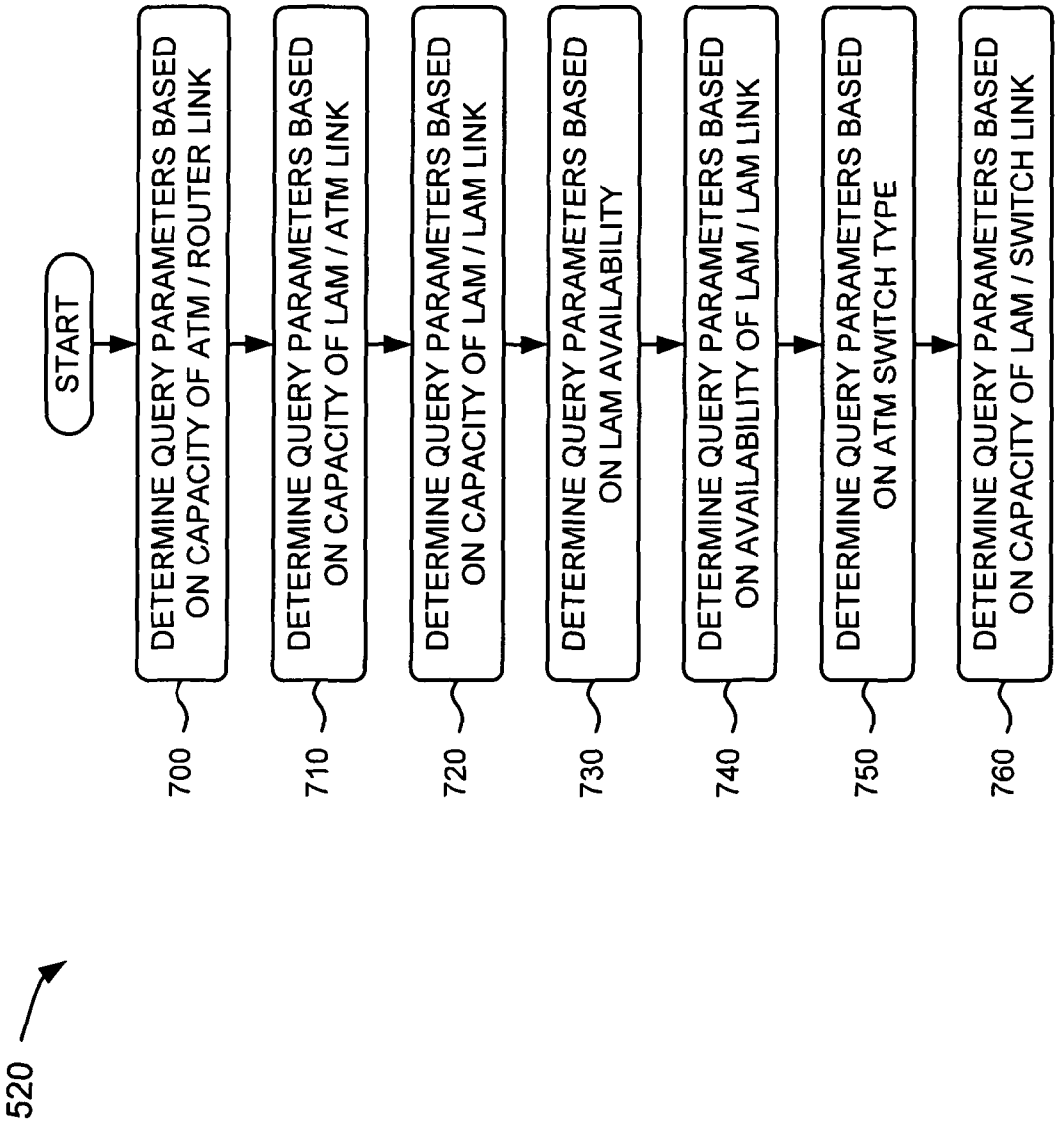
520
START
700
DETERMINE QUERY PARAMETERS BASED ON CAPACITY OF ATM / ROUTER LINK
710
DETERMINE QUERY PARAMETERS BASED ON CAPACITY OF LAM / ATM LINK
720
DETERMINE QUERY PARAMETERS BASED ON CAPACITY OF LAM / LAM LINK
730
DETERMINE QUERY PARAMETERS BASED ON LAM AVAILABILITY
740
DETERMINE QUERY PARAMETERS BASED ON AVAILABILITY OF LAM / LAM LINK
750
DETERMINE QUERY PARAMETERS BASED ON ATM SWITCH TYPE
760
DETERMINE QUERY PARAMETERS BASED ON CAPACITY OF LAM / SWITCH LINK

FIG. 8

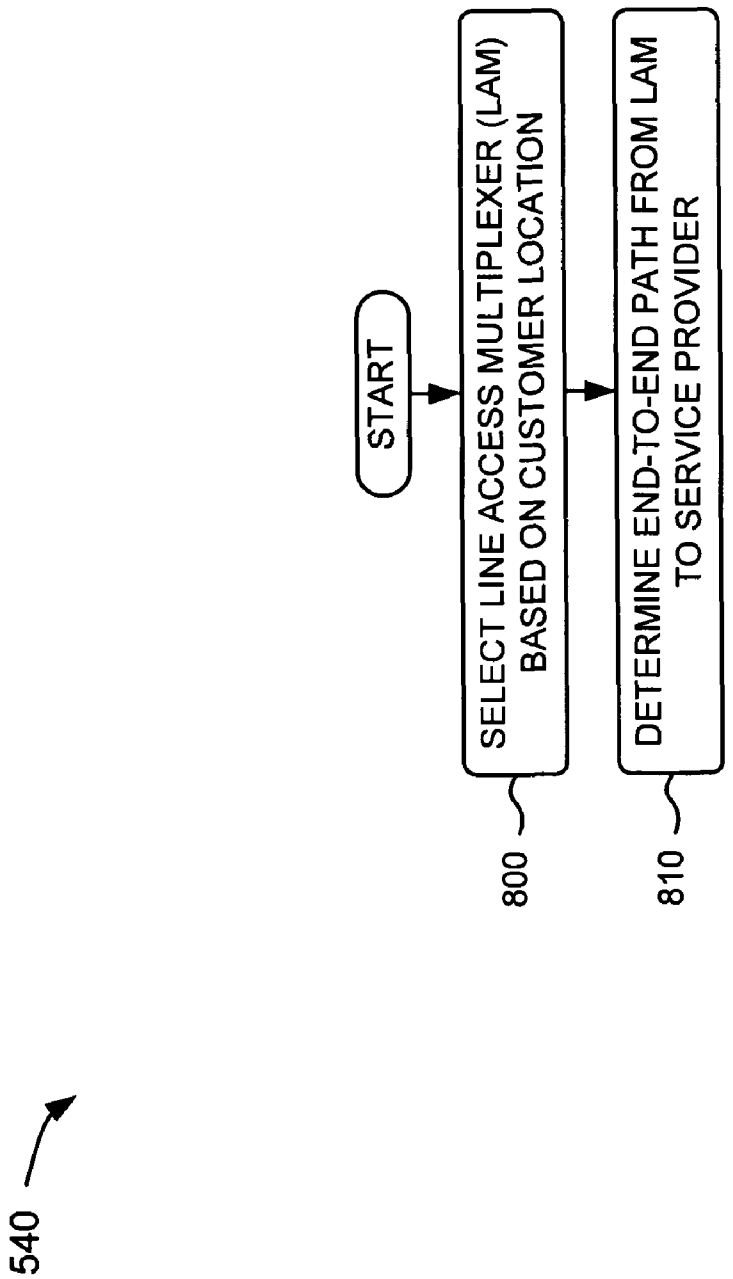
540
START
SELECT LINE ACCESS MULTIPLEXER (LAM) BASED ON CUSTOMER LOCATION
800
DETERMINE END-TO-END PATH FROM LAM TO SERVICE PROVIDER
810

FIG. 9

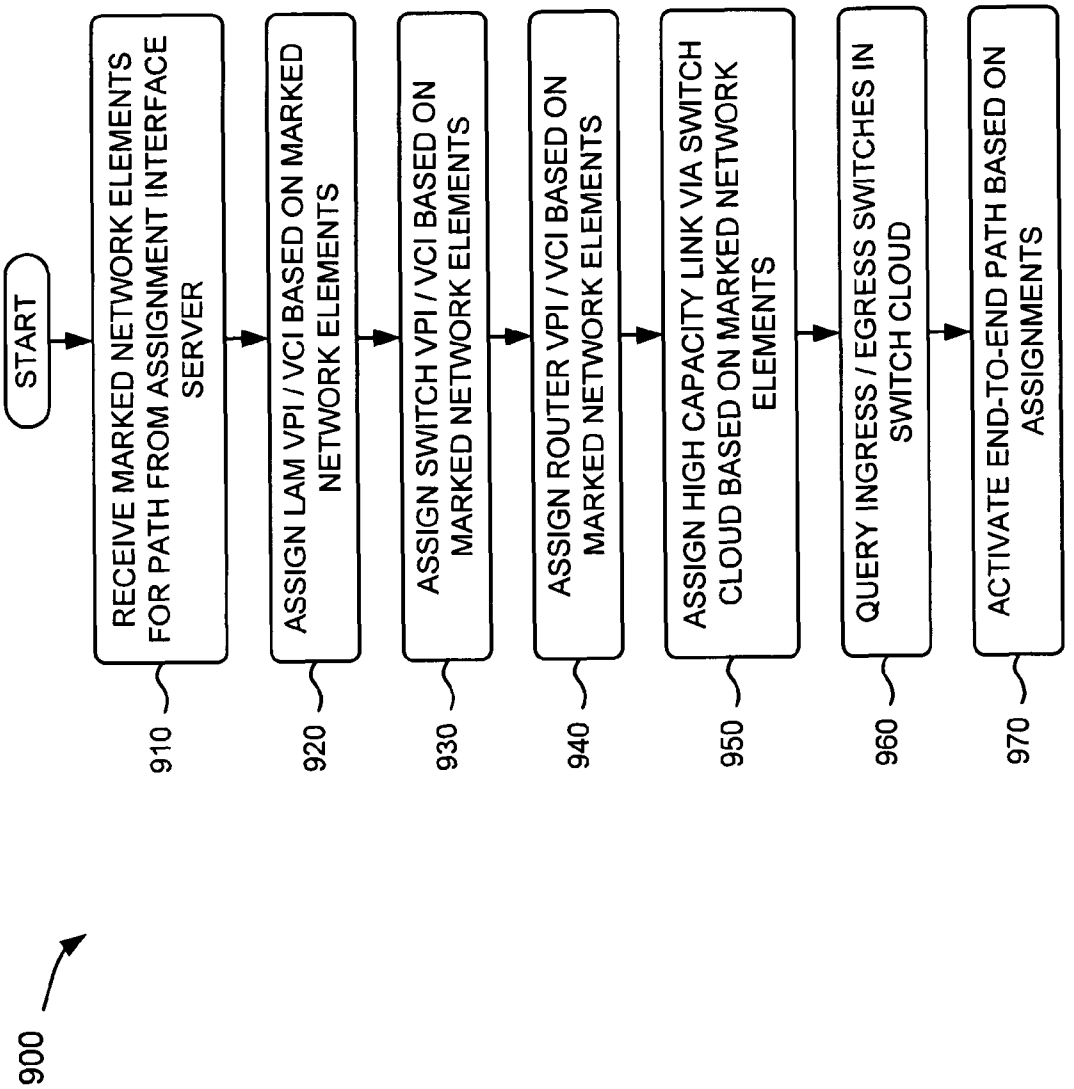
900
START
RECEIVE MARKED NETWORK ELEMENTS FOR PATH FROM ASSIGNMENT INTERFACE SERVER
910
ASSIGN LAM VPI / VCI BASED ON MARKED NETWORK ELEMENTS
920
ASSIGN SWITCH VPI / VCI BASED ON MARKED NETWORK ELEMENTS
930
ASSIGN ROUTER VPI / VCI BASED ON MARKED NETWORK ELEMENTS
940
ASSIGN HIGH CAPACITY LINK VIA SWITCH CLOUD BASED ON MARKED NETWORK ELEMENTS
950
QUERY INGRESS / EGRESS SWITCHES IN SWITCH CLOUD
960
ACTIVATE END-TO-END PATH BASED ON ASSIGNMENTS
970

FIG. 10

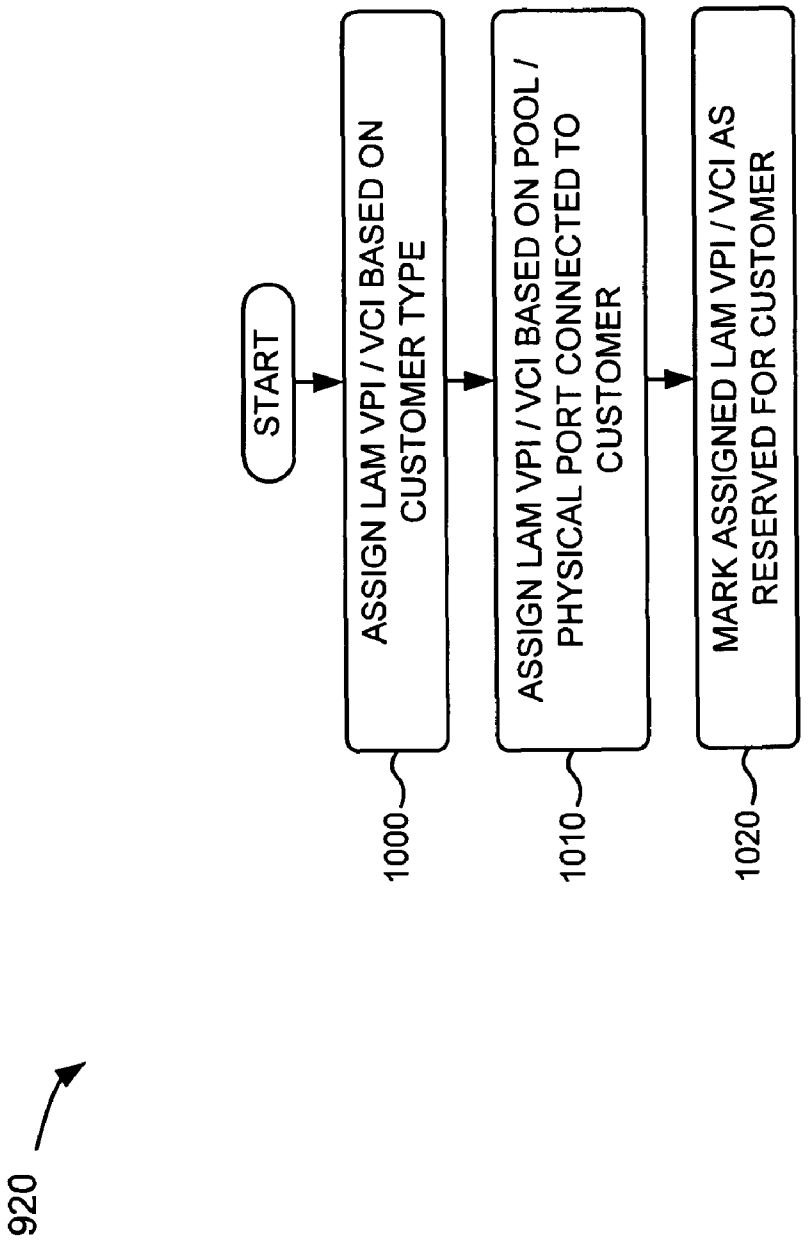
START
ASSIGN LAM VPI / VCI BASED ON CUSTOMER TYPE
1000
ASSIGN LAM VPI / VCI BASED ON POOL / PHYSICAL PORT CONNECTED TO CUSTOMER
1010
MARK ASSIGNED LAM VPI / VCI AS RESERVED FOR CUSTOMER
1020
920

DEFINING AN END-TO-END PATH FOR A NETWORK SERVICE

BACKGROUND

A customer (e.g., individuals) may connect to a network service (e.g., a service provided by an Internet service provider or ISP) via an end-to-end path defined in one or more networks. Similarly, business customers may connect to a network service (e.g., a switch cloud or a high capacity link of an ISP) via an end-to-end path defined in one or more networks. An end-to-end path may include a path of network elements (e.g., switches, routers, etc.) that connects one point (e.g., a customer) to another point (e.g., a network service). When new network service connections are requested, a network provider assigns the end-to-end paths from the customers to the network services. However, as the number of network service requests increases, it becomes increasingly difficult to assign multiple end-to-end paths. For example, serially assigning end-to-end paths to multiple network service requests may require an inordinate amount of time, and/or assigning end-to-end paths to multiple network requests in parallel may result in resource conflicts (e.g., when network elements are assigned, they define a unique path for each customer).

BRIEF DESCRIPTION OF THE DRAWINGS

FIG. **1** is an exemplary diagram of a network in which systems and methods described herein may be implemented;

FIG. **2** illustrates exemplary components of a user device, a service provider, an assignment interface server, an assignment server, and/or a database server of the network depicted in FIG. **1**;

FIG. **3** depicts an exemplary functional block diagram of the assignment interface server of the network illustrated in FIG. **1**;

FIG. **4** illustrates an exemplary functional block diagram of the assignment server of the network illustrated in FIG. **1**; and

FIGS. **5-10** depict flow charts of exemplary processes according to implementations described herein.

DETAILED DESCRIPTION OF PREFERRED EMBODIMENTS

The following detailed description refers to the accompanying drawings. The same reference numbers in different drawings may identify the same or similar elements. Also, the following detailed description does not limit the invention.

Implementations described herein may include systems and/or methods that define an end-to-end path for a large volume of new network service requests without causing resource conflicts. For example, in one implementation, the systems and/or methods may receive a request for an end-to-end path (e.g., a request for a network service) from a customer, and may determine query parameters based on the request and/or various path criteria (e.g., status, availability, etc. of network elements, links between network elements, etc.). The query may be executed on a database of potential network elements that may form the end-to-end path, and network elements for the end-to-end path may be selected based on the query results. The selected network elements may be reserved (or marked as "in use") in the database, and the reserved or marked network elements may be output for activation of the end-to-end path.

A "network service," as the term is used herein, is to be broadly interpreted to include any act or variety of work done

for others (e.g., for compensation). For example, in one implementation, a network service may include telecommunications services, such as telephone services, Internet services, network data services, radio services, television services, video services, etc.

FIG. **1** is an exemplary diagram of a network **100** in which systems and methods described herein may be implemented. As illustrated, network **100** may include a customer **105**, a user device **110**, a network **115** with network elements **120**, a service provider **125**, an assignment interface server **130**, a database server **135**, and assignment servers **140-1**, . . . **140-N** (e.g., collectively referred to as "assignment servers **140**" or singularly as "assignment server **140**"). User device **110**, service provider **125**, assignment interface server **130**, database server **135**, and/or assignment servers **140** may connect to network **115** via wired and/or wireless connections. A single customer, a single user device, a single network, four network elements, a single service provider, a single assignment interface server, a single database server, and two assignment servers have been illustrated in FIG. **1** for simplicity. In practice, there may be more or different customers, user devices, networks, network elements, service providers, assignment interface servers, database servers, and/or assignment servers. Also, in some instances, one or more of user device **110**, network **115**, network elements **120**, service provider **125**, assignment interface server **130**, database server **135**, and/or assignment servers **140** may perform one or more functions described as being performed by another one or more of user device **110**, network **115**, network elements **120**, service provider **125**, assignment interface server **130**, database server **135**, and/or assignment servers **140**.

Customer **105** may include any person or business entity (e.g., a company) capable of purchasing one or more network services offered by service provider **125**. In one implementation, for example, customer **105** may include a purchaser or a potential purchaser of telecommunications services provided by service provider **125**, an existing customer or a potential customer of telecommunications services, etc.

User device **110** may include a radiotelephone, a PCS terminal (e.g., that may combine a cellular radiotelephone with data processing and data communications capabilities), a personal digital assistant (PDA) (e.g., that can include a radiotelephone, a pager, Internet/intranet access, etc.), a laptop, a personal computer, or other types of computation or communication devices, threads or processes running on these devices, and/or objects executable by these devices. In one implementation, user device **110** may include any device that is capable of requesting an end-to-end path (e.g., through network **115**) from user device **110** to service provider **125**. In another implementation, user device **110** may include any device that enables a customer (e.g., a network service customer) to access the network services provided by service provider **125**.

Network **115** may include a local area network (LAN), a wide area network (WAN), a metropolitan area network (MAN), an intranet, the Internet, a Public Land Mobile Network (PLMN), a telephone network, such as the Public Switched Telephone Network (PSTN) or a cellular telephone network, or a combination of networks.

Each of network elements **120** may include a data transfer device, such as a gateway, a router, a switch (e.g., an asynchronous transfer mode (ATM) switch), a firewall, a network interface card (NIC), a hub, a bridge, a proxy server, an optical add-drop multiplexer (OADM), a line access multiplexer (LAM), a permanent or private virtual circuit (PVC), links provided between any of the aforementioned devices, or some other type of device that processes and/or transfers data.

In one example, one or more network elements **120** may be capable of establishing an end-to-end path between user device **110** and service provider **125**.

Service provider **125** may include one or more server entities, or other types of computation or communication devices, that gather, process, search, and/or provide information in a manner described herein. In one implementation, service provider **125** may be capable of providing a network service (e.g., a telephone service, an Internet service, network content services, such as services providing a file, a web page, an email, an instant message, etc.) to one or more customers (e.g., customer **105**).

Assignment interface server **130** may include one or more server entities, or other types of computation or communication devices, that gather, process, search, and/or provide information in a manner described herein. In one implementation, assignment interface server **130** may define an end-to-end path between user device **110** and service provider **125**, via network **115**, and may provide the defined end-to-end path to one or more assignment servers **140** for activation of the defined end-to-end path. Further details of assignment interface server **130** are provided below in connection with FIG. **3**.

Database server **135** may include one or more server entities, or other types of computation or communication devices, that gather, process, search, and/or provide information in a manner described herein. In one implementation, database server **135** may include one or more devices that may receive and/or store information (e.g., in one or more databases) associated with network **115** and/or network elements **120** that may be used to define an end-to-end path. For example, database server **135** may store information (e.g., in one or more databases), such as capacity information associated with network elements **120** and/or links between network elements **120**, availability status information associated with network elements **120** and/or links between network elements **120**, bandwidth information associated with network elements **120** and/or links between network elements **120**, etc. Assignment interface server **130** may use such information to determine an end-to-end path between user device and service provider **125**, via network **115**. Although database server **135** is shown as being separate from assignment interface server **130**, in one implementation, database server **135** may be incorporated within assignment interface server **130**.

Each of assignment servers **140** may include one or more server entities, or other types of computation or communication devices, that gather, process, search, and/or provide information in a manner described herein. In one implementation, each of assignment servers **140** may receive the defined end-to-end path from assignment interface server **130**, may assign the end-to-end path to one or more network elements **120**, and may activate the assigned one or more network elements **120** for the end-to-end path. Further details of assignment servers **140** are provided below in connection with FIG. **4**.

As further shown in FIG. **1**, customer **105**, via user device **110**, may provide an end-to-end path request **145** (e.g., requesting connection to service provider **125**, requesting a network service provided by service provider **125**, etc.) to assignment interface server **130**. Assignment interface server **130** may receive end-to-end path request **145**, and may determine parameters of a query **150** (e.g., a structured query language (SQL) query) based on request **145** and/or various path criteria (e.g., status, availability, capacity, etc. of network elements **120**, links between network elements **120**, etc.). Assignment interface server **130** may provide query **150** to database server **135** for execution on a database of potential network elements **120** that may form the end-to-end path, and may select or define one or more network elements **120** for the end-to-end path based on query results **155** from database server **135**. Assignment interface server **130** may reserve (or mark as "in use") the selected one or more network elements **120** in the database (e.g., to avoid resource conflicts), and the reserved or marked network elements **120** may be output as assignment results **160** to assignment servers **140**. One or more assignment servers **140** may receive assignment results **160**, and may perform an assignment of network elements **120** for the path, as indicated by reference number **165**. Multiple assignment servers **140** may permit handling of large volumes of new network service requests. An end-to-end path **170** may be activated in network **115** (e.g., based on network element assignment **165**), and may connect user device **110** to service provider **125**.

FIG. **2** is an exemplary diagram of a device **200** that may correspond to user device **110**, a network element **120**, service provider **125**, assignment interface server **130**, database server **135**, and/or an assignment server **140**. As illustrated, device **200** may include a bus **210**, processing logic **220**, a main memory **230**, a read-only memory (ROM) **240**, a storage device **250**, an input device **260**, an output device **270**, and/or a communication interface **280**. Bus **210** may include a path that permits communication among the components of device **200**.

Processing logic **220** may include a processor, microprocessor, or other type of processing logic that may interpret and execute instructions. Main memory **230** may include a random access memory (RAM) or another type of dynamic storage device that may store information and instructions for execution by processing logic **220**. ROM **240** may include a ROM device or another type of static storage device that may store static information and/or instructions for use by processing logic **220**. Storage device **250** may include a magnetic and/or optical recording medium and its corresponding drive.

Input device **260** may include a mechanism that permits an operator to input information to device **200**, such as a keyboard, a mouse, a pen, a microphone, voice recognition and/or biometric mechanisms, etc. Output device **270** may include a mechanism that outputs information to the operator, including a display, a printer, a speaker, etc. Communication interface **280** may include any transceiver-like mechanism that enables device **200** to communicate with other devices and/or systems. For example, communication interface **280** may include mechanisms for communicating with another device or system via a network, such as network **170**.

As described herein, device **200** may perform certain operations in response to processing logic **220** executing software instructions contained in a computer-readable medium, such as main memory **230**. A computer-readable medium may be defined as a physical or logical memory device. The software instructions may be read into main memory **230** from another computer-readable medium, such as storage device **250**, or from another device via communication interface **280**. The software instructions contained in main memory **230** may cause processing logic **220** to perform processes described herein. Alternatively, hardwired circuitry may be used in place of or in combination with software instructions to implement processes described herein. Thus, implementations described herein are not limited to any specific combination of hardware circuitry and software.

Although FIG. **2** shows exemplary components of device **200**, in other implementations, device **200** may contain fewer, different, or additional components than depicted in FIG. **2**. In still other implementations, one or more components of

device **200** may perform one or more other tasks described as being performed by one or more other components of device **200**.

FIG. **3** depicts an exemplary functional block diagram of assignment interface server **130**. As illustrated, assignment interface server **130** may include query execution logic **300** and assignment generation logic **310**. The functions described in FIG. **3** may be performed by one or more of the exemplary components of device **200** depicted in FIG. **2**.

Query execution logic **300** may include any hardware and/or software based logic (e.g., processing logic **220**) that enables assignment interface server **130** to generate a query (e.g., query **150**) for defining an end-to-end path within one or more networks (e.g., network **115**) that connects a customer (e.g., customer **105**) to a network service (e.g., service provider **125**). In one example, query execution logic **300** may receive end-to-end path request **145**, may determine parameters of query **150** based on request **145** and/or various path criteria, and may provide query **150** to database server **135** for execution on a database of potential network elements **120** that may form the end-to-end path. End-to-end path request **145** may include network service information (e.g., the requested network service), customer information (e.g., customer name, location with respect to network **115**, a LAM associated with the customer, etc.), etc.

The various path criteria may include one or more of the following exemplary path criteria: a number of subscribers on a virtual router (e.g., in network **115**) is less than a capacity of the virtual router; a number of subscribers on a router (e.g., in network **115**) is less than a capacity of the router; a number of subscribers on a switch (e.g., in network **115**) is less than a capacity of the switch; a link between an ATM switch and a router (e.g., in network **115**) has a PVC count of less than a maximum allowed; a link between a LAM and an ATM switch (e.g., in network **115**) has a PVC count of less than a maximum allowed; a link between a LAM and another LAM (e.g., in network **115**) has a PVC count of less than a maximum allowed; a LAM is available; a switch is available; a router is available; a link connecting a LAM to a switch is available with a non-zero scaling factor (e.g., a function of space-time); a link connecting a switch to a router is available with a non-zero scaling factor; a link connecting a LAM to another LAM is available with a non-zero scaling factor; an ATM switch is an Application Delivery Network (ADN) type; a used bandwidth on a link connecting a LAM to a switch is less than a maximum allowed bandwidth; and/or a used bandwidth on a link connecting a switch to a router is less than a maximum allowed bandwidth.

In one example, assignment interface server **130** (e.g., via query **150**) may identify a potential best possible end-to-end path, and may identify a LAM for a location associated with customer **105**. Assignment interface server **130** (e.g., via query **150**) may determine if an end-to-end path exists for the LAM associated with customer **105** to service provider **125**. If a path exists, assignment interface server **130** (e.g., via query **150**) may identify one or more switches (e.g., ATM switches) and/or routers connected to the LAM in order to identify the end-to-end path from customer **105** to service provider **125**. Assignment interface server **130** (e.g., via query **150**) may mark (e.g., as "in use" or with some other designation) the selected LAM, switches, and/or routers to prevent resource conflicts (e.g., assigning the same end-to-end path (and/or network elements **120**) to more than one customer). Assignment interface server **130** may store the defined end-to-end path (e.g., locally or within another device, such as database server **135**).

Assignment generation logic **310** may include any hardware and/or software based logic (e.g., processing logic **220**) that enables assignment interface server **130** to receive query results **155** (e.g., from database server **135**), and to generate assignment results **160** based on query results **155**. In one implementation, query results **155** may identify an end-to-end path associated with customer **105**, network **115**, network elements **120**, and/or service provider **125**. Assignment generation logic **310** may select network elements **120** for the end-to-end path based on query results **155**, and may generate assignment results **160** based on the identified end-to-end path. Assignment results **160** may include an identification of network elements **120** (such as, e.g., marked or reserved network elements **120**) that define the end-to-end path. Assignment generation logic **310** may provide assignment results **160** to one or more assignment servers **140**. For example, assignment generation logic **310** may provide assignment results **160** to a next available assignment server **140**.

In one exemplary implementation, assignment interface server **130** may place an end-to-end path request on hold if the same network element(s) **120** are defined for another end-to-end path request. This may prevent resource conflicts (i.e., assigning the same network element(s) **120** that define an end-to-end path) for two different requests.

Although FIG. **3** shows exemplary functional components of assignment interface server **130**, in other implementations, assignment interface server **130** may contain fewer, different, or additional functional components than depicted in FIG. **3**. In still other implementations, one or more functional components of assignment interface server **130** may perform one or more other tasks described as being performed by one or more other functional components of assignment interface server **130**.

FIG. **4** illustrates an exemplary functional block diagram of assignment server **140**. As illustrated, assignment server **140** may include customer based assignment logic **400**, switch assignment logic **410**, router assignment logic **420**, and direct PVC assignment logic **430**. The functions described in FIG. **4** may be performed by one or more of the exemplary components of device **200** depicted in FIG. **2**.

Customer based assignment logic **400** may include any hardware and/or software based logic (e.g., processing logic **220**) that enables assignment server **140** to assign a line access multiplexer (LAM) associated with a customer (e.g., customer **105**). In one implementation, customer based assignment logic **400** may receive assignment results **160** (e.g., marked or reserved network elements **120**), and may assign a LAM virtual path identifier (VPI) and/or virtual channel identifier (VCI) **440** for the end-to-end path defined by assignment results **160**. A "VPI" may include an eight-bit field in a cell header that identifies a virtual path (e.g., a bundle of virtual channels that have a same endpoint) to which the cell belongs as it travels through a network. A "virtual channel" may include a logical connection between two end devices on a network. A "VCI" may include a sixteen-bit field in a cell header that identifies a next destination of the cell as it travels through a network. LAM VPI/VCI **440** may include a VPI and/or a VCI of a LAM (e.g., network element **120**) assigned to a customer. In one example, customer based assignment logic **400** may assign LAM VPI/VCI **440** based on a customer type (e.g., a residential customer, a business customer, etc.), based on a pool or group of LAM VPI/VCIs, based on a physical port connected to the customer (e.g., a port of user device **110** associated with customer **105**),

etc. In another example, customer based assignment logic **400** may mark the assigned LAM VPI/VCI **440** as "in use" for a particular customer.

Switch assignment logic **410** may include any hardware and/or software based logic (e.g., processing logic **220**) that enables assignment server **140** to assign one or more switches to a customer (e.g., customer **105**). In one implementation, switch assignment logic **410** may receive assignment results **160** (e.g., that indicate one or more network elements **120**), and may assign a switch VPI/VCI **450** for the end-to-end path defined by assignment results **160**. Switch VPI/VCI **450** may include a VPI and/or a VCI of a switch (e.g., network element **120**) assigned to the customer. In one example, switch assignment logic **410** may assign switch VPI/VCI **450** based on a type (e.g., model type, brand type, etc.) of the assigned switch.

Router assignment logic **420** may include any hardware and/or software based logic (e.g., processing logic **220**) that enables assignment server **140** to assign one or more routers to a customer (e.g., customer **105**). In one implementation, router assignment logic **420** may receive assignment results **160** (e.g., that indicate one or more network elements **120**), and may assign a router VPI/VCI **460** for the end-to-end path defined by assignment results **160**. Router VPI/VCI **460** may include a VPI and/or a VCI of a router (e.g., network element **120**) assigned to the customer. In one example, router assignment logic **420** may assign router VPI/VCI **460** based on a type (e.g., model type, brand type, etc.) of the assigned router.

Direct PVC assignment logic **430** may include any hardware and/or software based logic (e.g., processing logic **220**) that enables assignment server **140** to assign one or more high capacity links (e.g., via a switch cloud) to a business customer (e.g., customer **105**). Rather than assigning from the assigned router to service provider **125** (e.g., as with a residential customer), direct PVC assignment logic **430** may assign the assigned switch to a high capacity link via a switch cloud. The switch cloud may provide a high capacity link rather than a lower capacity link (e.g., provided between routers of a residential arrangement). In one implementation, direct PVC assignment logic **430** may receive assignment results **160** (e.g., that indicate one or more network elements **120**), and may assign a high capacity link **470** (e.g., via a switch cloud) for the end-to-end path defined by assignment results **160**. Direct PVC assignment logic **430** may query ingress and/or egress switches in the switch cloud defined by assignment results **160**, as indicated by reference number **480**, to determine their availability.

As further shown in FIG. **4**, LAM VPI/VCI **440**, switch VPI/VCI **450**, router VPI/VCI **460**, high capacity link **470**, and/or ingress/egress switch query **480** may be collectively referred to as "assign network elements for path" **165**. Assignment server **140** may use assign network elements for path **165** to activate an end-to-end path (e.g., end-to-end path **170**) in a network (e.g., network **115**), which may connect user device **110** to service provider **125**. Since multiple assignment servers **140** may assign end-to-end paths simultaneously, assignment interface server **130** may ensure that the same network element(s) **120** are not assigned to more than one end-to-end path request at the same time. Thus, each assignment server **140** may activate unique end-to-end paths in parallel, which may prevent resource conflicts as well as reduce the time to assign the end-to-end paths for a large volume of customers.

Although FIG. **4** shows exemplary functional components of assignment server **140**, in other implementations, assignment server **140** may contain fewer, different, or additional functional components than depicted in FIG. **4**. In still other implementations, one or more functional components of assignment server **140** may perform one or more other tasks described as being performed by one or more other functional components of assignment server **140**.

FIGS. **5-8** depict a flow chart of an exemplary process **500** for defining an end-to-end path for a large volume of new network service requests without causing resource conflicts, according to implementations described herein. In one implementation, process **500** may be performed by assignment interface server **130**. In another implementation, some or all of process **500** may be performed by another device or group of devices, including or excluding assignment interface server **130**.

As illustrated in FIG. **5**, process **500** may begin with receipt of a request for an end-to-end path from a customer (block **510**), and a determination of query parameters based on the request and path criteria (block **520**). For example, in implementations described above in connection with FIG. **3**, query execution logic **300** of assignment interface server **130** may receive end-to-end path request **145**, and may determine parameters of query **150** based on request **145** and/or various path criteria. End-to-end path request **145** may include network service information (e.g., the requested network service), customer information (e.g., customer name, location with respect to network **115**, a LAM associated with the customer, etc.), etc. In one example, customer **105** may access assignment server **130** (e.g., via user device **110** and/or by logging in), and may provide the necessary information (e.g., end-to-end path request **145**) to assignment server **130**. Alternatively, customer **105** may simply request a network service from network **115**, and assignment server **130** may automatically determine the end-to-end path based on the request.

As further shown in FIG. **5**, a query may be executed on a database of potential network elements that may be included in the path (block **530**), and one or more network elements for the path may be selected based on results of the query (block **540**). For example, in implementations described above in connection with FIG. **3**, query execution logic **300** may provide query **150** to database server **135** for execution on a database of potential network elements **120** that may form the end-to-end path. Assignment generation logic **310** of assignment interface server **130** may receive query results **155** (e.g., from database server **135**). In one example, query results **155** may identify an end-to-end path associated with customer **105**, network **115**, network elements **120**, and/or service provider **125**, and assignment generation logic **310** may select network elements **120** for the end-to-end path based on query results **155**.

Returning to FIG. **5**, the selected one or more network elements may be reserved or marked for the path in the database (block **550**), and the marked one or more network elements may be provided to an assignment server (block **560**). For example, in implementations described above in connection with FIG. **3**, assignment interface server **130** (e.g., via query **150**) may mark (e.g., as "in use" or with some other designation) the selected LAM, switches, and/or routers to prevent resource conflicts (e.g., assigning the same end-to-end path (and/or network elements **120**) to more than one customer). Assignment generation logic **310** may generate assignment results **160** based on query results **155**. Assignment results **160** may include an identification of network elements **120** (e.g., marked or reserved network elements **120**) that define the end-to-end path. Assignment generation logic **310** may provide assignment results **160** to one or more assignment servers **140**. In one example, assignment servers **140** may define the end-to-end path (e.g., end-to-end path

170) for customer **105**, and customer **105** may use the end-to-end path to access a network service (e.g., provided by service provider **125**).

Process block **520** may include the process blocks illustrated in FIG. **6**. As shown in FIG. **6**, process block **520** may include one or more of determining the query parameters based on a capacity of a virtual router (block **600**), a capacity of a router (block **610**), a capacity of a switch (block **620**), an availability of a router (block **630**), an availability of a switch (block **640**), an availability of a link connecting a router and a switch (block **650**), an availability of a link connecting a LAM and a switch (block **660**), and/or a capacity of a link connecting a router and a switch (block **670**). For example, in implementations described above in connection with FIG. **3**, query execution logic **300** may receive end-to-end path request **145**, and may determine parameters of query **150** based on request **145** and/or various path criteria. The various path criteria may include one or more of the following exemplary path criteria: a number of subscribers on a virtual router is less than a capacity of the virtual router; a number of subscribers on a router is less than a capacity of the router; a number of subscribers on a switch is less than a capacity of the switch; a switch is available; a router is available; a link connecting a LAM to a switch is available with a non-zero scaling factor; a link connecting a switch to a router is available with a non-zero scaling factor; and/or a used bandwidth on a link connecting a switch to a router is less than a maximum allowed bandwidth.

Alternatively and/or additionally, process block **520** may include the process blocks illustrated in FIG. **7**. As shown in FIG. **7**, process block **520** may include one or more of determining the query parameters based on a capacity of a link connecting an ATM switch and a router (block **700**), a capacity of a link connecting a LAM and an ATM switch (block **710**), a capacity of a link connecting a LAM and another LAM (block **720**), an availability of a LAM (block **730**), an availability of a link connecting a LAM and another LAM (block **740**), an ATM switch type (block **750**), and/or a capacity of a link connecting a LAM and switch (block **760**). For example, in implementations described above in connection with FIG. **3**, query execution logic **300** may receive end-to-end path request **145**, and may determine parameters of query **150** based on request **145** and/or various path criteria. The various path criteria may include one or more of the following exemplary path criteria: a link between an ATM switch and a router has a PVC count of less than a maximum allowed; a link between a LAM and an ATM switch has a PVC count of less than a maximum allowed; a link between a LAM and another LAM has a PVC count of less than a maximum allowed; a LAM is available; a link connecting a LAM to another LAM is available with a non-zero scaling factor; an ATM switch is an ADN type; and/or a used bandwidth on a link connecting a LAM to a switch is less than a maximum allowed bandwidth.

Process block **540** may include the process blocks illustrated in FIG. **8**. As shown in FIG. **8**, process block **540** may include selecting a line access multiplexer (LAM) based on a location of the customer (block **800**), and determining the end-to-end path from the LAM to a service provider (block **810**). For example, in implementations described above in connection with FIG. **3**, assignment interface server **130** (e.g., via query **150**) may identify a LAM for a location associated with customer **105**, and may determine if an end-to-end path exists for the LAM associated with customer **105** to service provider **125**. If a path exists, assignment interface server **130** (e.g., via query **150**) may identify one or more switches (e.g., ATM switches) and/or routers connected to the LAM in order to identify the end-to-end path from customer **105** to service provider **125**. If a path does not exist, assignment interface server **130** may contact owner of network **115**, and may inform the owner that additional resources are needed to provide network services to customers. Assignment interface server **130** may also inform customer **105** that connection to the network service is unavailable at this time.

FIGS. **9** and **10** depict a flow chart of an exemplary process **900** for assigning an end-to-end path for a large volume of new network service requests without causing resource conflicts, according to implementations described herein. In one implementation, process **900** may be performed by one or more of assignment servers **140**. In another implementation, some or all of process **900** may be performed by another device or group of devices, including or excluding assignment servers **140**.

As illustrated in FIG. **9**, process **900** may begin with receipt of one or more marked network elements for an end-to-end path from an assignment interface server (block **910**), and assignment of a line access multiplexer (LAM) virtual path identifier (VPI) and/or virtual channel identifier (VCI) based on the one or more marked network elements (block **920**). For example, in implementations described above in connection with FIG. **4**, customer based assignment logic **400** of assignment server **140** may receive assignment results **160** (e.g., marked or reserved network elements **120**), and may assign a line access multiplexer (LAM) virtual path identifier (VPI) and/or virtual channel identifier (VCI) **440** for the end-to-end path defined by assignment results **160**. LAM VPI/VCI **440** may include a VPI and/or a VCI of a LAM (e.g., network element **120**) assigned to a customer.

As further shown in FIG. **9**, a switch VPI and/or VCI may be assigned based on the one or more marked network elements (block **930**), and a router VPI and/or VCI may be assigned based on the one or more marked network elements (block **940**). For example, in implementations described above in connection with FIG. **4**, switch assignment logic **410** of assignment server **140** may receive assignment results **160** (e.g., marked or reserved network elements **120**), and may assign switch VPI/VCI **450** for the end-to-end path defined by assignment results **160**. Switch VPI/VCI **450** may include a VPI and/or a VCI of a switch (e.g., network element **120**) assigned to the customer. Router assignment logic **420** of assignment server **140** may receive assignment results **160** (e.g., marked or reserved network elements **120**), and may assign router VPI/VCI **460** for the end-to-end path defined by assignment results **160**. Router VPI/VCI **460** may include a VPI and/or a VCI of a router (e.g., network element **120**) assigned to the customer.

Returning to FIG. **9**, a high capacity link may be assigned via a switch cloud and based on the one or more marked network elements (block **950**), ingress and/or egress switches in the switch cloud may be queried to determine their availability (block **960**), and the end-to-end path may be activated based on the assignments (block **970**). For example, in implementations described above in connection with FIG. **4**, direct PVC assignment logic **430** of assignment server **140** may receive assignment results **160** (e.g., marked or reserved network elements **120**), and may assign high capacity link **470** (e.g., via a switch cloud) for the end-to-end path defined by assignment results **160**. Direct PVC assignment logic **430** may query ingress and/or egress switches in the switch cloud defined by assignment results **160**, as indicated by reference number **480**, to determine their availability. LAM VPI/VCI **440**, switch VPI/VCI **450**, router VPI/VCI **460**, high capacity link **470**, and/or ingress/egress switch query **480** may be collectively referred to as assign network elements for path

165. Assignment server 140 may use "assign network elements for path" 165 to activate an end-to-end path (e.g., end-to-end path 170) in a network (e.g., network 115), which may connect user device 110 to service provider 125. Customer 105 may then use the end-to-end path to access a network service (e.g., provided by service provider 125).

Process block 920 may include the process blocks illustrated in FIG. 10. As shown in FIG. 10, process block 920 may include assigning a line access multiplexer (LAM) virtual path identifier (VPI) and/or virtual channel identifier (VCI) based on a customer type (block 1000), assigning the LAM VPI/VCI based on a pool of LAMs and/or a physical port connected to the customer (e.g., a port of user device 110 associated with customer 105) (block 1010), and marking the assigned LAM VPI/VCI as reserved for the customer (block 1020). For example, in implementations described above in connection with FIG. 4, customer based assignment logic 400 may assign LAM VPI/VCI 440 based on customer type (e.g., a residential customer, a business customer, etc.), based on a pool or plurality of LAM VPI/VCIs, based on a physical port connected to the customer (e.g., a port of user device 110 associated with customer 105), etc. In another example, customer based assignment logic 400 may mark the assigned LAM VPI/VCI 440 as "in use" (i.e., reserved) for a particular customer.

Implementations described herein may include systems and/or methods that define an end-to-end path for a large volume of new network service requests without causing resource conflicts. For example, in one implementation, the systems and/or methods may receive a request for an end-to-end path from a customer, and may determine query parameters based on the request and/or various path criteria. The query may be executed on a database of potential network elements that may form the end-to-end path, and network elements for the end-to-end path may be selected based on the query results. The selected network elements may be reserved (or marked as "in use") in the database, and information identifying the reserved or marked network elements may be output for activation of the end-to-end path.

The foregoing description of implementations provides illustration and description, but is not intended to be exhaustive or to limit the invention to the precise form disclosed. Modifications and variations are possible in light of the above teachings or may be acquired from practice of the invention.

For example, while series of blocks have been described with regard to FIGS. 5-10, the order of the blocks may be modified in other implementations. Further, non-dependent blocks may be performed in parallel.

Also, the terms "user" and/or "customer" have been used herein, and are intended to be broadly interpreted to include user device 110 or a user (e.g., customer 105) of user device 110.

It will be apparent that embodiments, as described herein, may be implemented in many different forms of software, firmware, and hardware in the implementations illustrated in the figures. The actual software code or specialized control hardware used to implement embodiments described herein is not limiting of the invention. Thus, the operation and behavior of the embodiments were described without reference to the specific software code—it being understood that one would be able to design software and control hardware to implement the embodiments based on the description herein.

Further, certain portions of the invention may be implemented as "logic" that performs one or more functions. This logic may include hardware, such as an application specific integrated circuit or a field programmable gate array, software, or a combination of hardware and software.

Even though particular combinations of features are recited in the claims and/or disclosed in the specification, these combinations are not intended to limit the invention. In fact, many of these features may be combined in ways not specifically recited in the claims and/or disclosed in the specification.

No element, act, or instruction used in the present application should be construed as critical or essential to the invention unless explicitly described as such. Also, as used herein, the article "a" is intended to include one or more items. Where only one item is intended, the term "one" or similar language is used. Further, the phrase "based on" is intended to mean "based, at least in part, on" unless explicitly stated otherwise.

What is claimed is:

1. A computing device-implemented method, comprising:
receiving, from a customer, a request for an end-to-end path through a network;
determining parameters of a query based on the request and path criteria,
the determining the parameters of the query comprising at least one of:
determining parameters of the query based on a capacity of at least one network element, or
determining parameters of the query based on an availability of the at least one network element;
executing the query, using the determined parameters, on a memory that stores information identifying network elements to be included in one or more end-to-end paths;
selecting, based on a result of executing the query and in the memory, information identifying each of one or more network elements of the network elements when the result includes information indicating that the one or more network elements are available for the end-to-end path,
the information identifying each of the one or more network elements being not selected when the result includes information indicating that the one or more network elements are not available for the end-to-end path, and
the selecting the information identifying each of the one or more network elements comprising:
selecting, based on information identifying a location of the customer and from the information identifying each of the network elements stored in the memory, information identifying a line access multiplexer (LAM) of the network, the one or more network elements including the LAM;
modifying, in the memory, the information identifying each of the one or more network elements to include information indicating that the one or more network elements are reserved for use for the end-to-end path;
determining the end-to-end path from the LAM to a service provider associated with the request; and
providing the information identifying each of the one or more network elements to a server for activation of the one or more network elements for the end-to-end path.

2. The computing device-implemented method of claim 1, where providing the information identifying each of the one or more network elements comprises:
providing the information identifying each of the one or more network elements to an assignment server for the activation of the requested end-to-end path.

3. The computing device-implemented method of claim 1, where determining the parameters of the query further comprises at least one of:
determining parameters of the query based on a capacity and an availability of a router of the network;

determining parameters of the query based on a capacity of a virtual router of the network;

determining parameters of the query based on a capacity of a switch of the network;

determining parameters of the query based on an availability of the switch;

determining parameters of the query based on an availability of a link connecting the router and the switch;

determining parameters of the query based on an availability of a link connecting the switch and the LAM; or

determining parameters of the query based on a capacity of the link connecting the router and the switch.

4. The computing device-implemented method of claim **1**, where determining the parameters of the query further comprises at least one of:

determining parameters of the query based on a capacity of a link connecting an asynchronous transfer mode (ATM) switch and a router of the network;

determining parameters of the query based on a capacity of a link connecting the ATM switch and the LAM;

determining parameters of the query based on a capacity of a link connecting the LAM and another LAM of the network;

determining parameters of the query based on an availability of the LAM;

determining parameters of the query based on an availability of the link connecting the LAM and the other LAM;

determining parameters of the query based on a type of the ATM switch; or

determining parameters of the query based on an availability of a link connecting the LAM and a switch of the network.

5. A computer-readable memory device comprising:

one or more instructions which, when executed by a processor, cause the processor to:

receive, from a customer, a request for an end-to-end path, through a network, that connects a device, of the customer, to a device of a service provider that provides a network service;

determine parameters of a query, to be executed on a memory that stores information identifying network elements, based on the request,

execute the query, comprising the determined parameters, on the memory, a result of executing the query including information identifying an availability of each of a plurality of the network elements;

select information identifying one or more network elements, of the plurality of the network elements, stored in the memory, based on the information identifying the availability of the one or more network elements indicating that the one or more network elements are available,

information identifying other network elements, of the plurality of the network elements, being not selected when the information identifying the availability of the other network elements indicates that the other network elements are not available, and

the one or more instructions to select the information identifying the one or more network elements including:

one or more instructions to select, based on a location of the customer and from the information identifying the network elements stored in the memory, information identifying a line access multiplexer (LAM) of the network, the request including the information identifying the location of the customer, and the one or more network elements including the LAM;

modify, in the memory, the information identifying the one or more network elements to include information indicating that the one or more network elements are being used for the end-to-end path;

determine the end-to-end path from the LAM to a service provider associated with the network service; and

provide the information identifying the one or more network elements to a server for activation of the end-to-end path to connect the device, of the customer, to the device of the service provider that provides the network service.

6. The computer-readable memory device of claim **5**, where the customer corresponds to a first customer and comprises one of a residential customer or a business customer,

where the end-to-path corresponds to a first end-to-end path, and

where the computer-readable memory device further comprising one or more instructions to:

receive, from a second customer, another request for a second end-to-end path, through the network, that connects a device, of the second customer, to a device of a second service provider that provides a second network service;

execute another query on the memory;

select, in the memory, information identifying one or more other network elements of the network elements, based on a result of executing the other query and the information indicating that the one or more network elements are being used for the end-to-end path; and

modify, in the memory, the information identifying the one or more other network elements to include information indicating that the one or more other network elements are being used for the second end-to-end path.

7. The computer-readable memory device of claim **5**, where the network service comprises at least one of:

a telephone service;

an Internet service;

a network data service;

a radio service;

a television service; or

a video service.

8. The computer-readable memory device of claim **5**, where the memory further stores:

information associated with an availability of each of the network elements;

information associated with a capacity of each of the network elements; and

at least one of:

information associated with a capacity of links between the network elements;

information associated with an availability of the links between the network elements;

information associated with bandwidth of each of the network elements; or

information associated with bandwidth of the links between the network elements.

9. The computer-readable memory device of claim **5**, where each of the network elements comprises at least one of:

a gateway;

a router;

a switch;

an asynchronous transfer mode (ATM) switch;
a firewall;
a network interface card (NIC);
a hub;
a bridge;
a proxy server;
an optical add-drop multiplexer (OADM);
a line access multiplexer (LAM); or
a permanent or private virtual circuit (PVC), and
where the memory is included in a device that is different than the network elements.

10. The computer-readable memory device of claim **5**, where the one or more instructions to determine the parameters of the query further comprise at least one of:
one or more instructions to determine parameters of the query based on a capacity of a virtual router of the network;
one or more instructions to determine parameters of the query based on a capacity of a switch of the network;
one or more instructions to determine parameters of the query based on an availability of the switch;
one or more instructions to determine parameters of the query based on an availability of a link connecting the virtual router and the switch;
one or more instructions to determine parameters of the query based on an availability of a link connecting the switch and the LAM; or
one or more instructions to determine parameters of the query based on a capacity of the link connecting the virtual router and the switch.

11. The computer-readable memory device of claim **5**, where the one or more instructions to determine the parameters of the query further comprise at least one of:
one or more instructions to determine parameters of the query based on a capacity of a link connecting an asynchronous transfer mode (ATM) switch and a router of the network;
one or more instructions to determine parameters of the query based on a capacity of a link connecting the ATM switch and the LAM;
one or more instructions to determine parameters of the query based on a capacity of a link connecting the LAM and another LAM of the network;
one or more instructions to determine parameters of the query based on an availability of the LAM;
one or more instructions to determine parameters of the query based on an availability of the link connecting the LAM and the other LAM;
one or more instructions to determine parameters of the query based on a type of the ATM switch; or
one or more instructions to determine parameters of the query based on an availability of the link connecting the LAM and a switch of the network.

12. The computer-readable memory device of claim **5**, where at least one of the one or more network elements includes at least one of:
a gateway;
a router;
a switch;
an asynchronous transfer mode (ATM) switch;
a firewall;
a network interface card (NIC);
a hub;
a bridge;
a proxy server;
an optical add-drop multiplexer (OADM); or
a permanent or private virtual circuit (PVC).

13. The computer-readable memory device of claim **5**, where:
the customer includes one of a residential user or a business user; and
the network service comprises at least one of:
a telephone service,
an Internet service,
a network data service,
a radio service,
a television service, or
a video service.

14. A system, comprising:
one or more network devices to:
receive, from a user, a request for an end-to-end path through a network, the request comprising information identifying a network service for the end-to-path and information identifying the user;
determine parameters of a query based on the request and path criteria associated with the end-to-end path,
the determined parameters comprising an availability of at least one network element for the end-to-end path;
execute the query on a memory that stores information identifying a plurality of network elements to be included in a plurality of end-to-end paths;
select information identifying one or more network elements, of the plurality of the network elements, stored in the memory, when results of the query include information indicating that the one or more network elements are available for the end-to-end path,
when selecting the information identifying the one or more network elements, the one or more network devices are to:
select, based on a location of the user and from the information identifying the plurality of network elements stored in the memory, information identifying a line access multiplexer (LAM) of the network, the location of the user being included in the information identifying the user, and the one or more network elements including the LAM;
modify, in the memory, the information identifying the one or more network elements for the end-to-end path, to indicate that the one or more network elements are in use for the end-to-end path;
determine the end-to-end path from the LAM to a service provider associated with the network service; and
activate the end-to-end path based on the assigned virtual path identifier or the assigned virtual channel identifier.

15. The system of claim **14**, where the information identifying the network service identifies one of:
a radio service,
a television service, or
a video service.

16. The system of claim **14**, where the memory is included in a device that is different than the plurality of network elements, and
where the determined parameters further comprise:
an availability of a router,
an availability of a link connecting the router and a switch, or
bandwidth information associated with the plurality of network elements.

17. The system of claim **14**, where the one or more network devices are further to:

assign a virtual path identifier or a virtual channel identifier for at least one of the one or more network elements, based on the modified information identifying the one or more network elements.

18. The system of claim **17**, where, when assigning the virtual path identifier or the virtual channel identifier, the one or more network devices are to at least one of:

assign a virtual path identifier or a virtual channel identifier for the LAM based on the information identifying the one or more network elements;

assign a virtual path identifier or a virtual channel identifier for a switch of the network based on the information identifying the one or more network elements; or

assigning a virtual path identifier or a virtual channel identifier for a router of the network based on the information identifying the one or more network elements.

19. The system of claim **18**, where, when assigning the virtual path identifier or the virtual channel identifier for the LAM, the one or more network devices are to at least one of:

assign the virtual path identifier or the virtual channel identifier for the LAM based on a plurality of virtual path identifiers or a plurality of virtual channel identifiers; or

assign the virtual path identifier or the virtual channel identifier for the LAM based on a physical port associated with the user.

20. The system of claim **18**, where, when assigning the virtual path identifier or the virtual channel identifier for the LAM, the one or more network devices are to:

assign the virtual path identifier or the virtual channel identifier for the LAM based on a type of the user.

21. A device comprising:

a memory to store instructions; and

one or more processors to:

receive, from a first user, a request for a first end-to-end path through a network,

determine, based on the request, parameters of a query, to be executed on a memory that stores information identifying network elements,

execute the query, including the determined parameters, on the memory, a result of executing the query including information identifying an availability of each of a plurality of the network elements,

select information identifying one or more network elements of the plurality of the network elements, stored in the memory, based on the information identifying the availability of the one or more network elements indicating that the one or more network elements are available,

modify, in the memory, the information identifying the one or more network elements to include information indicating that the one or more network elements are being used for the first end-to-end path,

provide the information identifying the one or more network elements to a server for activation of the first end-to-end path,

receive, from a second user, another request for a second end-to-end path through the network,

execute another query, that is based on the other request, on the memory,

select, in the memory, information identifying one or more other network elements of the network elements, based on a result of executing the other query and the information indicating that the one or more network elements are being used for the first end-to-end path, and

modify, in the memory, the information identifying the one or more other network elements to include information indicating that the one or more other network elements are being used for the second end-to-end path.

22. The device of claim **21**, where the information identifying the network elements includes at least one of:

information identifying an availability of each of the network elements,

information identifying a capacity of each of the network elements,

information identifying a capacity of links between the network elements,

information identifying an availability of the links between the network elements,

information identifying bandwidth of each of the network elements, or

information identifying bandwidth of the links between the network elements.

23. A method comprising:

receiving, from a first user, a request for a first end-to-end path through a network;

determining, based on the request, parameters of a first query, to be executed on a memory that stores information identifying network elements;

executing the first query, including the determined parameters, on the memory, a result of executing the first query including information identifying an availability of each of a plurality of the network elements;

selecting information identifying one or more network elements of the plurality of the network elements, stored in the memory, based on the information identifying the availability of the one or more network elements indicating that the one or more network elements are available;

modifying, in the memory, the information identifying the one or more network elements to include information indicating that the one or more network elements are being used for the first end-to-end path;

providing the information identifying the one or more network elements to a server for activation of the first end-to-end path;

receiving, from a second user, another request for a second end-to-end path through the network;

executing a second query, that is based on the other request, on the memory;

selecting, in the memory, information identifying one or more other network elements of the network elements, based on a result of executing the second query and the information indicating that the one or more network elements are being used for the first end-to-end path; and

modifying, in the memory, the information identifying the one or more other network elements to include information indicating that the one or more other network elements are being used for the second end-to-end path.

24. The method of claim **23**, where the information identifying the network elements includes at least one of:

information identifying an availability of each of the network elements,

information identifying a capacity of each of the network elements,

information identifying a capacity of links between the network elements,

information identifying an availability of the links between the network elements,

information identifying bandwidth of each of the network elements, or

information identifying bandwidth of the links between the network elements.

25. The method of claim **23**, where determining the parameters of the first query further comprises determining parameters of the first query based on at least one of:

a capacity and an availability of a router of the network;

a capacity of a virtual router of the network;

a capacity of a switch of the network;

an availability of the switch;

an availability of a link connecting the router and the switch;

an availability of a link connecting the switch and a line access multiplexer (LAM) of the network; or

a capacity of the link connecting the router and the switch.

* * * * *