US 20070065039A1

(19) United States

(12) Patent Application Publication

(10) Pub. No.: US 2007/0065039 A1

(43) Pub. Date: Mar. 22, 2007

Park et al.

(54) IMAGE CAPTURING APPARATUS WITH IMAGE COMPENSATION AND METHOD THEREOF

(75) Inventors: **Tae-suh Park**, Yongin-si (KR); **Yeun-bae Kim**, Seongnam-si (KR); **Min-kyu Park**, Seongnam-si (KR)

Correspondence Address:
STAAS & HALSEY LLP
SUITE 700
1201 NEW YORK AVENUE, N.W.
WASHINGTON, DC 20005 (US)

(73) Assignee: **SAMSUNG ELECTRONICS CO., LTD.**, Suwon-si (KR)

(21) Appl. No.: **11/525,055**

(22) Filed: **Sep. 22, 2006**

(30) **Foreign Application Priority Data**

Sep. 22, 2005 (KR) 10-2005-0088356
Sep. 1, 2006 (KR) 10-2006-0084321

Publication Classification

(51) **Int. Cl.**
G06K 9/40 (2006.01)
H04N 5/228 (2006.01)

(52) **U.S. Cl.** **382/275**; 348/222.1

(57) **ABSTRACT**

An image capturing apparatus with image compensation and a method thereof, which can perform compensation of a user's facial image that is distorted in accordance with the position of an image capturing device such as a camera. The image capturing apparatus with image compensation includes an image capturing unit capturing an image of an object, a tilt determining unit determining a tilt of the image capturing unit relative to the object, and a compensation unit compensating the captured image in accordance with the determined tilt.

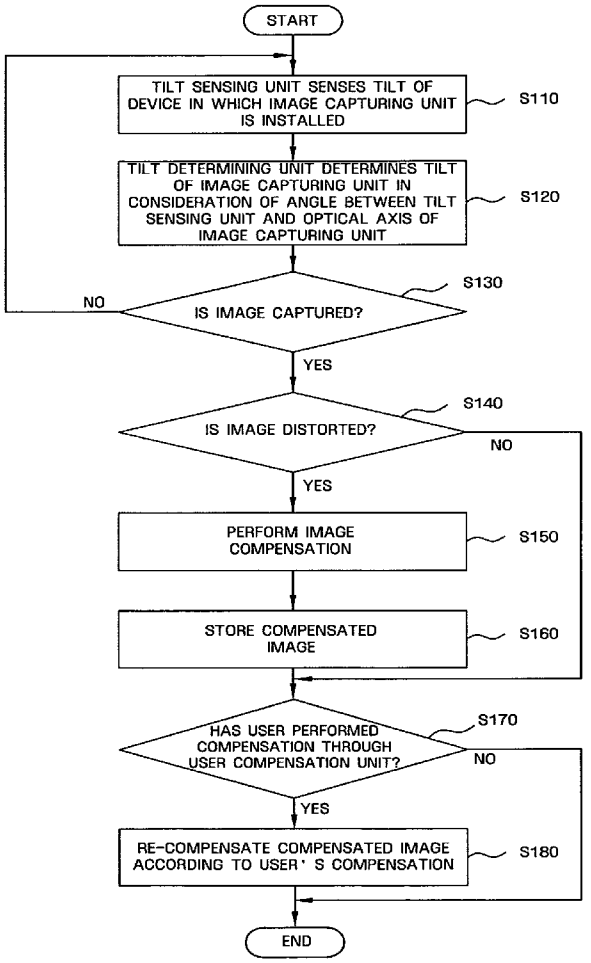

FIG. 1A

BELOW USER' S FACE

FIG. 1B

IN FRONT OF USER' S FACE

FIG. 1C

OVER USER' S FACE

FIG. 2

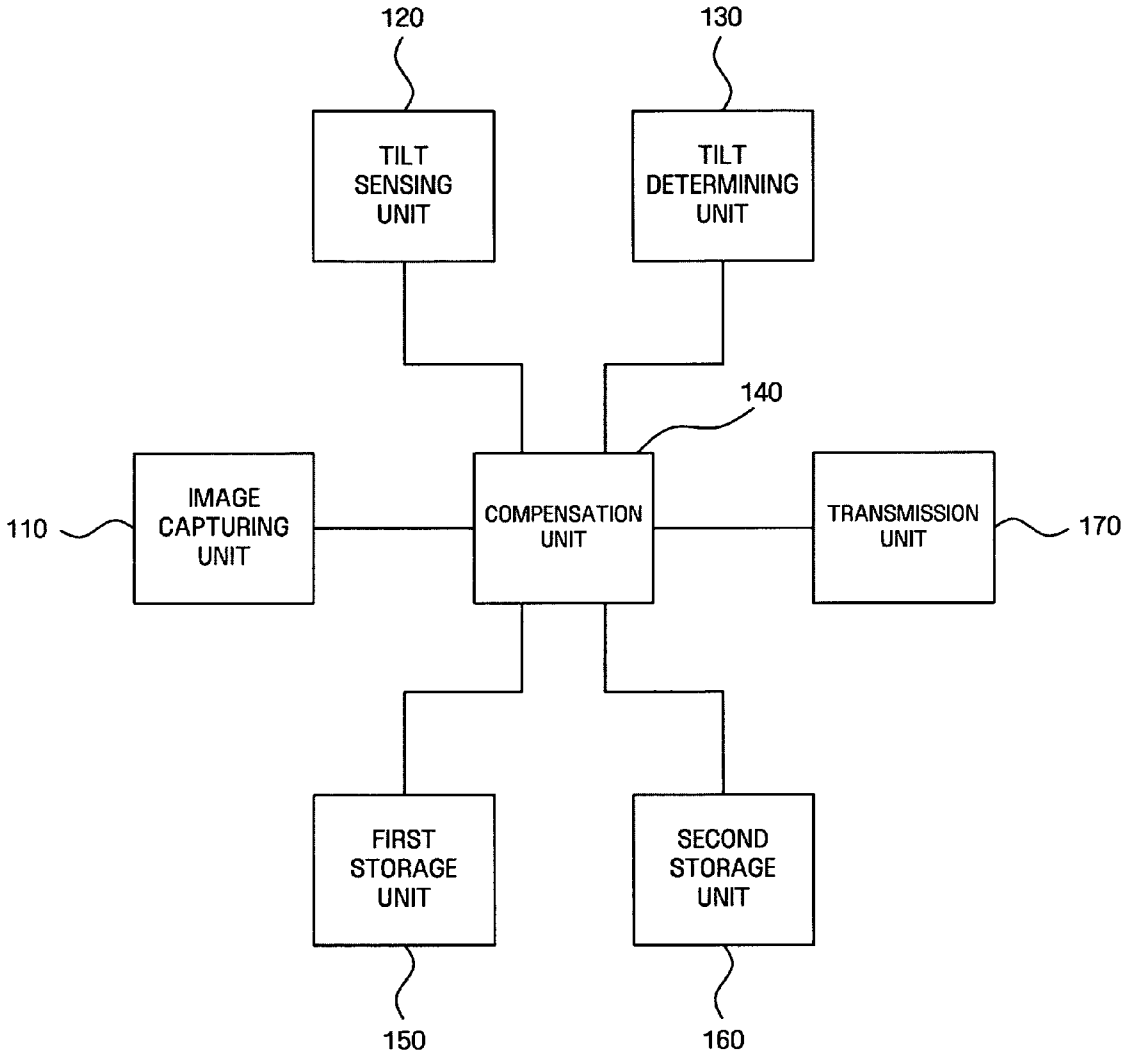
120
130
TILT SENSING UNIT
TILT DETERMINING UNIT
140
110
IMAGE CAPTURING UNIT
COMPENSATION UNIT
TRANSMISSION UNIT
170
FIRST STORAGE UNIT
SECOND STORAGE UNIT
150
160

FIG. 3

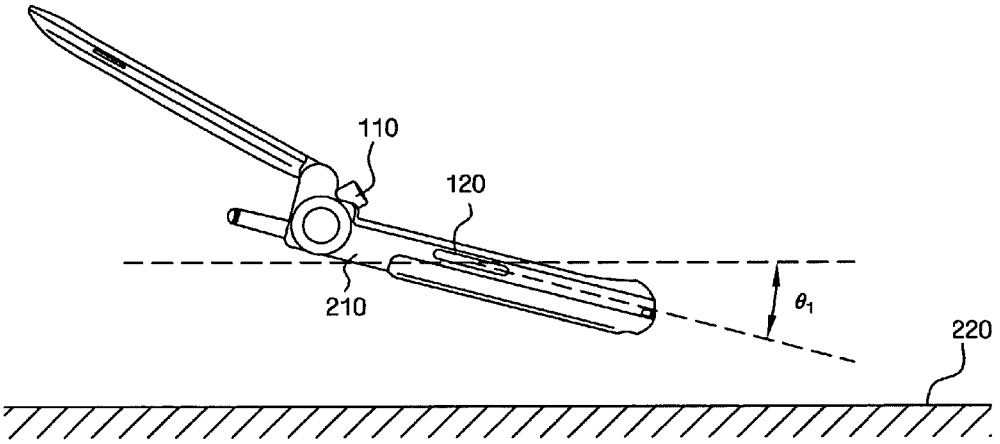

FIG. 4

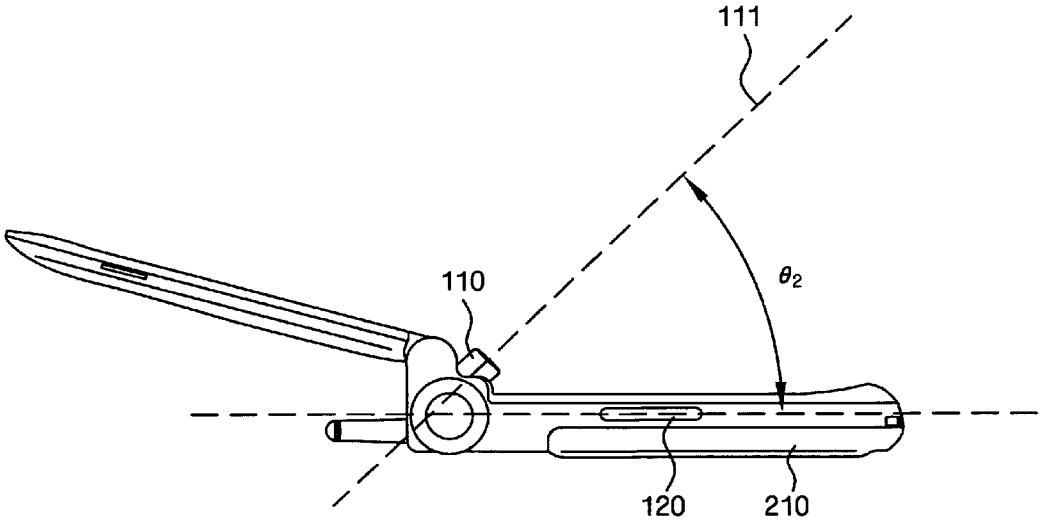

FIG. 5

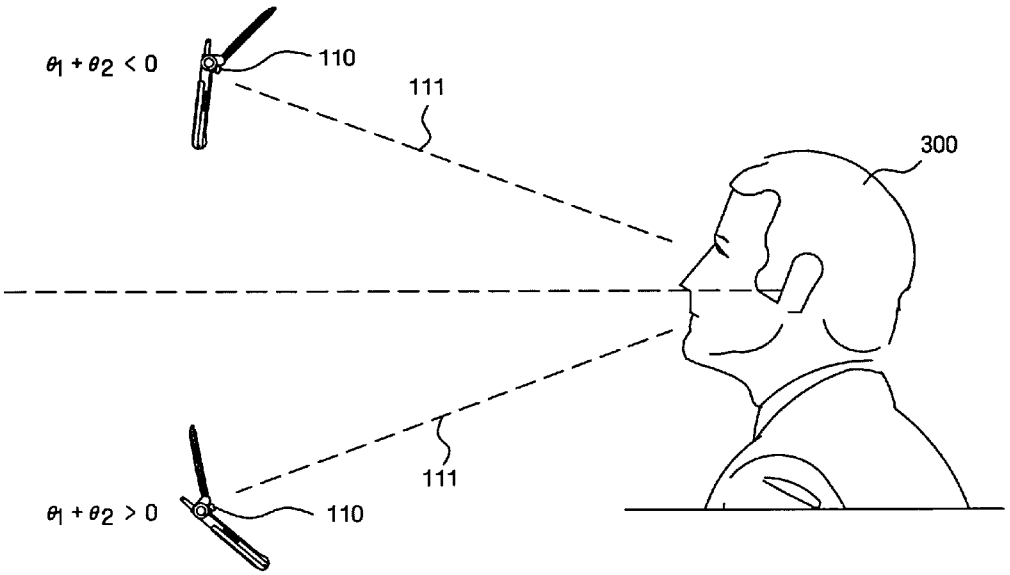

FIG. 6A

BEFORE COMPENSATION

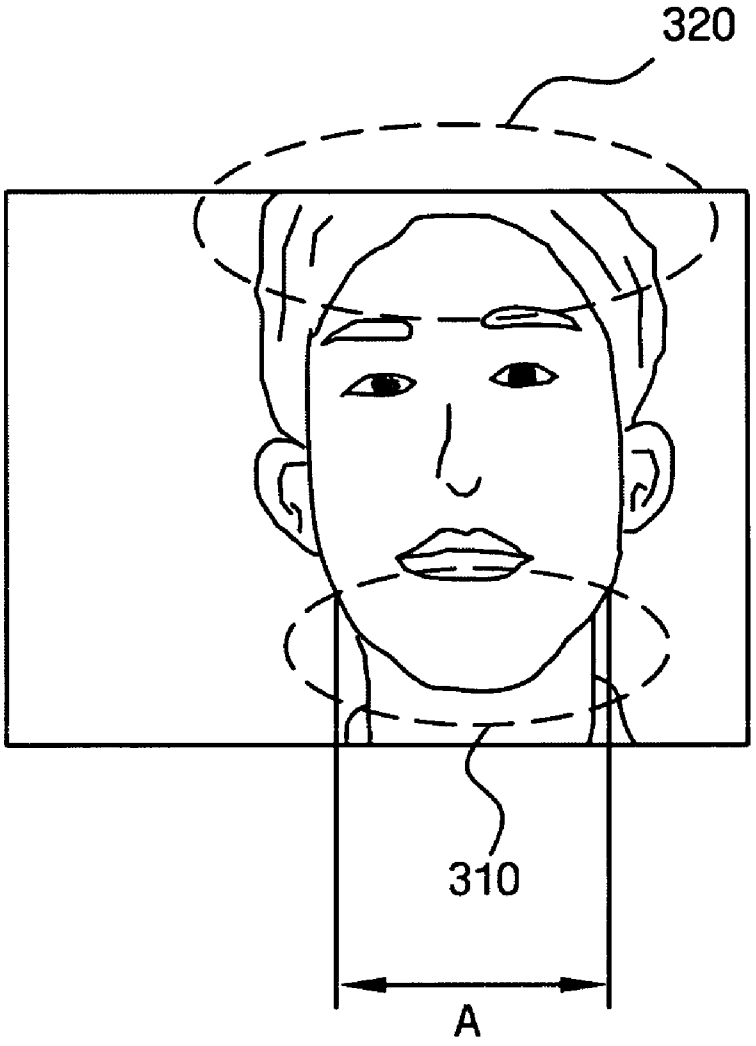

FIG. 6B

AFTER COMPENSATION

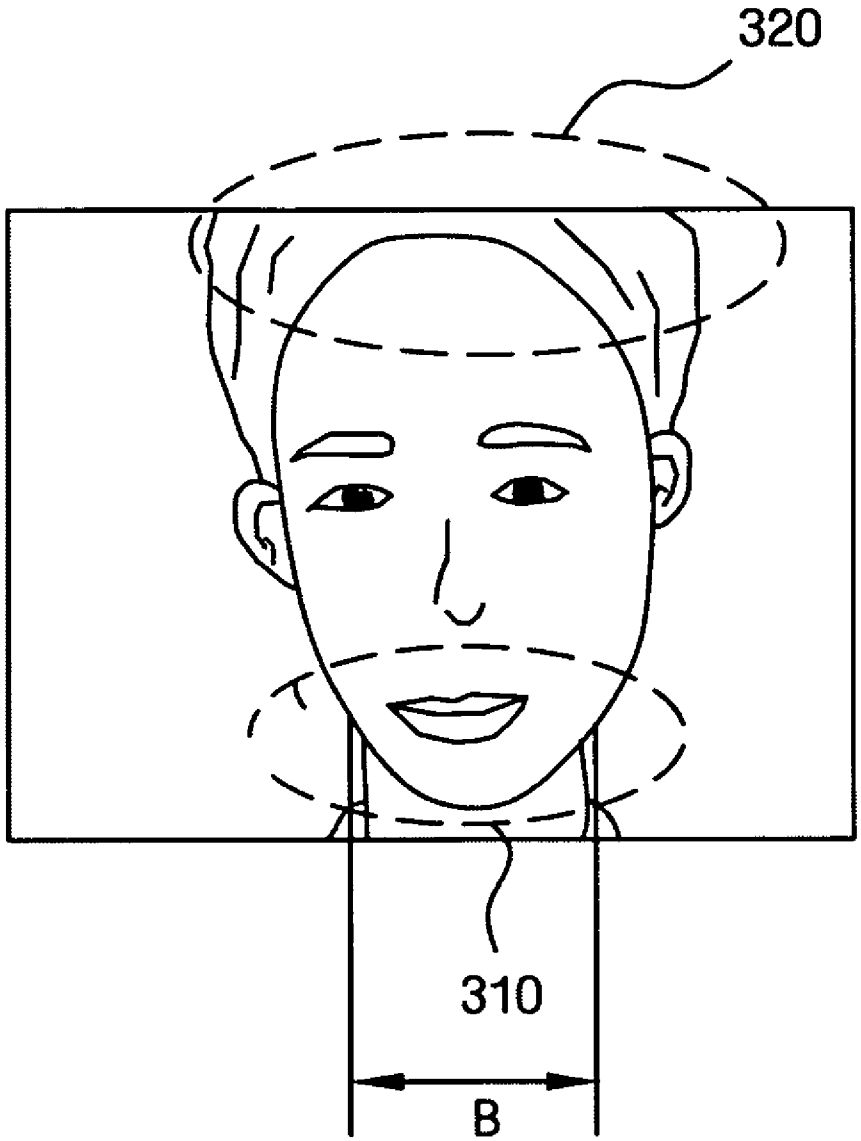

FIG. 7

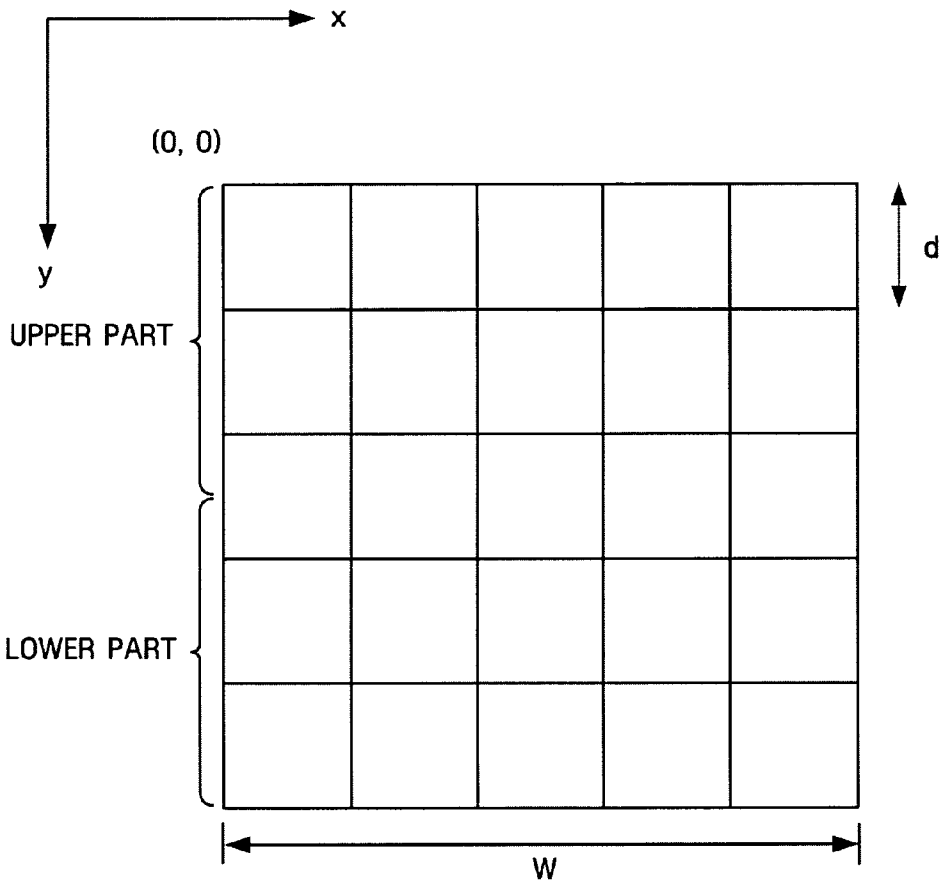

FIG. 8

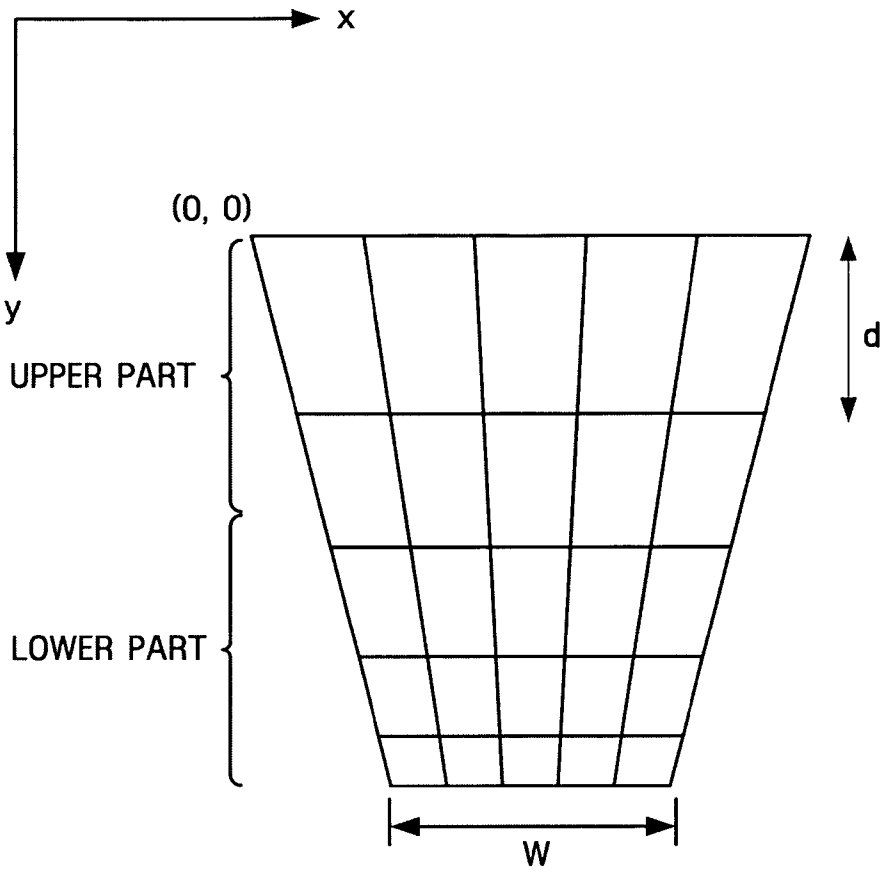

FIG. 9

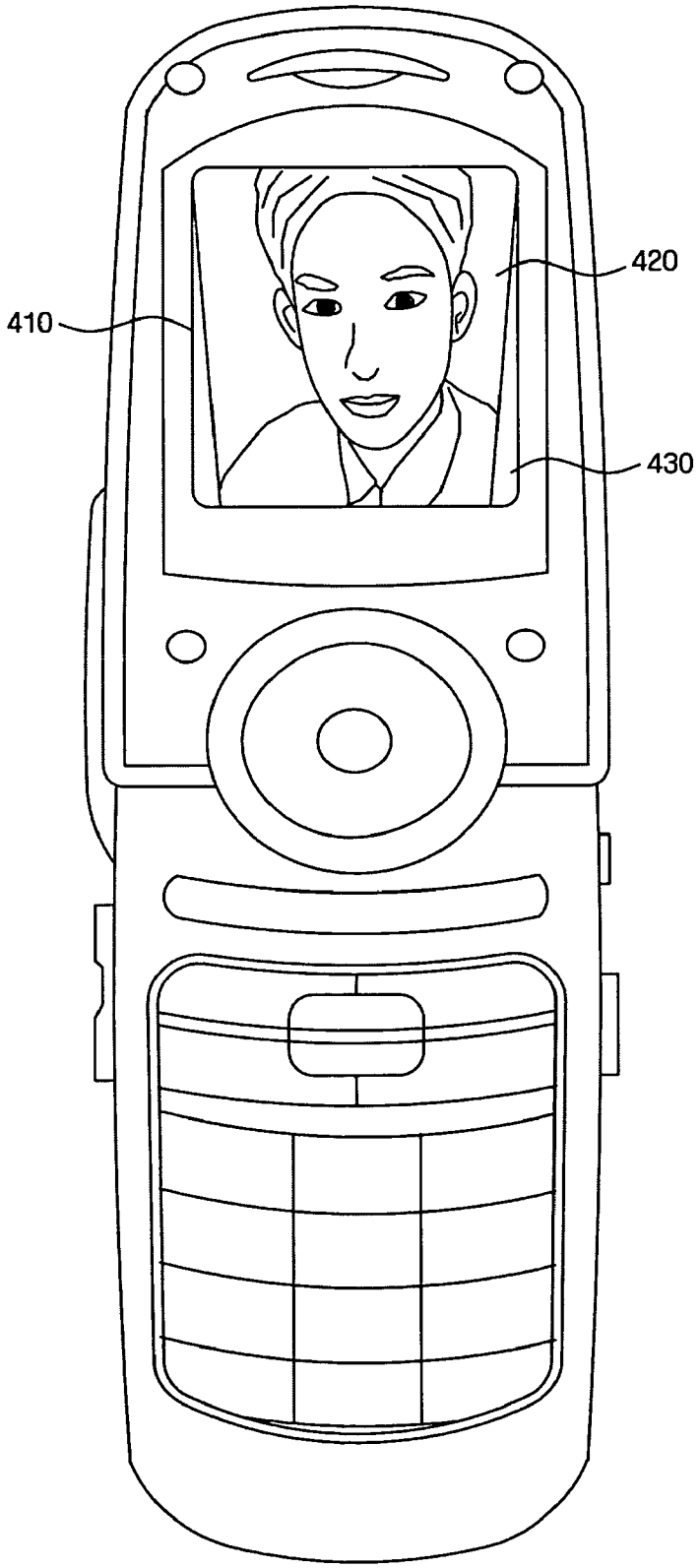

FIG. 10A

FIG. 10B

FIG. 10C

FIG. 10D

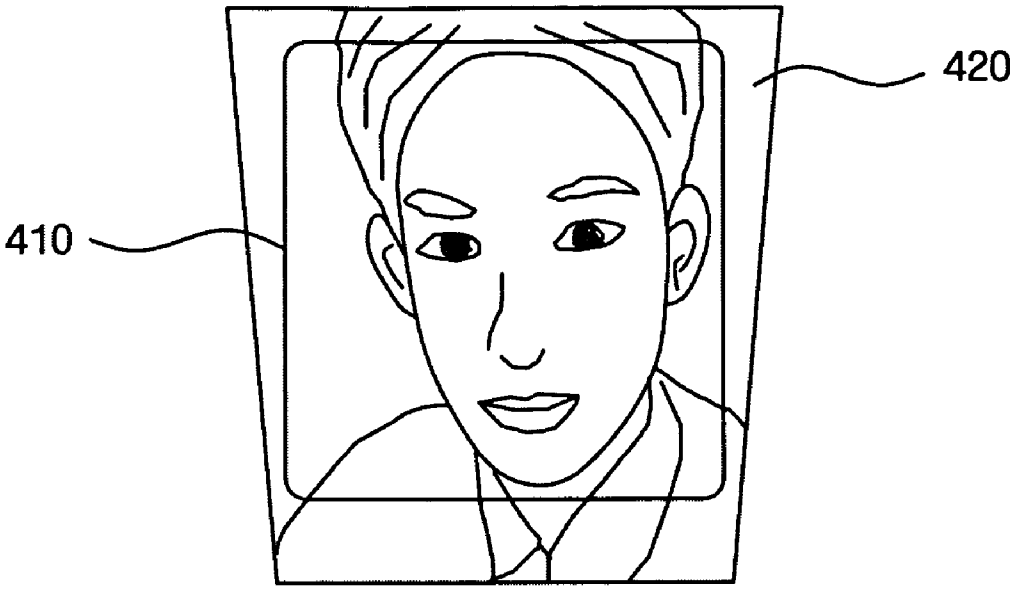

FIG. 11

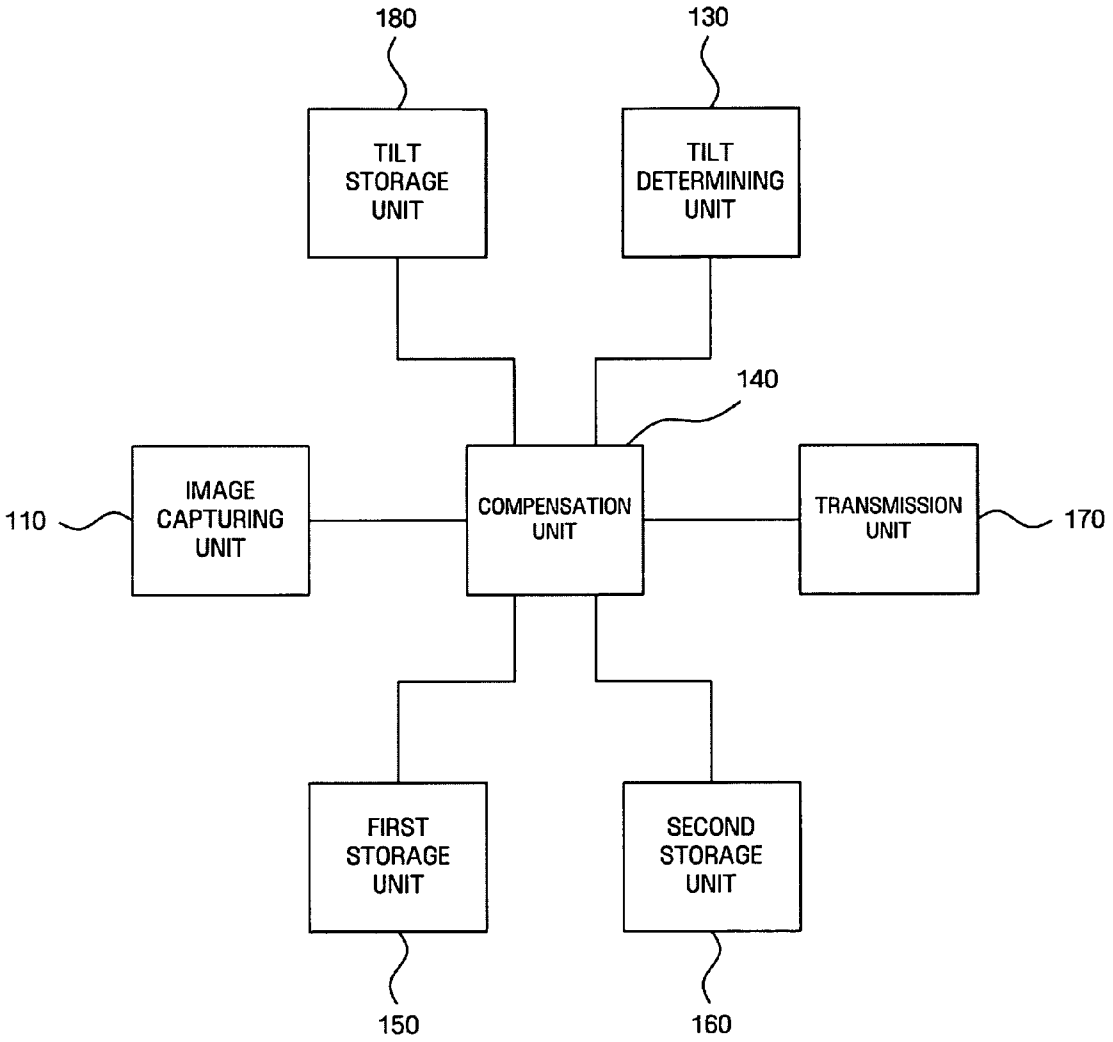
180
130
TILT STORAGE UNIT
TILT DETERMINING UNIT
140
110
IMAGE CAPTURING UNIT
COMPENSATION UNIT
TRANSMISSION UNIT
170
FIRST STORAGE UNIT
SECOND STORAGE UNIT
150
160

FIG. 12

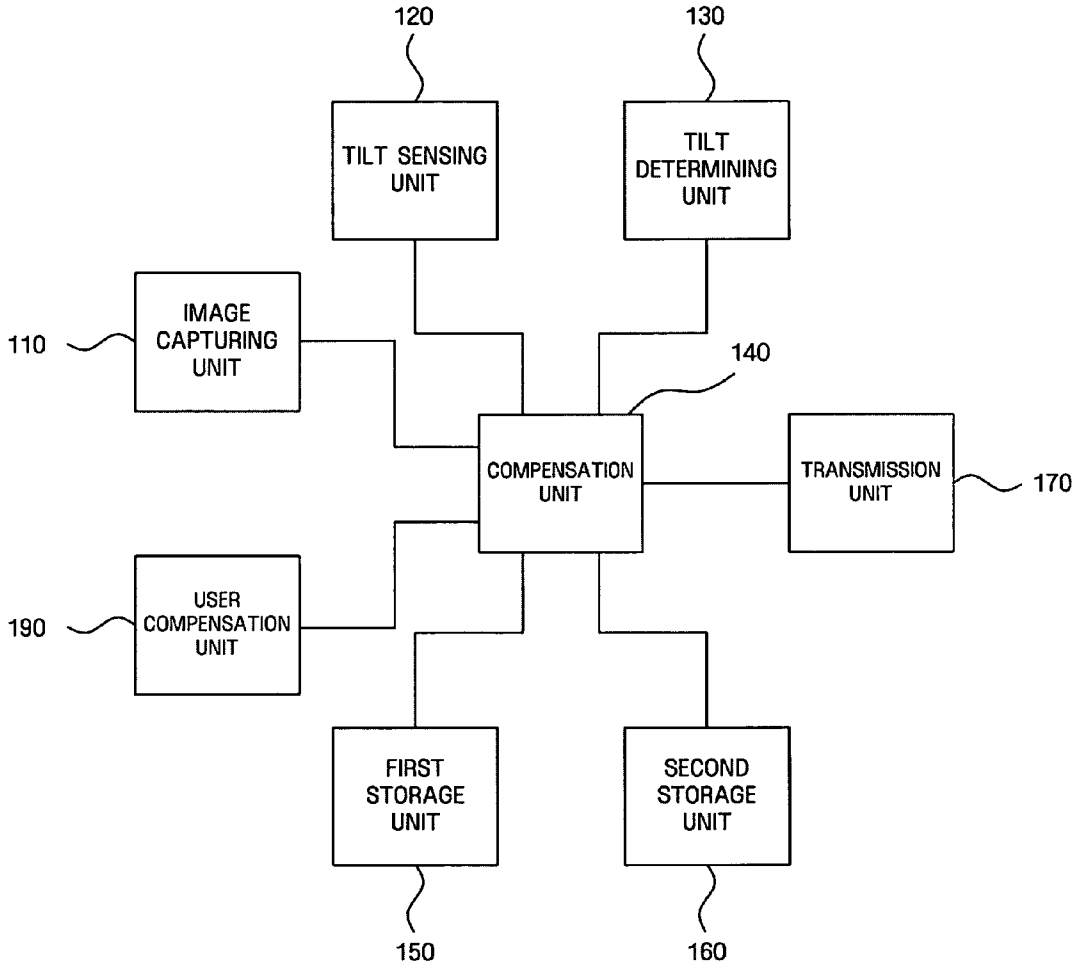
120
TILT SENSING UNIT
130
TILT DETERMINING UNIT
110
IMAGE CAPTURING UNIT
140
COMPENSATION UNIT
TRANSMISSION UNIT
170
190
USER COMPENSATION UNIT
FIRST STORAGE UNIT
SECOND STORAGE UNIT
150
160

FIG. 13

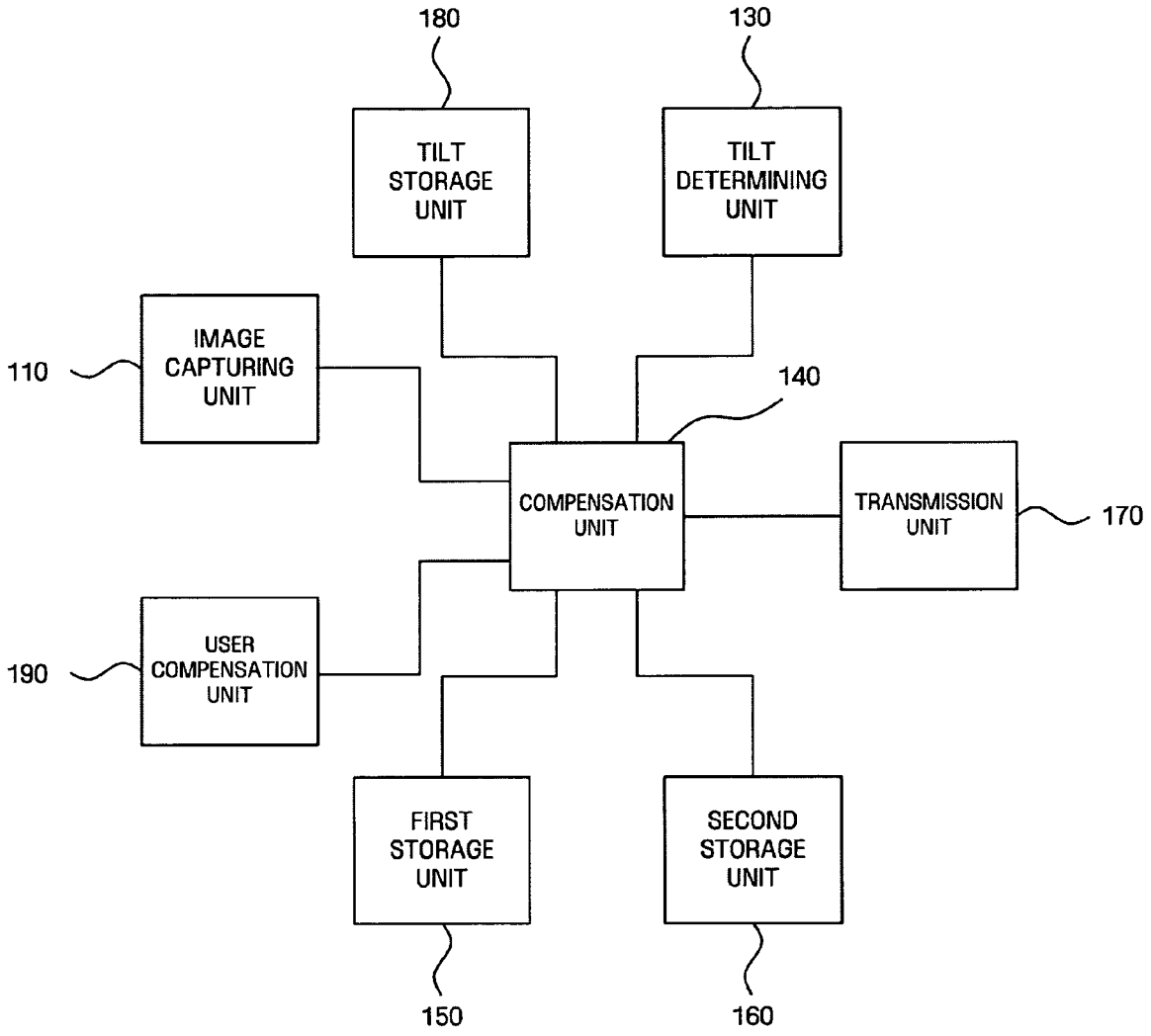
180
130
TILT STORAGE UNIT
TILT DETERMINING UNIT
110
IMAGE CAPTURING UNIT
140
COMPENSATION UNIT
TRANSMISSION UNIT
170
190
USER COMPENSATION UNIT
FIRST STORAGE UNIT
SECOND STORAGE UNIT
150
160

FIG. 14

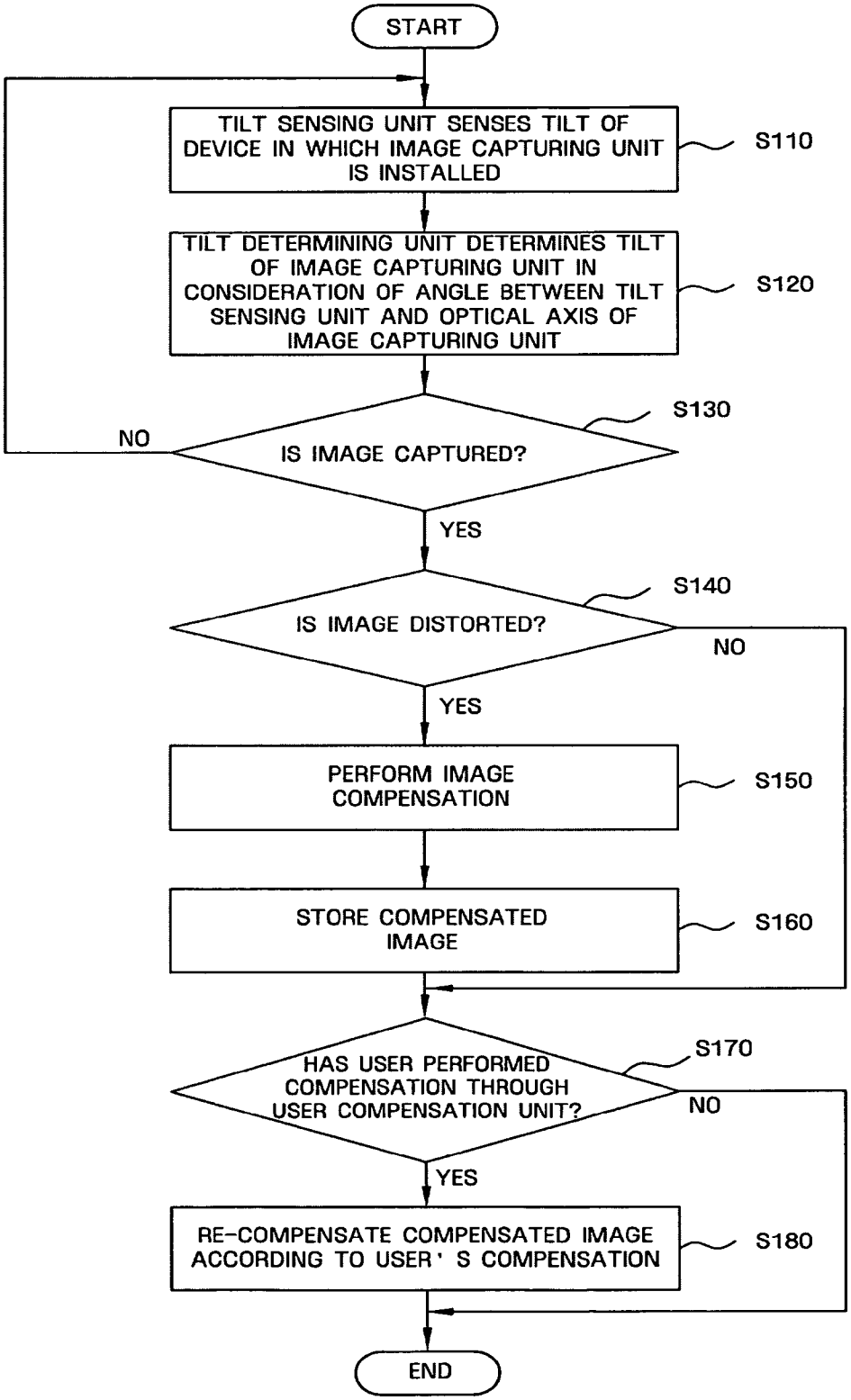
START
TILT SENSING UNIT SENSES TILT OF DEVICE IN WHICH IMAGE CAPTURING UNIT IS INSTALLED
S110
TILT DETERMINING UNIT DETERMINES TILT OF IMAGE CAPTURING UNIT IN CONSIDERATION OF ANGLE BETWEEN TILT SENSING UNIT AND OPTICAL AXIS OF IMAGE CAPTURING UNIT
S120
S130
NO
IS IMAGE CAPTURED?
YES
S140
IS IMAGE DISTORTED?
NO
YES
PERFORM IMAGE COMPENSATION
S150
STORE COMPENSATED IMAGE
S160
S170
HAS USER PERFORMED COMPENSATION THROUGH USER COMPENSATION UNIT?
NO
YES
RE-COMPENSATE COMPENSATED IMAGE ACCORDING TO USER' S COMPENSATION
S180
END

FIG. 15

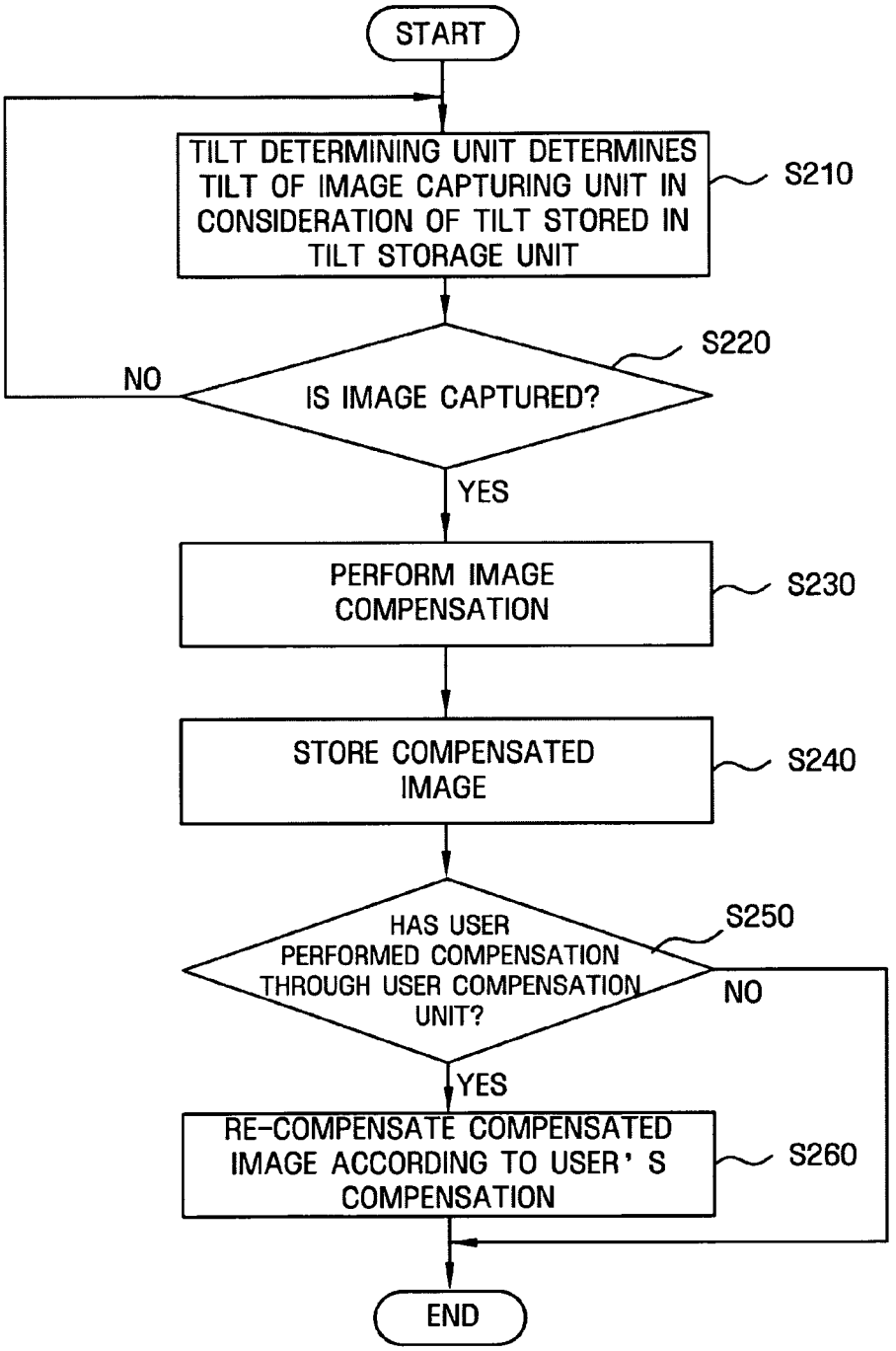
START
TILT DETERMINING UNIT DETERMINES TILT OF IMAGE CAPTURING UNIT IN CONSIDERATION OF TILT STORED IN TILT STORAGE UNIT
S210
IS IMAGE CAPTURED?
S220
NO
YES
PERFORM IMAGE COMPENSATION
S230
STORE COMPENSATED IMAGE
S240
HAS USER PERFORMED COMPENSATION THROUGH USER COMPENSATION UNIT?
S250
NO
YES
RE-COMPENSATE COMPENSATED IMAGE ACCORDING TO USER' S COMPENSATION
S260
END

IMAGE CAPTURING APPARATUS WITH IMAGE COMPENSATION AND METHOD THEREOF

CROSS-REFERENCE TO RELATED APPLICATIONS

[0001] This application claims priority from Korean Patent Application Nos. 10-2005-0088356 and 10-2006-0084321, filed on Sep. 22, 2005 and Sep. 1, 2006, respectively, the disclosures of which are hereby incorporated herein by reference.

BACKGROUND OF THE INVENTION

[0002] 1. Field of the Invention

[0003] The present invention relates to an image capturing apparatus with image compensation and a method thereof, and more particularly to an image capturing apparatus with image compensation and a method thereof, which can perform compensation of a user's facial image that is distorted in accordance with the position of a camera relative to an imaged object.

[0004] 2. Description of Related Art

[0005] Recently, mobile communication devices provided with cameras for capturing images have come into widespread use. With such devices, a user can capture an image of the user's face by using a mobile communication device, and set the captured image on the display screen of the mobile communication device, or transmit the captured image to another user through a wireless network, to communicate with other users. An IMT-2000 service, which is the recently appearing next-generation mobile communication service, goes a step further to provide a video photography function between users of mobile communication devices having provided with cameras.

[0006] During video telephony operation, a user maintains a posture looking down toward the mobile communication device in hand because video telephony generally requires that the user continuously gaze at a communication partner's facial image displayed on the screen of the mobile communication device for several to tens of minutes. That is, the camera attached to the mobile communication device is mostly located below the user's face to capture the face of the user. In this case, the image of the user's face in three-dimensions is distorted in such a manner that user's chin appears to be larger that it actually is and user's forehead appears to be more narrow than it actually is. This phenomenon is called perspective. This distorted facial image is generally unnatural to users and may cause psychological rejection, which may delay the widespread use of video photography devices.

[0007] Specifically, if a mobile communication device is located below a user's face as illustrated in FIG. 1A, in front of the user's face as illustrated in FIG. 1B, or over (i.e., above) the user's face as illustrated in FIG. 1C, user's facial images captured by the mobile communication device may differ depending on the image capturing angles. As described above, if the user maintains a posture looking down on the mobile communication device, i.e., if the user's facial image is captured by the mobile communication device that is positioned below the user's face, the user's chin appears to be larger and the user's forehead appears to be narrowed. That is, the user's chin appears to be wider than normal, while the user's forehead part appears to be narrowed.

[0008] Korean Patent Unexamined Publication No. 2004-0107890 discloses an image display compensation method for a mobile phone that adjusts a captured image parallel to user's eyes by automatically performing compensation of an image tilt appearing on a display screen of the mobile phone, in accordance with a relative rotating-angle difference between the user and the display screen of the mobile phone. According to this method of operating the image capturing apparatus, the displayed information can be recognized more easily and naturally by making the image parallel to the user's eyes, irrespective of the user's motion, by performing compensation on the rotating angle of the image that is seen through the mobile phone.

[0009] However, a method or apparatus for compensating for a three-dimensional distortion occurring in the process of capturing the facial image of a user who is looking down towards the camera during the video photography is not yet available.

BRIEF SUMMARY

[0010] An aspect of the present invention provides an image capturing apparatus with image compensation and a method thereof, which can obtain an image desired by a user by determining the tilt status of a mobile communication device that captures the image of an object and performing compensation of the captured image in accordance with the determined tilt status of the device during a video telephony using the mobile communication device.

[0011] According to an aspect of the present invention, there is provided an image capturing apparatus with image compensation, the image capturing apparatus including an image capturing unit capturing an image of an object, a tilt determining unit determining a tilt of the image capturing unit against the object, and a compensation unit compensating the captured image in accordance with the determined tilt.

[0012] According to another aspect of the present invention, there is provided an image compensation method, the method including capturing an image of an object, determining a tilt of the image capturing unit relative to the object, and compensating the captured image in accordance with the determined tilt.

[0013] According to another aspect of the present invention, there is provided a video telephony apparatus including an image capturing unit in a device, having an optical axis, and movable relative to a main body of the device, a tilt sensing unit in the main body sensing a tilt of the device relative to horizontal, a tilt calculation unit calculating a tilt of the image capturing unit based on an angle between a plane in the main body and the optical axis, and a compensation unit compensating for distortion of an image captured by the image capturing unit, based on the calculated tilt.

[0014] According to another aspect of the present invention, there is provided an image compensation method, including sensing a first tilt angle which is an angle of a device in which an image capturing unit is installed relative to a horizontal plane, calculating a second tilt angle which is an angle of the image capturing unit relative to the device,

capturing an image of an object and determining, based on the first and the second tilt angles, whether the image capturing unit is above the object, below the object or level with the object, and compensating for image distortion of the captured image when the image capturing unit is determined to be above or below the object.

[0015] According to other aspects of the present invention, there are provided computer-readable storage media encoded with processing instructions for causing a processor to execute the aforementioned methods.

[0016] Additional and/or other aspects and advantages of the present invention will be set forth in part in the description which follows and, in part, will be obvious from the description, or may be learned by practice of the invention.

BRIEF DESCRIPTION OF THE DRAWINGS

[0017] The above and/or other aspects and advantages of the present invention will become apparent and more readily appreciated from the following detailed description, taken in conjunction with the accompanying drawings of which:

[0018] FIGS. **1**A to **1**C are exemplary views illustrating images captured by a general video photography device;

[0019] FIG. **2** is a block diagram illustrating the construction of an image capturing apparatus with image compensation according to an embodiment of the present invention;

[0020] FIG. **3** is a view illustrating a tilt sensing unit according to an embodiment of the present invention;

[0021] FIG. **4** is a view illustrating an image capturing unit and a tilt sensing unit according to an embodiment of the present invention;

[0022] FIG. **5** is a view illustrating a mobile communication device that captures images of an object according to an embodiment of the present invention;

[0023] FIGS. **6**A and **6**B are views illustrating a captured image and a compensated image according to an embodiment of the present invention;

[0024] FIG. **7** is a view explaining divided parts of an image before being compensated according to an embodiment of the present invention;

[0025] FIG. **8** is a view explaining divided parts of a compensated image according to an embodiment of the present invention;

[0026] FIG. **9** is a view illustrating a surplus region in a display region according to an embodiment of the present invention;

[0027] FIGS. **10**A to **10**D are views explaining a method of processing a surplus region in a display region according to an embodiment of the present invention;

[0028] FIG. **11** is a block diagram illustrating the construction of an image capturing apparatus with image compensation according to an embodiment of the present invention;

[0029] FIG. **12** is a block diagram illustrating the construction of an image capturing apparatus with image compensation that is provided by adding a user compensation unit to the apparatus of FIG. **2**;

[0030] FIG. **13** is a block diagram illustrating the construction of an image capturing apparatus with image compensation provided by adding a user compensation unit to the apparatus of FIG. **11**;

[0031] FIG. **14** is a flowchart illustrating an image compensation method according to an embodiment of the present invention; and

[0032] FIG. **15** is a flowchart illustrating an image compensation method according to an embodiment of the present invention.

DETAILED DESCRIPTION OF EMBODIMENTS

[0033] Reference will now be made in detail to embodiments of the present invention, examples of which are illustrated in the accompanying drawings, wherein like reference numerals refer to the like elements throughout. The embodiments are described below in order to explain the present invention by referring to the figures.

[0034] In the description of an embodiment that follows, an image capturing apparatus with image compensation is descried as being applied to devices such as a camera and mobile communication device (e.g., a mobile phone or a personal digital assistant (PDA)) having a camera attached thereto. However, it is to be understood that these are merely non-limiting examples, and that the apparatus of the present embodiment may also be applied to, for example, a camera connected to a personal computer. Also, image compensation according to an embodiment compensates the captured image in accordance with the position of a module that captures the image of an object. And, in the present embodiment, in order to judge the position of the module that captures the image of an object, a device that can sense the tilt against a specified reference plane, such as, by way of non-limiting examples, a tilt sensor and an accelerometer, may be used, or a predetermined tilt may be used.

[0035] FIG. **2** is a block diagram illustrating the construction of an image capturing apparatus with image compensation according to an embodiment of the present invention.

[0036] As illustrated in FIG. **2**, the image capturing apparatus **100** with image compensation, according to an embodiment of the present invention, includes an image capturing unit **110** capturing the image of a specified object, a tilt sensing unit **120** sensing a tilt of a device in which the image capturing unit **110** is installed, a tilt determining unit **130** determining the tilt of the image capturing unit **110** in accordance with the sensed tilt, and a compensation unit **140** performing compensation of the captured image in accordance with the determined tilt.

[0037] The image capturing apparatus **100** also includes a first storage unit **150** storing captured images and compensated images, a second storage unit **160** storing tilts sensed by the tilt sensing unit **120** and tilts determined by the tilt determining unit **130**, and a transmission unit **170** transmitting the compensated image to an outside through a specified interface. In the present embodiment, the first storage unit **150**, the second storage unit **160**, and the transmission unit are optional.

[0038] In the description of the present embodiment that follows, the object is a person. Also, the position of the image capturing unit **110** is a position looking up at the

object. In other words, the image capturing unit **110** is located below a plane on which the object is positioned and which is perpendicular to the direction of gravity. Accordingly, the image capturing unit **110** is located below the object to photograph the object. However, it is to be understood that these are merely non-limiting examples and that other orientations are contemplated.

[**0039**] The image capturing unit **110** may be, by way of a non-limiting example, a camera mounted in the mobile communication device, and images captured by the image capturing unit **110** may be stored in the first storage unit **150**. The first storage unit **150** may be, by way of non-limiting examples, a cache, ROM, PROM, EPROM, EEPROM, flash, or SRAM. In the description of the present embodiment that follows, a flash memory, which is a nonvolatile memory, is used as the first storage unit **150**.

[**0040**] The image capturing unit **110** is mounted in the mobile communication device. However, it is to be understood that this is merely a non-limiting example to enhance understanding of the present embodiment. The image capturing unit **110** can be applied to other devices that require the photographing of an object.

[**0041**] The tilt sensing unit **120** can sense the tilt of the device in which the image capturing unit **110** is installed against a specified reference plane by using a device that can sense the tilt against the specified reference plane, such as, by way of a non-limiting example, a tilt sensor and an accelerometer. In other words, if the object is a person, the image sensing unit **120** can sense the tilt between the person and the image capturing unit from a relative position between facial feature points of the person, using the image captured by the image capturing unit **110**. In this case, the reference plane is a plane that is perpendicular to the direction of gravity, on the assumption that the above-described sensors are is used as measuring means. In the description of the present embodiment that follows, the reference plane is the ground. However, it is to be understood that this is merely a non-limiting example.

[**0042**] The tilt sensing unit **120** is installed inside the mobile communication device that is generally divided into a main body and a display device.

[**0043**] Now, a condition in which the tilt of the main body of the mobile communication device against the ground is sensed will be explained.

[**0044**] FIG. **3** is a view illustrating the tilt sensing unit **120** of FIG. **1** that senses the tilt of the main body of the mobile communication device against (i.e., relative to) the ground according to an embodiment of the present invention.

[**0045**] Referring to FIGS. **2** and **3**, the tilt sensing unit **120** is installed in the main body **210** of the mobile communication device. The tilt sensing unit **120** senses the tilt of the main body **210** of the mobile communication device against a plane that is parallel to the ground **220**. The sensed tilt is stored in the second storage unit **160**. The second storage unit **160** may be, by way of non-limiting examples, a cache, ROM, PROM, EPROM, EEPROM, flash, or SRAM. In addition, the first storage unit **150** and the second storage unit are respectively constructed by hardware, but are not limited thereto. Rather, they may be, by way of a non-limiting example, integrated by hardware.

[**0046**] The tilt of the main body **210** of the mobile communication device against a plane that is parallel to the ground **220** is indicated "Θ_1". The use of the ground as the reference to the tilt sensed by the tilt sensing unit **120** is a non-limiting example to facilitate the understanding of the present embodiment, and the reference plane to the tilt sensed by the tilt sensing unit **120** may be changed depending on the image capturing environment. As illustrated in FIG. **3**, $\Theta_1$has a negative value against the ground **220**. However, it is to be understood that Θ_1 need not be negative and could have a positive value.

[**0047**] The tilt determining unit **130** calculates the tilt of the image capturing unit **110** in consideration of the angle between the tilt sensing unit **120** and an optical axis **111** of FIG. **4** of the image capturing unit **110**, on the basis of the tilt sensing unit **120**. The tilt calculated by the tilt determining unit **130** is stored in the second storage unit **160** in the same manner as the tilt sensed by the tilt sensing unit **120**. The tilt of the image capturing unit **110** is calculated in consideration of the tilt sensed by the tilt sensing unit **120** and the angle between the tilt sensing unit **120** and the image capturing unit **110**, and thus it can be a measure of the position of the mobile communication device on the basis of a specified object. Specifically, referring to FIGS. **2**-**4**, the tilt determining unit **130** calculates the angle between the tilt sensing unit **120** installed in the main body **210** of the mobile communication device and the optical axis **111** of the image capturing unit **120**, and then calculate the tilt of the image capturing unit **110** through the calculated angle and the tilt sensed by the tilt sensing unit **120**. The angle between the image capturing unit **110** and the tilt sensing unit **120** is indicated "Θ_2" as illustrated in FIG. **4**. As illustrated in FIG. **4**, Θ_2 has a positive value against the tilt sensing unit **120**. However, it is to be understood that Θ_1 need not be negative and could have a positive value. Accordingly, the tilt calculated by the tilt determining unit **130** may be "$\Theta_1+\Theta_2$".

[**0048**] The compensation unit **140** determines whether the image capturing unit **110** is located over (i.e. above) the object or below the object through "$\Theta_1+\Theta_2$" that is the tilt calculated by the tilt determining unit **130**. For example, if "$\Theta_1+\Theta_2$" is "0" on the assumption that the angle of the ground is "0", it is determined that the optical axis of the image capturing unit **110** is parallel to the ground **220**. When the tilt sensing unit **120** is installed parallel to (i.e., in front of the optical axis of the image capturing unit **110**, the tilt sensed by the tilt sensing unit **120** may be considered to be the tilt of the ground reference camera. Accordingly, as illustrated in FIG. **5**, it is determined that if the calculated tilt "$\Theta_1+\Theta_2$" has a negative value, the image capturing unit **110** is located over the object **300**, while if the calculated tilt "$\Theta_1+\Theta_2$" has a positive value, the image capturing unit **110** is located below the object **300**.

[**0049**] In the description of the present embodiment that follows, the object is a user's face, and an image of the user's face, which is desired by the user, is an image captured by the image capturing unit **110** that is located over the user's face. Also, the optical axis **111** of the image capturing unit **110** points to the user. However, it is to be understood that these are merely a non-limiting examples. Indeed, the optical axis **111** of the image capturing unit **110** may also point to an object other than the user. Accordingly, the position of the image capturing unit **110**, which is determined depend-

ing on "$\Theta_1+\Theta_2$" may be changed by the optical axis **111** of the image capturing unit **110**.

[**0050**] If the user's face is captured by the image capturing unit **110** that is below the user's face, i.e., if "$\Theta_1+\Theta_2$" has a positive value, the captured image is not the image desired by the user. In this case, the compensation unit **140** performs compensation of the captured image. Specifically, the compensation unit **140** determines whether the image desired by the user has been captured by comparing the tilt predetermined by the user or by default with the tilt calculated by the tilt determining unit **130**, and then it determines whether to perform the compensation in accordance with the result of judgment. If the calculated tilt is determined to be an angle that causes a perspective distortion of the facial image that is not desired by the user, the compensation unit **140** compensates for the generated distortion.

[**0051**] Specifically, if the image capturing unit **110** that is located below the user's face has captured the user's facial image, as illustrated in FIG. **6**A, the captured image may be a distorted image in which the chin part 310 appears to be emphasized and the forehead part **320** appears to be narrowed. Accordingly, the compensation unit **140** performs perspective compensation on the image as illustrated in FIG. **6**A to provide a compensated image as illustrated in FIG. **6**B. In the compensated image of FIG. **6**B, the chin part **310** is reduced and the forehead part **320** is enlarged, in comparison to the distorted image of FIG. **6**A. For example, if it is assumed that the width of the chin part **310** of FIG. **6**A is "A" and the width of the chin part **310** of FIG. **6**B is "B", the relation of "A> B" is effected between them.

[**0052**] In the present embodiment, the image compensation may also be performed so as to decrease the shadowing effect of the image by compulsory flashing through a camera flash or heightening of the brightness of the image during the image capturing, in addition to the image modification as illustrated in FIGS. **6**A and **6**B.

[**0053**] More specifically, as illustrated in FIG. **7**, the compensation unit **140** can perform the image compensation in such a manner that the captured image is divided into lattices having the same spacing in horizontal and vertical directions on an xy-plane, and as y is increased from the original point (0, 0), the width W of the image and the lattice spacing d in the vertical direction is decreased. Accordingly, the compensation unit **140** can compensate the image captured through the image capturing unit **110** of FIG. **2** located below the user's face by widening the upper part of the image, narrowing the lower part of the image, and decreasing the lattice spacing d in the vertical direction, as illustrated in FIG. **8**. In other words, the compensation unit **140** performs the compensation in a manner that the captured image is divided into two specified regions having the same shape and size as those of the image before the image compensation is performed and having different positions in upward and downward directions, respectively. Accordingly, the size of the lower region of the image becomes smaller than the size of the upper region of the image.

[**0054**] If the region of the compensated image is different from the region on which the compensated image is displayed, i.e., if the region of the compensated image is smaller than or does not coincide with the display region, after the compensation of the captured image is performed by the compensation unit **140**, the compensation unit **140** can perform another process on the empty region in order to prevent the user from arousing psychological rejection against the empty region on which no image is displayed. For example, after the compensation according to FIGS. **7** and **8** is performed, the width of the lower part of the compensated image becomes narrower than the width of the upper part thereof. Accordingly, when the display region is in the form of a square, the width of the upper part of the compensated image becomes equal to the width of the display region, but the width of the lower part of the compensated image becomes smaller than the width of the display region, thereby causing empty regions occur on both lower sides of the compensated image.

[**0055**] In other words, as shown in FIG. **9**, the compensation unit can perform the process on an empty region **430** occurring due to the different sizes of the display region **410** and the compensated image region **420**.

[**0056**] In the present embodiment, in order to process the empty region **430**, the empty region **430** may be filled with pixel values constituting the empty region **430** of the image **440** before being compensated as shown in FIG. **10**A, the empty region is filled with pixel values of the compensated image existing at the closest position in the same row, on the basis of a specified pixel in the empty region as shown in FIG. **10**B, or a specified frame **450** (e.g., a picture frame) may be overlaid along the circumference of the display region **410** so that the empty region is hidden as shown in FIG. **10**C. In this case, the overlay and the pixel values can be used in the case where the width of the upper part of the compensated image is equal to the width of the display region **410**. If the captured image is quite larger than the display region **410**, the compensated image may be cut to match (i.e., cropped) the display region **410** after the captured image is compensated as shown in FIG. **10**D. In this case, it is considered that the resolution of the image captured by the image capturing unit **110** is higher than the resolution of the display region **410**, and the image region that is not displayed in the display region **410** is removed after the image compensation.

[**0057**] In addition to the methods of processing the empty region **430** as described above with reference to FIGS. **10**A to **10**D, a method of cutting out an unimpaired square region of the compensated image **420**, except for the empty region **430**, and enlarging cut region to a size enough to fill the display region **410** is contemplated.

[**0058**] As described above, the methods of processing the empty region **430** occurring due to the difference in size between the display region **410** and the compensated image **420** have been explained with reference to FIGS. **10**A to **10**D. However, the processing of the empty region is not limited thereto.

[**0059**] The compensation unit **140** can perform the image compensation using a geometric transform technique and a perspective transform technique that is a kind of geometric transform technique. However, it is to be understood that these are merely non-limiting examples to facilitate the understanding of the present embodiment, and other diverse techniques can be used for the image compensation.

[**0060**] For reference, the perspective transform refers to typical matrix-based image transform algorithm, and the image compensation may be performed according to Equa-

tion (1). In Equation (1), "x" and "y" denote specified points of an image before the image is compensated, "x'" and "y'" denote compensated points of the image, of which the positions have been changed by the perspective transform technique, and "w" denotes a weighted value.

[0061] In the present embodiment, values of m**00**, m**01**, m**02**, m**10**, m**11**, m**20**, and m**22**, which are transform matrix coefficients of Equation (1), are adjusted on the basis of the ground reference tilt of the image capturing unit **110**, which have been finally calculated by the tilt determining unit **130**.

$$\begin{bmatrix} x' \\ y' \\ w \end{bmatrix} = \begin{bmatrix} m00 & m01 & m02 \\ m10 & m11 & m12 \\ m20 & m21 & m22 \end{bmatrix} \begin{bmatrix} x \\ y \\ 1 \end{bmatrix} \quad \text{[Equation (1)]}$$

$$x' = \frac{m00x + m01y + m02}{m20x + m21y + m22}$$

$$y' = \frac{m10x + m11y + m12}{m20x + m21y + m22}$$

$$X = \frac{x'}{w},\ Y = \frac{y'}{w}$$

[0062] In Equation (1), "x" and "y" are coordinates of an image before the image is compensated, and "x'" and "y'" are coordinates of the compensated image. Also, it is exemplified that a 3×3 matrix is used in Equation (1), but is not limited thereto. A 2×2 matrix may also be used. In this case, a user can re-compensate the image compensated by the compensation unit **140** by changing a horizontal magnitude value m**00** and a vertical magnitude value m**11** that are parameters that the user can actually change through the user compensation unit **190**.

[0063] The transmission unit **170** transmits the image stored in the first storage unit **150** to another user or to an external device. The transmission unit **170** may transmit the image through a wired network such as, by way of non-limiting examples, an Ethernet and universal serial bus (USB), a mobile telephone network such as CDMA, TDMA, and GSM, and a wireless network such as Bluetooth and 802.11a/b/g. In this case, the transmission unit **170** may transmit the image stored in the first storage unit **150** with/without performing a specified process of the image. If a fast transmission is required, the transmission unit directly transmits the image stored in the first storage unit **150** without processing the image. In this case, the compensated image is stored in a buffer (not illustrated), and then transmitted to an outside.

[0064] FIG. **11** is a block diagram illustrating the construction of an image capturing apparatus with image compensation according to an embodiment of the present invention.

[0065] As illustrated in FIG. **11**, the image capturing apparatus **100** with image compensation, includes an image capturing unit **110** capturing the image of a specified object, a tilt storage unit **180** storing information about predetermined tilts of the image capturing unit **110**, a tilt determining unit **130** determining the tilt of the image capturing unit **110** in accordance with the stored tilt information, and a compensation unit **140** performing compensation of the captured image in accordance with the determined tilt.

[0066] Unlike the image capturing apparatus **100** with image compensation of FIG. **2**, the image capturing apparatus **100** with image compensation of FIG. **11** does not sense the tilt, but uses the predetermined tilt. In other words, the tilt information stored in the tilt storage unit **180** can be experimentally obtained from attitudes typically taken when the apparatus including the image capturing unit **110** is used. In addition, the tilt information stored in the tilt storage unit **180** may be stored in the manufacturing process or through a firmware upgrade later, but the storage of the tilt information is not limited thereto.

[0067] Constituent elements of FIG. **11** identified by the same reference numerals as those in FIG. **2** have the same functions, and thus duplicate explanations thereof are omitted.

[0068] However, unlike the tilt determining unit **130** of FIG. **2**, the tilt determining unit **130** of FIG. **11** determines the tilt of the image capturing unit **110** by using the tilt information stored in the tilt storage unit **180**.

[0069] As described above, with reference to FIGS. **2** and **11**, the compensation unit **140** may perform compensation of an image captured by the image capturing unit **110** in accordance with the tilt determined by the tilt determining unit **130**. However, a user may directly perform compensation according to the user's propensity and taste, after the compensation is performed by the compensation unit **140** can be further compensated as desired.

[0070] For this, the image capturing apparatus as illustrated in FIGS. **2** and **11** may further include a user compensation unit **190**, whereby a user can directly compensate an image as illustrated in FIGS. **12** and **13**. In this case, if the image capturing apparatus **100** is a mobile communication device, the user compensation unit **190** may be a button installed in the mobile communication device. Accordingly, the user can obtain an image suitable for the user by re-compensating the image once compensated by the compensation unit **140**. At this time, by changing the parameters m**00** and m**00** that are parameters of Equation (1) through the user compensation unit **140**, the image once compensated by the compensation unit **140**.

[0071] For example, if a user desires that the face of a person appears to be more nicely tapered in a state that m**00**=0.7 according to the tilt determined by the tilt determining unit **130**, on the assumption that the object is a person, he/she can change the state of m**00**=0.7 to m**00**=0.8 through the user compensation unit **190**. If a user uses the mobile communication device when the mobile communication device is located over the face in comparison to most users, the user can change m**11**=0.90, according to the tilt determined by the tilt determining unit **130**, to m**11**=0.8 through the user compensation unit **190**.

[0072] FIG. **14** is a flowchart illustrating a method of operating an image capturing apparatus with image compensation according to an embodiment of the present invention. This method is described with concurrent reference to the apparatus of FIG. **2** for ease of explanation only.

[0073] As illustrated in FIG. **14**, according to the method of operating the image capturing apparatus according to the present embodiment, the tilt sensing unit **120** senses the tilt of the device in which the image capturing unit **110** is installed (operation S**110**). In the description of the present

embodiment that follows, the image capturing unit **110** is a camera installed in the mobile communication device, and the tilt sensing unit **120** is installed in the main body **210** of the mobile communication terminal. Accordingly, the tilt sensing unit **120** senses the tilt of the main body **210** of the mobile communication device against the ground **220** and the sensed tilt is stored in the second storage unit **160**, as described above. However, it is to be understood that a camera is but one non-limiting example.

[**0074**] The tilt determining unit **130** calculates the tilt of the image capturing unit **110** in consideration of the angle between the tilt sensing unit **120** and the optical axis of the image capturing unit **110** (operation S**120**). The calculated tilt may be stored in the second storage unit **160** in the same manner as the sensed tilt.

[**0075**] Then, the compensation unit **140** determines whether the image has been captured through the image capturing unit **110** (operation S**130**). In other words, the compensation unit determines whether the image captured by the image capturing unit **110** through a user's manipulation has been stored in the first storage unit **150**.

[**0076**] In addition, the compensation unit **140** determines whether distortion has occurred in the captured image through the tilt of the image capturing unit **110** (operation S**140**). In the description of the present embodiment that follows, the user desires to capture the upper image of the object through the image capturing unit **110**, and thus the compensation unit **140** determines whether the image capturing unit **110** is located over the object or below the object on the basis of the tilt of the image capturing unit **110**.

[**0077**] If the image is not captured at a position desired by the user as a result of judgment, the compensation unit **140** performs compensation of the image stored in the first storage unit **150** by using the perspective transform technique and so on (operation S**150**). For example, if the image is captured at a position that is below the user's face as illustrated in FIG. **6**A, although the user desires to capture the image at a position that is over the user's face, the compensation unit performs the compensation of the image stored in the first storage unit **150**, as illustrated in FIG. **6**A, using the perspective transform technique.

[**0078**] If the image compensation is completed, the compensation unit **140** stores the compensated image in the first storage unit **150** (operation S**160**).

[**0079**] Thereafter, the user can contemplate communications by setting the display screen of the user's mobile communication device or transmitting the user's image to another user.

[**0080**] At this time, if the user desires to re-compensate the image having been compensated by the compensation unit **140** (operation S**170**), he/she can re-compensate the image through the user compensation unit **190** (operation S**180**).

[**0081**] FIG. **15** is a flowchart illustrating a method of operating an image capturing apparatus with image compensation according to an embodiment of the present invention. This method is described with concurrent reference to the apparatus of FIG. **11** for ease of explanation only.

[**0082**] As illustrated in FIG. **15**, according to the video telephony device with image compensation according to the present embodiment, the tilt determining unit determines the tilt of the image capturing unit **110** with reference to the tilt information stored in the tilt storage unit **180** (operation S**210**).

[**0083**] Then, the compensation unit **140** determines whether the image is captured through the image capturing unit **110** (operation S**220**). In other words, the compensation unit **140** determines whether the image captured by the image capturing unit **110** through the user's manipulation is stored in the first storage unit **150**.

[**0084**] If the image of the object is captured by the image capturing unit **110**, the compensation unit **140** performs compensation of the captured image with reference to the determined tilt (operation S**230**).

[**0085**] If the compensation of the image is completed, the compensation unit **140** re-stores the compensated imaged in the first storage unit **150** (operation S**240**).

[**0086**] At this time, if the user desires to re-compensate the image having been compensated by the compensation unit **140** (operation S**250**), he/she can re-compensate the image stored in the compensation unit **140** through the user compensation unit **190** (operation S**260**).

[**0087**] In the image capturing apparatus with image compensation and the method of operating the image capturing apparatus according to the above described embodiments of the present invention, the term "unit", as used herein, means, but is not limited to, a software or hardware component, such as a Field Programmable Gate Array (FPGA) or Application Specific Integrated Circuit (ASIC), which performs certain tasks. A unit may advantageously be configured to reside on the addressable storage medium and configured to execute on one or more processors. Thus, a unit may include, by way of example, components, such as software components, object-oriented software components, class components and task components, processes, functions, attributes, procedures, subroutines, segments of program code, drivers, firmware, microcode, circuitry, data, databases, data structures, tables, arrays, and variables. The functionality provided for in the components and units may be combined into fewer components and units or further separated into additional components and units.

[**0088**] In the foregoing descriptions of embodiments of the present invention, reference was made to accompanying drawings illustrating block diagrams and flowcharts. It is to be understood that each block of the flowchart illustrations, and combinations of blocks in the flowchart illustrations, can be implemented by computer program instructions. These computer program instructions can be provided to a processor of a general purpose computer, special purpose computer, or other programmable data processing apparatus to produce a machine, such that the instructions, which execute via the processor of the computer or other programmable data processing apparatus, create means for implementing the functions specified in the flowchart block or blocks.

[**0089**] These computer program instructions may also be stored in a computer usable or computer-readable memory that can direct a computer or other programmable data processing apparatus to function in a particular manner, such that the instructions stored in the computer usable or computer-readable memory produce an article of manufacture

including instruction means that implement the function specified in the flowchart block or blocks.

[0090] The computer program instructions may also be loaded onto a computer or other programmable data processing apparatus to cause a series of operational processes to be performed on the computer or other programmable apparatus to produce a computer implemented process such that the instructions that execute on the computer or other programmable apparatus provide operations for implementing the functions specified in the flowchart block or blocks.

[0091] Also, each block of the flowchart illustrations may represent a module, segment, or portion of code, which comprises one or more executable instructions for implementing the specified logical function(s). It should also be noted that in some alternative implementations, the functions noted in the blocks may occur in an order that differs from those described and/or illustrated. For example, two blocks shown in succession may in fact be executed substantially concurrently or the blocks may sometimes be executed in the reverse order, depending upon the functionality involved.

[0092] According to the image capturing apparatus with image compensation and the method of operating the image capturing apparatus according to the above-described embodiments of the present invention, the distortion of a user's facial image occurring due to the capturing angle of the camera is compensated for even if the user keeps an unaffected posture during the video telephony through a mobile communication device, the psychological rejection to the facial image that is seen by an opposite party can be minimized to promote the spread of video photography devices.

[0093] Although a few embodiments of the present invention have been shown and described, the present invention is not limited to the described embodiments. Instead, it would be appreciated by those skilled in the art that changes may be made to these embodiments without departing from the principles and spirit of the invention, the scope of which is defined by the claims and their equivalents.

What is claimed is:

1. An image capturing apparatus comprising:

an image capturing unit capturing an image of an object;

a tilt determining unit determining a tilt of the image capturing unit relative to the object; and

a compensation unit compensating the captured image in accordance with the determined tilt.

2. The image capturing apparatus of claim 1, wherein the object is a person.

3. The image capturing apparatus of claim 1, wherein the image capturing unit captures the image of the object from a position below the object.

4. The image capturing apparatus of claim 1, further comprising a tilt sensing unit sensing a tilt of a device in which the image capturing unit is installed.

5. The image capturing apparatus of claim 4, wherein the tilt sensing unit senses the tilt between a person and the image capturing unit from a relative position between facial feature points of the person, using the image captured by the image capturing unit.

6. The image capturing apparatus of claim 4, further comprising:

a first storage unit storing the image captured by the image capturing unit; and

a second storage unit storing information about the sensed tilt and the determined tilt.

7. The image capturing apparatus of claim 4, wherein the tilt sensing unit senses the tilt of the device, in which the image capturing device is installed, relative to a plane, which is perpendicular to a direction of gravity, using an inertial sensor.

8. The image capturing apparatus of claim 1, further comprising a tilt storage unit storing predetermined tilts of the image capturing unit relative to the object.

9. The image capturing apparatus of claim 8, the tilt determining unit selects one of the stored tilts as the tilt of the image capturing unit.

10. The image capturing apparatus of claim 1, wherein the compensation unit determines whether to perform the compensation of the captured image and a level of compensation in accordance with the tilt determined by the tilt determining unit.

11. The image capturing apparatus of claim 10, wherein the compensation unit compensates the captured image through a geometric transform technique.

12. The image capturing apparatus of claim 11, wherein the compensation unit adjusts transform matrix coefficients used for the image compensation in accordance with the determined tilt.

13. The image capturing apparatus of claim 11, wherein the compensation unit uses a perspective transform technique among the geometric transform technique of the captured image.

14. The image capturing apparatus of claim 11, wherein, when the captured image is transformed through the geometric transform technique, the compensation unit performs compensation so that two specified regions, which have a same shape and area as those of the image before being compensated and have different positions in upward and downward directions, respectively, are determined, and an area of a region at a relatively low position is smaller than an area of a region at a relatively high position.

15. The image capturing apparatus of claim 1, further comprising a user compensation unit adjusting a degree of the image compensation performed in the compensation unit by receiving a user's change of the determined tilt or a compensation level determined by the compensation unit.

16. The image capturing apparatus of claim 11, further comprising a display unit displaying the image compensated by the compensation unit,

wherein, when the region of the compensated image does not coincide with a display region of the display unit, and an empty region having no image is displayed, the compensation unit performs a process of the empty region.

17. The image capturing apparatus of claim 16, wherein the compensation unit fills the empty region with image pixel values constituting the corresponding region in the image before being compensated.

18. The image capturing apparatus of claim 16, wherein the compensation unit fills the empty region with pixel

values of the compensated image existing at the closest position in a same row, on a basis of a specified pixel in the empty region.

19. The image capturing apparatus of claim 16, wherein the compensation unit overlays a specified frame over a circumference of the display region so as to hide the empty region.

20. The image capturing apparatus of claim 16, wherein, when the image capturing unit captures an image that is larger than the display region, the compensation unit compensates the image and then crops the compensated image to match the display region.

21. The image capturing apparatus of claim 16, wherein the compensation unit cuts out the region, except for the empty region from the compensated image, in the form of a square, and then enlarges the cut region to a size enough to fill the display region.

22. An image compensation method, the method comprising:

capturing an image of an object;

determining a tilt of an image capturing unit relative to the object; and

compensating the captured image in accordance with the determined tilt.

23. The method of claim 22, wherein the object is a person.

24. The method of claim 22, wherein the capturing comprises capturing the image of the object from a position below the object.

25. The method of claim 22, further comprising sensing the tilt of a device in which an image capturing module, which performs the capturing, is installed.

26. The method of claim 25, wherein, in the sensing, a tilt between a person and the image capturing unit from a relative position between facial feature points of the person is sensed, using the captured image.

27. The method of claim 25, further comprising:

storing the captured image; and

storing information about the sensed tilt and the determined tilt.

28. The method of claim 25, wherein, in the sensing, the tilt of the device, in which the image capturing module is installed, relative to a plane, which is perpendicular to a direction of gravity is sensed, using an inertial sensor.

29. The method of claim 22, wherein the determining comprises determining the tilt of the image capturing module with reference to one of plural pre-stored tilts.

30. The method of claim 22, wherein the compensating comprises determining whether to perform the compensation of the captured image and a level of compensation in accordance with the determined tilt.

31. The method of claim 30, wherein, in the compensating, the captured image is compensated through a geometric transform technique.

32. The method of claim 31, wherein the compensating comprises adjusting transform matrix coefficients used for the image compensation in accordance with the determined tilt.

33. The method of claim 31, wherein, in the compensating, the captured image is compensated through a perspective transform technique among the geometric transform technique of the captured image.

34. The method of claim 31, wherein, in the compensating, when the captured image is compensated through the geometric transform technique, the compensating is performed so that two specified regions, which have a same shape and area as those of the image before being compensated and have different positions in upward and downward directions, respectively, are determined, and an area of a region at a relatively low position is smaller than an area of a region at a relatively high position.

35. The method of claim 22, further comprising adjusting a degree of the image compensation by enabling a user to change the determined tilt or a determined compensation level.

36. The method of claim 31, wherein, when the region of the compensated image does not coincide with a display region on which the compensated image is displayed, and thus an empty region having no image is displayed, the compensating comprises performing a process on the empty region.

37. The method of claim 36, wherein, in the compensating, the empty region is filled with image pixel values constituting the corresponding region in the image before being compensated.

38. The method of claim 36, wherein, in the compensating, the empty region is filled with pixel values of the compensated image existing at the closet position in a same row, on a basis of a specified pixel in the empty region.

39. The method of claim 36, wherein the compensating comprises overlaying a specified frame over a circumference of the display region so as to hide the empty region.

40. The method of claim 36, wherein, when an image that is larger than the display region is captured, the compensating comprises compensating the image and then cropping the compensated image to match the display region.

41. The method of claim 36, wherein the compensating comprises cutting out the region, except for the empty region from the compensated image, in the form of a square, and then enlarging the cut region to a size enough to fill the display region.

42. A video telephony apparatus comprising:

an image capturing unit in a device, having an optical axis, and movable relative to a main body of the device;

a tilt sensing unit in the main body sensing a tilt of the device relative to horizontal;

a tilt determining unit determining a tilt of the image capturing unit based on an angle between a plane in the main body and the optical axis; and

a compensation unit compensating for distortion of an image captured by the image capturing unit, based on the calculated tilt.

43. The apparatus of claim 42, wherein the compensation unit compensates for distortion of the captured image by judging whether the captured image exhibits perspective distortion and compensates for the distortion by using perspective compensation.

44. An image compensation method, comprising:

sensing a first tilt angle which is an angle of a device in which an image capturing unit is installed relative to a horizontal plane;

calculating a second tilt angle which is an angle of the image capturing unit relative to the device;

capturing an image of an object and determining, based on the first and the second tilt angles, whether the image capturing unit is above the object, below the object or level with the object; and

compensating for image distortion of the captured image when the image capturing unit is determined to be above or below the object.

45. A computer-readable storage medium encoded with processing instructions for causing a processor to execute the method of claim 22.

46. A computer-readable storage medium encoded with processing instructions for causing a processor to execute the method of claim 44.

* * * * *