US007085959B2

(12) **United States Patent**
Safford

(10) **Patent No.: US 7,085,959 B2**
(45) **Date of Patent: Aug. 1, 2006**

(54) **METHOD AND APPARATUS FOR RECOVERY FROM LOSS OF LOCK STEP**

(75) Inventor: **Kevin David Safford**, Fort Collins, CO (US)

(73) Assignee: **Hewlett-Packard Development Company, L.P.**, Houston, TX (US)

(*) Notice: Subject to any disclaimer, the term of this patent is extended or adjusted under 35 U.S.C. 154(b) by 651 days.

(21) Appl. No.: **10/187,833**

(22) Filed: **Jul. 3, 2002**

(65) **Prior Publication Data**

US 2004/0006722 A1 Jan. 8, 2004

(51) **Int. Cl.**
G06F 11/00 (2006.01)

(52) **U.S. Cl.** **714/11**

(58) **Field of Classification Search** 714/10, 714/11, 12, 13

See application file for complete search history.

(56) **References Cited**

U.S. PATENT DOCUMENTS

4,589,066	A	5/1986	Lam et al.	
5,732,209	A *	3/1998	Vigil et al.	714/30
6,065,135	A	5/2000	Marshall et al.	
6,148,348	A	11/2000	Garnett et al.	
6,263,452	B1	7/2001	Jewett et al.	
6,378,021	B1 *	4/2002	Okazawa et al.	710/317
6,615,366	B1 *	9/2003	Grochowski et al.	714/10
6,751,749	B1 *	6/2004	Hofstee et al.	714/11
6,772,368	B1 *	8/2004	Dhong et al.	714/11
2002/0073357	A1 *	6/2002	Dhong et al.	714/19
2002/0144177	A1 *	10/2002	Kondo et al.	714/13
2003/0126498	A1 *	7/2003	Bigbee et al.	714/10
2004/0019771	A1 *	1/2004	Quach	712/229
2004/0153731	A1 *	8/2004	Aino et al.	714/6
2004/0153857	A1 *	8/2004	Yamazaki et al.	714/43

OTHER PUBLICATIONS

Tamir, Yuval, "Self-Checking Self-Repairing Computer Nodes Using the Mirror Processor", IEEE Journal Of Solid-State Circuits, vol. 27. No. 1, Jan. 1992.

Search Report issued on Dec. 30, 2003 in counterpart foreign application in GB under application No. 315295.6.

* cited by examiner

Primary Examiner—Bryce P. Bonzo

(57) **ABSTRACT**

An apparatus, operating on an advanced multi-core processor architecture, and a corresponding method, are used to enhance recovery from loss of lock step in a multi-processor computer system. The apparatus for recovery from loss of lock step includes multiple processor units operating in the computer system, each of the processor units having at least two processor units operating in lock step, and at least one idle processor unit operating in lock step; and a controller coupled to the two processor units operating in lock step and the idle processor unit. The controller includes mechanisms for copying an architected state of each of the two lock step processor units to the idle processor unit.

14 Claims, 4 Drawing Sheets

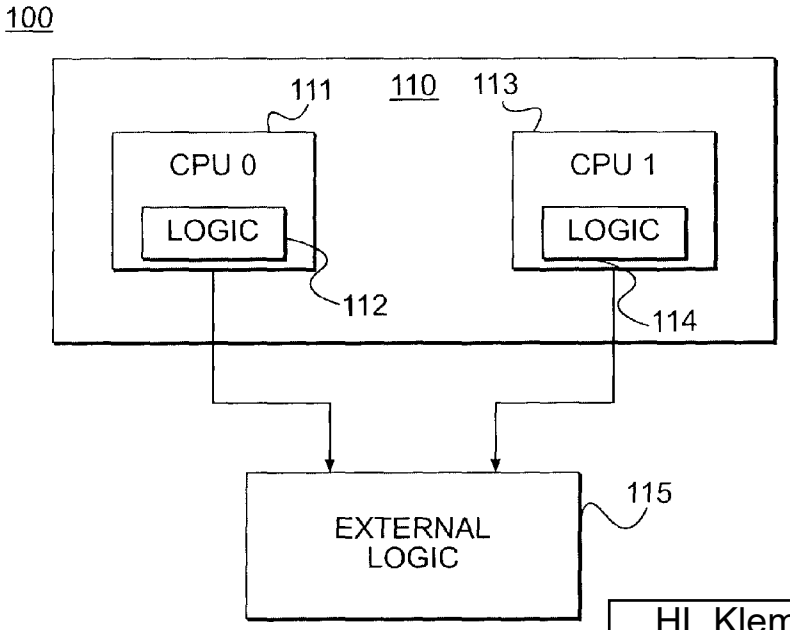

HL Klemove v. Foras Techs.
IPR2024-00813
Exhibit 1008

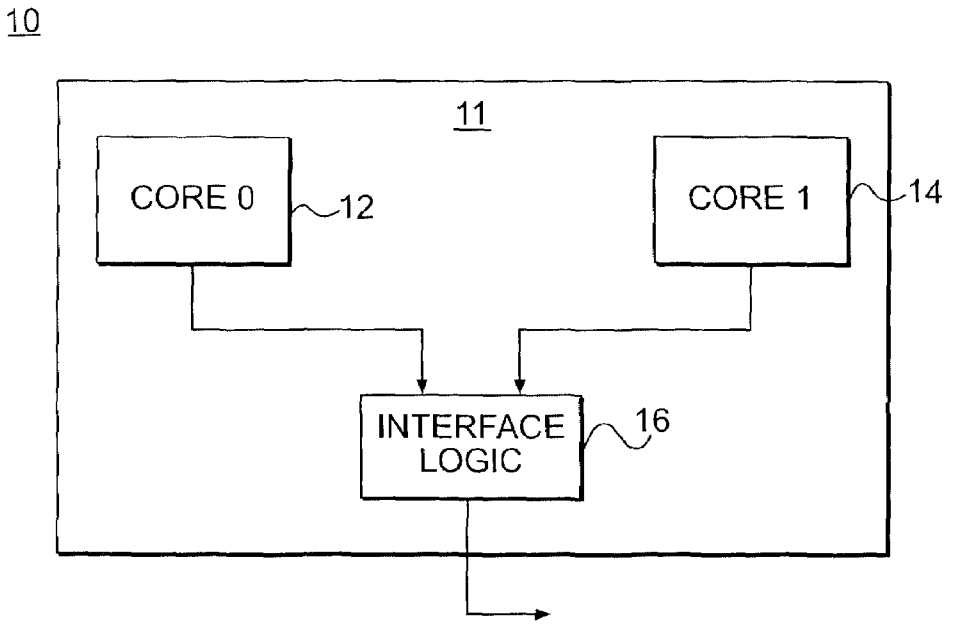

FIG. 1A
PRIOR ART

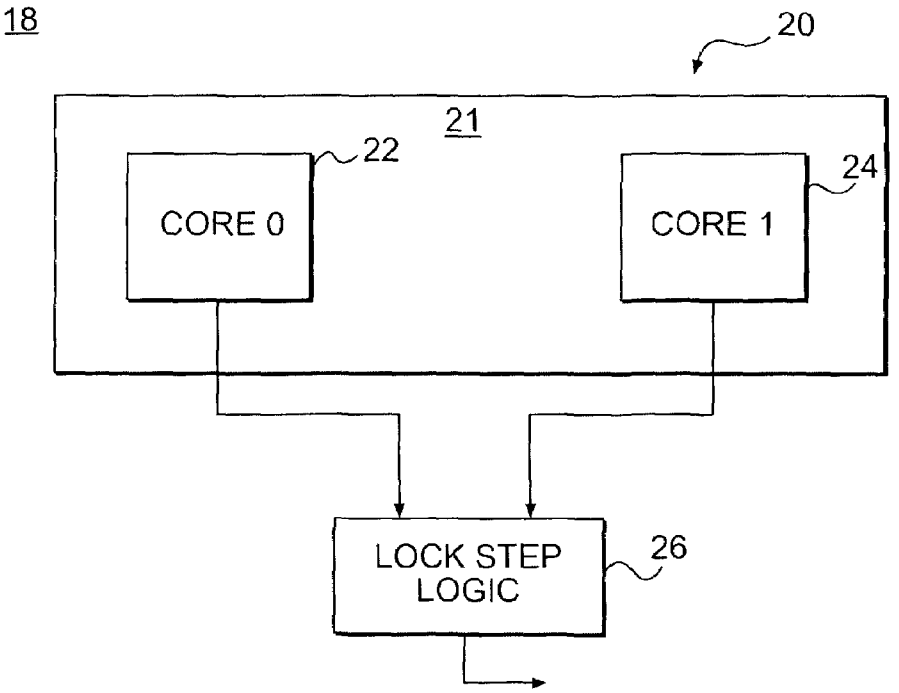

FIG. 1B
PRIOR ART

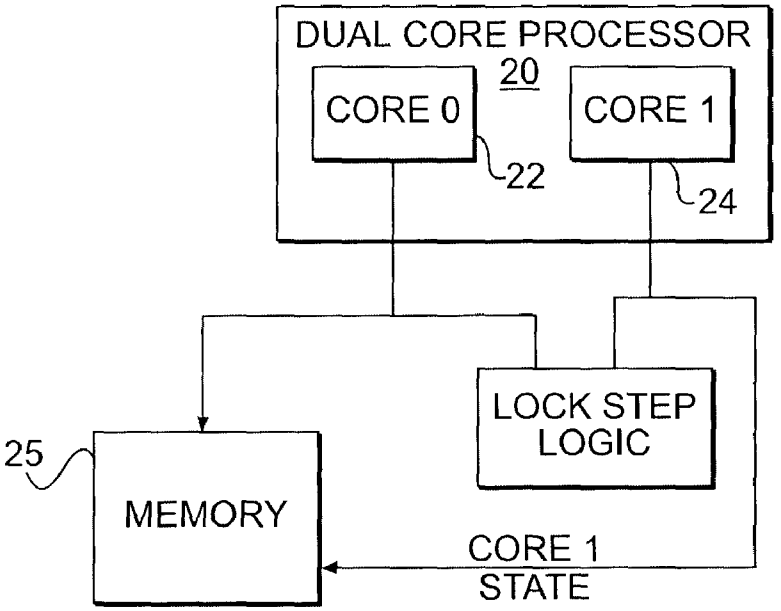

FIG. 1C
PRIOR ART

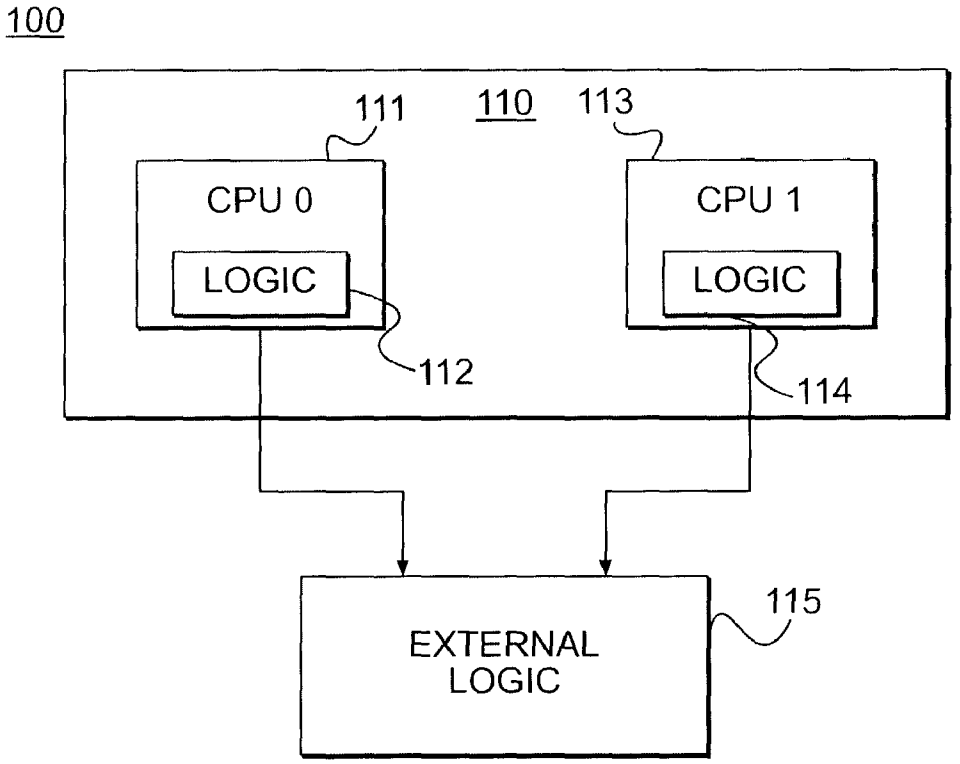

FIG. 2

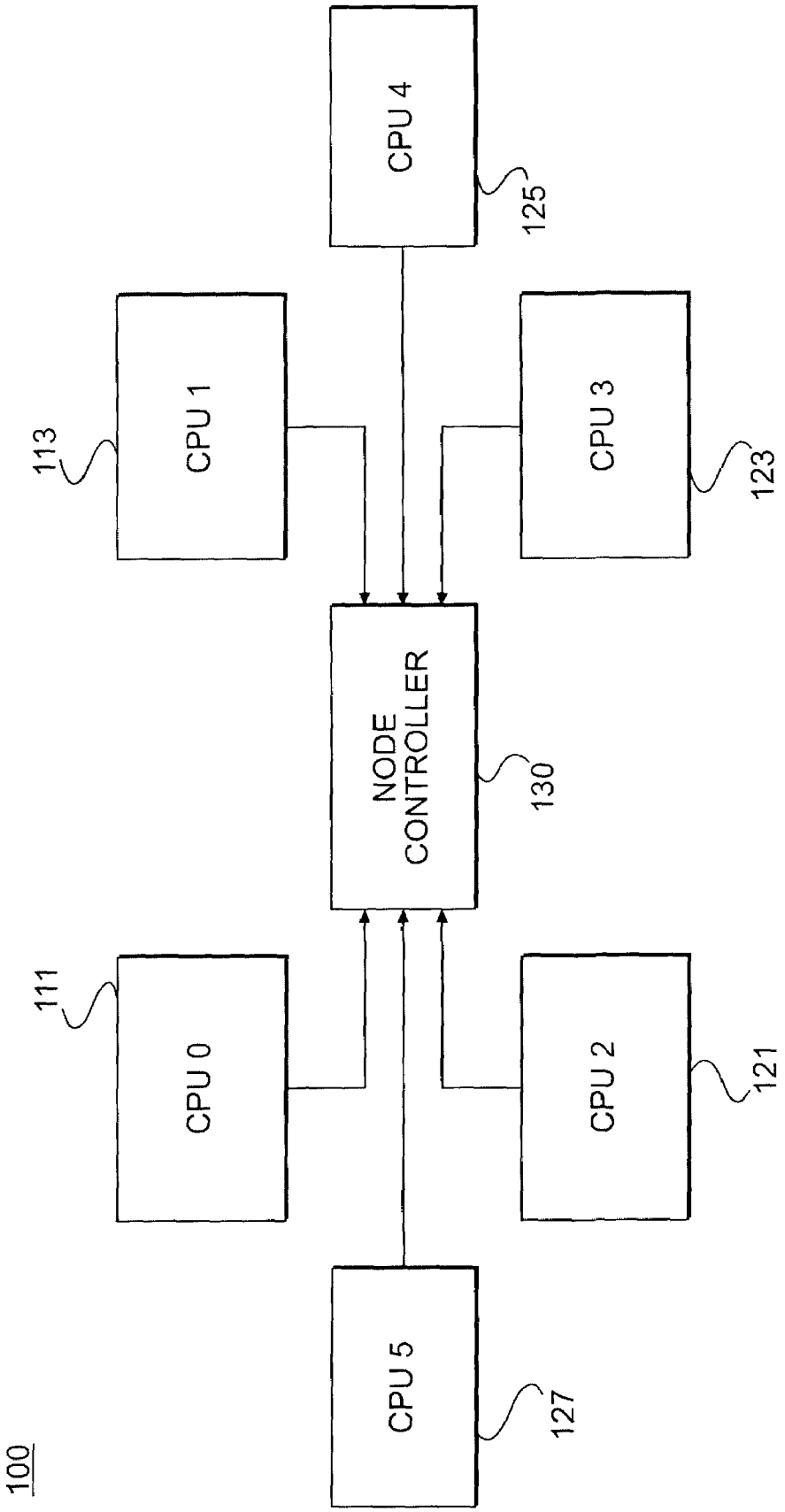
100
CPU 0
111
CPU 1
113
CPU 2
121
CPU 3
123
CPU 4
125
CPU 5
127
NODE CONTROLLER
130

FIG. 3

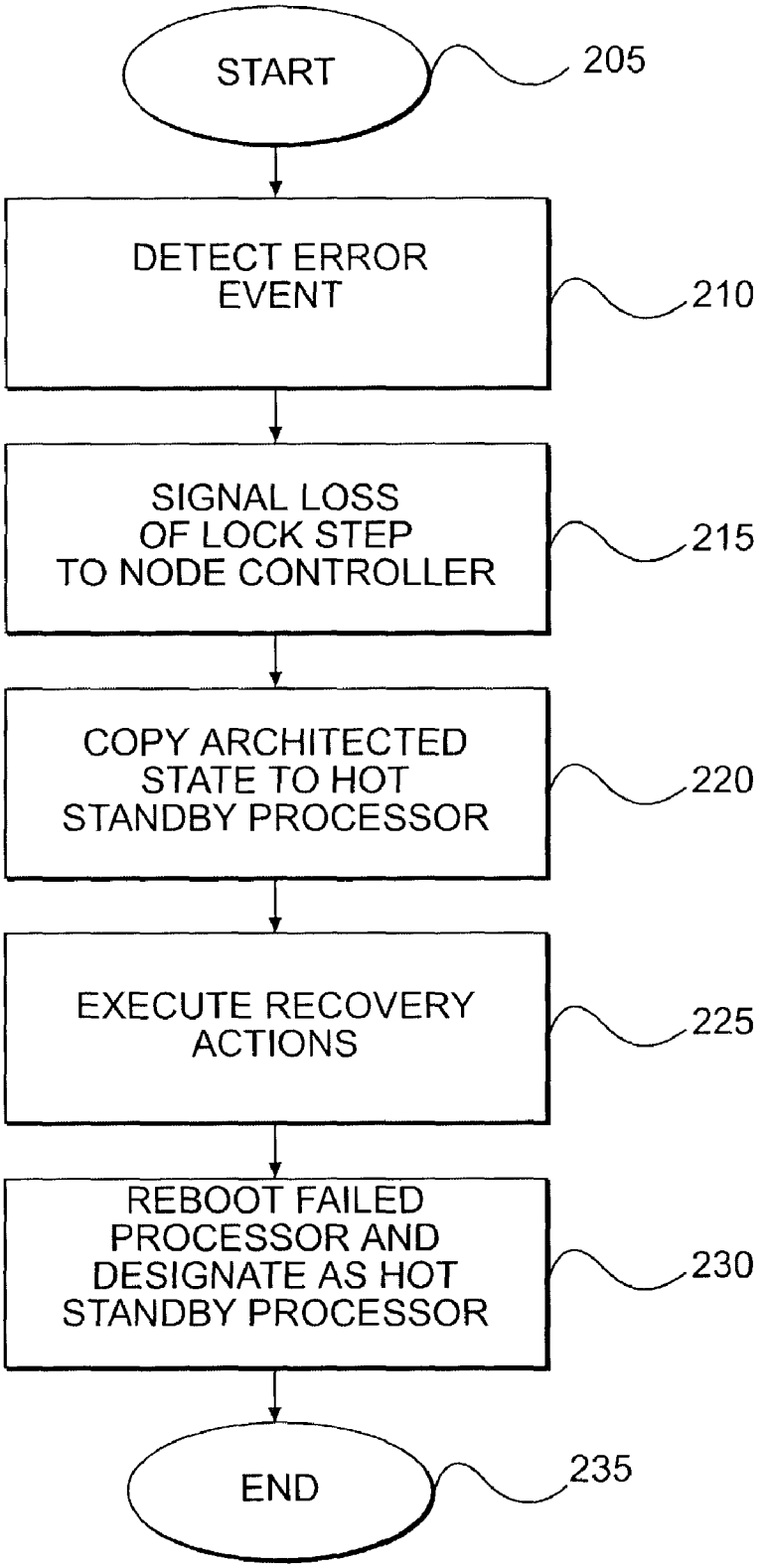
START
205
DETECT ERROR EVENT
210
SIGNAL LOSS OF LOCK STEP TO NODE CONTROLLER
215
COPY ARCHITECTED STATE TO HOT STANDBY PROCESSOR
220
EXECUTE RECOVERY ACTIONS
225
REBOOT FAILED PROCESSOR AND DESIGNATE AS HOT STANDBY PROCESSOR
230
END
235

FIG. 4

METHOD AND APPARATUS FOR RECOVERY FROM LOSS OF LOCK STEP

TECHNICAL FIELD

The technical field is computer systems employing lock stepped microprocessors.

BACKGROUND

Advanced computer architectures may employ multiple microprocessors. Some advanced computer architectures may employ multiple microprocessors on one silicon chip. In a typical application, two microprocessors may be implemented on a single silicon chip, and the implementation may be referred to as a dual core processor. Two or more of the multiple microprocessors may operate in a lock step mode, meaning that each of the lock stepped microprocessors process the same code sequences, and should, therefore, produce identical outputs. FIG. **1**A illustrates a typical implementation of a dual core processor. A dual core processor **10** includes a silicon chip **11** having microprocessor core **12** (core **0**) and microprocessor core **14** (core **1**). The microprocessor cores **12** and **14** are coupled to an interface logic **16** that monitors external communications from the microprocessor cores **12** and **14**. In the dual core processor **10**, the microprocessor cores **12** and **14** operate as independent entities. While the dual core processor **10** has advantages in terms of size and processing speed, the reliability of the dual core processor **10** is not significantly better than that of two single core processors.

To enhance reliability, the dual core processor, or other multiple microprocessor architected computer systems, may employ lock step features. FIG. **1**B is a diagram of a prior art dual core processor that uses lock step techniques to improve overall reliability. In FIG. **1**B, a computer system **18** includes a dual core processor **20** having a single silicon chip **21**, on which are implemented microprocessor core **22** and microprocessor core **24**. To employ lock step, each of the microprocessor cores **22** and **24** process the same code streams. To ensure reliable operation of the dual core processor **20**, each of the microprocessors **22** and **24** may operate in "lock step." An event that causes a loss of lock step can occur on either or both of the microprocessor cores **22** and **24**. An example of such an event is a data cache error. A loss of lock step, if not promptly corrected, may cause the computer system **18** to "crash." That is, a failure of one microprocessor core may halt processing of the dual core processor **20**, and the computer system **18**, even if the other microprocessor core does not encounter an error.

To detect a loss of lock step, a lock step logic **26**, which may be external to the chip **21**, compares outputs from the microprocessor cores **22** and **24**. A difference in processing detected by the lock step logic **26** is by definition a loss of lock step. A drawback to the dual core processor architecture shown in FIG. **1**B is that the logic to determine loss of lock step is external to the chip. This configuration imposes delays in determining loss of lock step, and requires additional architectural features.

The dual core processor **20** also makes recovery from a loss of lock step difficult and time-consuming. FIG. **1**C illustrates a current methodology for recovering from a loss of lock step. In FIG. **1**C, the dual core processor **20** is shown coupled to memory **25**. Should the dual core processor **20** suffer a loss of lock step, recovery may be initiated by the memory **25** saving the architected state of one of the microprocessors **22** and **24** (i.e., the microprocessor that is

considered "good"). Then, both microprocessors **22** and **24** are reset and reinitialized. Finally, the architected states of each of the microprocessors **22** and **24** is copied from the memory **25** into the microprocessors **22** and **24**, respectively. This prior art methodology for recovery from a loss of lock step makes the microprocessors **22** and **24** unavailable for an amount of time. If the amount of time required for recovery is too long, the computer system **18** employing the dual core processor **20** may "crash."

SUMMARY

An apparatus, operating on an advanced multi-core processor architecture, and a corresponding method, are used to enhance recovery from loss of lock step in a computer system. In an embodiment, the apparatus for recovery from loss of lock step comprises a plurality of processor units operating in the computer system, each of the processor units comprising at least two processor units operating in lock step, and at least one idle processor unit operating in lock step; and a controller coupled to at least the at least two processor units operating in lock step and the at least one idle processor unit, the controller comprising means for copying an architected state of each of the at least two processor units to the idle processor unit.

The method comprises receiving a loss of lock step signal from a processor unit; receiving a notice from the processor unit experiencing the loss of lock step to take the processor unit off line; and moving an architected state of the processor unit experiencing the loss of lock step to a spare processor unit, wherein the spare processor unit becomes an active processor unit in the computer system.

DESCRIPTION OF THE DRAWINGS

The detailed description will refer to the following figures, in which like numbers refer to like elements, and in which:

FIG. **1**A is a diagram of a prior art dual-core processor;

FIG. **1**B is a diagram of a prior art dual-core processor employing lock step;

FIG. **1**C is a diagram illustrating prior art recovery from loss of lock step;

FIG. **2** is a diagram of a computer system that uses an improved, multi-core processor employing lock step processing;

FIG. **3** illustrates additional architectural features for use in recovery from loss of lock step for the computer system of FIG. **2**; and

FIG. **4** is a flowchart illustrating a process for recovery from loss of lock step in the computer system of FIG. **3**.

DETAILED DESCRIPTION

To improve reliability of processing assets, a computer system employs lock stepped processor cores that operate in a master/checker pair. Each of two processors in the pair processes the same code sequences, and the resulting outputs of the processors are compared by a logic circuit located near external interfaces of the two processors. Any difference in the processor outputs indicates the existence of an error. The logic circuit may then initiate a sequence of steps that halt operation of the two processors. FIG. **2** shows a computer system **100** that employs processors **111** (central processor unit (CPU) **0**) and **113** (CPU **1**), which, in an embodiment, may be located on a common silicon chip or substrate **110**. Alternatively, the processors **111** and **113** may

be implemented on separate substrates. The processors **111** and **113** may operate in an independent mode, or in a lock step mode. When operating in a lock step mode, the processors **111** and **113** will appear to the computer system **100** to be a single processor core, or a logical CPU **0**. The processor **111** may include error detection and signaling logic **112**, and the processor **113** may include error detection and signaling logic **114**. The error detection and signaling logic will be described later.

External logic circuit **115** monitors outputs of the processors **111** and **113** and may be used to detect any differences in the outputs. As noted above, such differences are indicative a potential error in at least one of the processors **111** and **113**. However, which of the processors **111** and **113** is subject to an error condition may not be known. On rare occasions, both the processors **111** and **113** may be subject to an error condition. Such an error condition may lead to a halt in processing of the processors **111** and **113** until the error can be corrected. In other words, any difference in the outputs causes a loss of lock step, and a halt to processing.

To improve availability of the processors assets of the computer system **100**, additional features, such as means for detecting and signaling occurrence of errors, may be incorporated into the computer system **100**. For example, the error detection and signaling logic **112** and **114** may be included in the processors **111** and **113**, respectively, or in other parts of the computer system **100**, to signal an impending loss of lock step. Using the impending loss of lock step signal, the computer system **100** may continue operating (processing) using one of the processors **111** and **113** that did not experience an error. In particular, certain events within either of the lock stepped processors **111** and **113** may be used by the processors **111** and **113**, respectively, to indicate the impending loss of lock step. As an example, and possibly due to completely random circumstances, a data cache error for a cache associated with the processor **111** may occur. Such an error can be completely corrected (i.e., the processor **111** does not need to be replaced), but will guarantee that the processors **111** and **113** will break lock step at some future time because the data cache error causes timing differences between the processors **111** and **113**. The processor **111** may detect the data cache error, and use the detection of this data cache error to signal the logic circuit **115** that the processor **111** is experiencing an error that will cause a loss of lock step, and that the processor **111** is "bad." The logic circuit **115** may then "turn off," thereby ending lock step operations, and processing may continue using the "good" processor **113**. At some future time, recovery from the loss of lock step (and correction of the data cache error) is executed to restore lock step operation of the processors **111** and **113**.

FIG. **3** illustrates further architectural details for recovery from loss of lock step in the computer system **100** of FIG. **2**. In FIG. **3**, the computer system **100** is shown with additional processors **121**, **123**, **125**, and **127**, as well as the processors **111** and **113**. The processors **111**, **113**, **121**, **123**, **125**, and **127** are coupled to node controller **130**. The processors operate as pairs when in lock step (i.e., the processors **111** and **113** are a first pair; the processors **121** and **123** are a second pair; and the processors **125** and **127** are a third pair). From the node controller's perspective, each pair of processors appears as a single (logical) processor. The processor pairs, or processor units, are coupled to a lockstep logic, such as the lockstep logic **115** shown in FIG. **2**, and the lockstep logic is then connected to the node controller **130**. The node controller **130** provides means for copying the architected state of a processor to another processor. In an embodiment, the node controller **130** has available at all time a current architected state of the processors to which the node controller **130** is coupled. In another embodiment, the node controller **130** simply provides means for communication among the processors **111**, **113**, **121**, **123**, **125**, and **127**. For example, the node controller **130** may store the architected state of the processors **111**, **113**, **121**, **123**, **125**, and **127**, either internally in the node controller **130**, or in another component of the computer system **100**. Alternatively, the node controller **130** may allow one processor (e.g., the processor **111**) to copy the architected state of the processor **111** to another processor (e.g., the processor **125**). In yet another alternative embodiment, the node controller **130** may allow a processor that has broken lock step to copy, as part of the process for recovering from loss of lock step, the architected state of the processor to the node controller **130**, which will in turn copy the architected state to a "hot standby" processor.

The six processors **111**, **113**, **121**, **123**, **125**, and **127** operate in lock step (i.e., are processing code sequences). For example, the processor **111** operates in lock step with the processor **113**, and the processor **121** operates in lock step with the processor **123** and the processor **125** operates in lock step with the processor **127**.

The processor **125** may be designated as a "hot standby," and is sitting idle in lock step mode with the processor **127**. Should one of the processors **111**, **113**, **121**, and **123** suffer an error, the hot standby processors **125**, **127** may be used to speed recovery from the resulting loss of lock step.

FIG. **4** is a flow chart illustrating a process **200** for recovery from a loss of lock step using the computer system **100** shown in FIG. **3**. The process **200** will be shown with an error condition in the first processor pair **111/113**. The operation **200** begins in block **205** with the system **100** operating in a normal lock step fashion. In block **210**, the processor **111** detects an error event that indicates an impending loss of lock step. In block **215**, the processor **111** signals the node controller **130** that the first processor pair **111/113** has broken lock step and that the first processor pair **111/113** should be taken "off-line." In block **220**, the node controller **130** copies the architected state of the first processor pair **111/113** to the hot standby processor pair **125/127**. In an embodiment, the architected state of the first processor pair **111/113** may be stored in the node controller **130**, and to facilitate recovery, the node controller **130** copies the stored state to the third processor pair **125/127**. Alternatively, the node controller **130** may copy the state of the first processor pair **111/113** directly from the processors **111** and **113** to the processors **125** and **127** without any intermediate storage of the architected state in the node controller **130**, or other component of the computer system **100**. The processor pair **125/127** then becomes the logical CPU **0** in the computer system **100**, and the computer system **100** operates without a hot standby processor pair. In block **225**, recovery actions are executed on the first processor pair **111/113** (e.g., all caches are flushed on the processors **111** and **113**). In block **230**, the node controller **130** "reboots" the processors **111** and **113**, and the processors **111** and **113** become the new "hot standby" processor pair on the system **100**. In block **235**, the operation **200** ends, with the computer system **100** operating the processors **121**, **123**, **125**, and **127** in lock step, and with the processors **111/113** idle and in hot standby.

The terms and descriptions used herein are set forth by way of illustration only and are not meant as limitations. Those skilled in the art will recognize that many variations are possible within the spirit and scope of the invention as

defined in the following claims, and there equivalents, in which all terms are to be understood in their broadest possible sense unless otherwise indicated.

The invention claimed is:

1. A method for recovery from loss of lock step in a computer system, comprising:

receiving a loss of lock step signal from a processor unit;

receiving a notice from the loss of lock step processor unit to take the loss of lock step processor unit off line; and

moving an architected state of the loss of lock step processor unit to a spare processor unit, wherein the spare processor unit becomes an active processor unit in the computer system.

2. The method of claim **1**, further comprising correcting an error condition in the loss of lock step processor unit.

3. The method of claim **2**, further comprising rebooting the loss of lock step processor unit, whereby the rebooted processor unit becomes a new spare processor unit.

4. The method of claim **1**, wherein moving the architected state comprises copying the architected state from a node controller that couples the loss of lock step processor unit and the spare processor unit.

5. The method of claim **1**, wherein moving the architected state comprises copying the architected state directly from the loss of lock step processor unit to the spare processor unit.

6. The method of claim **1**, wherein moving the architected state comprises:

copying the architected state from the loss of lock step processor unit to a node controller; and

copying the architected state from the node controller to the idle processor unit.

7. An apparatus to recover from a loss of lock step in a multiprocessor computer system, wherein two or more processor units operate in lock step, comprising:

in each of the two or more processor units operating in lock step:

means for detecting a loss of lock step initiating event, and

means for signaling an impending loss of lock step; and

means for moving an architected state of a processor unit having the loss of lock step initiating event to a spare processor unit, the spare processor unit operating idle in lock step.

8. The apparatus of claim **7**, further comprising means for taking the loss of lock step processor unit off line.

9. The apparatus of claim **8**, further comprising means for rebooting the loss of lock step processor unit, whereby the rebooted processor unit is designated as a new spare processor unit.

10. The apparatus of claim **7**, wherein the moving means comprises:

means for copying the architected state; and

means for storing the architected state.

11. The apparatus of claim **10**, wherein the means for storing the architected state comprises a node controller coupled to the two or more processor units and the spare processor unit.

12. The apparatus of claim **7**, wherein the moving means comprises means for copying the architected state directly from the loss of lock step processor unit to the spare processor unit.

13. A method for recovering from a loss of lock step operation in a multi-processor computer system, comprising:

detecting a loss of lock step initiating event in a processor;

signaling an impending loss of lock step;

copying an architected state of the loss of lock step processor to a spare processor; and

idling the loss of lock step processor.

14. The method of claim **13**, further comprising:

correcting the loss of lock step event in the loss of lock step processor; and rebooting the loss of lock step processor, whereby the rebooted processor is a new spare processor.

* * * * *