US 20020144177A1

(19) United States

(12) Patent Application Publication (10) Pub. No.: US 2002/0144177 A1

Kondo et al. (43) Pub. Date: Oct. 3, 2002

(54) SYSTEM RECOVERY FROM ERRORS FOR PROCESSOR AND ASSOCIATED COMPONENTS

(76) Inventors: **Thomas J. Kondo**, Santa Clara, CA (US); **James S. Klecka**, Georgetown, TX (US); **Robert L. Jardine**, Cupertino, CA (US); **William P. Bunton**, Pflugerville, TX (US); **Graham B. Stott**, Dublin, CA (US)

Correspondence Address:
OPPENHEIMER WOLFF & DONNELLY
P. O. BOX 10356
PALO ALTO, CA 94303 (US)

(21) Appl. No.: **10/061,435**

(22) Filed: **Jan. 31, 2002**

Related U.S. Application Data

(63) Continuation-in-part of application No. 09/209,635, filed on Dec. 10, 1998, now Pat. No. 6,393,582.

Publication Classification

(51) Int. Cl.[7] **G06F 11/16**

(52) U.S. Cl. **714/13**; 714/11

(57) **ABSTRACT**

A computer system includes a primary processor and a secondary processor running in lockstep. The lockstep may or may not be synchronous. Errors occurring in the primary processor or the secondary processor are reported to an error-handling module. If the error is a recoverable error, the state of one of the processors is saved and the processors are restarted using the saved state. In addition to the reporting of errors from the processors, cross checking of the operation of the processors is performed to detect a divergence in the operation of the processors. If the divergence is reported to be due to a recoverable error, the state of the one of the processors is saved and the processors are restarted using the saved state. Procedures are also disclosed to ensure that data corruption does not propagate onto an associated network, and to ensure that the system is not lost as a network resource during processor restart.

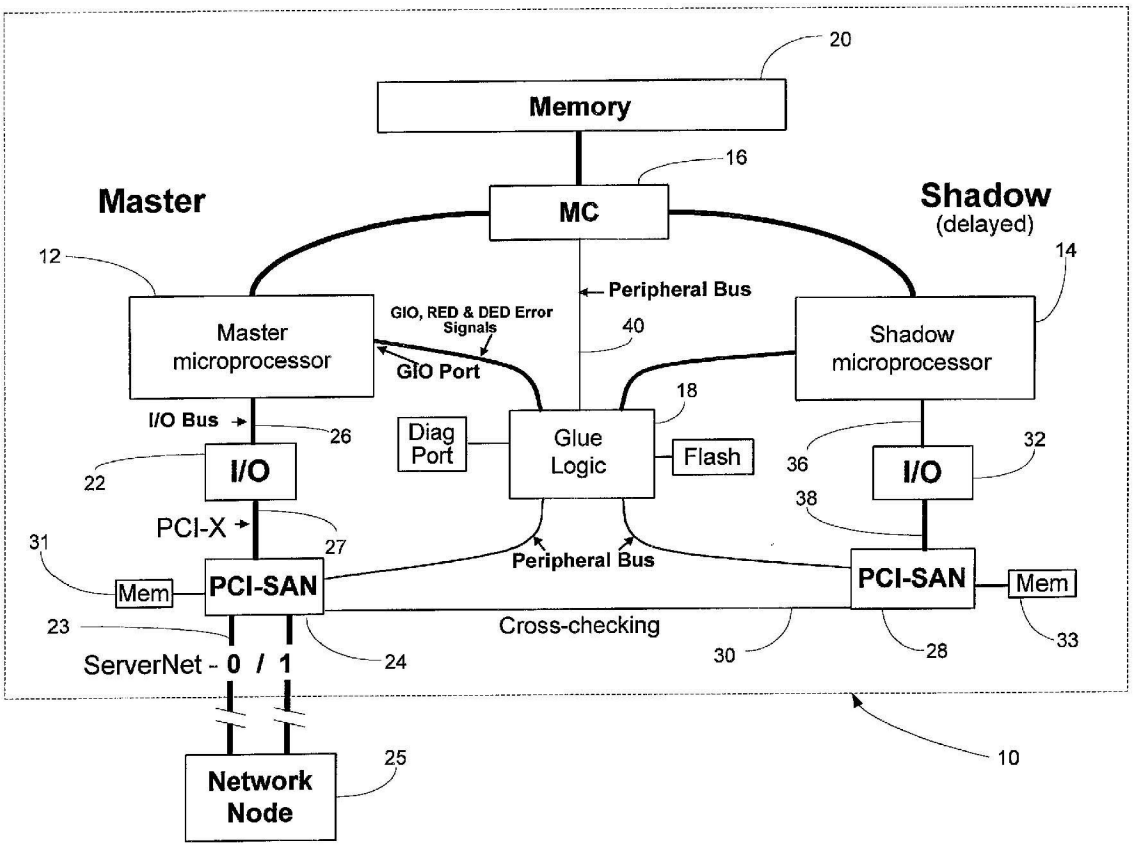

HL Klemove v. Foras Techs.
IPR2024-00813
Exhibit 1010

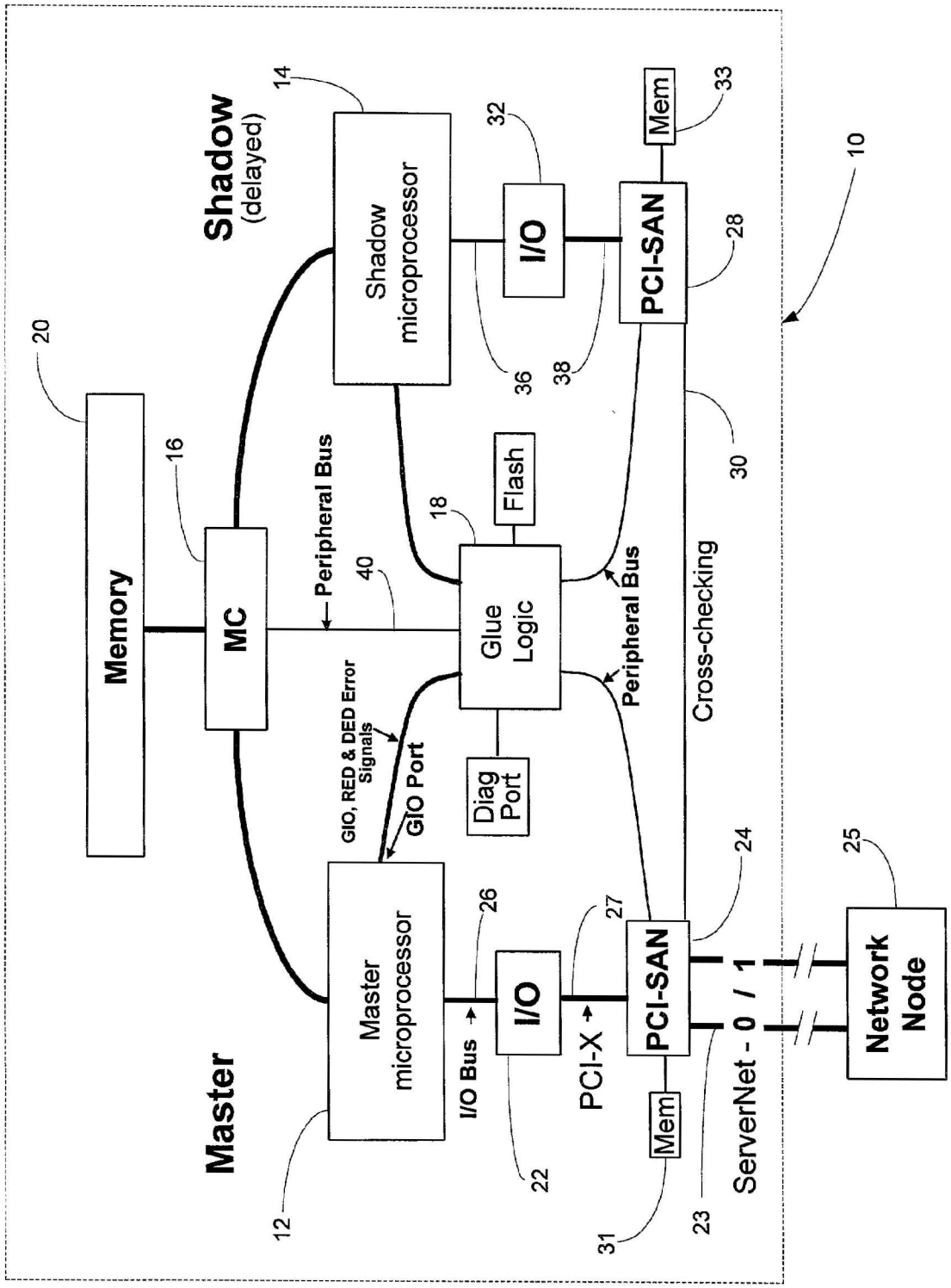
Memory
20
MC
16
Peripheral Bus
40
Shadow
(delayed)
Shadow microprocessor
14
Glue Logic
18
Flash
Diag Port
GIO, RED & DED Error Signals
GIO Port
Master
Master microprocessor
12
I/O Bus
26
I/O
22
PCI-X
27
PCI-SAN
24
Mem
31
I/O
32
36
38
PCI-SAN
28
Mem
33
Peripheral Bus
Cross-checking
30
10
ServerNet - 0 / 1
23
Network Node
25

FIG. 1

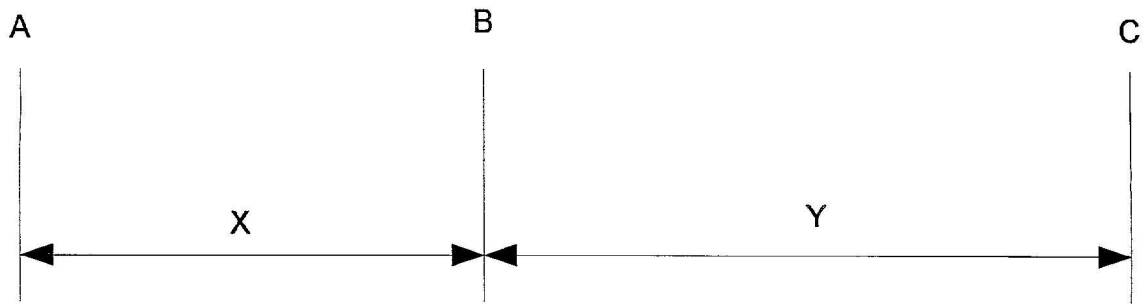

FIG. 2

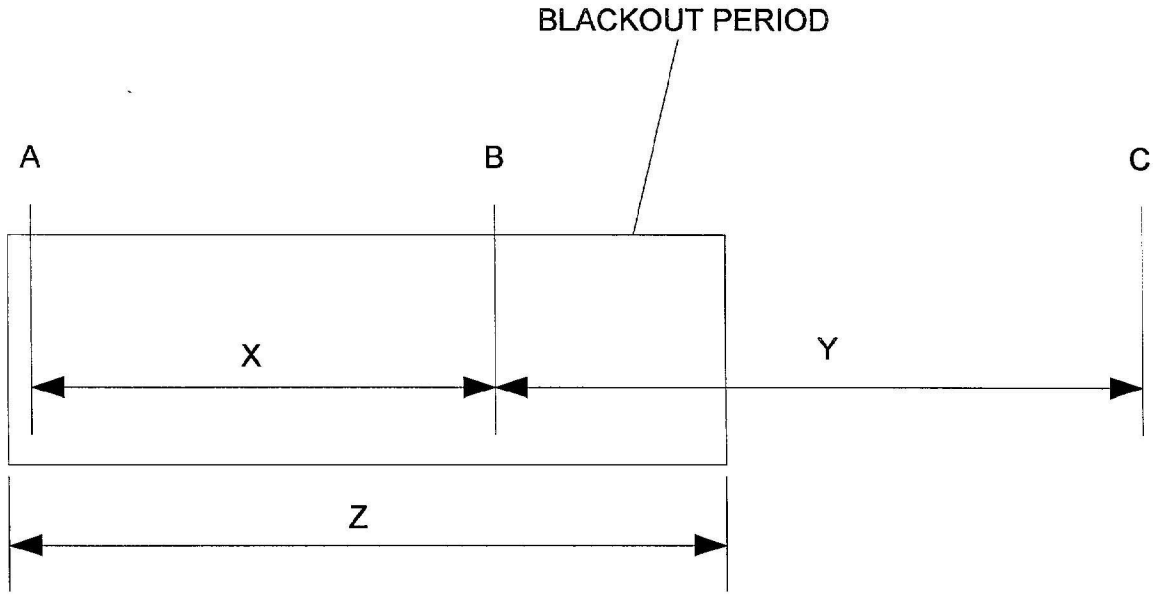

FIG. 3

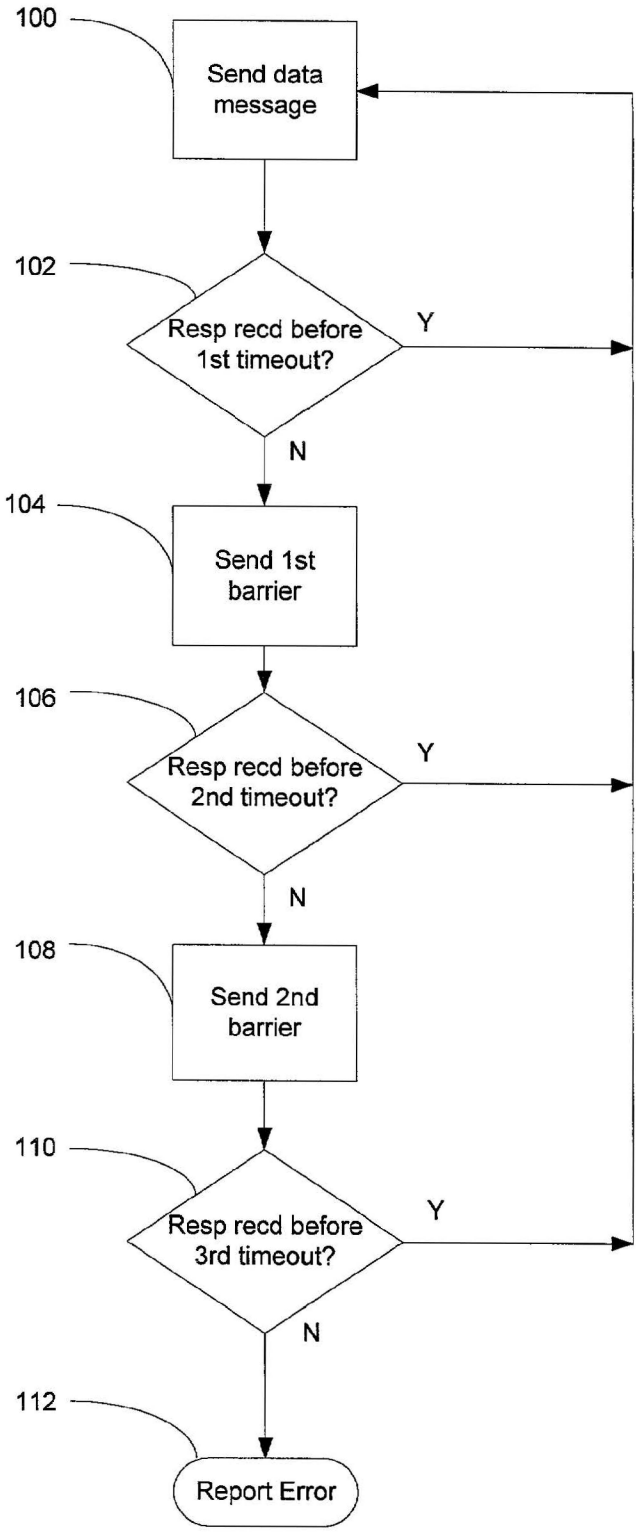
100
Send data message
102
Resp recd before 1st timeout?
Y
N
104
Send 1st barrier
106
Resp recd before 2nd timeout?
Y
N
108
Send 2nd barrier
110
Resp recd before 3rd timeout?
Y
N
112
Report Error

FIG. 4

SYSTEM RECOVERY FROM ERRORS FOR PROCESSOR AND ASSOCIATED COMPONENTS

RELATED APPLICATIONS

[0001] This is a continuation-in-part of U.S. patent application Ser. No. 09/209,635 filed on Dec. 10, 1998 entitled "ERROR SELF-CHECKING AND RECOVERY USING LOCKSTEP PROCESSOR PAIR ARCHITECTURE," the disclosure of which is incorporated herein by reference as if explicitly set forth.

BACKGROUND OF THE INVENTION

[0002] The invention relates generally to fault-tolerant data processing systems and more particularly to a method, and apparatus implementing that method, for recovering from recoverable errors in such a manner as to reduce the impact of the recoverable error on external devices or software utilizing the processing system. The invention may advantageously be applied, for example, in processing systems using two or more lockstep processors for error-checking, Among the important aspects of a fault-tolerant architecture are (1) the ability to tolerate a failure of a component and continue operating, and (2) to maintain data integrity in the face of a fault or failure. The first aspect often sees employment of redundant circuit paths in a system, so that a failure of one path will not halt operation of the system.

[0003] One fault-tolerant architecture involves the use of self-checking circuitry, which often involves using substantially identical modules that receive the same inputs to produce the same outputs, and those outputs are compared. If the comparison sees a mismatch, both modules are halted in order to prevent a spread of possible corrupt data. Examples of self-checking may be found in U.S. Pat. Nos. 4,176,258, 4,723,245, 4,541,094, and 4,843,608.

[0004] One strong form of self-checking error detection is the use of processor pairs (and some of the associated circuitry) operating in "lockstep" to execute an identical or substantially identical instruction stream. The term lockstep refers to the fact that the two processors execute identical instruction sequences, instruction-by-instruction. When in lockstep, the processors may be tightly synchronized or, if not synchronized, the one processor may lag the other processor by a number of cycles. According to the lockstep technique, often referred to as a "duplicate and compare" technique, each processor in the pair receives the same input information to produce the same results. Those results are compared to determine if one or the other encountered an error or developed a fault. The strength of this type of error detection stems from the fact that it is extremely improbable that both processors will make identical mistakes at exactly the same time.

[0005] Fault tolerant designs may take a "fail fast" approach. That is, when the processor detects an error, it simply stops. Recovery from such an error stop is not the responsibility of the processor; rather, recovery is accomplished at the system level. The only responsibility of the processor is to stop quickly—before any incorrect results can propagate to other modules. The lockstep/compare approach to processor error detection fits well with this fail-fast approach. In principle, when a divergence between the lockstep operation of the processors is detected, the processors could simply stop executing.

[0006] As integrated circuit technology has advanced, more and more circuitry can be put on an integrated chip. Thus, on-chip processors (microprocessors) are capable of being provided very large cache memories that bring with them the advantage of fewer main memory accesses. However, such cache memories are subject to soft (transient) errors, produced, for example, by alpha particle emissions and cosmic-ray induced errors. Accordingly, it is common to find such caches protected by error correcting codes. Otherwise, the error rate of these on-chip memories would cause processor failures at a rate that is not tolerable, even by non-fault-tolerant system vendors. The error correcting codes allow the processor to recover from these soft (correctable) errors in much the same way as main-memory ECC have allowed most soft memory errors to be tolerated. However, this gives rise to a side-effect in lockstepped designs: The detection and recovery from a correctable cache error will usually cause a difference in cycle-by-cycle behavior of the two processors (a divergence), because the recoverable error occurs in only one of the two devices.

[0007] One solution to this problem is to have the error correction logic always perform its corrections in-line (a.k.a. in "zero time"), but this approach can require extra circuitry in the access path, resulting in slower accesses even in the absence of the error. This approach, therefore, is often deemed unacceptable for high speed designs, because of the associated performance penalty.

SUMMARY OF THE INVENTION

[0008] According to one aspect of the invention there is provided a method of error recovery in a lockstep computer processing system, the system comprising a primary processor and a secondary processor and a bridge to a network, comprising the steps of:

- [0009] operating the primary and secondary processors in lockstep;
- [0010] receiving an error notification resulting from an error in either the primary processor or the secondary processor;
- [0011] determining if the error is a recoverable error; and
- [0012] if the error is a recoverable error, then
  - [0013] saving the state of either the primary or the secondary processor to a memory; and
  - [0014] resetting and restarting the primary and secondary processors using the saved state.

[0015] The method may further comprise the steps of:

- [0016] detecting a divergence in the operation of the primary and secondary processors before receiving the error notification;
- [0017] waiting for a predetermined time after detecting the divergence; and
- [0018] if the error notification is received before the expiry of the predetermined time and if the error is determined to be a recoverable error, then treating the error as a recoverable error.

[0019] Still further, if the error notification is received after the expiry of the predetermined time, then the error may be treated as a non-recoverable error.

[0020] Also, a non-recoverable error on the secondary processor may be treated as a recoverable error.

[0021] If the error is determined to be a non-recoverable error, then the method may further comprise:

[0022] disabling the bridge to the network before data corruption resulting from the error can propagate onto the network.

[0023] Also, a hardware error that results in the loss of a resource that is currently not being used by the primary processor may be treated as a recoverable error.

[0024] The error notification from the processor may report an error occurring in a hardware resource, the error notification including an indication as to whether the hardware resource is critical or non-critical.

[0025] In use, a hardware resource may be disabled if an error occurs in the hardware resource and it is a non-critical resource. Also, the hardware resource may be retried after processor restart to determine if the error in the hardware resource can be cured by the processor reset.

[0026] According to another aspect of the invention, the system includes a single main memory, and the step of detecting divergence comprises the steps of:

[0027] comparing memory commands generated by the primary processor with memory commands generated by the secondary processor;

[0028] executing only the memory commands generated by the primary processor; and

[0029] signaling a divergence detection if the memory commands issued by the primary processor differ from the memory commands issued by the secondary processor.

[0030] The method may further comprise the steps of:

[0031] detecting a divergence in the operation of the primary and secondary processors at the bridge to the network; and

[0032] shutting off the bridge to the network immediately unless the error has previously been determined to be a recoverable error.

[0033] According to yet another aspect of the invention, the divergence detection is conducted by comparing unique signatures of processor state received from the primary and secondary processors. The unique signatures may be generated by applying an algorithm to state information for the primary and secondary processors.

[0034] According to a further aspect of the invention, the method may further comprise the steps of conducting first and second flushes of cache memory of either the primary or the secondary processor.

[0035] Still further, the method may include the step of conducting a high-speed reset and restart of the bridge to the network. The bridge to the network may have a custom high-speed reset and restart procedure, or may be designed from scratch to have reset and restart quickly.

[0036] According to another aspect of the invention, the method may include the steps of:

[0037] setting a watchdog timer; and

[0038] treating the error as a non-recoverable error if the watchdog timer expires.

[0039] When the watchdog timer expires, the step of treating the error as a non-recoverable error may comprise the step of conducting a hard-reset of the lockstep computer processing system.

[0040] Still further, the step of restarting the primary and secondary processors using the saved state further may include the step of:

[0041] running the bridge to the network from a main memory until a bridge local memory has been initialized.

[0042] According to another aspect of the invention, when the lockstep computer processing system is being utilized by a network resource, the method further comprises the steps of the network resource:

[0043] sending a data message to the lockstep computer processing system, the data message being lost due to the resetting and restarting of the primary and secondary processors;

[0044] sending a first inquiry message to the lockstep computer processing system after a first timeout period, the first inquiry message being lost due to the lockstep computer processing system being unavailable; and

[0045] sending a second inquiry message after a second timeout period;

[0046] wherein the sum of the first and second timeout periods is selected to be greater than an expected recovery time for the lockstep computer processing system.

[0047] According to another aspect of the invention there is provided a computer system comprising:

[0048] a primary processor and a secondary processor being configured to operate in lockstep; and

[0049] an error-handling module to receive an error notification resulting from an error in either the primary processor or the secondary processor, to determine if the error is a recoverable error, and, if the error is a recoverable error, then to initiate saving the state of either the primary or the secondary processor to a memory and to reset and restart the primary and secondary processors using the saved state.

[0050] The error-handling module may be further configured to receive a notification of a divergence in the operation of the primary and secondary processors before receiving the error notification, the error-handling module then being further configured to

[0051] wait for a predetermined time after receiving the notification of divergence; and

[0052] if the error notification is received before the expiry of the predetermined time and if the error is determined to be a recoverable error, to treat the error as a recoverable error.

[0053] If the error notification is received after the expiry of the predetermined time, then the error-handling module may treat the error as a non-recoverable error. Also, a non-recoverable error on the secondary processor may be treated as a recoverable error.

[0054] Still further, the system may further comprise a bridge to a network, wherein

[0055] if the error is determined to be a non-recoverable error, then the system is configured to

[0056] disable the bridge to the network before data corruption resulting from the error can propagate onto the network.

[0057] According to another aspect of the invention, a hardware error that results in a loss of a resource that is not being used by the primary processor is treated as a recoverable error.

[0058] The system may be further configured to disable the hardware resource if the hardware resource is non-critical. The system may also be further configured to retry the hardware resource after processor restart to determine if the error in the hardware resource can be cured by the processor reset.

[0059] According to another aspect of the invention, the system may further comprise a main memory, the system being configured to detect divergence by:

[0060] comparing memory commands generated by the primary processor with memory commands generated by the secondary processor;

[0061] executing only the memory commands generated by the primary processor; and

[0062] signaling a divergence detection if the memory commands issued by the primary processor differ from the memory commands issued by the secondary processor.

[0063] The system may further comprise:

[0064] a bridge to an external network, the computer system being configured to:

[0065] detect a divergence in the operation of the primary and secondary processors at the bridge to the network; and

[0066] shut off the bridge to the network immediately unless the error has previously been determined to be a recoverable error.

[0067] According to a further aspect of the invention, the error-handling module does divergence detection by comparing unique signatures of processor state received from the primary and secondary processors. The unique signatures may be generated by applying an algorithm to state information for the primary and secondary processors.

[0068] Still further, in the system, the reset and restart of the primary and secondary processors may include the step of:

[0069] conducting first and second flushes of cache memory of either the primary or the secondary processor.

[0070] According to another aspect of the invention, the bridge to the network is configured to conduct a high-speed reset and restart during the reset and restart of the primary and secondary processors. The bridge to the network may have a custom high-speed reset and restart procedure, or may be designed from scratch to reset and restart quickly.

[0071] The system may further comprise a watchdog timer, the system treating the error as a non-recoverable error if the watchdog timer expires during the reset and restart of the primary and secondary processors. The system typically conducts a hard-reset of the lockstep computer processing system upon expiry of the watchdog timer.

[0072] The computer system may further be configured to run the bridge to the network from a main memory until a bridge local memory has been initialized upon the reset and restart of the primary and secondary processors.

[0073] According to another aspect of the invention, the system further comprises a network resource for utilizing the primary and secondary processor over a network, the network resource being configured to:

[0074] send a data message to the network bridge over the network, and, when the data message is lost due to the resetting and restarting of the primary and secondary processors, to:

[0075] send a first inquiry message to the network bridge after a first timeout period, and, when the first inquiry message is lost, to:

[0076] send a second inquiry message after a second timeout period;

[0077] wherein the sum of the first and second timeout periods is selected to be greater than an expected recovery time for the primary and secondary processors.

[0078] In one embodiment, the network resource sends out no retries of the data message until a response is received to an inquiry message.

[0079] Further aspects of the invention will be apparent from the Detailed Description of the Drawings.

BRIEF DESCRIPTION OF THE DRAWINGS

[0080] The accompanying drawings, which are incorporated in and constitute a part of this specification, illustrate several embodiments of the invention and together with the description, serve to explain the principles of the invention. Wherever convenient, the same reference numbers will be used throughout the drawings to refer to the same or like elements.

[0081] **FIG. 1** is a simplified block diagram of the logical processor of the present invention formed from two interconnected processor units;

[0082] **FIG. 2** is a timing diagram illustrating the detection and handling of errors and divergence for the system shown in **FIG. 1**;

[0083] **FIG. 3** is a timing diagram illustrating the use of inquiry messages to prevent a recovering lockstep system from being removed as a resource; and

[0084] **FIG. 4** is a flowchart illustrating the transmission of inquiry messages to a system undergoing a recovery.

DETAILED DESCRIPTION OF THE DRAWINGS

[0085] To enable one of ordinary skill in the art to make and use the invention, the description of the invention is presented herein in the context of a patent application and its requirements. Although the invention will be described in accordance with the shown embodiments, one of ordinary skill in the art will readily recognize that there could be variations to the embodiments and those variations would be within the scope and spirit of the invention.

[0086] Referring now to the figures, and specifically for the moment **FIG. 1**, there is illustrated a logical processor designated generally with the reference numeral **10**. It should be understood that the logical processor **10** usually forms a part of a larger data processing system that is not shown in detail in order to refrain from unduly complicating the figure. As **FIG. 1** shows, the logical processor **10** includes a Master processor unit **12** and a Shadow processor unit **14**, both of which also include various cache memory structures that may be internal or external, both to the processor or microprocessor forming the processor unit.

[0087] The Master processor **12** is coupled, via a memory checker **16**, to a memory **20**, and to an input/output (I/O) bridge **22** and a PCI to Server Area Network (SAN) I/O bridge **24** by a Master I/O bus **26** and a master PCI-X bus **27**. The bridges **22** and **24** connect the logical processor **10** to SAN I/O links **23**, providing the input/output gateway between the logical processor **10** and the remainder of the data processing system. For example, the logical processor **10** may communicate across the SAN with another network resource **25**. The network resource **25** may be another logical processor, or other network node. In particular, the network resource **25** may be utilizing the logical processor **10** as a resource, or may desire to use the logical processor **10** as a resource, in which case loss of communications with the logical processor may have negative consequences as discussed below with reference to **FIG. 3**.

[0088] The master processor **12** also has a general input/output (GIO) port coupled to an error-handling module, in the illustrated embodiment comprising a "glue" logic **18**. The "glue" logic **18** may be implemented as a field programmable gate array (FPGA), an application-specific integrated circuit (ASIC), a custom integrated circuit (IC) or discrete components, depending on the implementation criteria.

[0089] The PCI to SAN I/O bridge **24** is implemented as an ASIC that also does primary divergence checking by comparing output received from the shadow processor **14** via a shadow PCI to SAN I/O bridge **28** and a cross-checking bus **30**. The primary divergence detection is done by comparing transmit symbol sequences in the SAN stacks contained in the bridges **24** and **28**, and if there is any difference in the transmit symbol sequences produced by the master and shadow processors **12**, **14**, then a divergence is signaled to the "glue" logic **18**. When the cross checking between the SAN-PCI bridges **24**, **28** indicates a divergence, the PCI-SAN bridge **24** is immediately fenced off from the SAN **23**. Divergence detection at this point is indicative of the potential of an error or data corruption that is about to propagate onto the SAN **23**, which is why immediate isolation of the logical processor **10** from the SAN is required. However, the SAN-PCI bridge **24** is not fenced off immediately upon divergence detection if it has already been determined that the divergence is as a result of a recoverable error that will not cause data corruption. That is, referring to **FIG. 2** (discussed in more detail below), there is no "Y" time for a divergence detected at the PCI-SAN bridges **24**, **28**. The PCI-SAN bridge **24** also has an associated local memory **31**, while the shadow PCI-SAN bridge **28** has an associated local memory **33**. The local memories **31**, **33** are used for buffering and temporary work storage.

[0090] The Shadow processor unit **14** similarly connects via the memory checker **16**, to the memory **20**, and to a shadow (I/O) bridge **32** and to the shadow PCI to SAN I/O bridge **28** by a shadow I/O bus **36** and a shadow PCI-X bus **38**. As for the master processor **12**, the shadow processor **14** has a GIO port connected to the "glue" logic **18**.

[0091] In principle, the detection of divergence need only be detected at one point, that is, where the data leaves the local processor **10** at the PCI to SAN I/O bridge **24**. That is, the processor could be designed with full redundancy, including two copies of main memory, and the results could be compared at only one point—where the data leaves the processor **10** and is placed on the SAN. However, to reduce the cost of the design and to reduce the latency of error detection, a single copy of main memory **20** is provided. For this configuration, it is desirable to check any data that the master processor **12** writes to the memory **20** before it is written, because once written, we have lost the "second opinion"—there will be no other immediate opportunity to detect the error.

[0092] In one implementation of the memory checker **16**, only write instructions issued by the master processor **12** and shadow processor **14** are compared to detect divergence. However, comparing read instructions can also reduce the error detection latency, and this is typically done in the embodiment of **FIG. 1**. Thus, the memory checker **16** functions to detect divergence in write data, write addresses, read addresses, and instructions. When a divergence is detected, the operation completes normally (using the master processor's instruction), and a divergence is reported to the "glue" logic **18** over peripheral bus **40**.

[0093] When the master processor **12** issues a memory read command, the control instructions, addresses, and any data in the read command are checked against the corresponding memory read command issued by the shadow processor **14**. If the read commands are not identical, the read operation is completed using the master processor's command, and a divergence is reported to the "glue" logic **18**. If the read commands are identical, the master processor's read command is passed through to the memory **20** and the data from the memory **20** in response is passed by the memory checker **16** through to the master processor **12**, as well as being "reflected" to the shadow processor **14**.

[0094] Both the Master processor unit **12** and the Shadow processor unit **14** perform write operations. However, it is only the master processor unit **12** that is actually writing data to memory; the data "written" by the shadow processor unit **14** is compared in the memory checker **16** with that written to memory **20** by the master processor unit **12**. Should the memory checker **16** detect a mismatch between any of the data, address, or control instructions between the memory write commands issued by the Master and Shadow processor units **12**, **14**, a divergence will be reported to the "glue" logic **18**.

[0095] The memory checker **16** also saves historical data (e.g. the last few hundred memory commands) in a rotating buffer. This may be used for debugging, and is saved off as part of the error recovery procedures discussed below.

[0096] Further, in addition to doing divergence detection at the memory checker **16** and the PCI to SAN bridge **24**, it is beneficial to do divergence detection "within" the master and shadow processors **12**, **14**. This detection is done by the "glue" logic **18** by comparing outputs from the GIO ports of the master and shadow processors **12**, **14**. This can also reduce the latency of divergence detection. This is particularly so in the case of processors having large cache memories. As a result of the presence of a large cache memory, a processor may operate for a large number of clock cycles without accessing main memory or providing an output on the I/O bus. Thus, the detection of divergence may take place many cycles after the divergence has occurred. To mitigate this, the master and shadow processors are configured to output to the GIO port a small number of linear feedback shift register (LFSR) signals that are likely to indicate divergence earlier than the memory or I/O interfaces. These LFSR signals are a compressed signature of the current state of the respective processor **12**, **14**. To generate these signals, each processor **12**, **14** takes certain internal data (e.g. the program counter and selected internal flags) and applies a hashing algorithm to them. The result of the hashing algorithm is a small, testable signature that is related to the internal state of the processor. By comparing the signatures generated by the master processor **12** with the signatures generated by the shadow processor **14**, a very early divergence detection can be done.

[0097] These LFSR signals are pushed out onto the GIO port when the GIO port is idle. Thus, by comparing the outputs of the GIO ports of the master processor **12** with the shadow processor **14**, divergence may be detected more quickly than otherwise. This comparison is done in the "glue" logic **18**, and handled as described in more detail below.

[0098] Generally, operation of logical-processor **10** has the Master and Shadow processor units **12**, **14** operating in close synchrony to execute identical instruction streams, instruction by instruction—as indicated above. Preferably, the two processor units **12**, **14** are not tightly locked, but operate within one or several processor clock cycles apart. This, as those of ordinary skill in this art will readily recognize, will require appropriate buffering in order to synchronize checking of the data, address, and control signals produced by the Master and Shadow processor units.

[0099] Before discussing error and divergence detection and handling, it is useful to discuss the difference between an error and a divergence, and to discuss the types of errors that may be encountered by the master and shadow processor units.

[0100] A divergence, while strictly considered to be any difference in the operation of the master and shadow processors, is more conveniently considered to be a divergence that has manifested itself at one of the divergence detection points. In the illustrated example, divergence is detected at the PCI to SAN bridge **24**, the "glue" logic **18**, and the memory checker **16**. An error, on the other hand, is any error in the processing done by the processor **10**, in the master processor **12**, shadow processor **14** or other component. Error detection is typically done using known error-checking mechanisms utilized in microprocessors and computer memories. That is, the master processor **12** and the shadow processor **14** are themselves able to detect errors in their processing and to report an error notification to the "glue" logic **18**. The error notification will also include an indicator that can be used to determine whether the error is a) fatal to the processor or b) will produce a divergence but is not actually an error that will compromise data integrity. An example of the latter is a correctable memory error.

[0101] Divergence detection is done using a comparison, although the detection and signaling of an error may be taken as an indicator of imminent divergence. An error will typically lead to a divergence if no corrective action is taken, but the appropriate corrective action may prevent divergence from occurring, or may mitigate the effects thereof. The occurrence of an error in the master or shadow processors **12**,**14** is signaled over a signal line to the "glue" logic **18** to provide this early warning. Of course, as a generalization, the longer time that passes from error or divergence detection without remedial action, the more serious the impact of the error or divergence will be.

[0102] The reporting of errors by the processors **12**, **14** will in all likelihood predict the vast majority of divergences and allow a controlled recovery to take place as discussed below. Divergence detection occurring in the absence of this error reporting should be much less likely, but typically would indicate a more serious error.

[0103] Errors may be categorized as recoverable or non-recoverable. As the name suggests, a recoverable error is an error from which recovery is normally possible, and which typically will not result in data corruption or loss of data integrity. A non-recoverable error is considered to be an error that may result in loss of data integrity and from which normal recovery is not possible. When utilizing lockstepped processors, a recoverable error on one processor—while not resulting in data corruption—will nevertheless result in a divergence, since it will take additional processing and some number of clock cycles on the part of the one processor to recover from the error. To return the processors to lockstep, a reset of the processors is done as below after normal error handling (to deal with the recoverable error) is complete. For a non-recoverable error, the reset is both the mechanism to recover from the error and the mechanism to reestablish lockstep if lockstep has been lost. Also, for a recoverable error, the isolation of the processor **10** from the SAN can be accomplished in a more controlled manner (since corrupt data will not propagate onto the SAN), while for a non-recoverable error involving the risk of data corruption, the processor **10** is isolated more quickly to prevent corrupt data from propagating onto the SAN.

[0104] While these error definitions are useful for purposes of illustration, it should be noted that a non-recoverable error for one component may not be considered a non-recoverable error at a different level of the architecture. For example, a non-recoverable error occurring in the shadow processor **14** is typically a recoverable error as far as the processor **10** is concerned. This is because the shadow processor **14** does not write to memory or provide any actual output. There is thus no risk of data corruption occurring as a result of the non-recoverable error on the shadow processor, and the recovery of a non-recoverable error on the

shadow processor **14** proceeds as for recoverable error recovery for the processor **10**. Also, a non-recoverable error that does not threaten data integrity or does not cause a divergence (but which requires a reset to recover from the error) may be treated similarly to a recoverable error. For example, a resource that is not currently being utilized by the master processor may be lost to the processor. This will result in a hardware error signal, but will not cause divergence or data corruption as the resource is not being utilized. To recover from this error a reset is probably required, but this can be done in an orderly manner as if the error was a recoverable error.

[**0105**] Still further, processor resources may be pre-marked as being critical or optional resources. For example, floating point hardware may be marked as optional if there is a software floating point routine that may be used in place of the floating point hardware that will be fully functional but perhaps slower. Other examples may be portions of cache memory, or an optional part of the I/O bridges. If the resource that fails could compromise data integrity in the current or future processor operations, the resource is critical and the failure is treated as a non-recoverable error. If not, appropriate action may be taken during the recoverable error handling procedure. For example, the resource can be disabled upon processor restart, or a restart can be performed and a retry attempted to see if the resource itself only has a recoverable error that will be cured by the reset.

[**0106**] It is significant that the master and shadow processors **12**, **14** themselves can detect a wide variety of errors that will eventually cause a divergence. This allows divergence to be predictively detected, potentially long before a divergence manifests. In particular, due to large cache memories, it is possible that one of the processors **12**, **14** may run divergent on cached data for a significant period without accessing main memory or providing a detectable output.

[**0107**] Bearing this discussion in mind, **FIG. 2** illustrates a timing diagram for recoverable error detection and recovery. For the purposes of the diagram, a recoverable error can be any one of a) a recoverable error on the master processor **12**, b) a recoverable error on the shadow processor **14**, c) a non-recoverable error on the shadow processor **14** or d) a non-recoverable error on a resource that is currently not being utilized by the processor **10**. The non-recoverable error on the shadow processor **14** is considered to be a recoverable error for the system, because the shadow processor **14** is isolated and errors in the shadow processor **14** will not propagate to the memory **20** or onto the SAN **23**. That is, the master processor **12** (and hence the processor **10**) can continue operating despite the loss of the shadow processor **14**, while an appropriate recovery is executed.

[**0108**] Turning now to **FIG. 2**:

[**0109**] "A" is the earliest point at which a recoverable error can validly be reported to the "glue" logic **18**;

[**0110**] "B" is the point at which divergence is reported to (or detected in) the "glue" logic **18**;

[**0111**] "C" is the latest point at which a recoverable error can validly be reported to the "glue" logic **18**;

[**0112**] "X" is the time from the recoverable error signal to observable divergence (this is typically not very long, since the processing of recoverable error handling will force a divergence in most cases).

[**0113**] "Y" is the maximum time from observable divergence to recoverable error signal receipt, during which time recoverable error handling can still be done.

[**0114**] A recoverable error signal may be received at any time from A to C and recoverable error handling can still be done. That is, the error does not result in disruption of the operation of the processor **10** (other than a loss of clock cycles to correct the error) and there is no need to fence off the processor **10** from the SAN I/O links **23** (i.e. stop further incoming or outgoing messages from passing between the SAN and the master and shadow processors **12**, **14**).

[**0115**] If a recoverable error is reported during the "X" time before observable divergence, the following steps are taken:

[**0116**] a. The "glue" logic **18** notifies the PCI to SAN bridges **24**, **28** that a divergence will occur and notifies the PCI to SAN bridges to ignore the divergence when it does occur. The "glue" logic **18** also disables cross-checking (of output received across cross-checking bus **30**) in the master PCI to SAN bridge **24**.

[**0117**] b. There is no immediate fencing off of the SAN ports of the master PCI to SAN bridge **24**;

[**0118**] c. Recoverable error recovery is performed as described below.

[**0119**] If a recoverable error is reported during the time after observed divergence "B", but before "C," (That is, during the "Y" period), then the following steps are taken:

[**0120**] a. The "glue" logic **18** receives an observed divergence signal (or determines divergence from its comparison of the GIO ports) at time "B" and notifies the PCI to SAN bridges **24**, **28** that a divergence has occurred.

[**0121**] b. The PCI to SAN bridges **24**, **28** operate normally for a period of up to Y. The value of Y has previously been programmed into the bridges **24**, **28**.

[**0122**] c. The "glue" logic **18** receives a correctable error signal during time "Y"

[**0123**] d. The "glue" logic **18** notifies the PCI to SAN bridges **24**, **28** to ignore the divergence.

[**0124**] e. There is no immediate fencing off of the SAN ports of the master PCI to SAN bridge **24**;

[**0125**] f. Recoverable error recovery is performed as described below.

[**0126**] If a recoverable error is reported the after observed divergence "B" and after "C," (That is, after the "Y" period), then a divergence indicating a fatal error has occurred. In such a case, the delay in identifying and handling the recoverable error has caused the situation to become critical, and the recoverable error is treated (upon the expiration of Y) as a non-recoverable error. The following steps illustrate this scenario:

[**0127**] a. The "glue" logic **18** receives an observed diverge signal (or determines divergence from its

comparison of the GIO ports) at time "B" and notifies the PCI to SAN bridges **24**, **28** that a divergence has occurred.

[**0128**] b. The PCI to SAN bridges **24**, **28** wait for a period of up to Y. The value of Y has previously been programmed into the bridges **24**, **28**.

[**0129**] c. Upon expiration of Y, the PCI to SAN bridge **24** disables cross-checking in the master PCI to SAN bridge **24**.

[**0130**] d. The PCI to SAN bridge **24** fences off the SAN links **23**.

[**0131**] e. Low level operating system (OS) software will check the error registers in the "glue" logic **18**, determine that a non-recoverable error has occurred, and execute non-recoverable error handling as described below in more detail.

[**0132**] Of course, the "glue" logic **18** may also receive a non-recoverable error signal on the GIO port of the master processor **12**. If the non-recoverable error compromises data integrity, the following steps are performed:

[**0133**] a. The "glue" logic **18** receives a non-recoverable error signal from the master processor **12**.

[**0134**] b. The low level OS software will check the error registers in the "glue" logic **18**, verify that a non-recoverable error has occurred and that data integrity has been compromised, and report this to the "glue" logic **18**.

[**0135**] c. The "glue" logic **18** sends an interrupt to the PCI to SAN bridge **24**, which immediately fences off the SAN links **23** (i.e. no further incoming or outgoing messages pass between the SAN and the master and shadow processors **12**, **14**).

[**0136**] d. The low level OS software executes non-recoverable error handling as described in more detail below.

[**0137**] Alternatively, the "glue" logic **18** receives a non-recoverable error signal on from the GIO port of the master processor **12** that does not compromise data integrity. In such a case, the following steps are performed:

[**0138**] a. The "glue" logic **18** receives a non-recoverable error signal from the master processor **12**.

[**0139**] b. The low level OS software checks the error registers in the "glue" logic **18**, verifies that a non-recoverable error has occurred and that data integrity has not been compromised, and reports this to the "glue" logic **18**.

[**0140**] c. The "glue" logic **18** asserts both a "Diverge" and a "Diverge Ignore" signal to the PCI to SAN bridges **24**, **28**, as well as disabling cross-checking in the master PCI to SAN bridge **24**.

[**0141**] d. There is no immediate fencing off of the SAN ports of the master PCI to SAN bridge **24**;

[**0142**] e. Recoverable error recovery is performed as described below.

[**0143**] The detailed sequence of operations for recoverable error recovery is as follows. Note, this assumes that the error has been identified as recoverable before the expiry of Y in **FIG. 2**. Also, while the recoverable error recovery is described below primarily with respect to the occurrence of a recoverable error in the master processor, the procedures are equally applicable to the occurrence of a recoverable error on the shadow processor. Also, while the description below describes that the state of the master processor **12** is saved for use when restarting the master and shadow processors, the state of the shadow processor may also be saved for this purpose.

[**0144**] As discussed below, the recoverable error recovery involves the use of a "fast reset" procedure that utilizes a quicker reset and restart procedure than a normal or "full" reset and restart. As part of the fast reset, a pared down version of the built in self-test (BIST) routine is executed by the processor **10**. This fast BIST does not include less-critical tests that are run during normal reset. The fast BIST is customized to balance the conflicting requirements of returning the processor **10** to normal operation as soon as possible and ensuring that the processor is indeed functioning correctly after the reset. Also, the fast reset preserves the contents of the memory **20**, while a full reset does not. To ensure that the processor **10** returns to full functionality quickly, it will be appreciated that the fast reset has more stringent time restraints on it than a full reset.

[**0145**] 1 A recoverable error occurs in the master processor **12**. The master processor **12** generates two interrupts. The first interrupt is internal to the master processor, and is for internal error handling. The second interrupt is passed to the "glue" logic **18** to determine external error handling. As described below, the "glue" logic **18** will return an interrupt to the master processor **12** to instruct the master processor to conduct the error recovery.

[**0146**] 2 The first, internal interrupt, invokes the appropriate low level OS software routine to handle the error, for example by scrubbing the cacheline, gathering data and setting flags for deferred error logging, and clearing any error status registers. The low level OS software handles the particular error in a known manner independently to the recovery from the divergence.

[**0147**] 3 If a recoverable error occurs on the shadow processor **14**, there is a divergence as soon as the shadow processor attempts to execute instructions that are not in its cache, and lockstep is lost as soon as it receives such an instruction. That is, the shadow processor **14** will receive a mirrored instruction that has been requested by the master processor **12**, which has been executing instructions normally. The shadow processor **14**, which has been dealing with the recoverable error, will not be expecting that instruction, and lockstep is lost. In a similar manner to the master processor **12**, upon detection of the recoverable error, the shadow processor **14** generates two interrupts. The first interrupt is internal to the shadow processor, and is for internal error handling. The second interrupt is passed to the "glue" logic **18** to determine external error handling. As described below, the "glue" logic **18** will return an interrupt to the master processor **12** to instruct the master processor to conduct the error recovery.

[**0148**] 4 The interrupt from the "glue" logic **18**, (or one of the other components if appropriate e.g. a divergence

detection by the PCI to SAN bus **24**) is passed to the master processor **12**, which generates an interrupt to the low level OS software.

[**0149**] 5 The low level OS software then reads the available error registers and saves their contents to provide an error record.

[**0150**] 6 The low level OS software then determines whether the error is a non-recoverable error or a recoverable error. In the case of a non-recoverable error, the reset proceeds as discussed in more detail below.

[**0151**] 7 In the case of a recoverable error, the low level OS software now masks the error registers that did not indicate the original error. For example, in the case of a recoverable error reported on the GIO port of the master processor **12**, it is necessary to mask the error registers for divergence detection in the memory checker **16** and in the PCI to SAN bridge **24**. This disabling of cross checking is done to prevent the effects (i.e. divergence) of the same error from being reported as a new, unrelated error, while the original error is being dealt with.

[**0152**] 8 The low level OS software then increments a counter for recoverable errors by the processor, and then checks a threshold for too many errors in a given time. If the threshold has been exceeded, then a full reset is performed. A full reset is the most drastic of the error-handling procedures. When a full reset is performed, the processor **10** is taken offline completely, and is lost as a resource to the larger computing system. Depending on the results of further diagnostic procedures, the processor **10** may or may not be returned to service.

[**0153**] 9 The low level OS software then obtains further data (in addition to the initial data saved from the original error reporting). The further data includes the type of error, which processor had the error, memory checker **16** data such as status and selected history buffer data, "glue" logic **18** data such as the state of error and event source registers, master processor **12** register data including error syndrome bits, the address of the error and the processor error state; PCI to SAN bridge registers; I/O to PCI bridge registers; and appropriate sections of a low level OS software trace table (if implemented). Available shadow processor **14** data is also saved for error logging purposes, but this is normally less than the data saved for the master processor due to the more limited role played by the shadow processor **14**. Normally, at least some shadow processor **14** error state data is saved.

[**0154**] 10 The low level OS software then initiates a reset on the shadow processor **14** by setting an appropriate bit in the shadow processor **14** reset control register.

[**0155**] 11 The low level OS software now invokes a SAN call to suspend operations of the PCI to SAN bridges **24**, **28**. This is done by dispatching the SAN Services Fast Reset Interrupt Process (FRIP). If the FRIP does not register, then the processor **10** is in some type of initialization, and the SAN diverts to full reset handling. If the FRIP is already running, then back-to-back errors have occurred in too short a time for them both to be handled, or there is an error in operation flow and the SAN also diverts to full reset handling.

[**0156**] 11.1 The FRIP obtains and maintains control of the processor execution throughout the recoverable error recovery process. The FRIP runs at the highest priority of any interrupt process, to prevent it from being delayed.

[**0157**] 11.2 The FRIP then initiates a call to the low level OS software to do a cache flush. The low level OS software does the cache flush, returning the contents of the caches of master processor **12** to main memory. This first cache flush is done to reduce the time required for the cache flush during the time the processor **10** is blacked out from the SAN. When the cache flush is complete, the SAN checks if there were any uncorrectable cache memory errors. If so, the SAN collects relevant error logging data and diverts to a full reset. If a correctable error occurs, the normal low level OS software recovery routine for the correctable cache error is allowed to run uninterrupted upon return of the cache flush routine to the low level OS software.

[**0158**] The low level OS software now returns control to the SAN Services FRIP.

[**0159**] 12 The FRIP will:

[**0160**] 12.1 Issue a suspend instruction to a direct memory access (DMA) engine in the PCI to SAN bridge **24**. The state of the DMA engine will be saved so that it can be restarted appropriately.

[**0161**] 12.2 Save the state of the PCI to SAN bridge **24** to be restored after the fast reset. The contents of the PCI to SAN bridge **24** local memory will be lost upon reset.

[**0162**] 12.3 Turn off the SAN ports in the PCI to SAN bridge **24**. The critical blackout period has now begun.

[**0163**] 12.4 Invoke a "fast reset finish" low level OS software routine.

[**0164**] 13 The low level OS software "fast reset finish" routine will now save all required states to resume operation after reset. In particular, this routine will:

[**0165**] 13.1 In the master processor **12**, process any outstanding incoming I/O interrupts by checking all of the PCI to SAN bridge **24** interrupt queues and copying their contents to shadow queues in main memory. As the SAN ports are shut off, this closes the door on any I/O that has been acknowledged by the PCI to SAN bridge **24** but had not yet been processed by the master processor **12**.

[**0166**] 13.2 Flush master processor **12** cache to main memory. Assuming that the first flush left the cache fairly clean, this will take a very short time. The second flush is done to close the door on any I/O that came in before the SAN ports could be shut down.

[**0167**] 13.3 Disable master processor interrupts. This keeps any access to main memory from occurring during the fast reset.

[0168] 13.4 Reset the PCI to SAN bridge **24** ASICs and the I/O bridge **22** ASICS. That is, all the I/O chips between the master processor **12** and the SAN are reset. When these chips are restarted, they may restart using custom fast restart procedures (e.g. shorter built in self-test (BIST) routines, faster start-up loops etc.), or they may have been designed initially to have fast reset and restart procedures.

[0169] 13.5 From the master processor **12**, notify the "glue" logic **18** that the master processor **12** is ready to reset. This is done by writing a bit (via the GIO port, since the bridges **22** and **24** are resetting) to a master processor reset control register in the "glue" logic **18**. There is also a watchdog timer that would cause a full reset if this bit is not written before the watchdog timer expires.

[0170] 14 The "glue" logic **18** does a fast reset on both master and shadow processors **12**, **14**. This fast reset low level OS software routine executes from the "glue" logic cache and loops without access to main memory, to avoid any main memory **20** access during the fast reset.

[0171] 15 The low level OS software now resumes processing. It firstly checks the appropriate flags to determine the nature of the reset (e.g. fast reset, full reset, watchdog timer reset etc.). For the fast reset case, the low level OS software routine continues as follows:

[0172] 15.1 The required states for the master and shadow processors **12**, **14** are initialized. If desired, further processor registers can be logged for error logging purposes.

[0173] 15.2 The I/O ports of the master and shadow processors **12**, **14** are initialized

[0174] 15.3 The master and shadow I/O bridges **22**, **32** are initialized

[0175] 15.4 The memory checker **16** is initialized and its error registers are unmasked

[0176] 15.5 The low level OS software uses the saved stack data to return the low level OS software FRIP routine to its status as it was when the FRIP called the "fast reset finish" routine.

[0177] 15.6 The FRIP waits for the bridges **24**, **28** to complete their reset, and then restarts them as follows:

[0178] 15.6.1 Reinitialize the bridges **24**, **28** using the stack data previously saved to memory

[0179] 15.6.2 Enable the SAN ports—the blackout period is now over

[0180] 15.6.3 Set a flag to disallow writes to the local memory **31**, **33** of the bridges **24**, **28** while the memory is being initialized

[0181] 15.6.4 Start initialization of the bridges' **24**, **28** local memory **31**, **33**

[0182] 15.6.5 Restore from memory any operations that were in progress in the bridges **24**, **28**

[0183] 15.6.6 Restart any and all interrupts that were saved into the shadow queues

[0184] 15.6.7 Note that the initialization and reloading of the local memories **31**,**33** of the bridges **24**, **28** might take a long time relative to the other processes in the recovery. To ensure that this does not unnecessarily delay the recovery process, the PCI to SAN bridges **24**, **28** run from main memory **20** until the local memories **31**, **33** have initialized. When the local memories **31**,**33** have been initialized, the initialization process will generate an interrupt to the low level OS software, which will switch the interrupt queue from the main memory to the local memories **31**, **33**.

[0185] 15.6.8 Return to low level OS software from FRIP

[0186] 15.7 Any shadow error data that was saved is now passed from the shadow processor **14** to the master processor **12** and saved for further error logging purposes

[0187] 15.8 Any process or interrupt process that were suspended due to SAN Services FRIP being invoked are allowed to run and normal operation resumes.

[0188] 16 Error information for the fast reset process is logged to the main event manager of the processor **10**

[0189] 17 Any necessary post-processing completes. For example, some of the processes (such as local memory initialization for the bridges **24**, **28** and the subsequent establishment of the access validation and translation functions of the bridges **24**, **28**) initiated in the fast reset may take longer to complete than the actual fast reset procedure, or may in fact only be called after the fast reset procedure has virtually completed. These procedures are allowed to run and complete, and are considered to be part of the post-processing.

[0190] When a non-recoverable error occurs on the master processor **12**, or one of the conditions occurs that mandates non-recoverable error handling, then non-recoverable error handling is conducted. When a non-recoverable error for the processor **10** is encountered, the processor **10** is considered to be compromised and data integrity is threatened. Non-recoverable error handling involves fencing off the processor **10** from the SAN in a timely manner to ensure that data corruption does not propagate to the SAN. The processor **10** is then shut down under conventional non-recoverable error handling, and is lost as a resource. Further diagnostics/repair/replacement then proceeds in a known manner.

[0191] Up to this point, only the effect of errors on the internal operation of the processor **10** has been considered. However, the effect of errors and error recovery on external devices also needs to be considered. As discussed above, the error recoveries are structured to ensure as far as possible that data corruption will not leave the processor **10**. This is done by fencing off the SAN ports before any corrupt data can leave the processor **10**. However, the processor **10** itself is a resource that may be being utilized by external devices, and the disappearance of this resource may adversely affect the operation of external devices. Of particular importance is the timing of the various events that take place during error recovery.

[0192] It is desirable to have the recoverable error recovery procedure take place quickly. Of specific concern is the period in which the incoming packets from the SAN are not processed. During this 'blackout' period, packets originating from other nodes will not be acknowledged. If retries time out, then the processor **10** will be taken off-line.

[0193] The recoverable error recovery procedure can be summarized as follows, showing typical timing for the current hardware implementation:

[0194] T1A—Time for the processor **10** to recognize an error, send it to the "glue" logic **18**, have the hardware process it and send an interrupt over the PCI—X bus **27**.

[0195] T1B—Time for the low level OS software to receive and respond to the interrupt. This time period is taken as the longest possible period that low level OS software will take to respond to an interrupt.

[0196] T2—Time for the master processor **12** to flush its cache for the first and longest time.

[0197] T3—Time for the low level OS software to suspend outgoing operations, save various states and prepare for reset. This ends at the low level OS software act, which is to turn off all incoming data and tell the "glue" logic **18** that the processor **10** is ready to reset.

[0198] Incoming data blackout begins at this point.

[0199] T4—Time for the master processor **12** to flush its cache for a second time.

[0200] T5—The hardware now resets, which includes:

[0201] Reset time for the shadow and master processors **12**, **14**.

[0202] Reset time for the I/O bridge **22**.

[0203] Reset time for the PCI to SAN bridges **24**, **28**.

[0204] T6—'Fast reset' time before software can turn on I/O hardware:

[0205] BIST time, I/O bridge **22** initialization, PCI to SAN bridges **24**, **28** initialization, start local memory BIST, enable the SAN logic in the PCI to SAN bridge **24** and acknowledge incoming packets etc.

[0206] At the end of this time, the blackout is over.

[0207] T7—End of PCI to SAN bridges **24**, **28** local memory **31**,**33** initialization.

[0208] Copy data from main memory to PCI to SAN bridges' **24**, **28** local memory **31**, **33** and switch PCI to SAN bridges **24**, **28** to local memory **31**, **33**.

[0209] T8—The low level OS software restores process state and OS continues as before.

[0210] During the blackout period, SAN packets (originating for example from network resource **25**) will be lost. Losing a packet is not a problem since the SAN architecture allows for packet loss. Losing an inquiry message however has more serious repercussions. If an inquiry message is lost, the operational software of the larger system (i.e. a SAN cluster) may decide to remove the processor **10** as a resource on the system. This is contrary to the purpose of the recoverable error recovery (which is to return the processor **10** and the related larger system to full functionality with minimal disruption).

[0211] There are two types of inquiry messages. The first is not unlike a ping, and is used initially to determine if a resource is available. The second type of inquiry message is used as a query when a message or packet has not been acknowledged. Instead of retrying the message or packet, an inquiry message that includes data and a special transaction ID is sent. No retries of the original message or packet are attempted until the inquiry message is returned. If an inquiry message is lost (i.e. times out with no response), the system (i.e. the cluster) will first elevate the "error" to a higher level of severity and may in fact mark the target as down and remove it as a resource to the system. This is not desirable in the invention, where an attempt is being to recover in a controlled manner that will enable the processor to continue to function as if the error had not occurred.

[0212] An inquiry message loss problem can occur when a packet and its associated inquiry message are both sent during the blackout time. For example, assume that a blackout starts near the end of the receipt of a normal packet. The client that sent the packet will send an inquiry message within a certain time (the packet time-out time) if the packet is not acknowledged. If the packet time-out time is less than the blackout time, the inquiry message may also be lost. Now it looks as though the processor **10** has failed, and it may be removed as resource from the larger system. The current embodiment of the invention proposes a double inquiry message timing solution. That is, after the transmission of the inquiry message, a second inquiry message is sent after a certain time (the inquiry message time-out time) if no response is received. The inquiry message time-out time is predefined to be longer than the longest expected blackout time. Alternatively, the sum of the packet time-out time and the inquiry message time-out time must be more than the longest expected blackout time.

[0213] This scenario is shown in **FIG. 3**, which illustrates a blackout period having a duration of Z. A normal packet from the network resource **25** arrives at time A during the blackout period, and is lost. After waiting for a packet time-out X, the network resource **25** sends out an inquiry message, which arrives at time B (note, for purposes of simplicity we are assuming that the various transmissions arrive instantaneously), and the inquiry message is also lost. However, a further inquiry message is provided that is sent by the network resource **25** after inquiry message time-out time Y. This inquiry message arrives at time C, which is after the end of the blackout period. It will be apparent from the diagram that, by making sure that the sum of X and Y is greater than Z, it can be assured that the second inquiry message will always succeed, and that the processor **10** will not prematurely be declared unavailable.

[0214] The implementation of the double inquiry message solution may depend on the type of inquiry message used. For example, the SAN protocol provides for three types of inquiry messages—client inquiry messages, pre-inquiry messages, and error recovery inquiry messages. Client inquiry messages are used for discovery purposes. For example, "sniffers" used by the system to check for viable paths. As it is less critical if a client inquiry message is lost, the current implementation does not alter the one inquiry

message implementation for client inquiry messages, although a two client inquiry message system is may be implemented. Pre-inquiry messages are used to when verifying a particular path before it is used. For pre-inquiry messages, two inquiry messages are used, each with a 20 ms timeout. Error recovery inquiry messages are used for verification before client data is resent, and are discussed above with reference to **FIG. 3**. For error recovery inquiry messages, two inquiry messages are used, each with a 20 ms timeout (i.e. 20 ms packet timeout and 20 ms inquiry message timeout).

[**0215**] The inquiry message method executed by the network resource **25** is shown in **FIG. 4**. Firstly, a data message is sent **100** to the logical processor **10**. The logical processor **10** is currently executing a recovery procedure as described above. If a response is not received **102** from the logical processor **10** before the expiry of the first timeout period X (see **FIG. 3**), a first inquiry message is sent **104**. As the logical processor **10** is still conducting the error recovery procedure (see **FIG. 3**), the inquiry message is lost. If the network resource **25** does not receive a response by the second timeout period Y (see **FIG. 3**), a second inquiry message is sent **106**. As discussed above, the sum of the two timeout periods X and Y is selected to be longer than the expected recovery period Z for the logical processor **10**. Accordingly, if the failure of the logical processor to respond to the data message is as a result of conducting the error recovery procedure discussed above, the second inquiry message will be received **110** and the original data message will be resent. If however, no response is received after a third timeout period, the failure of the logical processor **10** is deemed to be for another reason, and the error is reported to a SAN administrator function for handling. For example, the SAN administrator function may remove the logical processor as a network resource, or elevate the error status of the resource to a higher level.

[**0216**] Although the present invention has been described in accordance with the embodiments shown, variations to the embodiments would be apparent to those skilled in the art and those variations would be within the scope and spirit of the present invention. Accordingly, it is intended that the specification and embodiments shown be considered as exemplary only, with a true scope of the invention being indicated by the following claims and equivalents. Finally, all patents and patent applications mentioned herein are incorporated by reference herein as if explicitly set forth.

What is claimed is:

1. A method of error recovery in a lockstep computer processing system, the system comprising a primary processor and a secondary processor and a bridge to a network, comprising the steps of:

operating the primary and secondary processors in lockstep;

receiving an error notification resulting from an error in either the primary processor or the secondary processor;

determining if the error is a recoverable error; and

if the error is a recoverable error, then

saving the state of either the primary or the secondary processor to a memory; and

resetting and restarting the primary and secondary processors using the saved state.

2. The method of claim 1 further comprising the steps of:

detecting a divergence in the operation of the primary and secondary processors before receiving the error notification;

waiting for a predetermined time after detecting the divergence; and

if the error notification is received before the expiry of the predetermined time and if the error is determined to be a recoverable error, then treating the error as a recoverable error.

3. The method of claim 2 wherein, if the error notification is received after the expiry of the predetermined time, then treating the error as a non-recoverable error.

4. The method of claim 1 wherein a non-recoverable error on the secondary processor is treated as a recoverable error.

5. The method of claim 1 further comprising the steps of:

if the error is determined to be a non-recoverable error, then

disabling the bridge to the network before data corruption resulting from the error can propagate onto the network.

6. The method of claim 1 wherein a hardware error that results in the loss of a resource that is currently not being used by the primary processor is treated as a recoverable error.

7. The method of claim 1 wherein the error notification reports an error occurring in a hardware resource, and wherein the error notification includes an identifier that can be used to determine whether the hardware resource is critical or non-critical.

8. The method of claim 7 wherein the hardware resource is disabled if the hardware resource is non-critical.

9. The method of claim 8 wherein the hardware resource is retried after processor restart to determine if the error in the hardware resource can be cured by a processor reset.

10. The method of claim 2 wherein the system includes a single main memory, the step of detecting divergence comprises the steps of:

comparing memory commands generated by the primary processor with memory commands generated by the secondary processor;

executing only the memory commands generated by the primary processor; and

signaling a divergence detection if the memory commands issued by the primary processor differ from the memory commands issued by the secondary processor.

11. The method of claim 1 further comprising the steps of:

detecting a divergence in the operation of the primary and secondary processors at the bridge to the network; and

shutting off the bridge to the network immediately unless the error has previously been determined to be a recoverable error.

12. The method of claim 2 wherein the divergence detection is conducted by comparing unique signatures of processor state received from the primary and secondary processors.

13. The method of claim 12 wherein the unique signatures are generated by applying an algorithm to state information for the primary and secondary processors.

14. The method of claim 1 further comprising the steps of:

conducting first and second flushes of cache memory of either the primary or the secondary processor.

15. The method of claim 1 further comprising the steps of:

conducting a high-speed reset and restart of the bridge to the network.

16. The method of claim 15 wherein the bridge to the network has a custom high-speed reset and restart procedure.

17. The method of claim 1 further comprising the steps of:

setting a watchdog timer; and

treating the error as a non-recoverable error if the watchdog timer expires before the resetting of the primary and secondary processors.

18. The method of claim 17 wherein the step of treating the error as a non-recoverable error comprises the step of:

conducting a hard-reset of the lockstep computer processing system.

19. The method of claim 1 wherein the step of restarting the primary and secondary processors using the saved state further includes the step of:

running the bridge to the network from a main memory until a bridge local memory has been initialized.

20. The method of claim 1 wherein the lockstep computer processing system is being utilized by a network resource, the network resource:

sending a data message to the lockstep computer processing system, the data message being lost due to the resetting and restarting of the primary and secondary processors;

sending a first inquiry message to the lockstep computer processing system after a first timeout period, the first inquiry message being lost due to the lockstep computer processing system being unavailable; and

sending a second inquiry message after a second timeout period; wherein the sum of the first and second timeout periods is selected to be greater than an expected recovery time for the lockstep computer processing system.

21. The system of claim 20 wherein the network resource sends out no retries of the data message until a response is received to an inquiry message.

22. A computer system comprising:

a primary processor and a secondary processor being configured to operate in lockstep; and

an error-handling module to receive an error notification resulting from an error in either the primary processor or the secondary processor, to determine if the error is a recoverable error, and, if the error is a recoverable error, then to initiate saving the state of either the primary or the secondary processor to a memory and to reset and restart the primary and secondary processors using the saved state.

23. The system of claim 22 wherein the error-handling module is further configured to receive a notification of a divergence in the operation of the primary and secondary processors before receiving the error notification, the error-handling module being further configured to

wait for a predetermined time after receiving the notification of divergence; and

if the error notification is received before the expiry of the predetermined time and if the error is determined to be a recoverable error, to treat the error as a recoverable error.

24. The system of claim 23 wherein, if the error notification is received after the expiry of the predetermined time, then the error-handling module treats the error as a non-recoverable error.

25. The system of claim 22 wherein a non-recoverable error on the secondary processor is treated as a recoverable error.

26. The system of claim 22 further comprising a bridge to a network, wherein

if the error is determined to be a non-recoverable error, then the system is configured to

disable the bridge to the network before data corruption resulting from the error can propagate onto the network.

27. The system of claim 22 wherein, in use, a hardware error that results in a loss of a resource that is not being used by the primary processor is treated as a recoverable error.

28. The system of claim 22 wherein, in use, the error notification reports an error occurring in a hardware resource, and wherein the error notification includes an identifier that can be used to determine whether the hardware resource is critical or non-critical.

29. The system of claim 28 wherein the system is further configured to disable the hardware resource if the hardware resource is non-critical.

30. The system of claim 28 wherein the system is further configured to retry the hardware resource after processor restart to determine if the error in the hardware resource can be cured by a processor reset.

31. The system of claim 23 further comprising a main memory, the system being configured to detect divergence by:

comparing memory commands generated by the primary processor with memory commands generated by the secondary processor;

executing only the memory commands generated by the primary processor; and

signaling a divergence detection if the memory commands issued by the primary processor differ from the memory commands issued by the secondary processor.

32. The system of claim 22 further comprising:

a bridge to an external network, the computer system being configured to:

detect a divergence in the operation of the primary and secondary processors at the bridge to the network; and

shut off the bridge to the network immediately unless the error has previously been determined to be a recoverable error.

33. The system of claim 23 wherein the error-handling module does divergence detection by comparing unique signatures of processor state received from the primary and secondary processors.

34. The system of claim 32 wherein the unique signatures are generated by applying an algorithm to state information for the primary and secondary processors.

35. The system of claim 22 wherein the reset and restart of the primary and secondary processors includes the step of:

conducting first and second flushes of cache memory of either the primary or the secondary processor.

36. The system of claim 32 wherein the bridge is configured to conduct a high-speed reset and restart during the reset and restart of the primary and secondary processors.

37. The system of claim 36 wherein the bridge to the network has a custom high-speed reset and restart procedure.

38. The system of claim 22 further comprising a watchdog timer, the system treating the error as a non-recoverable error if the watchdog timer expires during the reset and restart of the primary and secondary processors.

39. The system of claim 38 wherein the system conducts a hard-reset of the lockstep computer processing system upon expiry of the watchdog timer.

40. The system of claim 22 further comprising:

a bridge to an external network, the computer system being configured run the bridge to the network from a main memory until a bridge local memory has been initialized upon the reset and restart of the primary and secondary processors.

41. The system of claim 22 further comprising a network bridge associated with the primary and secondary processor and a network resource for utilizing the primary and secondary processor over a network, the network resource being configured to:

send a data message to the network bridge over the network, and, when the data message is lost due to the resetting and restarting of the primary and secondary processors, to:

send a first inquiry message to the network bridge after a first timeout period, and, when the first inquiry message is lost, to:

send a second inquiry message after a second timeout period; wherein the sum of the first and second timeout periods is selected to be greater than an expected recovery time for the primary and secondary processors.

42. The system of claim **41** wherein the network resource sends out no retries of the data message until a response is received to an inquiry message.

* * * * *